Installation, Operation, and Maintenance

IntelliPak™ 1 with Symbio® 800

Commercial Packaged Rooftop Air Conditioners with VAV or SZVAV Controls and eFlex™/eDrive™

⚠ SAFETY WARNING

Only qualified personnel should install and service the equipment. The installation, starting up, and servicing of heating, ventilating, and air-conditioning equipment can be hazardous and requires specific knowledge and training. Improperly installed, adjusted or altered equipment by an unqualified person could result in death or serious injury. When working on the equipment, observe all precautions in the literature and on the tags, stickers, and labels that are attached to the equipment.

September 2022 **RT-SVX072B-EN**

Introduction

Read this manual thoroughly before operating or servicing this unit.

Warnings, Cautions, and Notices

Safety advisories appear throughout this manual as required. Your personal safety and the proper operation of this machine depend upon the strict observance of these precautions.

The three types of advisories are defined as follows:

⚠ WARNING	Indicates a potentially hazardous situation which, if not avoided, could result in death or serious injury.
⚠ CAUTION	Indicates a potentially hazardous situation which, if not avoided, could result in minor or moderate injury. It could also be used to alert against unsafe practices.
NOTICE	Indicates a situation that could result in equipment or property-damage only accidents.

Important Environmental Concerns

Scientific research has shown that certain man-made chemicals can affect the earth's naturally occurring stratospheric ozone layer when released to the atmosphere. In particular, several of the identified chemicals that may affect the ozone layer are refrigerants that contain Chlorine, Fluorine and Carbon (CFCs) and those containing Hydrogen, Chlorine, Fluorine and Carbon (HCFCs). Not all refrigerants containing these compounds have the same potential impact to the environment. Trane advocates the responsible handling of all refrigerants-including industry replacements for CFCs and HCFCs such as saturated or unsaturated HFCs and HCFCs.

Important Responsible Refrigerant Practices

Trane believes that responsible refrigerant practices are important to the environment, our customers, and the air conditioning industry. All technicians who handle refrigerants must be certified according to local rules. For the USA, the Federal Clean Air Act (Section 608) sets forth the requirements for handling, reclaiming, recovering and recycling of certain refrigerants and the equipment that is used in these service procedures. In addition, some states or municipalities may have additional requirements that must also be adhered to for responsible management of refrigerants. Know the applicable laws and follow them.

⚠ WARNING

Proper Field Wiring and Grounding Required!

Failure to follow code could result in death or serious injury.

All field wiring MUST be performed by qualified personnel. Improperly installed and grounded field wiring poses FIRE and ELECTROCUTION hazards. To avoid these hazards, you MUST follow requirements for field wiring installation and grounding as described in NEC and your local/state/national electrical codes.

⚠ WARNING

Personal Protective Equipment (PPE) Required!

Failure to wear proper PPE for the job being undertaken could result in death or serious injury.

Technicians, in order to protect themselves from potential electrical, mechanical, and chemical hazards, MUST follow precautions in this manual and on the tags, stickers, and labels, as well as the instructions below:

- **Before installing/servicing this unit, technicians MUST put on all PPE required for the work being undertaken (Examples; cut resistant gloves/ sleeves, butyl gloves, safety glasses, hard hat/ bump cap, fall protection, electrical PPE and arc flash clothing). ALWAYS refer to appropriate Safety Data Sheets (SDS) and OSHA guidelines for proper PPE.**
- **When working with or around hazardous chemicals, ALWAYS refer to the appropriate SDS and OSHA/GHS (Global Harmonized System of Classification and Labelling of Chemicals) guidelines for information on allowable personal exposure levels, proper respiratory protection and handling instructions.**
- **If there is a risk of energized electrical contact, arc, or flash, technicians MUST put on all PPE in accordance with OSHA, NFPA 70E, or other country-specific requirements for arc flash protection, PRIOR to servicing the unit. NEVER PERFORM ANY SWITCHING, DISCONNECTING, OR VOLTAGE TESTING WITHOUT PROPER ELECTRICAL PPE AND ARC FLASH CLOTHING. ENSURE ELECTRICAL METERS AND EQUIPMENT ARE PROPERLY RATED FOR INTENDED VOLTAGE.**

©2022 Trane

⚠ WARNING

Follow EHS Policies!

Failure to follow instructions below could result in death or serious injury.

- **All Trane personnel must follow the company's Environmental, Health and Safety (EHS) policies when performing work such as hot work, electrical, fall protection, lockout/tagout, refrigerant handling, etc. Where local regulations are more stringent than these policies, those regulations supersede these policies.**
- **Non-Trane personnel should always follow local regulations.**

Overview of Manual

Note: *This document is customer property and must be retained by the unit owner for use by maintenance personnel.*

This unit is equipped with Symbio 800 controls. Refer to the "Start-Up" and "Manual Override" procedures within this Installation, Operation, and Maintenance manual and the latest edition of the appropriate programming manual for Variable Air Volume (VAV), or Single Zone Variable Air Volume (SZVAV) applications before attempting to operate or service this equipment.

Important: *The procedures discussed in this manual should only be performed by qualified and experienced HVAC technicians.*

This booklet describes proper installation, start-up, operation, and maintenance procedures for 20 through 130 ton rooftop air conditioners designed for Single Zone VAV (SZVAV), and Variable Air Volume (VAV) applications. By carefully reviewing the information within this manual and following the instructions, the risk of improper operation and/or component damage will be minimized.

Note: *One copy of the appropriate service literature ships inside the control panel of each unit.*

It is important that periodic maintenance be performed to help assure trouble-free operation. Should equipment failure occur, contact a qualified service organization with qualified, experienced HVAC technicians to properly diagnose and repair this equipment.

Important: *DO NOT release refrigerant to the atmosphere!* If adding or removing refrigerant is required, the service technician must comply with all federal, state, and local laws.

Copyright

This document and the information in it are the property of Trane, and may not be used or reproduced in whole or in part without written permission. Trane reserves the right to revise this publication at any time, and to make changes to its content without obligation to notify any person of such revision or change.

Trademarks

All trademarks referenced in this document are the trademarks of their respective owners.

Factory Training

Factory training is available through Trane University™ to help you learn more about the operation and maintenance of your equipment. To learn about available training opportunities contact Trane University™.

Online: www.trane.com/traneuniversity

Phone: 855-803-3563

Email: traneuniversity@trane.com

Table of Contents

Model Number Description 7
20 to 75 Tons, Air Cooled 7
90 to 130 Tons, Air Cooled 10
General Information 12
Unit Nameplate 12
Compressor Nameplate 12
Gas Heat Nameplate 12
Unit Description 12
Pre-Installation 13
Unit Inspection 13
Exterior Inspection 13
Inspection for Concealed Damage 13
Repair 13
Storage 13
Unit Clearances 13
Unit Dimensions and Weight Information 14
Factory Warranty Information 14
All Unit Installations 14
Additional Requirements for Units Requiring Disassembly 14
Installation Checklist 15
General Checklist (Applies to all units) 15
Main Electrical Power Requirements 15
Field Installed Control Wiring 15
Requirements for Electric Heat Units 15
Requirements for Gas Heat Units 15
Requirements for Hot Water Heat (SLH_) 15
Requirements for Steam Heat (SSH_) 16
O/A Pressure Sensor and Tubing Installation (All units with Statitrac or Return Fans) 16
Requirements for Modulating Reheat 16
Dimensional Data 17
Center of Gravity 24
Electrical Entry Details 25
Minimum Required Clearance 27
Weights 28
Installation 30
Roof Curb and Ductwork 30
Pitch Pocket Location 30
Unit Rigging and Placement 31
General Installation Requirements 32
Rigging the Unit 32
Main Electrical Power 33
Field Installed Control Wiring 33
Electric Heat Units 33
Gas Heat (SFH_) 33
Hot Water Heat (SLH_) 33
Steam Heat (SSH_) 33
O/A Pressure Sensor and Tubing Installation 33
Modulating Reheat (S_H_) 33
Condensate Drain Connections 33
Units with Gas Furnace 34
Removing Supply and Relief/Return Fan Shipping Channels (motors >5 Hp) 34
Spring Isolators 34
Optional DDP Supply Fan Shipping Channel Removal and Isolator Spring Adjustment 34
Shipping Tie Down and Isolator Spring Adjustment 34
O/A Sensor and Tubing Installation 39
Units with Statitrac 39
Gas Heat Units (SFH_) 40
Connecting the Gas Supply Line to the Furnace Gas Train 41
Flue Assembly Installation 45
General Coil Piping and Connection Recommendations 46
Hot Water Heat Units (SLH_) 46
Steam Heat Units 47
Disconnect Switch with External Handle 49
Electric Heat Units (SEH_) 50
Main Unit Power Wiring 51

Electrical Service Sizing 53
Set 1: Cooling Only Rooftop Units and Cooling with Gas Heat or Hydronic Heat Rooftop Units 53
Set 2: Rooftop units with Electric Heat 54
Field Installed Control Wiring 58
Controls using 24 VAC 59
Transformer for Expansion Module 59
Controls using DC Analog Input/ Outputs 59
Variable Air Volume System Controls 60
Discharge Temperature Control Changeover Contacts 60
Remote Zone Sensor (BAYSENS073*) 60
Remote Zone Sensor (BAYSENS074*) 60
Equipment Stop 60
Ventilation Override Mode (VOM) Contacts 60
Emergency Stop Switch. 61
Occupied/Unoccupied Contacts 61
Wall or Duct Mount Humidity Sensor (BAYSENS036* or BAYSENS037*). 61
Unit Replacement 62
Electrical Connection. 62
Main Electrical Power. 63
SEHF Units with 200V or 230V Electric Heat 63
Field-installed Control Wiring 63
Requirements for Gas Heat. 63
Requirements for Hot Water Heat (SLH*). 63
Requirements for Steam Heat (SSH*) 63
Space Pressure Sensor and Tubing Installation 63
Condensate Drain Connections 64
Supply and Return Duct Connections. 64
Installation of New Units 64
Unit Startup 68
Sequence of Operation 68
Stop/Off/Auto 68
Occupancy 68
Performance Data 68
Supply Fan Performance 68
Pressure Drop Tables. 90
Component Static Pressure Drops. 93
Fan Drive Selections 95
Pressure Curves 100
Economizer and Relief Air Damper Adjustment 108
Exhaust Air Dampers 108
Outside Air and Return Air Damper Operation 108
To Adjust the Outside Air Damper Travel 109
Compressor Startup (All Systems) 111
Refrigerant Charging 112
Compressor Crankcase Heaters 113
Compressor Operational Sounds. 113
Electronic Compressor Protection Module (CPM) 113
Electronic Expansion Valves 116
Measuring Superheat 117
Charging by Subcooling 117
Measuring Subcooling 117
Low Ambient Options 117
Operation 117
Standard Ambient Condenser Fans 118
Low Ambient Condenser Fans 118
Electric, Steam and Hot Water Start-Up. 118
(Variable Air Volume Systems) 118
Electric, Steam and Hot Water Start-Up. 119
Gas Furnace Startup 120
Staged, Modulating, and Ultra Modulating 120
Two Stage Gas Furnace 120
Ultra Modulating Gas Furnace 124
Ultra Modulating Burner Setup 124
Final Unit Checkout 127

Trane Startup Checklist 128
Critical Control Parameters and Dry Bulb Changeover Map 131
Service and Maintenance 133
Fan Belt Adjustment 135
Scroll Compressor Replacement 137
Refrigeration System 138
CSHD and CSHN Compressors 139
Electrical Phasing 140
75 Ton eFlex™ Variable Speed Tandem 141
Precision Suction Restrictor 141
VFD Programming Parameters (Supply/Relief) 141
eFlex™ Compressor VFD Programming Parameters 149
Monthly Maintenance 150
Filters 150
Cooling Season 150
Heating Season 151
Coil Cleaning 151
Refrigerant Coils 152
Steam or Hot Water Coils 152
Microchannel Condenser Coil Repair and Replacement 152
Fall Restraint 153
Final Process 153
Unit Wiring Diagram Numbers 155
Warranty and Liability Clause 157
COMMERCIAL EQUIPMENT - 20 TONS AND LARGER AND RELATED ACCESSORIES 157

Model Number Description

20 to 75 Tons, Air Cooled

Digit 1 — Unit Type

S = Self-Contained (Packaged Rooftop)

Digit 2 — Unit Function

A = DX Cooling, No Heat
E = DX Cooling, Electric Heat
F = DX Cooling, Natural Gas Heat
L = DX Cooling, Hot Water Heat
S = DX Cooling, Steam Heat
X = DX Cooling, No Heat, Extended Casing

Digit 3 — System Type

H = Single Zone

Digit 4 — Development Sequence

M = Sixth

Digit 5, 6, 7 — Nominal Capacity

***20** = 20 Ton Air Cooled
***25** = 25 Ton Air Cooled
***30** = 30 Ton Air Cooled
***40** = 40 Ton Air Cooled
***50** = 50 Ton Air Cooled
***55** = 55 Ton Air Cooled
***60** = 60 Ton Air Cooled
***70** = 70 Ton Air Cooled
***75** = 75 Ton Air Cooled

Digit 8 — Voltage Selection

4 = 460/60/3 XL
5 = 575/60/3 XL
C = 380/50/3 XL
D = 415/50/3 XL
E = 200/60/3 XL
F = 230/60/3 XL

Note: *SEH units (units with electric heat) utilizing 200V or 230V require dual power source.*

Digit 9 — Heating Capacity

Note: *When the second digit is "F" (Gas Heat), the following applies: (M and T are available ONLY on 50 ton and above).*

H = High Heat — 2-Stage
K = Low Heat — Ultra Modulating
L = Low Heat — 2-Stage
M = Low Heat — Modulating
0 = No Heat
P = High Heat — Modulating
T = High Heat — Ultra Modulating

Note: *When the second digit is "E" (Electric Heat), the following applies:*

D = 30 kW
H = 50 kW
L = 70 kW
N = 90 kW
Q = 110 kW
R = 130 kW
U = 150 kW
V = 170 kW
W = 190 kW

Note: *When the second digit is "L" (Hot Water) or "S" (Steam) Heat, one of the following valve size values must be in Digit 9:*

High Heat Coil
1 = 0.50 inch
2 = 0.75 inch
3 = 1.00 inch
4 = 1.25 inches
5 = 1.50 inches
6 = 2.00 inches

Low Heat Coil
A = 0.50 inch
B = 0.75 inch
C = 1.00 inch
D = 1.25 inches
E = 1.50 inches
F = 2.00 inches

Digit 10 — Design Sequence

* = Current

Note: *Sequence may be any letter A through Z, or any digit 1 through 9.*

Digit 11— Relief/Return Option

0 = None
1 = Barometric
3 = Relief 3 HP with Statitrac
4 = Relief 5 HP with Statitrac
5 = Relief 7.5 HP with Statitrac
6 = Relief 10 HP with Statitrac
7 = Relief 15 HP with Statitrac
8 = Relief 20 HP with Statitrac
9 = Return 3 HP with Statitrac
M = Return 5 HP with Statitrac
N = Return 7.5 HP with Statitrac
P = Return 10 HP with Statitrac
R = Return 15 HP with Statitrac
T = Return 20 HP with Statitrac

Digit 12— Relief/Return Air Fan Drive

(Relief/Return Fan)
0 = None
4 = 400 RPM
5 = 500 RPM
6 = 600 RPM
7 = 700 RPM
8 = 800 RPM
9 = 900 RPM
A = 1000 RPM
B = 1100 RPM
(Return Fan Only)
C = 1200 RPM
D = 1300 RPM
E = 1400 RPM
F = 1500 RPM
G = 1600 RPM
H = 1700 RPM
J = 1800 RPM
K = 1900 RPM

Digit 13 — Filter (Pre DX/Final)

A = Throwaway
B = Cleanable Wire Mesh
C = High Efficiency Throwaway
D = Bag with Prefilter
E = Cartridge with Prefilter
F = Throwaway Filter Rack (Filter not included)
G = Bag Filter Rack (Filter Not Included)
H = Standard Throwaway Filter/Cartridge Final Filters
J = High Efficiency Throwaway Filter/Cartridge Final Filters

Model Number Description

Digit 13 — Filter (Pre DX/Final) (continued)

K = Bag Filters with 2–inch Throwaway Prefilters/ Cartridge Final Filters
L = Cartridge Filters with 2–inch Throwaway Prefilters /Cartridge Final Filters
M = Standard Throwaway Filter/Cartridge Final Filters with 2"Throwaway Prefilters
N = High Efficiency Throwaway Filters/Cartridge Final Filters with 2"Throwaway Prefilters
P = Bag Filters with Prefilters/Cartridge Final Filters with 2–inch Throwaway Prefilters
Q = Cartridge Filters with Prefilters/Cartridge Final Filters with 2–inch Throwaway Prefilters
R = High Efficiency Throwaway/Final filter rack (no filters)
T = 2 inch and 1 inch Vertical Filter Rack (no filters) /Final Filter Rack (no filters)

Digit 14 — Supply Air Fan HP

1 = 3 HP FC
2 = 5 HP FC
3 = 7.5 HP FC
4 = 10 HP FC
5 = 15 HP FC
6 = 20 HP FC
7 = 25 HP FC
8 = 30 HP FC
9 = 40 HP FC
A = 50 HP FC
B = 3 HP DDP 80W
C = 3 HP DDP 120W
D = 5 HP DDP 80W
E = 5 HP DDP 120W
F = 7.5 HP DDP 80W
G = 7.5 HP DDP 120W
H = 10 HP DDP 80W (60-75T = 2 x 5 HP)
J = 10 HP DDP 100 or 120W (60-75T = 2 x 5 HP)
K = 15 HP DDP 80W (60-75T = 2 x 7.5 HP)
L = 15 HP DDP 100 or 120W (60-75T = 2 x 7.5 HP)
M = 20 HP DDP 80W (60-75T = 2 x 10 HP)
N = 20 HP DDP 100 or 120W (60-75T = 2 x 10 HP)
P = 25 HP DDP 80W
R = 25 HP DDP 120W
T = 30 HP DDP 80W (60-75T = 2 x 15 HP)
U = 30 HP DDP 120W (60-75T = 2 x 15 HP)
V = 40 HP DDP 80W(60-75T = 2 x 20 HP)
W = 40 HP DDP 100 or 120W (60-75T = 2 x 20 HP)
X = 50 HP DDP 80W (70-75T = 2 x 25 HP)
Y = 50 HP DDP 100 or 120W (70–75T = 2 x 25 HP)
Z = 30 HP DDP 100W (60-75T = 2 x 15 HP)

Digit 15 — Supply Air Fan RPM

4 = 400 RPM
5 = 500 RPM
6 = 600 RPM
7 = 700 RPM
8 = 800 RPM
9 = 900 RPM
A = 1000 RPM
B = 1100 RPM
C = 1200 RPM
D = 1300 RPM
E = 1400 RPM
F = 1500 RPM
G = 1600 RPM
H = 1700 RPM
J = 1800 RPM
K = 1900 RPM
L = 2000 RPM
M = 2100 RPM
N = 2200 RPM
P = 2300 RPM
R = 2400 RPM

Digit 16 — Outside Air

A = No Fresh Air
B = 0-25% Manual
D = 0-100% Economizer
E = 0-100% Economizer with Traq/DCV
F = 0-100% Economizer with DCV

Note: *Must install CO_2 sensor(s) for DCV to function properly.*

Digit 17 — System Control

6 = VAV Discharge Temp Control with VFD without Bypass
7 = VAV Discharge Temp Control with VFD and Bypass
8 = VAV Discharge Temp Control Supply and Relief/Return Fan with VFD without Bypass
9 = VAV Discharge Temp Control Supply and Relief/Return Fan with VFD and Bypass
A = VAV - Single Zone VAV - with VFD without Bypass
B = VAV - Single Zone VAV - with VFD and Bypass
C = VAV - Single Zone VAV - Supply and Relief/ Return Fan with VFD without Bypass
D = VAV - Single Zone VAV - Supply and Relief/ Return Fan with VFD with Bypass

Digit 18 — Zone Sensor

0 = None
A = Dual Setpoint Manual or Auto Changeover (BAYSENS108*)
C = Room Sensor w/ Override/Cancel Buttons (BAYSENS073*)
D = Room Sensor w/ Temp Adjustment/Override/ Cancel Buttons (BAYSENS074*)
L = Programmable Zone Sensor w/ System Function Modes for SZVAV/VAV (BAYSENS800*)

Note: **Asterisk indicates current model number digit. These sensors can be ordered to ship with the unit.*

Digit 19 — Ambient Control

0 = Standard
1 = 0° Fahrenheit

Digit 20 — Agency Approval

0 = None (cULus Gas Heater, see note)
1 = cULus

Note: *Includes cULus classified gas heating section only when second digit is a "F."*

Digit 21 — Miscellaneous Options

0 = Unit Mounted Terminal Block
A = Unit Mounted Disconnect Switch
B = Unit Mounted Disconnect Switch with High Fault SCCR
D = Unit Mounted Disconnect Switch with Convenience Outlet
E = Unit Mounted Disconnect Switch with High Fault SCCR and Convenience Outlet

Digit 22 — Refrigeration Options

0 = Without Hot Gas Bypass
B = Hot Gas Bypass
C = Hot Gas Reheat without Hot Gas Bypass
D = Hot Gas Reheat and Hot Gas Bypass

Digit 23 — Economizer Control Options

O = Without Economizer
C = Economizer Control with Comparative Enthalpy
D = Economizer with Differential Dry Bulb
Z = Economizer Control with Reference Enthalpy
W = Economizer Control with Dry Bulb

Digit 24 — Damper Options

E = Low Leak Economizer Dampers
U = Ultra Low Leak Economizer Dampers and Ultra Low Leak motorized relief dampers when relief/ return option includes motorized dampers

Digit 25 — Power Meter

0 = None
P = Power Meter

Digit 26 — Efficiency Options

0 = Standard Efficiency Unit
H = High Efficiency Unit
V = eFlex™ Variable Speed Compressor

Digit 27 — Condenser Options

0 = Standard Aluminum Condenser Coil
J = Corrosion Protected Condenser Coil

Digit 28 — Rapid Restart

0 = Standard Restart
R = Rapid Restart

Digit 29 — Miscellaneous Options

0 = Motors without Internal Shaft Grounding
A = Motors with Internal Shaft Grounding

Digit 30 — Expansion Module

0 = None
E = Expansion Module

Digit 31 — Miscellaneous Options

N = Ventilation Override Module

Digit 32 — Service Options

0 = None
R = Extended Grease Lines
3 = Stainless Steel Sloped Drain Pan
4 = Stainless Steel Sloped Drain Pan with Grease Lines

Digit 33 — Cabinet Options

0 = Standard Panels
1 = Standard Panels with Double Wall
T = Hinged Access Doors
2 = Hinged Access Doors with Double Wall
U = IRU - with Standard Panels
3 = IRU - with Standard Panels with Double Wall
W = IRU - with Hinged Access Doors
4 = IRU - with Hinged Access Doors with Double Wall
Y = IRU with SST - with Standard Panels
5 = IRU with SST - with Standard Panels with Double Wall
Z = IRU with SST - with Hinged Access Doors
6 = IRU with SST - with Hinged Access Doors with Double Wall

Digit 34 — Filter Monitor

0 = None
1 = Pre-Evaporator
2 = Pre-Evaporator and Final Filter

Digit 35 — BAS/Communication Options

0 = None
7 = Trane LonTalk Communication Interface Module
8 = Modbus®
M = BACNet® Communications Interface
W = Air-Fi® Wireless

Digit 36 — Isolators

8 = Spring Isolators

Digit 37 —Airflow

A = Downflow Supply/Upflow Return
B = Horizontal Right Supply/ Horizontal End Return
C = Horizontal Right Supply/Upflow Return
E = Downflow Supply/Horizontal End Return

Digit 38 — Miscellaneous Options

A = Supply Fan Piezometer
B = Supply Isolation damper
C = Return Isolation damper
D = Both Supply and Return Isolation damper
E = Piezometer with Supply Isolation damper
F = Piezometer with Return Isolation damper
G = Piezometer with both Supply and Return Isolation damper

90 to 130 Tons, Air Cooled

Digit 1 — Unit Type

S = Self-Contained (Packaged Rooftop)

Digit 2 — Unit Function

E = DX Cooling, Electric Heat
F = DX Cooling, Natural Gas Heat
L = DX Cooling, Hot Water Heat
S = DX Cooling, Steam Heat
X = DX Cooling, No Heat, Extended Casing

Digit 3 — System Type

H = Single Zone

Digit 4 — Development Sequence

L = R-410A Development Sequence

Digit 5, 6, 7 — Nominal Capacity

***90** = 90 Ton Air Cooled
***11** = 105 Ton Air Cooled
***12** = 115 Ton Air Cooled
***13** = 130 Ton Air Cooled

Digit 8 — Power Supply

4 = 460/60/3 XL
5 = 575/60/3 XL

Digit 9 — Heating Capacity

Note: *When Digit 2 is "F" (Gas Heat), the following values apply in Digit 9:*

H = High Heat – 2-stage
O = No Heat
P = High Heat — Modulation
T = High Heat—Ultra Modulation

Note: *When the second digit calls for "E" (electric heat), the following values apply in Digit 9:*

W = 190 kW

Note: *When the second digit calls for "L" (hot water) or "S" (steam) heat, one of the following valve size values must be in Digit 9:*

High Heat Coil: 3 = 1", 4 = 1.25", 5 = 1.5", 6 = 2", 7 = 2.5"

Low Heat Coil: C = 1", D = 1.25", E = 1.5", F = 2", G = 2.5"

Digit 10 — Design Sequence

***** = Current

Note: *Sequence may be any letter A through Z, or any digit 1 through 9.*

Digit 11 — Relief Option

0 = None
7 = 100% Relief 15 HP with Statitrac
8 = 100% Relief 20 HP with Statitrac
9 = 100% Relief 25 HP with Statitrac
H = 100% Relief 30 HP with Statitrac
J = 100% Relief 40 HP with Statitrac

Digit 12 — Relief Fan

(Relief Fan)
0 = None
5 = 500 RPM
6 = 600 RPM
7 = 700 RPM
8 = 800 RPM

Digit 13 — Filter (Pre DX/Final)

A = Throwaway
C = High Efficiency Throwaway
D = Bag with Prefilter
E = Cartridge with Prefilter
F = Throwaway Filter Rack (filter not included)
G = Bag Filter Rack (Filter Not Included)
H = StandardThrowaway Filter/Cartridge Final Filters
J = High Efficiency Throwaway Filter/Cartridge Final Filters
K = Bag Filters with 2"Throwaway Prefilters/ Cartridge Final Filters
L = Cartridge Filters with 2"Throwaway Prefilters /Cartridge Final Filters
M = StandardThrowaway Filter/Cartridge Final Filters with 2–inch Throwaway Prefilters
N = High EfficiencyThrowaway Filters/Cartridge Final Filters with 2–inch Throwaway Prefilters
P = Bag Filters with Prefilters Cartridge Final Filters with 2–inch Throwaway Prefilters
Q = Cartridge Filters with Prefilters/Cartridge Final Filters with 2–inch Throwaway Prefilters

Digit 14 — Supply Air Fan HP

C = 30 HP (2x15 HP)
D = 40 HP (2x20 HP)
E = 50 HP (2x25 HP)
F = 60 HP (2x30 HP)
G = 80 HP (2x40 HP)

Digit 15 — Supply Air Fan Drive

A = 1000 RPM
B = 1100 RPM
C = 1200 RPM
D = 1300 RPM
E = 1400 RPM
F = 1500 RPM
G = 1600 RPM

Digit 16 — Outside Air

D = 0-100% Economizer (Std.)
E = 0-100% Economizer with Traq with DCV
F = 0-100% Economizer with DCV

Note: *Must install CO_2 sensor(s) for DCV to function properly.*

Digit 17 — System Control

6 = VAV Discharge Temperature Control with VFD without Bypass
7 = VAV Discharge Temperature Control with VFD and Bypass
8 = VAV Discharge Temperature Control Supply and ReliefFan with VFD without Bypass
9 = VAV Discharge Temperature Control Supply and Relief Fan with VFD and Bypass
A = VAV – Single Zone VAV – with VFD without Bypass
B = VAV – Single Zone VAV – with VFD with Bypass
C = VAV – Single Zone VAV – Supply and Relief/ Return Fan with VFD without Bypass
D = VAV – Single Zone VAV – Supply and Relief/ Return Fan with VFD with Bypass

Digit 18 — Zone Sensor

0 = None
A = Dual Setpoint Manual or Auto Changeover (BAYSENS108*)
C = Room Sensor with Override and Cancel Buttons (BAYSENS073*)
D = Room Sensor with Temperature Adjustment and Override and Cancel Buttons (BAYSENS074*)
L = Programmable Zone Sensor with System Function Modes for VAV (BAYSENS800*)

Note: **Asterisk indicates current model number digit A, B, C, etc. These sensors can be ordered to ship with the unit.*

Digit 19 — Ambient Control

0 = Standard
1 = 0° Fahrenheit

Digit 20 — Agency Approval

0 = None (cULus Gas Heater, see note)
1 = cULus

Note: *Includes cULus classified gas heating section only when second digit of Model No. is a "F."*

Digit 21 — Miscellaneous

0 = Unit Mounted Terminal Block
A = Unit Mounted Disconnect Switch
B = Unit Mounted Disconnect Switch with High Fault SCCR
D = Unit Mounted Disconnect Switch with Convenience Outlet
E = Unit Mounted Disconnect Switch with High Fault SCCR and Convenience Outlet

Digit 22 — Refrigeration Options

0 = Without Hot Gas Bypass
B = Hot Gas Bypass

Digit 23 — Economizer Control Options

C = Economizer Control with Comparative Enthalpy
D = Economizer with Differential Dry Bulb
Z = Economizer Control with Reference Enthalpy
W = Economizer Control with Dry Bulb

Digit 24 — Damper Options

0 = Standard Dampers
E = Low Leak Economizer Dampers
U = Ultra Low Leak Economizer Dampers and Ultra Low Leak motorized relief dampers

Digit 25 — Power Meter

0 = None
1 = Power Meter

Digit 26 — Efficiency Options

0 = Standard Efficiency Unit
H = High Efficiency Unit

Digit 27 — Condenser Coil Options

0 = Air Cooled Aluminum Condenser Coil
J = Corrosion-Protected Condenser Coil

Digit 28 — Rapid Restart

0 = Non-Rapid Restart
R = Rapid Restart

Digit 29 — Miscellaneous

0 = Motors without Internal Shaft Grounding
A = Motors with Internal Shaft Grounding

Digit 30 — Expansion Module

0 = None
E = Expansion Module

Digit 31 — Miscellaneous

N = Ventilation Override Module

Digit 32 — Service Options

0 = None
R = Extended Grease Lines
3 = Stainless Steel Sloped Drain Pan
4 = Stainless Steel Sloped Drain Pan with Grease Lines

Digit 33 — Cabinet Options

0 = Standard Panels
1 = Standard Panels with Double Wall
T = Hinged Access Doors
2 = Hinged Access Doors with Double Wall
U = IRU - with Standard Panels
3 = IRU - with Standard Panels with Double Wall
W = IRU - with Hinged Access Doors
4 = IRU - with Hinged Access Doors with Double Wall
Y = IRU with SST - with Standard Panels
5 = IRU with SST - with Standard Panels with Double Wall
Z = IRU with SST - with Hinged Access Doors
6 = IRU with SST - with Hinged Access Doors with Double Wall

Digit 34 — Filter Monitor

0 = None
1 = Pre-Evaporator
2 = Pre-Evaporator and Final Filter

Digit 35 — BAS/Communication Options

0 = None
7 = Trane LonTalk Communication Interface Module
8 = ModBus®
M = BACnet® Communication Interface (BCI) Module
W = Air-Fi® Wireless

Digit 36 — Isolators

8 = Spring Isolators

Digit 37 —Airflow

A = Downflow Supply/Upflow Return
B = Horizontal Right Supply/ Horizontal End Return
C = Horizontal Right Supply/Upflow Return
E = Downflow Supply/Horizontal End Return

General Information

Unit Nameplate

One Mylar unit nameplate is located on the outside of enclosure. It includes the unit model number, serial number, electrical characteristics, weight, refrigerant charge, unit wiring diagram numbers, as well as other pertinent unit data. A small metal nameplate with the Model Number, Serial Number, and Unit Weight is located just above the Mylar nameplate, and a third nameplate is located on the inside of the control panel door.

Compressor Nameplate

The Nameplate for the Scroll Compressor is located on the compressor lower housing. Max amps is listed on the nameplate and is the absolute highest amp load on the compressor at any operating condition (does not include locked rotor amps or inrush). This value should never be exceeded.

Gas Heat Nameplate

The nameplate for the Gas Heater is located on the inside of the gas heat enclosure. Allowable operating values of Min and Max input rate, manifold pressure, and air rise for the heater is listed on the nameplate.

Unit Description

Each single-zone rooftop air conditioner ships fully assembled and charged with the proper refrigerant quantity from the factory. An optional roof curb, specifically designed for the S_HL units is available from Trane. The roof curb kit must be field assembled and installed according to the latest edition of the roof curb installation manual.

Trane Commercial Rooftop Units are controlled by a Symbio 800 control system that consists of a network of modules and are referred to as Low Level Intelligent Devices (LLID). The acronym (LLID) is used extensively throughout this document when referring to the control system network. These modules through Proportional/ Integral control algorithms perform specific unit functions which provide the best possible comfort level for the customer.

They are mounted in the control panel and are factory wired to their respective internal components. They receive and interpret information from other unit modules, sensors, remote panels, and customer binary contacts to satisfy the applicable request for economizing, mechanical cooling, heating, and ventilation. Refer to the following discussion for an explanation of each module function.

Note: *The Symbio™ 800 coin cell tray should never be taken out unless the Symbio 800 is powered on or the Symbio 800 needs to be powered on shortly after replacing the battery. Failure to do this may shorten the battery life.*

Pre-Installation

Unit Inspection

To protect against loss due to damage incurred in transit, perform inspection immediately upon receipt of the unit.

Exterior Inspection

If the job site inspection reveals damage or material shortages, file a claim with the carrier immediately. Specify the type and extent of the damage on the bill of lading before signing. Notify the appropriate sales representative.

Important: *Do not proceed with installation of a damaged unit without sales representative's approval.*

- Visually inspect the complete exterior for signs of shipping damages to unit or packing material.
- Verify that the nameplate data matches the sales order and bill of lading.
- Verify that the unit is properly equipped and there are no material shortages.
- Verify that the power supply complies with the unit nameplate and electric heater specifications.

Inspection for Concealed Damage

Visually inspect the components for concealed damage as soon as possible after delivery and before it is stored.

Do NOT walk on the sheet metal base pans. Bridging between the unit's main supports may consist of multiple 2 by 12 boards or sheet metal grating.

⚠ WARNING

No Step Surface!

Failure to follow instruction below could result in death or serious injury.

Do not walk on the sheet metal drain pan. Walking on the drain pan could cause the supporting metal to collapse and result in the operator/technician falling.

If concealed damage is discovered:

- Notify the carrier's terminal of the damage immediately by phone and by mail.
- Concealed damage must be reported within 15 days.
- Request an immediate, joint inspection of the damage with the carrier and consignee.
- Stop unpacking the unit.
- Do not remove damaged material from receiving location.
- Take photos of the damage, if possible.
- The owner must provide reasonable evidence that the damage did not occur after delivery.

Repair

Notify the appropriate sales representative before arranging unit installation or repair.

Important: *Do not repair unit until the damage has been inspected by the carrier's representative.*

Storage

Store unit in a level and dry location. Use adequate blocking under the base rail. If unit is not level and supported adequately, damage may occur when removing screws and opening doors.

Take precautions to prevent condensate formation inside the unit electrical components and motors when:

- The unit is stored before it is installed; or,
- The unit is set on the roof curb and temporary auxiliary heat is provided in the building.

Isolate all side panel service entrances and base pan openings (e.g., conduit holes, S/A and R/A openings, and flue openings) to minimize ambient air from entering the unit until it is ready for startup.

Note: *Do not use the unit heater as temporary heat without completing the startup procedures detailed under Startup information.*

The manufacturer will not assume responsibility for equipment damage resulting from accumulation of condensate on the unit electrical and/or mechanical components.

Unit Clearances

Minimum Required Clearance (see Dimensional Data chapter) illustrates the minimum operating and service clearances for either a single or multiple unit installation.

These clearances are the minimum distances necessary for adequate service, cataloged unit capacity, and peak operating efficiency. Providing less than the recommended clearances may result in condenser coil starvation, "short-circulating" of relief and economizer airflows, or recirculation of hot condenser air.

Unit Dimensions and Weight Information

Table 1. Unit dimensions and weight information

Description	Reference
Air-Cooled Condenser	
Unit dimensions, 20–75 ton (SAH_)	Figure 2, p. 18, Figure 3, p. 19, Figure 4, p. 20, Figure 5, p. 21
Unit dimensions, 90–130 ton	Figure 6, p. 23
Roof curb weights	
Center-of-gravity illustration and related dimensional data	Figure 7, p. 24

Factory Warranty Information

Compliance with the following is required to preserve the factory warranty:

All Unit Installations

Startup MUST be performed by Trane, or an authorized agent of Trane, to VALIDATE this WARRANTY. Contractor must provide a two-week startup notification and true start date to Trane (or an agent of Trane specifically authorized to perform startup).

On all IntelliPak 1 units, a Trane factory startup is an option and provides maximized unit reliability and overall unit performance in addition to preserving the standard factory warranty.

Additional Requirements for Units Requiring Disassembly

When a new fully assembled IntelliPak is shipped and received from our Trane manufacturing location, and, for any reason, it requires disassembly or partial disassembly, which could include but is not limited to the evaporator, condenser, control panel, compressor/motor, factory mounted starter, or any other components originally attached to the fully assembled unit, compliance with the following is required to preserve the factory warranty:

- Trane, or an agent of Trane specifically authorized to perform start-up and warranty of Trane® products, will perform or have direct on-site technical supervision of the disassembly and reassembly work.
- The installing contractor must notify Trane, or an agent of Trane specifically authorized to perform start-up and warranty of Trane® products, two weeks in advance of the scheduled disassembly work to coordinate the disassembly and reassembly work.
- Start-up must be performed by Trane or an agent of Trane specifically authorized to perform start-up and warranty of Trane® products.

Trane, or an agent of Trane specifically authorized to perform startup and warranty of Trane® products, will provide qualified personnel and standard hand tools to perform the disassembly work at a location specified by the contractor. The contractor shall provide the rigging equipment, such as chain falls, gantries, cranes, forklifts, etc., necessary for the disassembly and reassembly work and the required qualified personnel to operate the necessary rigging equipment. See “Warranty and Liability Clause,” p. 157 for additional details.

Installation Checklist

General Checklist (Applies to all units)

The checklist listed below is a summary of the steps required to successfully install a Commercial rooftop unit. This checklist is intended to acquaint the installing personnel with what is required in the installation process. It does not replace the detailed instructions called out in the applicable sections of this manual.

Important: *This checklist does not replace the detailed instructions called out in the applicable sections of this manual.*

- ☐ Check the unit for shipping damage and material shortage; file a freight claim and notify Trane office.
- ☐ Verify that the installation location of the unit will provide the required clearance for proper operation.
- ☐ Assemble and install the roof curb per the current edition of the curb installation guide.
- ☐ Fabricate and install ductwork; secure ductwork to curb.
- ☐ Install pitch pocket for power supply through building roof. (If applicable)
- ☐ Rigging the unit.
- ☐ Set the unit onto the curb; check for levelness.
- ☐ Ensure unit-to-curb seal is tight and without buckles or cracks.
- ☐ Install and connect condensate drain lines to each evaporator drain connection.
- ☐ Remove the shipping hold-down bolts and shipping channels from the supply and relief/return fans ordered with rubber or spring isolators.
- ☐ Check all optional supply and relief/return fan spring isolators for proper adjustment.
- ☐ Verify all discharge line service valves (one per circuit) are back seated.

Main Electrical Power Requirements

- ☐ Verify that the power supply to the unit complies with the unit nameplate specification. Refer to Main Unit Power Wiring in the Installation chapter.
- ☐ Properly ground the unit.
- ☐ Inspect all control panel components and tighten any loose connections.
- ☐ Connect properly sized and protected power supply wiring to a field supplied/installed disconnect and the unit (copper wiring only to the unit).
- ☐ Verify that phasing to the unit is correct (ABC).
- ☐ Turn the 1S1 fused switch inside the control panel off to prevent accidental unit operation. (20-75T units only).
- ☐ Turn the 1S1 and 1S20 fused switches inside the control panel off to prevent accidental unit operation. (90-130T units only).
- ☐ Turn on power to the unit.
- ☐ Press the STOP button on the User Interface (2P1).
- ☐ Allow compressor crankcase heaters to operate for 8 hours prior to starting the refrigeration system.

Important: *Note: All field-installed wiring must comply with NEC and applicable local codes.*

Field Installed Control Wiring

- ☐ Complete the field wiring connections for the variable air volume controls as applicable. Refer to unit diagrams for guidelines.

Important: *Note: All field-installed wiring must comply with NEC and applicable local codes.*

Requirements for Electric Heat Units

SEH_ Units (460–575V)

- ☐ Verify that the power supply complies with the electric heater specifications on the unit and heater nameplate.
- ☐ Inspect the heater junction box and control panel; tighten any loose connections.
- ☐ Check electric heat circuits for continuity.

SEH_ Units with 200V or 230V Electric Heat: (Requires Separate Power Supply to Heater)

- ☐ Connect properly sized and protected power supply wiring for the electric heat from a dedicated, field-supplied/installed disconnect to terminal block 3XD5, or to an optional unit-mounted disconnect switch 3QB4.

Requirements for Gas Heat Units

- ☐ Gas supply line properly sized and connected to the unit gas train.
- ☐ All gas piping joints properly sealed.
- ☐ Drip leg installed in the gas piping near the unit.
- ☐ Gas piping leak checked with a soap solution. If piping connections to the unit are complete, do not pressurize piping in excess of 0.50 psig or 14" W.C. to prevent component failure.
- ☐ Main supply gas pressure adequate.
- ☐ Flue Tubes clear of any obstructions.
- ☐ Factory-supplied flue assembly installed on the unit.
- ☐ Connect the 3/4" CPVC furnace drain stub-out to a proper condensate drain.

Requirements for Hot Water Heat (SLH_)

- ☐ Route properly sized water piping through the base of the unit into the heating section.
- ☐ Install the factory-supplied, 3-way modulating valve.
- ☐ Complete the valve actuator wiring.

Requirements for Steam Heat (SSH_)

- ☐ Install an automatic air vent at the top of the return water coil header.
- ☐ Route properly sized steam piping through the base of the unit into the heating section.
- ☐ Install the factory-supplied, 2-way modulating valve.
- ☐ Complete the valve actuator wiring.
- ☐ Install 1/2", 15-degree swing check vacuum breaker(s) at the top of each coil section. Vent breaker(s) to the atmosphere or merge with return main at discharge side of steam trap.
- ☐ Position the steam trap discharge at least 12" below the outlet connection on the coil.
- ☐ Use float and thermostatic traps in the system, as required by the application.

O/A Pressure Sensor and Tubing Installation (All units with Statitrac or Return Fans)

- ☐ O/A pressure sensor mounted to the roof bracket.
- ☐ Factory supplied pneumatic tubing installed between the O/A pressure sensor and the connector on the vertical support.
- ☐ (Units with StatiTrac) Field supplied pneumatic tubing connected to the proper fitting on the space pressure transducer located in the filter section, and the other end routed to a suitable sensing location within the controlled space.

Requirements for Modulating Reheat

- ☐ Install space humidity and temperature sensors. Refer to unit diagrams for guidelines.

Dimensional Data

Figure 1. Heating/cooling unit dimensions - 20 to 75 tons air-cooled

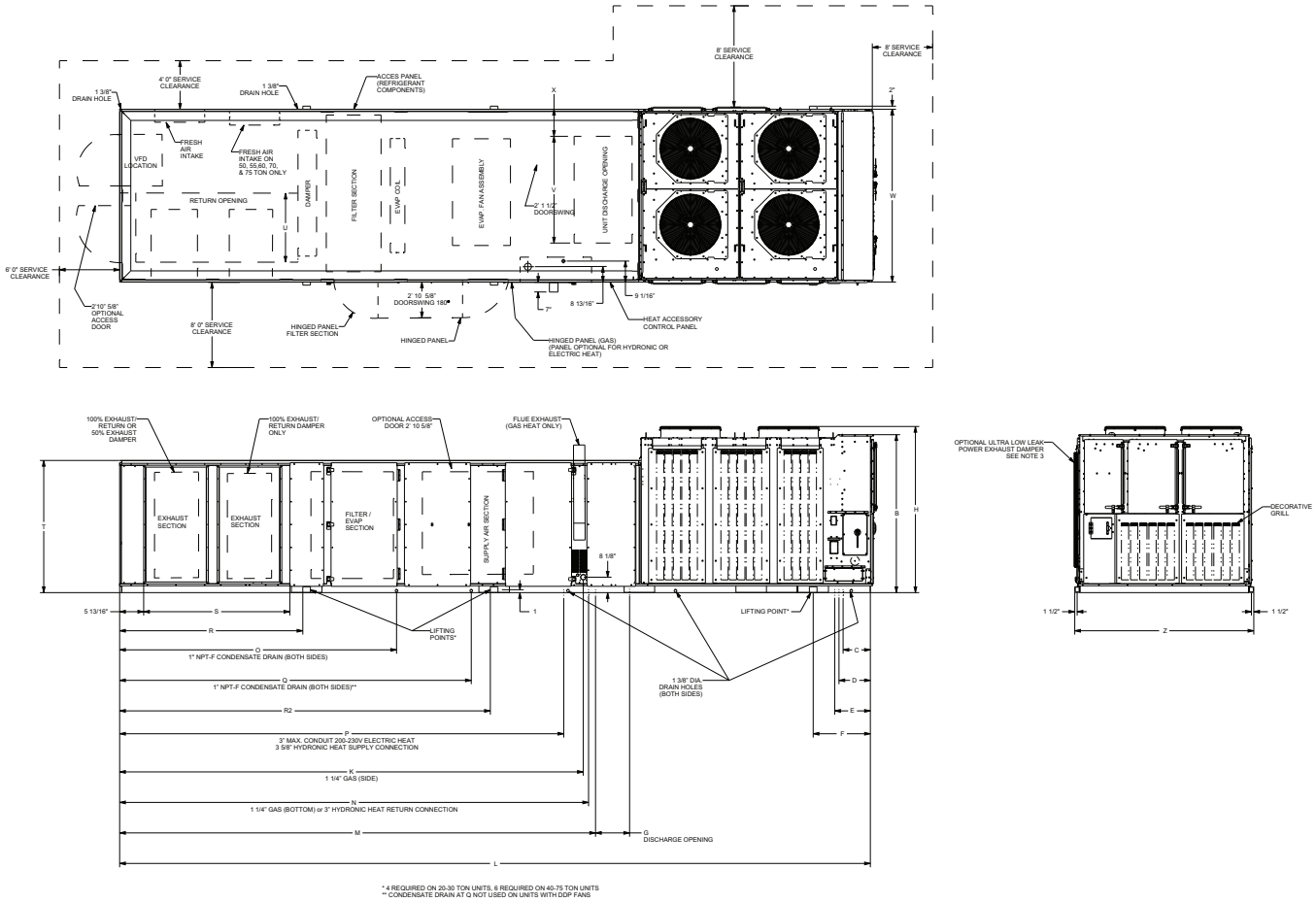

Table 2. Heating/cooling unit dimensions (ft. in.) - air-cooled - SEH_, SFH_, SSH_, SLH_, SXH_

Nom. Tons	H	L	W	B	C	D	E	F	G
20, 25	7-3	24-1 3/8	7-6 1/2	6-9	0-9 1/2	1-3 5/8	1-7 9/16	1-3 1/2	2-2 1/2
30	7-3	24-1 3/8	7-6 1/2	6-9	0-9 1/2	1-3 5/8	1-7 9/16	1-3 1/2	2-2 1/2
40	7-3	32-10 1/2	7-6 1/2	6-9	0-9 7/8	1-5 7/8	1-10 1/8	2-5	2-5
50, 55	7-3	32-10 1/2	7-6 1/2	6-9	0-9 7/8	1-5 7/8	1-10 1/8	2-5	2-5
60	7-3 1/4	32-10 1/2	9-8	6-9	0-9 7/8	1-5 7/8	1-10 1/8	2-5	2-5
70, 75	7-3 1/4	32-10 1/2	9-8	6-9	0-9 7/8	1-5 7/8	1-10 1/8	2-5	2-5

Nom. Tons	J	K	M	N	O	P	Q	R	R2
20, 25	16-9 3/4	16-6	16-3 13/16	16-7	10-7	15-5 5/16	13-3	7-0	N/A
	16-9 3/4	16-6							
30	16-9 3/4	16-6	16-3 13/16	16-7	10-7	18-11 11/16	15-4 15/16	8-0	N/A
	16-9 3/4	16-6							
40	20-1 3/4	19-6	19-10 5/16	19-7	12-1	18-11 11/16	15-4 15/16	8-0	16-2 5/16
	20-6 3/4	20-3							
50, 55	20-1 3/4	19-6	19-10 5/16	19-7	12-1	15-5 5/16	13-3	7-0	16-2 5/16
	20-6 3/4	20-3							
60	20-1 3/4	19-6	19-10 5/16	19-7	12-1	18-11 11/16	15-4 15/16	8-0	16-2 5/16
	20-6 3/4	20-3							
70, 75	20-1 3/4	19-6	19-10 5/16	19-7	12-1	18-11 11/16	15-4 15/16	8-0	16-2 5/16
	20-6 3/4	20-3							

Nom. Tons	S		T	U		V	X	Z
	w/Exh Fan	w/ Ret Fan		w/Exh Fan	w/ Ret Fan			
20, 25	6-6 15/16	3-0	3-9 5/16	3-4 3/8	2-9 15/16	5-7	0-5 13/16	7-9 1/2
30	6-6 15/16	3-0	4-9 5/16	3-4 3/8	2-9 15/16	5-7	0-5 13/16	7-9 1/2

Dimensional Data

Table 2. Heating/cooling unit dimensions (ft. in.) - air-cooled - SEH_, SFH_, SSH_, SLH_, SXH_ (continued)

Nom. Tons	S		T	U		V	X	Z
	w/Exh Fan	w/ Ret Fan		w/Exh Fan	w/ Ret Fan			
40	7-8 3/16	3-4	5-9 5/16	3-4 3/8	3-1½	5-7	0-5 13/16	7-9 1/2
50, 55	7-8 3/16	3-4	6-9 3/8	3-4 3/8	3-1½	5-7	0-5 13/16	7-9 1/2
60	7-8 3/16	4-5	5-9 5/16	4-5 3/8	4-2½	7-8½	0-5 13/16	9-11
70, 75	7-8 3/16	4-5	5-9 5/16	4-5 3/8	4-2½	7-8½	0-5 13/16	9-11

Notes:

1. In columns J and K: top dimension = high gas heat, bottom dimension = low gas heat.
2. Unit drawing is representative only and may not accurately depict all models.
3. Use high gas heat J dimension for all hydronic heat connections.
4. Optional Ultra Low Leak Power Exhaust extends beyond lifting lug and increases overall "Z" dimension by 0.65".

Figure 2. Unit dimensions, SAH_ cooling only units (20 to 75 ton)

Note: *Use the table that follows.*

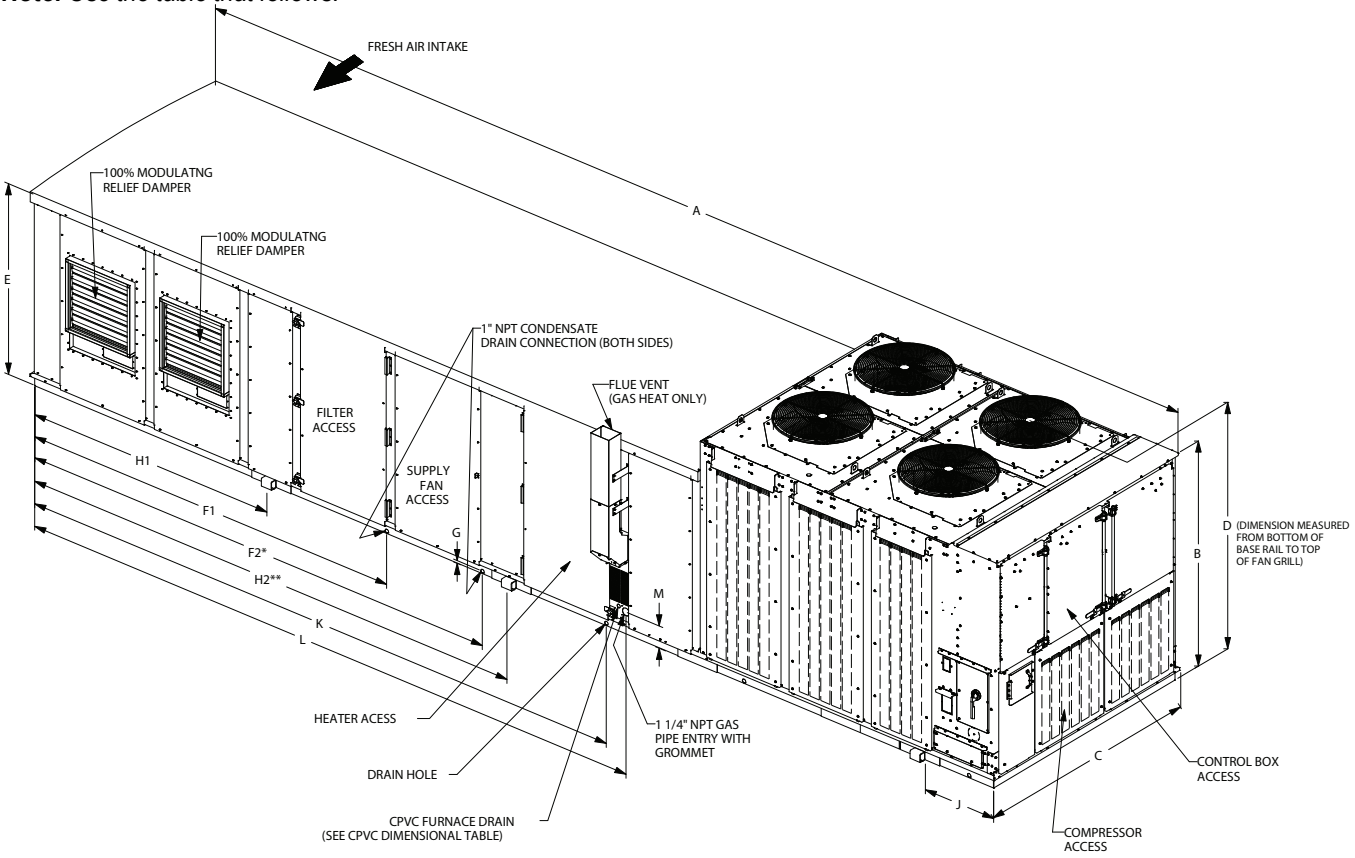

Note: Ultra Low Leak Power Exhaust Damper extends 0.65" beyond lifting lugs

*Condensate drain at F2 not used on DDP fans.
**Lifting lug at H2 not used on 20-36 T units.

Table 3. Unit dimensions, SAH_ cooling only units (20 to 75 ton)

Nom. Tons	A	B	C	D	E	F1	F2	G	H1	H2	J
20, 25	21'–9 3/4"	6'–9"	7'–6 1/2"	7'–3 1/4"	3'–9 5/16"	10'–7"	12'–6"	1"	7'	N/A	1'–3 1/2"
30	21'–9 3/4"	6'–9"	7'–6 1/2"	7'–3 1/4"	4'–9 5/16"	10'–7"	12'–6"	1"	7'	N/A	1'–3 1/2"
40	29'–8"	6'–9"	7'–6 1/2"	7'–3 1/4"	5'–9 5/16"	12'–1 1/4"	15'–4 5/16"	1"	8'	16'–2 5/16"	2'–5"
50, 55	29'–8"	6'–9"	7'–6 1/2"	7'–3 1/4"	6'–9 5/16"	12'–1 1/4"	15'–4 5/16"	1"	8'	16'–2 5/16"	2'–5"
60	29'–8"	6'–9"	9'–8"	7'–3 1/4"	5'–9 5/16"	12'–1 1/4"	15'–4 5/16"	1"	8'	16'–2 5/16"	2'–5"
70, 75	29'–8"	6'–9"	9'–8"	7'–3 1/4"	5'–9 5/16"	12'–1 1/4"	15'–4 5/16"	1"	8'	16'–2 5/16"	2'–5"

Figure 3. Unit base dimensions, SAH_ cooling only units (20 to 75 ton)

Note: *Use table that follows.*

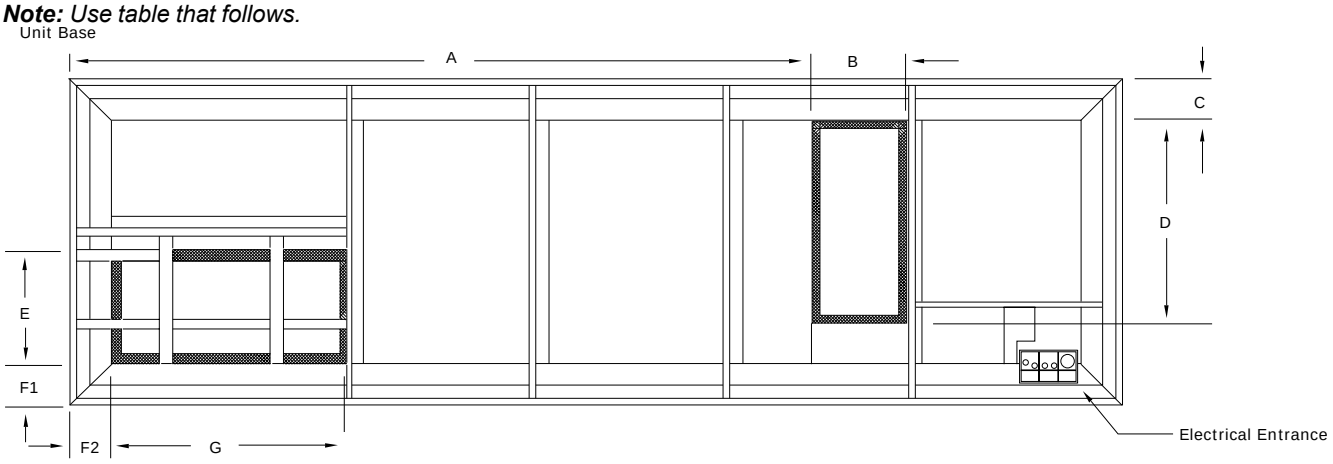

Table 4. Unit base dimensions, SAH_ cooling only units (20 to 75 ton)

Nom. Tons	A	B	C	D	E	
					Fan Type	
					Relief	Return
20–30	14'–30 1/4"	2'–32 1/2"	11 3/4"	5'–7"	3'–4 3/8"	2'–9 15/16"
40–50	16'–31 13/16"	2'–5"	11 3/4"	5'–7"	3'–4 3/8"	3'–1 1/2"
60	16'–31 13/16"	2'–5"	1'–4 9/16"	6'–10 7/8"	4'–5 3/8"	4'–2 1/2"
70–75	16'–31 13/16"	2'-5"	1'–4 9/16"	6'–10 7/8"	4'–5 3/8"	4'–2 1/2"

F1		F2		G	
Fan Type					
Relief	Return	Relief	Return	Relief	Return
5 13/16"	8 1/4"	5 13/16"	28 5/8"	6'–6 15/16"	3'
5 13/16"	8 1/4"	5 13/16"	32 15/16"	7'–8 3/16"	3'–4"
5 13/16"	8 1/4"	5 13/16"	26 7/16"	7'–8 3/16"	4'–5"
5 13/16"	8 1/4"	5 13/16"	26 7/16"	7'–8 3/16"	4'–5"

Figure 4. Unit dimensions, SEH_, SFH_, SLH_, SSH_, SXH_ units (20 to 75 ton)

Note: *Use the following two table for dimensions. Use for CPVC furnace drain dimensions.*

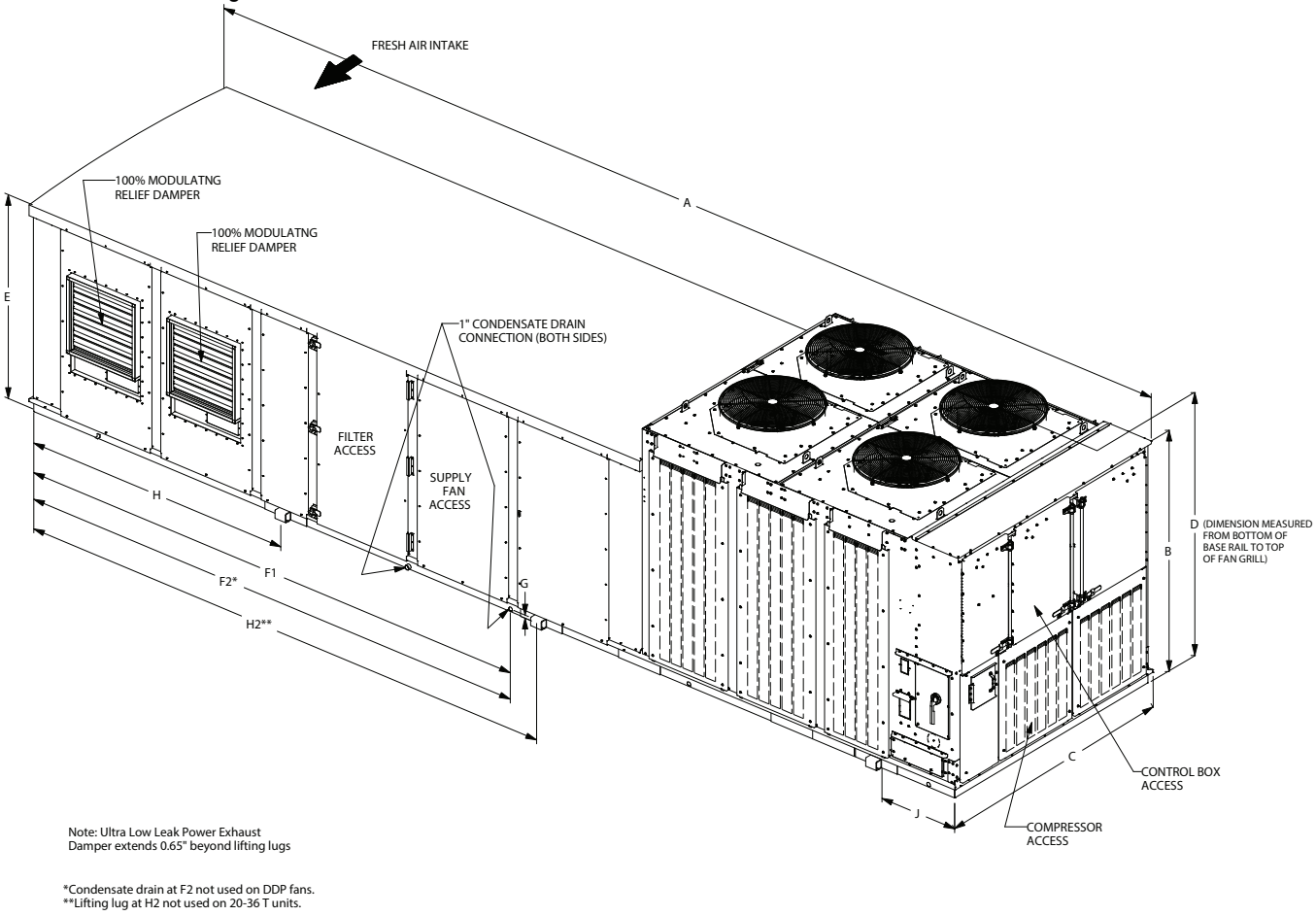

Table 5. Unit dimensions, SEH_, SFH_, SLH_, SSH_, SXH_ units (20 to 75 ton)—air cooled

Nom. Tons	A	B	C	D	E	F1	F2	G	H1	H2	J	K	L	M	N	O
20, 25	24'–1 3/8"	6'–9"	7'–6 1/2"	7'–3 1/4"	3'–9 5/16"	10'–7"	13'–3"	1"	7'	N/A	1'–3 1/2"	16'–7"	16'–6"	8 1/8"	6 1/4"	9"
30	24'–1 3/8"	6'–9"	7'–6 1/2"	7'–3 1/4"	4'–9 5/16"	10'–7"	13'–3"	1"	7'	N/A	1'–3 1/2"	16'–7"	16'–6"	8 1/8"	6 1/4"	9"
40	32'–10 1/2"	6'–9"	7'–6 1/2"	7'–3 1/4"	5'–9 5/16"	12'–1 1/8"	15'–4 5/16"	1"	8'	16'–2 5/16"	2'–5"	19'–7"	See Note	8 1/8"	6 1/4"	9"
50, 55	32'–10 1/2"	6'–9"	7'–6 1/2"	7'–3 1/4"	6'–9 5/16"	12'–1 1/8"	15'–4 5/16"	1"	8'	16'–2 5/16"	2'–5"	19'–7"	See Note	8 1/8"	6 1/4"	9"
60	32'–10 1/2"	6'–9"	9'–8"	7'–3 1/4"	5'–9 5/16"	12'–1 1/8"	15'–4 5/16"	1"	8'	16'–2 5/16"	2'–5"	19'–7"	See Note	8 1/8"	6 1/4"	9"
70, 75	32'–10 1/2"	6'–9"	9'–8"	7'–3 1/4"	5'–9 5/16"	12'–1 1/8"	15'–4 5/16"	1"	8'	16'–2 5/16"	2'–5"	19'–7"	See Note	8 1/8"	6 1/4"	9"

Table 6. CVPC furnace drain dimensions

Nom. Ton (AC/EC)	Furnace Size/MBh	Dimensions (Note)	
		Length	Height
20 & 25	Low = 235	195-5/32"	9-5/32"
	High = 500	195-5/32"	9-5/32"
30	Low = 350	195-5/32"	9-5/32"
	High = 500	195-5/32"	9-5/32"
40	Low = 350	240-1/8"	9-5/32"
	High = 850	231-1/8"	9-5/32"
50-75	Low = 500	240-1/8"	9-5/32"
	High = 850	231-1/8"	9-5/32"

Note: The length dimension is from the relief end of the unit. The height dimension is from the bottom of the unit base rail.

Figure 5. Unit base dimensions, SEH_, SFH_, SLH_, SSH_, SXH_ units (20 to 75 ton)

Note: *Use the table that follows.*

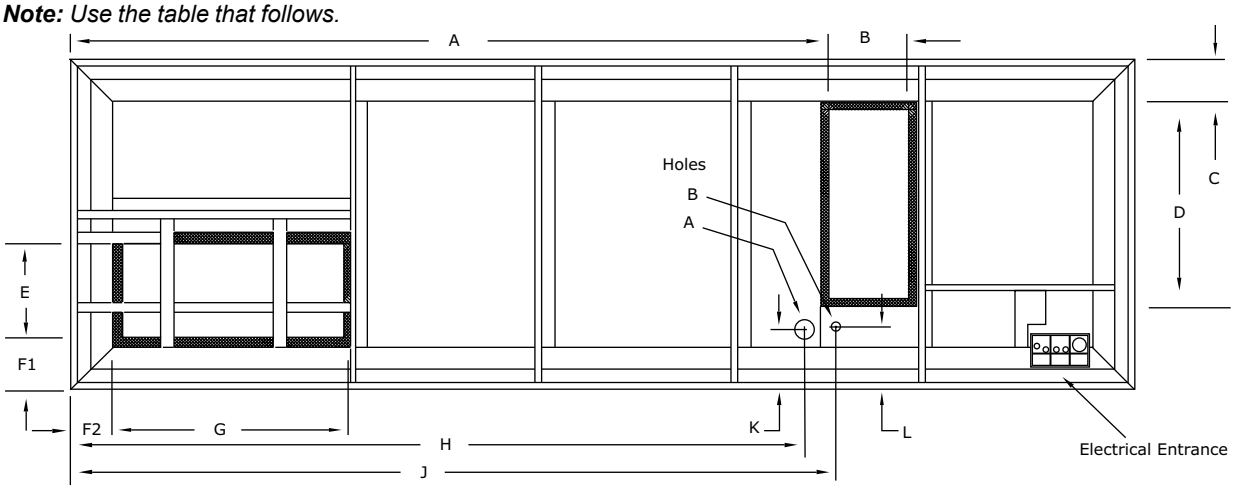

Unit Base Notes:
1. SEH_ — For 200/230 volt electric heat units, use hole "A" (3⅝" diameter).
2. SFH_ — For gas heat units, use hole "B" (1¼" diameter).
3. SLH_ and SSH_ — For steam or hot water heat units, use holes "A" (3⅝" steam or hot water supply) and "B" (3" steam or hot water return).
4. SXH_ — In extended cabinet cooling only units, the holes are omitted

Dimensional Data

Table 7. Unit base dimensions, SEH_, SFH_, SLH_, SSH_, SXH_ units (20 to 75ton)—air cooled

Nom. tons	A	B	C	D	E		F1		G		F2	
					Fan Type							
					Relief	Return	Relief	Return	Relief	Return	Relief	Return
20–30	16'–3 3/16"	2'–2 1/2"	5 13/16"	5'–7"	3'–4 3/8"	2'–9 15/16"	5 13/16"	8 1/4"	6'–6 15/16"	3'	5 13/16"	28 5/8"
40 & 50	19'–10 5/16"	2'–5"	7 1/16"	5'–7"	3'–4 3/8"	3'–1 1/2"	5 13/16"	8 1/4"	7'–8 3/16"	3'–4"	5 13/16"	32 15/16"
60	19'–10 5/16"	2'–5"	6 1/16"	Note 1	4'–5 3/8"	4'–2 1/2"	5 13/16"	8 1/4"	7'–8 3/16"	4'–5"	5 13/16"	26 7/16"
70–75	19'–10 5/16"	2'–5"	6 1/16"	Note 1	4'–5 3/8"	4'–2 1/2"	5 13/16"	8 1/4"	7'–8 3/16"	4'–5"	5 13/16"	26 7/16"

H	J	K	L
15'–5 5/16"	16'–9 3/4"	8 13/16"	9 1/16"
18'–11 11/16"	Note 2	8 3/16"	9 1/16"
18'–11 11/16"	Note 2	8 3/16"	9 1/16"
18'–11 11/16"	Note 2	8 3/16"	9 1/16"

Notes:

1. 5'–5 15/16" for SEH_ units or 7'–8 1/2" for SFH_, SLH_, SSH_, SXH_ units.
2. 20'–1 3/4" for SFH_ "High Heat" units or 20'–6 3/4" for SFH_ "Low Heat" units. Either is selectable in field for SL and SS Return.

Figure 6. S_H_ cooling and heating units (90-130 ton)

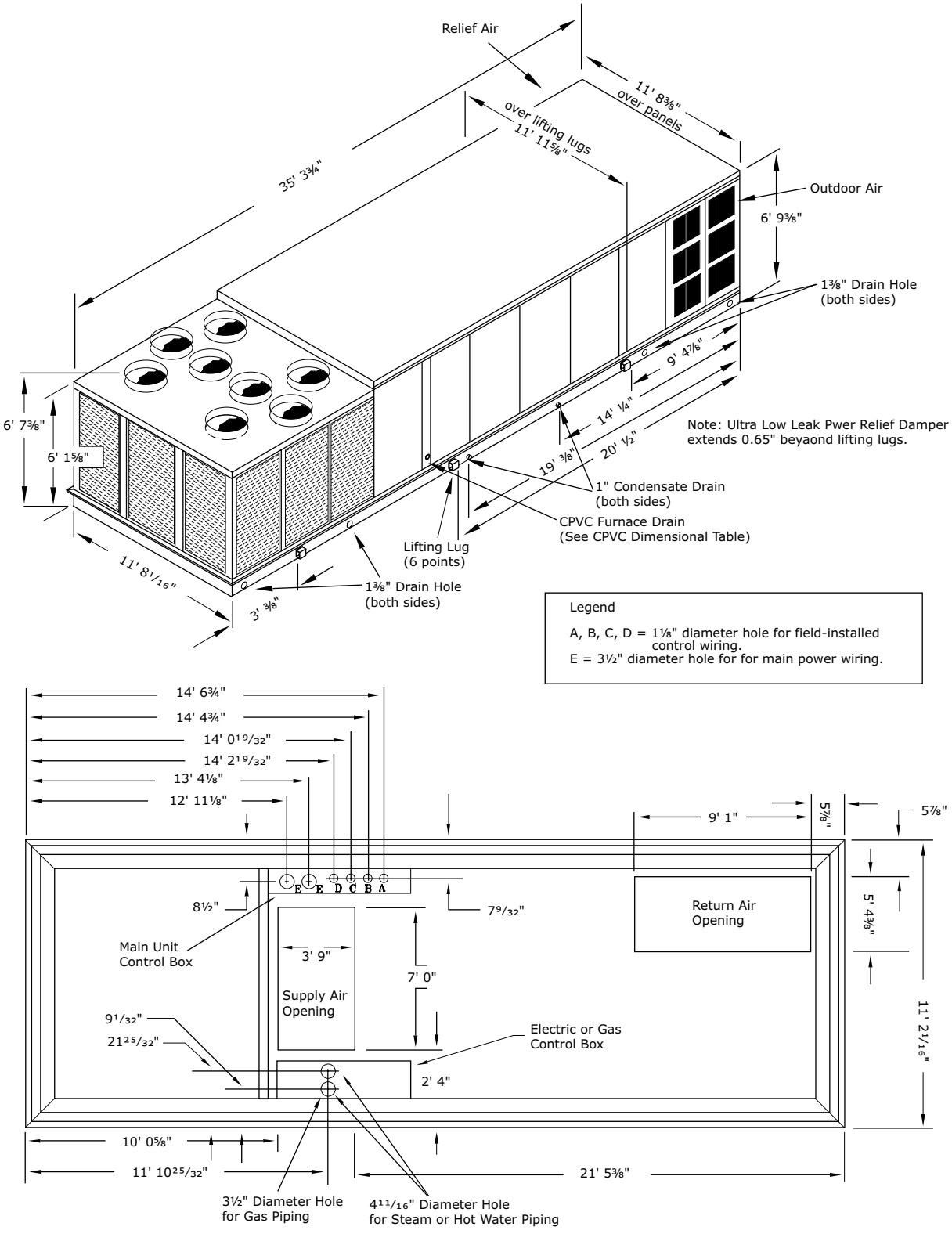

Center of Gravity

Figure 7. Center of gravity dimensional data

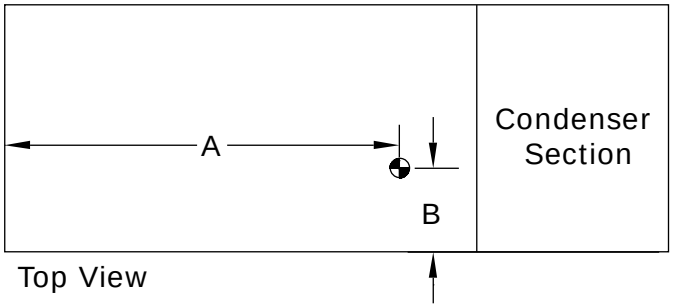

Table 8. Center of gravity dimensional data

Unit Model	Unit Size	Units without 100% Relief/Return Fan		Units with Relief/Return Fan		Units with Supply & Relief/Return VFD	
		Dim. A	Dim. B	Dim. A	Dim. B	Dim. A	Dim. B
SAHL	20	13' 5"	3' 10"	12' 9"	3' 9"	12' 3"	3' 10"
	25	13' 6"	3' 10"	12' 10"	3' 9"	12' 3"	3' 10"
	30	12' 10"	3' 10"	12' 0"	3' 9"	11' 6"	3' 10"
	40	17' 4"	4' 0"	16' 2"	3' 11"	15' 6"	3' 11"
	50	17' 6"	4' 0"	16' 4"	3' 11"	15' 8"	3' 11"
	55	17' 6"	4' 0"	16' 4"	3' 11"	15' 9"	3' 11"
	60	16' 11"	4' 10"	15' 9"	4' 8"	15' 2"	4' 9"
	70	16' 12"	4' 10"	15' 9"	4' 8"	15' 3"	4' 9"
	75	17' 6"	4' 10"	16' 3"	4' 8"	15' 8"	4' 9"
SEHL, SLHL, SSHL, SXHL	20	14' 7"	3' 9"	13' 11"	3' 8"	13' 4"	3' 9"
	25	14' 7"	3' 9"	13' 11"	3' 8"	13' 5"	3' 9"
	30	13' 12"	3' 9"	13' 1"	3' 8"	12' 7"	3' 9"
	40	18' 9"	3' 11"	17' 7"	3' 10"	16' 11"	3' 10"
	50	19' 1"	4' 0"	17' 10"	3' 11"	17' 2"	3' 11"
	55	19' 1"	4' 0"	17' 11"	3' 11"	17' 3"	3' 12"
	60	18' 5"	4' 9"	17' 1"	4' 7"	16' 5"	4' 8"
	70	18' 7"	4' 10"	17' 3"	4' 8"	16' 8"	4' 9"
	75	19' 1"	4' 10"	17' 9"	4' 8"	17' 2"	4' 9"
SFHL	20	14' 8"	3' 10"	14' 0"	3' 9"	13' 6"	3' 10"
	25	14' 9"	3' 9"	14' 1"	3' 8"	13' 6"	3' 9"
	30	14' 1"	3' 9"	13' 3"	3' 8"	12' 9"	3' 9"
	40	18' 11"	3' 11"	17' 9"	3' 10"	17' 2"	3' 10"
	50	19' 1"	3' 11"	17' 11"	3' 10"	17' 3"	3' 11"
	55	19' 1"	3' 11"	18' 0"	3' 10"	17' 4"	3' 11"
	60	18' 6"	4' 9"	17' 3"	4' 7"	16' 8"	4' 9"
	70	18' 7"	4' 9"	17' 4"	4' 7"	16' 9"	4' 8"
	75	19' 1"	4' 9"	17' 10"	4' 7"	17' 3"	4' 9"
SEHK, SLHK, SSHK, SXHK	90	19’ 11”	6’ 3”	18’ 5”	5’ 10”	17’ 5”	5’ 10”
	105	20’ 4”	6’ 3”	18’ 10”	5’ 11”	17’ 10”	6’ 0”
	115	20’ 0”	6’ 3”	18’ 6”	5’ 11”	17’ 7”	6’ 0”
	130	19’ 11”	6’ 3”	18’ 6”	5’ 11”	17’ 7”	6’ 0”
SFHK	90	19’ 11”	6’ 4”	18’ 6”	6’ 0”	17’ 6”	5’ 11”
	105	20’ 4”	6’ 4”	18’ 11”	6’ 0”	18’ 0”	6’ 1”
	115	20’ 0”	6’ 4”	18’ 7”	6’ 0”	17’ 8”	6’ 1”
	130	20’ 0”	6’ 4”	18’ 7”	6’ 0”	17’ 8”	6’ 0”

Note: Dimensions shown for the center-of-gravity are approximate and are based on a unit equipped with: Standard coils, FC Fans, 100% economizer, throwaway filters, 460 volt XL start, high capacity heat (as applicable).

Electrical Entry Details

Figure 8. Electrical entrance dimensions, SAH_ cooling only units (20 to 75 ton)

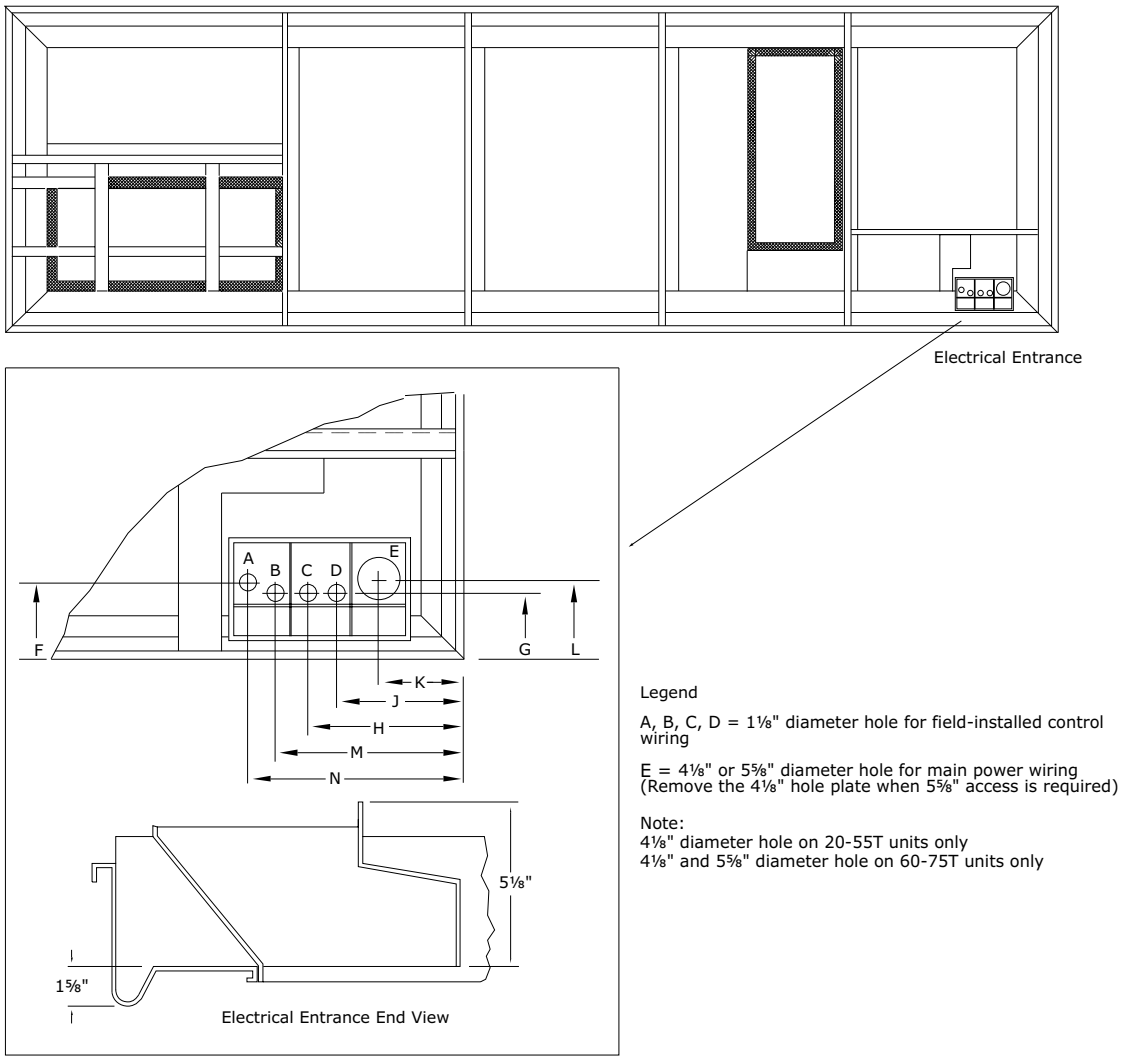

Table 9. Electrical entrance dimensions, SAH_ cooling only units (20 to 75 ton)

Nom. Tons	F	G	H	J	K	L	M	N
20 - 30	8 7/32"	6 31/32"	15 21/32"	13 21/32"	9 17/32"	8 1/2"	18 1/16"	19 9/16"
40 - 75	8 7/8"	7 7/8"	17 7/8"	15 7/8"	9 29/32"	10 3/16"	20 13/32"	22 5/32"

Dimensional Data

Figure 9. Electrical entrance dimensions, SEH_, SFH_, SLH_, SXH_ units (20 to 75 tons)

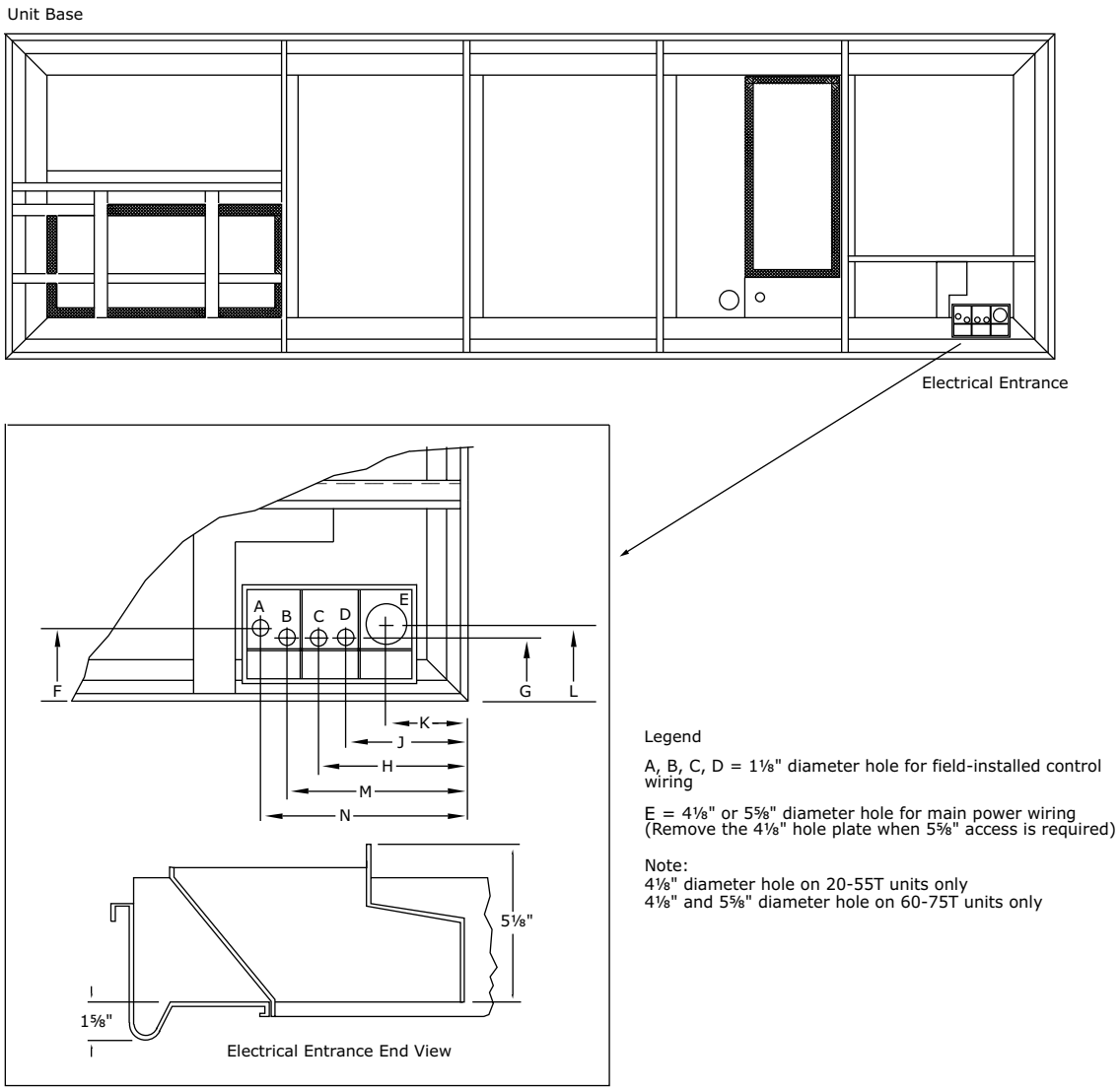

Table 10. Electrical entrance dimensions, SEH_, SFH_, SLH_, SSH_, SXH_ units (20 to 75 ton)

Nom. Tons	F	G	H	J	K	L	M	N
20 - 30	8 7/32"	6 31/32"	15 21/32"	13 21/32"	9 17/32"	8 1/2"	18 1/16"	19 9/16"
40 - 75	8 7/8"	7 7/8"	17 7/8"	15 7/8"	9 29/32"	10 3/16"	20 13/32"	22 5/32"

Minimum Required Clearance

Figure 10. Minimum operation and service clearances for single and multiple unit installation

Single Unit Installation

Legend

A = Return Air Opening
B = Outside Air Intake
C = Supply Air Opening
D = Condenser Section
E = Optional 2'10-3/4" Exhaust/Return Access Door (180° swing)
F = Hinged 2'10-3/4" Filter Access Door (180° swing)
G = Hinged 2'10-3/4" optional Heater or Final Filter Access Door (180° swing)
H = Hinged 2'10-3/4" Supply Fan Access Door (180° swing) (90-130 ton)
J = Hinged 2'4-1/2" Control Panel Door (180° swing) (90-130 ton)
K = Hinged 2'10-3/4" VFD Access Door (180° swing)
L = Hinged 2'10-3/4" Evap Condenser Access Door (180° swing)
M = Hinged 2'8" Control Panel Door (180° swing) (20-36 ton)
Hinged 3'6" Control Panel Door (180° swing) (40-75 ton)

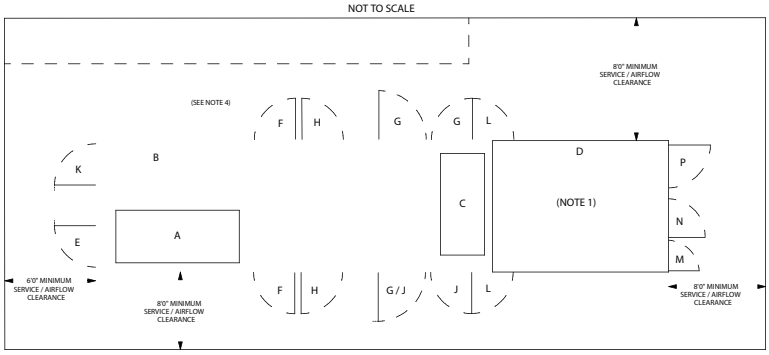

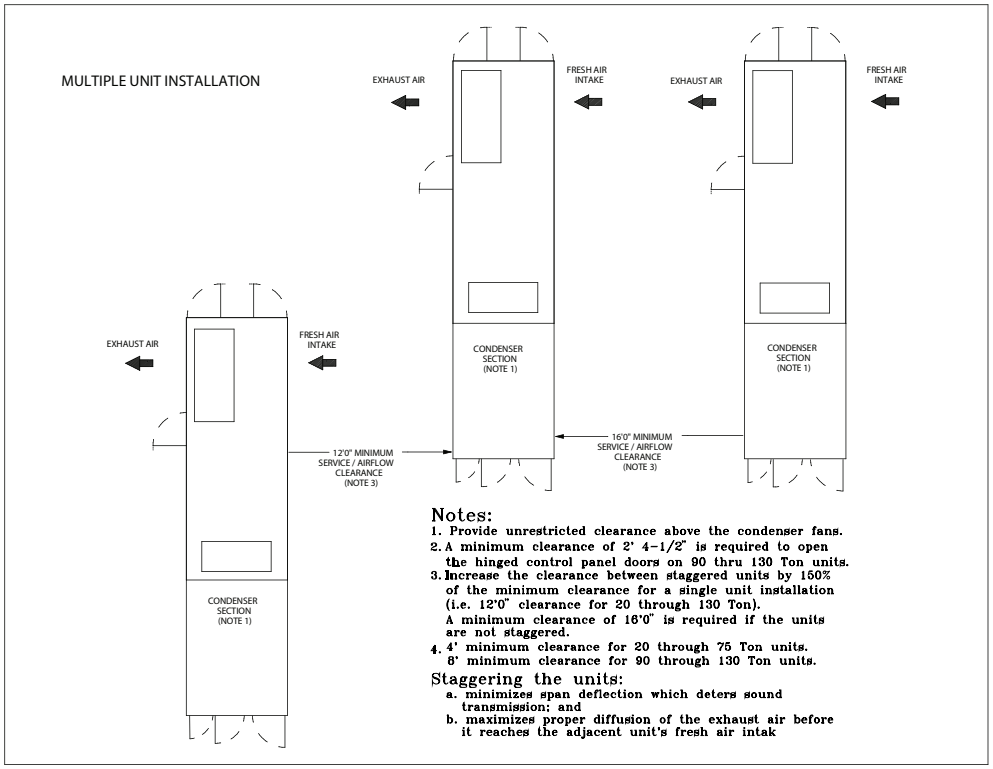

Weights

Table 11. Air-cooled condenser - approximate operating weights (lbs.)

Unit	Without Exhaust Fan						With Exhaust Fan					
	SA	SX	SE	SF	SL	SS	SA	SX	SE	SF	SL	SS
20	4599	4919	5184	5439	5309	5473	4897	5217	5482	5737	5607	5771
25	4602	4922	5187	5442	5312	5576	4906	5226	5491	5746	5616	5880
30	5035	5381	5646	5901	5771	5933	5492	5838	6103	6358	6228	6390
40	7130	7485	7810	8200	8020	7700	7800	8155	8480	8870	8690	8370
50	7554	8004	8329	8719	8539	8270	8273	8723	9048	9438	9258	8989
55	7560	8004	8329	8719	8539	8270	8279	8723	9048	9438	9258	8989
60	8835	9481	9806	10296	10291	10464	9778	10424	10749	11239	11234	11407
70	9018	9663	9988	10478	10473	10646	9961	10606	10931	11421	11416	11589
75	9350	9999	10324	10814	10809	10982	10293	10942	11267	11757	11752	11925
90	X	13167	13322	13967	14042	14017	X	14505	14660	15305	15380	15355
105	X	13800	13955	14600	14675	14650	X	15138	15293	15938	16013	15988
115	X	14004	14159	14804	14879	14854	X	15342	15497	16142	16217	16192
130	X	14942	14445	15090	15165	15140	X	16280	15783	16428	16503	16478

Notes:

1. Weights shown are for air-cooled units with standard efficiency and include the following features: FC fans, Supply Fan VFD, standard scroll compressors, 100% economizer, throwaway filters, maximum motor sizes, 460V XL start, high capacity heat, and access doors.
2. Weights shown represent approximate operating weights and have a ±10% accuracy. To calculate weight for a specific unit configuration, utilize TOPSS™ or contact the local Trane® sales representative. ACTUAL WEIGHTS ARE STAMPED ON THE UNIT NAMEPLATE.

Table 12. Roof curb max weight (lbs./kg.)

Unit	Roof Curb Max. Weight	
	SAH_	SEH_, SFH_, SLH_, SSH, SXH_
20, 25, 30	490	510
40, 50, 55	515	550
60, 70, 75	610	640
90-130	N/A	770

Note: Roof curb weights include the curb and pedestal.

Installation

Roof Curb and Ductwork

The roof curbs consist of two main components: a pedestal to support the unit condenser section and a “full perimeter” enclosure to support the unit’s air handler section.

Before installing any roof curb, verify the following:

- It is the correct curb for the unit.
- It includes the necessary gaskets and hardware.
- The purposed installation location provides the required clearance for proper operation.
- The curb is level and square — the top surface of the curb must be true to assure an adequate curb-to-unit seal.

Step-by-step curb assembly and installation instructions ship with each Trane accessory roof curb kit. Follow the instructions carefully to assure proper fit-up when the unit is set into place.

Note: *To assure proper condensate flow during operation, the unit (and curb) must be as level as possible. The maximum slope allowable for rooftop unit applicationsexcluding SSH_s, is 4" end-to-end and 2" side-to-side. Units with steam coils (SSH_s) must be set level!*

If the unit is elevated, a field constructed catwalk around the unit is strongly recommended to provide easy access for unit maintenance and service. Recommendations for installing the Supply Air and Return Air ductwork joining the roof curb are included in the curb instruction booklet. Curb ductwork must be fabricated and installed by the installing contractor before the unit is set into place.

Note: *For sound consideration, cut only the holes in the roof deck for the ductwork penetrations. Do not cut out the entire roof deck within the curb perimeter.*

Pitch Pocket Location

The location of the main supply power entry is located at the bottom right-hand corner of the control panel. illustrates the location for the electrical entrance through the base in order to enter the control panel. If the power supply conduit penetrates the building roof beneath this opening, it is recommended that a pitch pocket be installed before the unit is placed onto the roof curb.

The center line dimensions shown in the illustration below indicates the center line of the electrical access hole in the unit base when it is positioned on the curb, ±3/8 inch. The actual diameter of the hole in the roof should be at least 1/2 inch larger than the diameter of the conduit penetrating the roof. This will allow for the clearance variable between the roof curb rail and the unit base rail illustrated in Figure 11, p. 30.

The pitch pocket dimensions listed are recommended to enhance the application of roofing pitch after the unit is set into place. The pitch pocket may need to be shifted as illustrated to prevent interference with the curb pedestal.

If a Trane Curb Accessory Kit is not used:

- The ductwork can be attached directly to the factory-provided flanges around the unit supply and return air openings. Be sure to use flexible duct connections at the unit.
- For “built-up” curbs supplied by others, gaskets must be installed around the curb perimeter flange and the supply and return air opening flanges.
- If a “built-up” curb is provided by others, it should NOT be made of wood.
- If a “built-up” curb is provided by others, keep in mind that these commercial rooftop units do not have base pans in the condenser section.
- If this is a REPLACEMENT UNIT without the IRU option, keep in mind that the CURRENT DESIGN commercial rooftop units do not have base pans in the condenser section.
- Trane roof curbs are recommended. If using a non-Trane roof curb with right-angle return airflow approaches to a return fan inlet, a rigid, solid flow baffle wall should be installed across the full width of the roof curb return airflow path in the position shown in Figure 17, p. 37 to reduce potential airflow disturbances at the return fan inlet that could contribute to unusual return fan noise.
- If a full perimeter curb is used, make sure the IRU option was added to the unit to ensure stability in the condenser section

Figure 11. Pitch pocket location

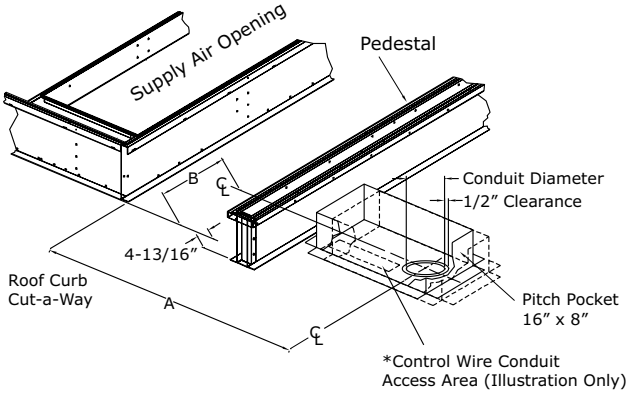

Table 13. Pitch pocket dimensions — S*HL

Tonnage	“A” Dimension	"B" Dimension
20, 25 & 30	4' 5–9/16"	5–9/16"
24, 29, & 36	6' 9–11/16”	5–1/2”
40–75	9' 5–11/16"	5–1/2"

Note: For all unit functions (SAH_, SEH_, SFH_, SLH_, SSH_, and SXH_).

Unit Rigging and Placement

⚠ WARNING

Heavy Object!

Failure to follow instructions below could result in unit dropping which could result in death or serious injury, and equipment or property-only damage. Ensure that all the lifting equipment used is properly rated for the weight of the unit being lifted. Each of the cables (chains or slings), hooks, and shackles used to lift the unit must be capable of supporting the entire weight of the unit. Lifting cables (chains or slings) may not be of the same length. Adjust as necessary for even unit lift.

Note: *Use spreader bars as shown in the diagram. Refer to “Weights,” p. 28 or the unit nameplate for the unit weight. Refer to the Installation Instructions located inside the side control panel for further rigging information.*

1. To configure the unit Center-of-Gravity, utilize TOPSS or contact the local Trane sales office.
2. Attach adequate strength lifting slings to all four lifting lugs on 20-30 ton units and all six lifting lugs on the 40-130 ton units. The minimum distance between the lifting hook and the top of the unit should be 7 feet for 20-30 ton units and 12 feet for 40-130 ton units. Figure 12, p. 32 illustrates the installation of spreader bars to protect the unit and to facilitate a uniform lift. lists the typical unit operating weights.
3. Test lift the unit to ensure it is properly rigged and balanced, make any necessary rigging adjustments. Slightly pitch the unit (no more than 1 ft) so the condenser end is above the return end of the unit. This will aid in aligning the unit with the roof curb described in Step 5Installation_Unit Rigging and Placement.
4. Lift the unit and position it over the curb and pedestal. These units have a continuous base rail around the air handler section which matches the curb.

   Important: *For replacements, remove old gasket from the roof curb and place new gasket material on curb. See “Installation of New Units,” p. 64 to determine gasket material length using roof curb dimensions.*
5. Align the base rail of the unit air handler section with the curb rail while lowering the unit onto the curb. Make sure that the gasket on the curb is not damaged while positioning the unit. (The pedestal simply supports the unit condenser section)

   A cross section of the juncture between the unit and the roof curb is shown below.

Figure 12. Unit rigging

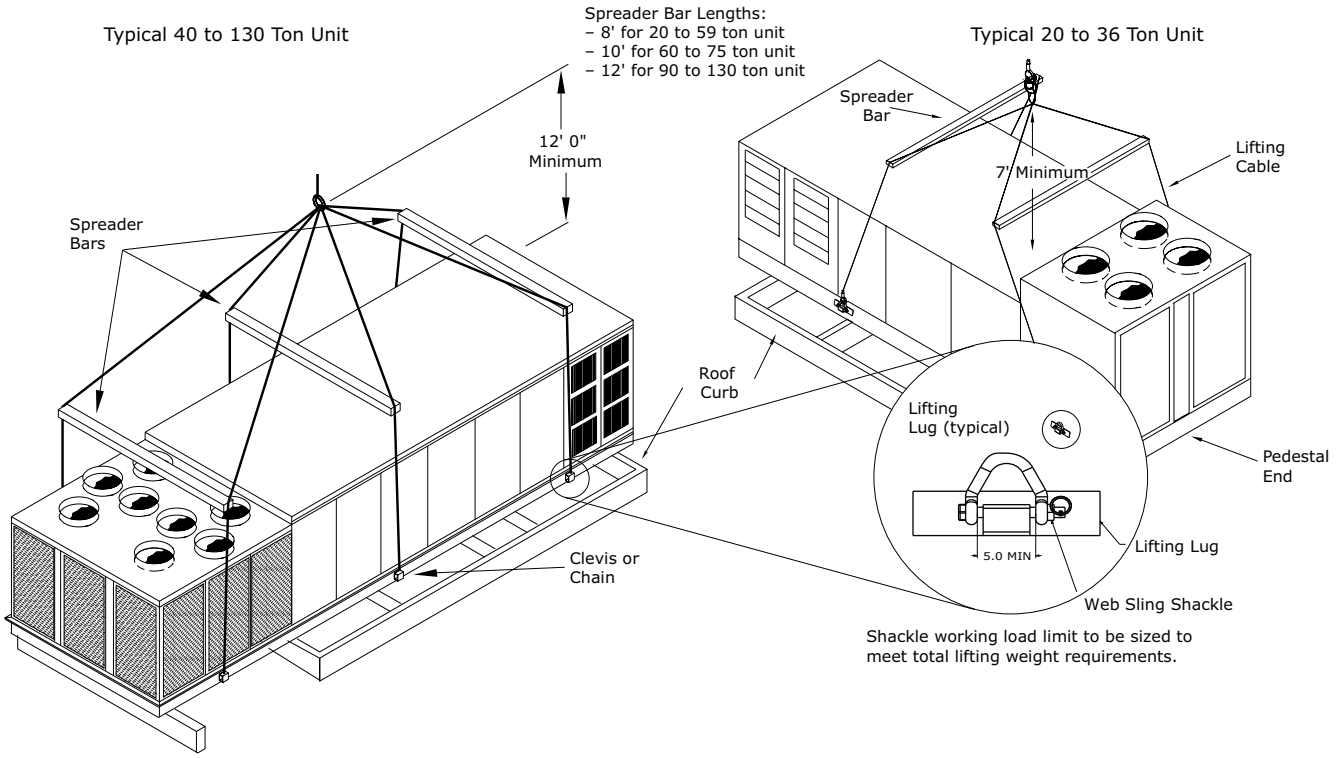

Figure 13. Typical unit base and roof curb cross section

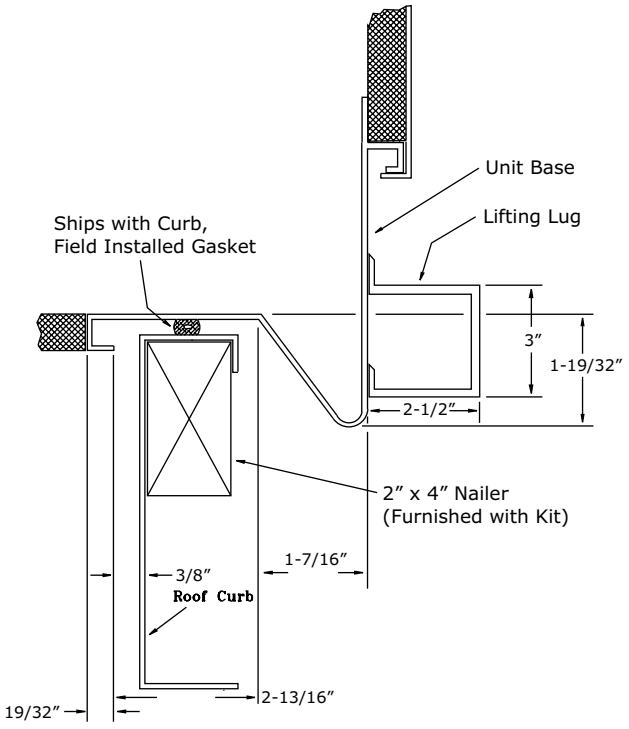

General Installation Requirements

The checklist below is a summary of the steps required to successfully install a Commercial rooftop unit. This checklist is intended to acquaint the installing personnel with what is required in the installation process. It does not replace the detailed instructions called out in the applicable sections of this manual.

- ☐ Complete "Unit Inspection," p. 13 checklist.
- ☐ Verify that the installation location of the unit will provide the required clearance for proper operation.
- ☐ Assemble and install the roof curb. Refer to the current edition of the roof curb installer's guide.
- ☐ Fabricate and install ductwork; secure ductwork to curb. Do not use the unit to support the weight of the ducting.
- ☐ Install pitch pocket for power supply through building roof. (If applicable).

Rigging the Unit

- ☐ Set the unit onto the curb; check for levelness.
- ☐ Ensure unit-to-curb seal is tight and without buckles or cracks.
- ☐ Install and connect condensate drain lines to each evaporator drain connection.
- ☐ Remove the shipping hardware from each compressor assembly.

- ☐ Remove the shipping hold-down bolts and shipping channels from the supply and relief /return fans with rubber or spring isolators.
- ☐ Check all supply and relief/return fan spring isolators for proper adjustment.
- ☐ Verify that all plastic coverings are removed from the compressors.
- ☐ Verify all discharge line service valves (one per circuit) are back seated.

Main Electrical Power

- ☐ Verify that the power supply complies with the unit nameplate specifications. Refer to Main Unit Power Wiring in the Installation chapter.
- ☐ Inspect all control panel components; tighten any loose connections.
- ☐ Connect properly sized and protected power supply wiring to a field-supplied/installed disconnect and unit
- ☐ Properly ground the unit.
- ☐ All field-installed wiring must comply with NEC and applicable local codes.

Field Installed Control Wiring

- ☐ Complete the field wiring connections for the variable air volume controls as applicable.

Note: *All field-installed wiring must comply with NEC and applicable local codes.*

Electric Heat Units

- ☐ Verify that the power supply complies with the electric heater specifications on the unit and heater nameplate.
- ☐ Inspect the heater junction box and control panel; tighten any loose connections.
- ☐ Check electric heat circuits for continuity.
- ☐ On SEH_L units with 200V or 230V electric heat (requires separate power supply to heater) — Connect properly sized and protected power supply wiring for the electric heat from a dedicated, field- supplied/ installed disconnect to terminal block 3XD5, or to an optional unit-mounted disconnect switch 3QB4.

Gas Heat (SFH_)

- ☐ Gas supply line properly sized and connected to the unit gas train.
- ☐ All gas piping joints properly sealed.
- ☐ Drip leg installed in the gas piping near the unit.
- ☐ Gas piping leak checked with a soap solution. If piping connections to the unit are complete, do not pressurize piping in excess of 0.50 psig or 14 inches w.c. to prevent component failure.
- ☐ Main supply gas pressure adequate.
- ☐ Flue Tubes clear of any obstructions.
- ☐ Factory-supplied flue assembly installed on the unit.
- ☐ LP (Propane) kit parts installed (if required).
- ☐ Connect the 3/4" CPVC furnace drain stubout to a proper condensate drain. Provide heat tape or insulation for condensate drain as needed.

Hot Water Heat (SLH_)

- ☐ Route properly sized water piping through the base of the unit into the heating section.
- ☐ Install the factory-supplied, 3-way modulating valve.
- ☐ Complete the valve actuator wiring.

Steam Heat (SSH_)

- ☐ Install an automatic air vent at the top of the return water coil header.
- ☐ Route properly sized steam piping through the base of the unit into the heating section.
- ☐ Install the factory-supplied, 2-way modulating valve
- ☐ Complete the valve actuator wiring.
- ☐ Install 1/2", 15-degree swing-check vacuum breaker(s) at the top of each coil section. Vent breaker(s) to the atmosphere or merge with return main at discharge side of steam trap.
- ☐ Position the steam trap discharge at least 12" below the outlet connection on the coil.
- ☐ Use float and thermostatic traps in the system, as required by the application.

O/A Pressure Sensor and Tubing Installation

(All units with Statitrac or return fans)

- ☐ O/A pressure sensor mounted to the roof bracket.
- ☐ Factory supplied pneumatic tubing installed between the O/A pressure sensor and the connector on the vertical support.
- ☐ Field supplied pneumatic tubing connected to the proper fitting on the space pressure transducer located in the filter section, and the other end routed to a suitable sensing location within the controlled space (Statitrac only).

Modulating Reheat (S_H_)

- ☐ Install space humidity and temperature sensors. Refer to unit diagrams for guidelines.

Condensate Drain Connections

Each unit is provided with 1" evaporator condensate drain connections (two on each side of the unit for FC supply fans and one on each side of the unit for DDP supply fans).

Due to the size of these units, all condensate drain connections must be connected to the evaporator drain connections.

Refer to the appropriate illustration in for the location of these drain connections.

A condensate trap must be installed due to the drain connection being on the “negative pressure” side of the fan. Install the P-Traps at the unit using the guidelines in Figure 14, p. 34.

Figure 14. Condensate trap installation

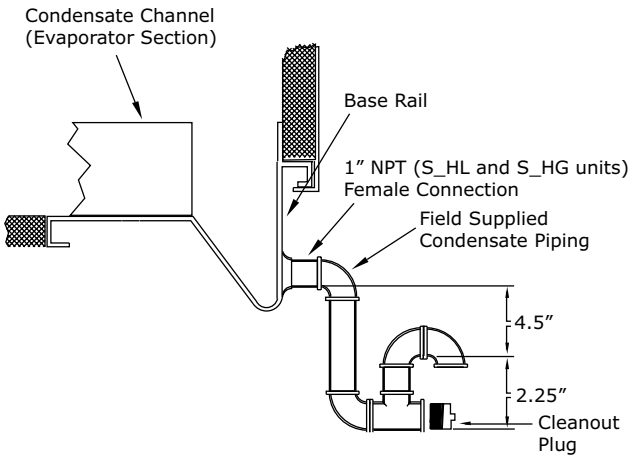

Pitch the drain lines at least 1/2 inch for every 10 feet of horizontal run to assure proper condensate flow. Do not allow the horizontal run to sag causing a possible double-trap condition which could result in condensate backup due to “air lock”.

Figure 15. Condensate drain locations

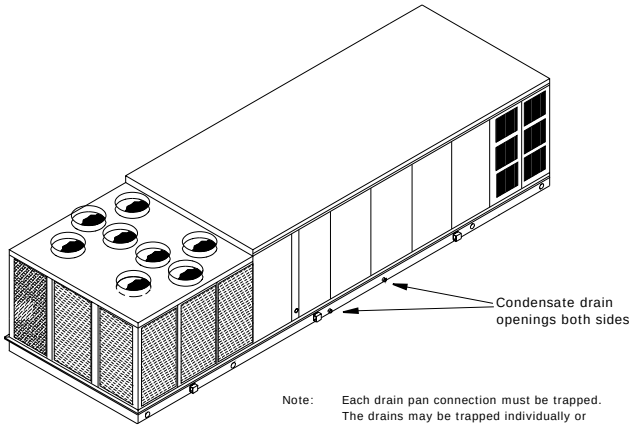

Units with Gas Furnace

Units equipped with a gas furnace have a 3/4" CPVC drain connection stubbed out through the vertical support in the gas heat section. It is extremely important that the condensate be piped to a proper drain. Refer to the appropriate illustration in for the location of the drain connection.

Note: *Units equipped with an optional modulating gas furnace will likely operate in a condensing mode part of the time.*

An additional 1–1/4" non-connectable water drain is located in the base rail within the heating section. Ensure that all condensate drain line installations comply with applicable building and waste disposal codes.

Note: *Installation on gas heat units will require addition of heat tape to the condensate drain.*

Removing Supply and Relief/ Return Fan Shipping Channels (motors >5 Hp)

Each FC supply fan assembly and relief fan assembly for S_H_ units shipped with a motor larger than 5 HP is equipped with rubber isolators (as standard) or optional spring isolators. Each DDP supply fan assembly for SAH_ and SXH_ units is equipped with spring isolators. Each return fan assembly for units shipped with a motor larger than 5 HP is equipped with spring isolators. Shipping channels are installed beneath each fan assembly and must be removed. To locate and remove these channels, refer to Figure 17, p. 37 and Figure 19, p. 39, and use the following procedures:

Spring Isolators

See Figure 17, p. 37 through Figure 19, p. 39 for spring isolator locations.

1. Remove and discard the shipping tie down bolts.
2. Remove the shipping channels and discard.

Notes:

- *Fan assemblies not equipped with rubber or spring isolators have mounting bolts at the same locations and must not be removed .*
- *If return fan backside spring isolator repair/ replacement is required, access the backside of the return fan by entering the unit filter section. Remove the top pivot bearings from the three fixed- position return damper blades (bolted together as a single section with an angle brace). Lift the three-blade section as a single unit from the return damper assembly and set aside or lean in against the return fan frame. Then enter the return fan compartment from the filter section to perform service work on the rear isolators.*

Optional DDP Supply Fan Shipping Channel Removal and Isolator Spring Adjustment

Shipping Tie Down and Isolator Spring Adjustment

Remove shipping tie down bolt and washer (4—20 to 30 ton, 6—40 to 55 ton, 8—60 to 75 ton). **Leave shipping channels in place.** Verify spring height is 0.1" to 0.2"

above shipping channel. Spring height is factory set but verify and adjust as needed as follows:

1. Back off ALL spring isolator jam nuts (4) at top of assembly (adjusting one spring effects all others)
2. Turn adjustment bolt (make small adjustments; again each change effects all other springs. Clockwise raises; counter clockwise lowers).
3. When correctly adjusted re-tighten jam nuts and **remove shipping channels. Do NOT remove electrical ground wire strap between isolation base and unit base.**

Figure 16. DDP shipping channel removal, isolator spring adjustment

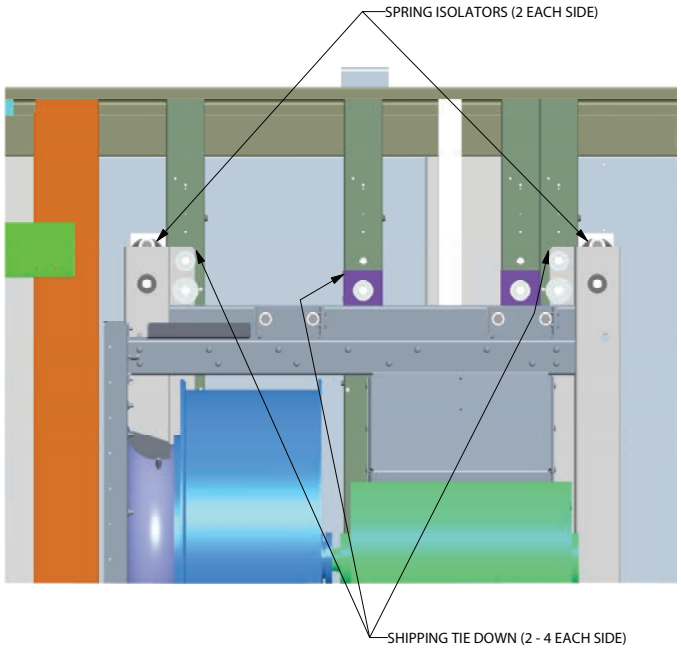

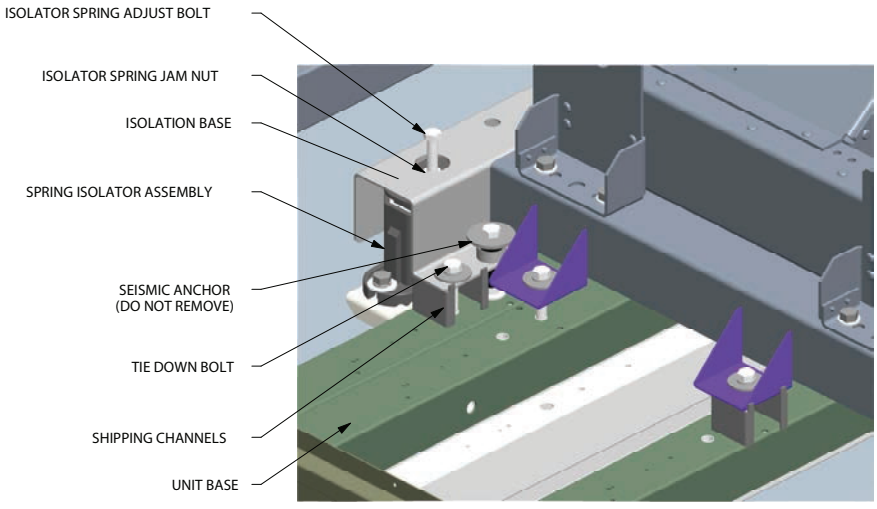

Figure 17. Removing supply and relief fan assembly shipping hardware (20 to 75 ton)

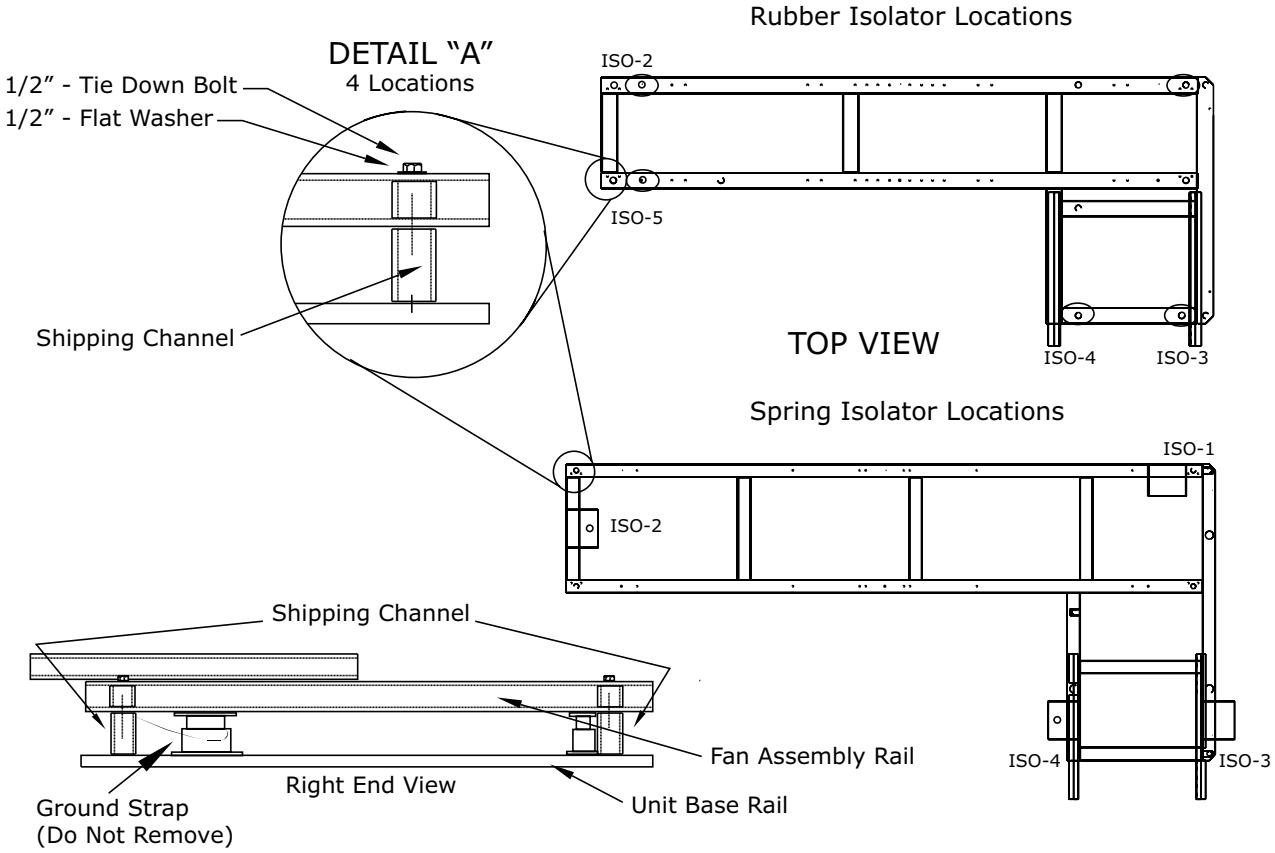

Figure 18. Removing supply and relief fan assembly shipping hardware (90 to130 ton)

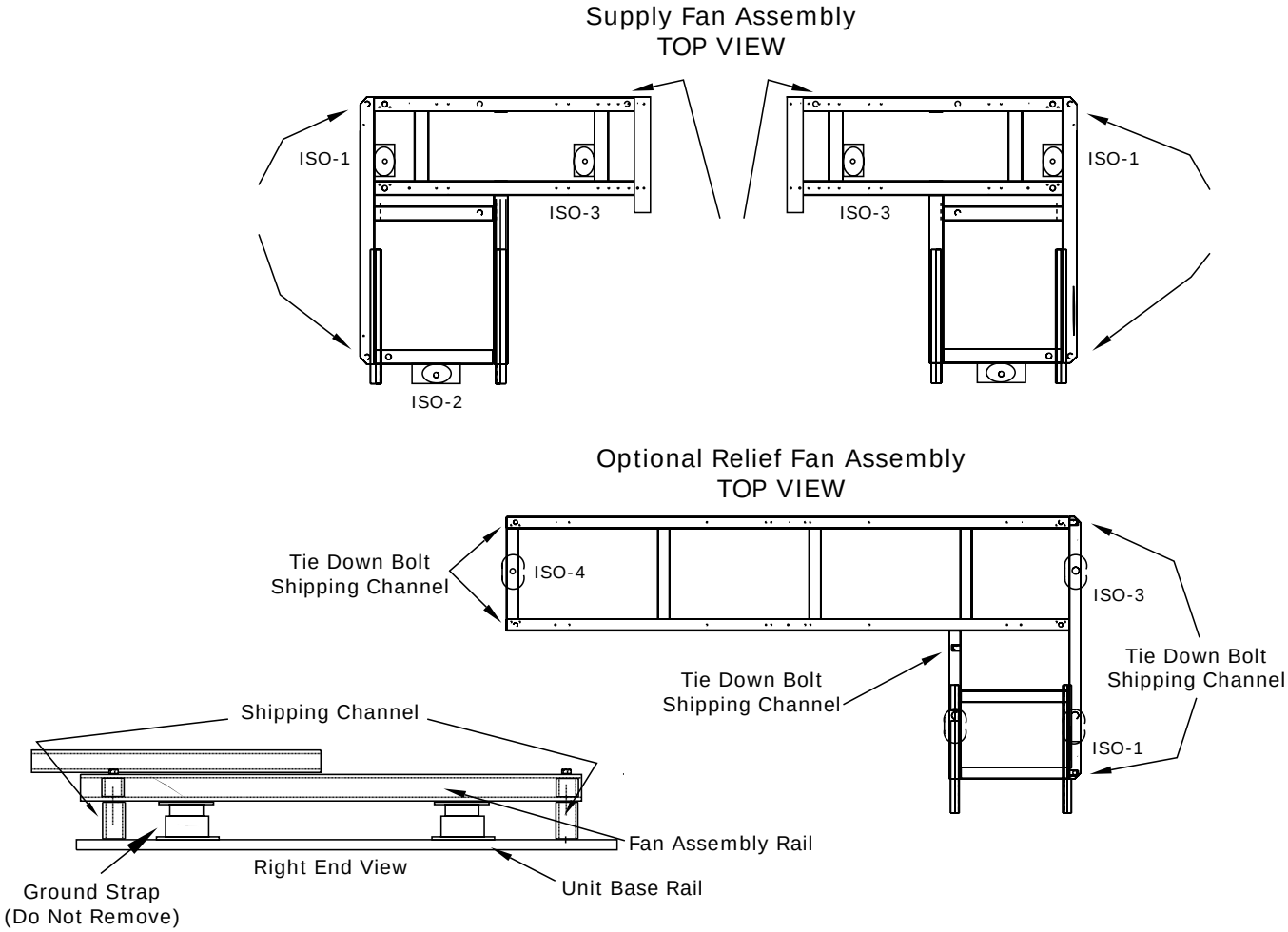

Figure 19. Removing return fan assembly shipping hardware (20 to 75 ton)

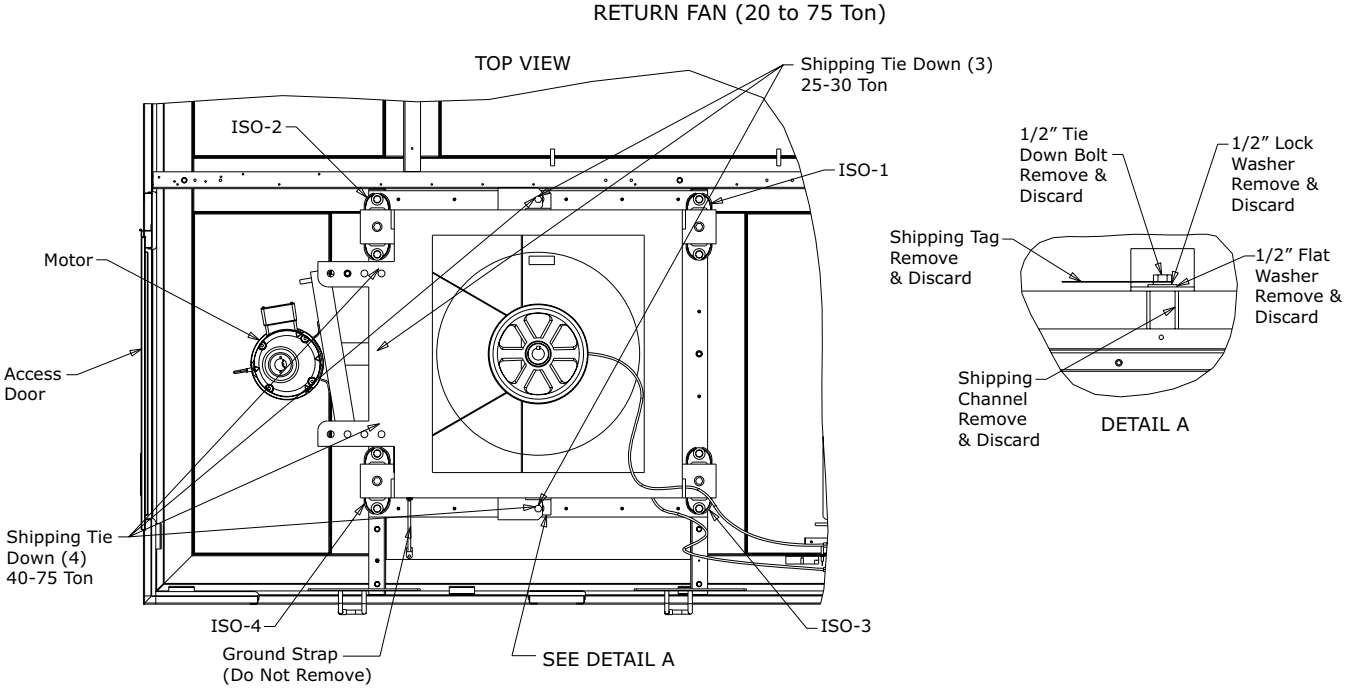

Wireless Communication Interface (WCI)

The wireless communication interface is located in the return section of the unit when a return fan is not installed. This provides wireless access to the building through the return duct work.

O/A Sensor and Tubing Installation

An Outside Air Pressure Sensor is shipped with all units designed to operate on variable air volume applications, units equipped with a return fan, or units with 100% modulating relief with Statitrac.

On VAV systems, a duct pressure transducer and the outside air sensor is used to control the discharge duct static pressure to within a customer-specified parameter. On VAV units equipped with 100% modulating relief with Statitrac, a space pressure transducer (3U62) and the outside air sensor is used to control the relief fan and dampers to relieve static pressure to within a customer-specified parameter, within the controlled space.

On units equipped with a return fan, a return pressure transducer (3U106) is connected to the O/A sensor for comparison with return plenum pressure.

Use the following steps and images to install the sensor and the pneumatic tubing.

1. Remove the O/A pressure sensor kit located inside the filter section. The kit contains the following items:
   a. O/A static pressure sensor with slotted mounting bracket
   b. 50 ft. 3/16" O.D. pneumatic tubing
   c. Mounting hardware
2. Using two #10-32 x 1¾" screws provided, install the sensor's mounting bracket to the factory-installed bracket (near the filter section).
3. Using the #10-32 x ½" screws provided, install the O/A static pressure sensor vertically to the sensor bracket.
4. Remove the dust cap from the tubing connector located below the sensor in the vertical support.
5. Attach one end of the 3/16" O.D. factory-provided pneumatic tubing to the sensor's top port, and the other end of the tubing to the connector in the vertical support. Note that most of the tubing is not needed.

   Note: *Use only what is required and discard excess tubing.*

Units with Statitrac

1. Open the filter access door and locate the Space Pressure and Duct Supply Pressure control devices, see the following image for specific location. There are three tube connectors mounted on the left of the solenoid and transducers.
2. Connect one end of the field provided 3/16" O.D. pneumatic tubing for the space pressurization control to the bottom fitting.
3. Route the opposite end of the tubing to a suitable location inside the building. This location should be the largest open area that will not be affected by sudden static pressure changes.

Figure 20. Pressure sensing

Outside Air Sensing Kit

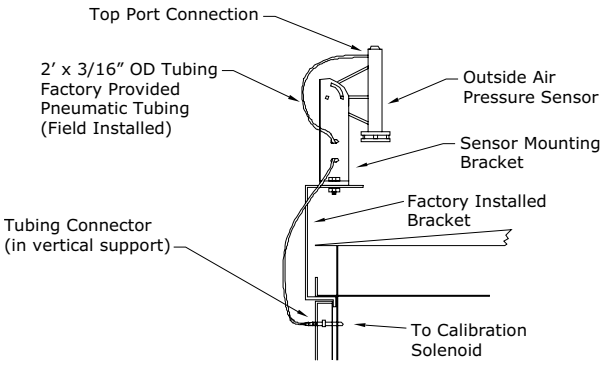

Duct, Space and Return Plenum Pressure Transducer Tubing Schematic

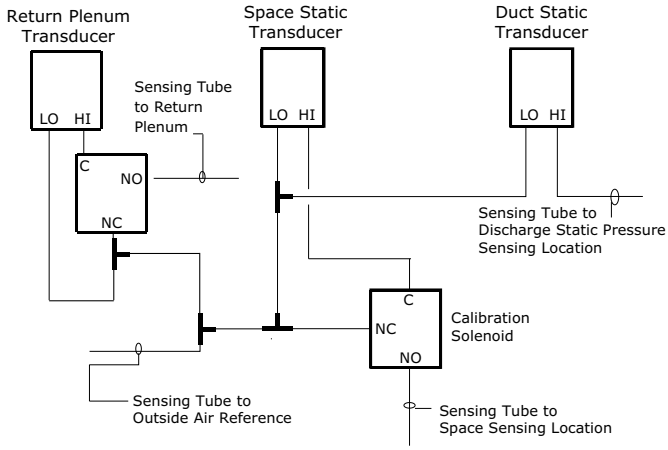

Pressure Tubing Description	Tubing Color
High pressure Pre-Evap filter	Blue
Low Pressure Pre-Evap filter	Green
High Pressure Final Filter	White
Low Pressure Final Filter	Black
High Pressure Traq	Purple
Low Pressure Traq	Yellow
Supply air High	Red
Return Air High	Clear
Reference (wind bird) Pressure	Orange

Duct Staic Pressure Control

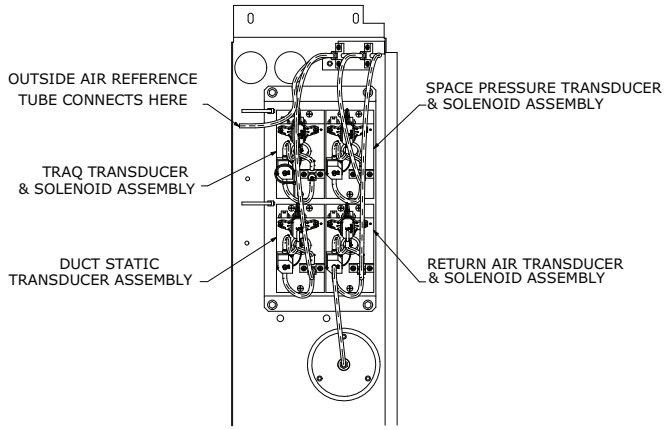

Gas Heat Units (SFH_)

All internal gas piping is factory-installed and pressure leak-tested before shipment. Once the unit is set into place, the gas supply line must be field-connected to the elbow located inside the gas heat control compartments.

⚠ WARNING

Hazardous Gases and Flammable Vapors!

Failure to observe the following instructions could result in exposure to hazardous gases, fuel substances, or substances from incomplete combustion, which could result in death or serious injury. The state of California has determined that these substances may cause cancer, birth defects, or other reproductive harm.

Improper installation, adjustment, alteration, service or use of this product could cause flammable mixtures or lead to excessive carbon monoxide. To avoid hazardous gases and flammable vapors follow proper installation and setup of this product and all warnings as provided in this manual.

⚠ WARNING

Explosion Hazard!

Failure to properly regulate pressure could result in a violent explosion, which could result in death, serious injury, or equipment or property-only-damage.

When using dry nitrogen cylinders for pressurizing units for leak testing, always provide a pressure regulator on the cylinder to prevent excessively high unit pressures. Never pressurize unit above the maximum recommended unit test pressure as specified in applicable unit literature.

Access holes are provided on the unit as illustrated in to accommodate a side or bottom pipe entry on 20–75 ton units and in on 90–130 ton units.

Following the guidelines listed below will enhance both the installation and operation of the furnace.

Note: *In the absence of local codes, the installation must conform with the American National Standard Z223-1a of the National Fuel Gas Code, (latest edition).*

1. To assure sufficient gas pressure at the unit, use Table 14, p. 42 as a guide to determine the appropriate gas pipe size for the unit heating capacity listed on the unit nameplate.
2. If a gas line already exists, verify that it is sized large enough to handle the additional furnace capacity before connecting to it.
3. Take all branch piping from any main gas line from the top at 90 degrees or at 45 degrees to prevent moisture from being drawn in with the gas.
4. Ensure that all piping connections are adequately coated with joint sealant and properly tightened. Use a piping compound that is resistant to liquid petroleum gases.
5. Provide a drip leg near the unit.
6. Install a pressure regulator at the unit that is adequate to maintain 7" w.c. for natural gas while the furnace is operating at full capacity.

Important: *Gas pressure in excess of 14" w.c. or 0.5 psig will damage the gas train.*

NOTICE

Gas Valve Damage!

Failure to follow instructions below could result in gas valve damage from incorrect gas pressures, irregular pulsating flame patterns, burner rumble, and potential flame outages.

Use a pressure regulator to properly regulate gas pressure. DO NOT oversize the regulator.

Failure to use a pressure regulating device will result in incorrect gas pressure, which can cause erratic operation due to gas pressure fluctuations as well as damage the gas valve. Oversizing the regulator will cause irregular pulsating flame patterns, burner rumble, potential flame outages, and possible gas valve damage.

If a single pressure regulator serves more than one rooftop unit, it must be sized to ensure that the inlet gas pressure does not fall below 7" w.c. with all the furnaces operating at full capacity. The gas pressure must not exceed 14" w.c. when the furnaces are off.

7. Provide adequate support for all field installed gas piping to avoid stressing the gas train and controls.

⚠ WARNING

Explosion Hazard!

Failure to follow safe leak test procedures below could result in death or serious injury or equipment or property-only-damage.

Never use an open flame to detect gas leaks. Use a leak test solution for leak testing.

8. Leak test the gas supply line using a soap-and-water solution or equivalent before connecting it to the gas train.
9. Check the supply pressure before connecting it to the unit to prevent possible gas valve damage and the unsafe operating conditions that will result.

   Note: *Do not rely on the gas train shutoff valves to isolate the unit while conducting gas pressure/leak test. These valves are not designed to withstand pressures in excess of 14" w.c. or 0.5 psig.*

Connecting the Gas Supply Line to the Furnace Gas Train

Follow the steps below to complete the installation between the supply gas line and the furnace. Refer to Figure 21, p. 44 through , for the appropriate gas train configuration.

1. Connect the supply gas piping using a “ground-joint” type union to the furnace gas train and check for leaks.
2. Adjust the inlet supply pressure to the recommended 7" to 14" w.c. parameter for natural gas.

3. Ensure that the piping is adequately supported to avoid gas train stress.

Table 14. Sizing natural gas pipe mains and branches

Gas SupplyPipe Run (ft)	Gas Input (Cubic Feet/Hour)					
	1¼" Pipe	1½" Pipe	2" Pipe	2½" Pipe	3" Pipe	4" Pipe
10	1,060	1,580	3,050	4,860	8,580	17,500
20	726	1,090	2,090	3,340	5,900	12,000
30	583	873	1,680	2,680	4,740	9,660
40	499	747	1,440	2,290	4,050	8,270
50	442	662	1,280	2,030	3,590	7,330
60	400	600	1,160	1,840	3,260	6,640
70	368	552	1,060	1,690	3,000	6,110
80	343	514	989	1,580	2,790	5,680
90	322	482	928	1,480	2,610	5,330
100	304	455	877	1,400	2,470	5,040
125	269	403	777	1,240	2,190	4,460
150	244	366	704	1,120	1,980	4,050
175	224	336	648	1,030	1,820	3,720
200	209	313	602	960	1,700	3,460

Notes:

1. Table is based upon specific gravity of 0.60. Refer to the latest edition of the National Fuel Gas Code, Z223.1, unless superseded by local gas codes.
2. If more than one unit is served by the same main gas supply, consider the total gas input (cubic feet/hr.) and the total length when determining the appropriate gas pipe size.
3. Obtain the Specific Gravity and BTU/Cu.Ft. from the gas company.
4. The following example demonstrates the considerations necessary when determining the actual pipe size:
   Example: A 40' pipe run is needed to connect a unit with a 850 MBH furnace to a natural gas supply having a rating of 1,000 BTU/Cu.Ft. and a specific gravity of 0.60
   Cu.Ft/Hour = Furnace MBH Input
   Gas BTU/Cu.Ft. X Multiplier Table 15, p. 42
   Cu.Ft/Hour = 850
   The above table indicates that a 2" pipe is required.

Table 15. Specific gravity multipliers

Specific Gravity	Multiplier
0.50	1.10
0.55	1.04
0.60	1.00
0.65	0.96

Table 16. Gas heating capacity altitude correction factors

	Altitude (Ft.)						
	Sea Level To 2000	2001 to 2500	2501 to 3500	3501 to 4500	4501 to 5500	5501 to 6500	6501 to 7500
Capacity Multiplier	1.00	.92	.88	.84	.80	.76	.72

Note: Correction factors are per ANSO Z223.1/NFAP 54. Local codes may supersede.

Table 17. Natural gas – 2-stage and modulating gas heat settings

Natural Gas							
Burner Size	Low Fire			High Fire		Shutter Setting	Ratio Regulator Turns
	VDC Input Signal (a)	P0	P1	VDC Input Signal	P2		
235 MBH 2-stg	n/a	2030	2030	10	3250	0.5	3 3/8
350 MBH 2-stg	n/a	2180	2180	10	3380	1.5	3 1/2
500 MBH 2-stg	n/a	2700	2700	10	4630	0.5 – 1	3 1/4
500 MBH Mod	0	2000	1900	10	46300	1	3 1/4
800 MBH 2-stg(b)	n/a	2270	2270	10	3900	3.5 – 4	3 1/4
800 MBH Mod(b)	0	2000	1100	10	3900	3.5	3 1/4
850 MBH 2-stg	n/a	2270	2270	10	4100	3.5	3 1/4
850 MBH Mod	0	2000	1100	10	4100	3.5	3 1/4
1000 MBH 2-stg	n/a	2650	2650	10	5000	3.5 – 4	3 1/4
1000 MBH Mod	0	2000	1100	10	5050	3.5 – 4	3 1/4

Note: *P0, P1, and P2 are fan speed settings in the Seimens controller. The default speeds have been preset at the factory and normally do not need field adjustment.*

(a) Binary input for 2-stage
(b) 800MBH is Horizontal Discharge. MBH is listed on gas heat rating plate.

Table 18. LP gas – 2-stage and modulating gas heat settings

Propane								
Burner Size	Low Fire			High Fire		Shutter Setting	Ratio Regulator Turns	Orifice Size
	VDC Input Signal (a)	P0	P1	VDC Input Signal	P2			
235 MBH 2-stg	n/a	2000	1940	10	3420	1.5	4 1/4	0.302
350 MBH 2-stg	n/a	2050	2050	10	3450	1.5	4 1/4	0.396
500 MBH 2-stg	n/a	2650	2650	10	4730	1	4 1/8	0.396
500 MBH Mod	0	2000	1750	10	4730	1	4 1/8	0.396
800 MBH 2-stg(b)	n/a	2100	2100	10	3690	2	3	0.516
800 MBH Mod (b)	0	2000	1150	10	3690	2	3	0.516
850 MBH 2-stg	n/a	2290	2290	10	3930	1.5	3	0.516
850 MBH Mod	0	2000	1150	10	3920	1 – 1.5	3	0.516
1000 MBH 2-stg	n/a	2570	2570	10	4430	1	3	0.516
1000 MBH Mod	0	2000	1150	10	4430	1	3	0.516

Note: *P0, P1, and P2 are fan speed settings in the Seimens controller. The default speeds have been preset at the factory for natural gas settings.*

(a) Binary input for 2-stage
(b) 800MBH is Horizontal Discharge. MBH is listed on gas heat rating plate.

Table 19. Natural gas – ultra modulating gas heat settings

Natural Gas				
Heater Size	High Fire		Low Fire	
	VDC Input Signal	Fan Speed % FHi (default)	VDC Input Signal	Fan Speed % Flo (default)
500 MBH	10	41%	2	10%
800 MBH[a]	10	48%	2	10%
850 MBH	10	50%	2	10%
1000 MBH	10	72%	2	10%

[a] 800MBH is Horizontal Discharge. MBH is listed on gas heat rating plate.

Note: *The FHi fan speed setting on the SCEBM is set to the default Natural Gas settings. Fan speed is adjustable by calling Technical Support.*

Table 20. LP gas – ultra modulating gas heat settings

Propane				
Heater Size	High Fire		Low Fire	
	VDC Input Signal	Fan Speed % FHi (default)	VDC Input Signal	Fan Speed % Flo (default)
500 MBH	10	34%	2	10%
800 MBH[a]	10	46%	2	10%
850 MBH	10	48%	2	10%
1000 MBH	10	61%	2	10%

[a] 800MBH is Horizontal Discharge. MBH is listed on gas heat rating plate.

Note: *The FHi fan speed setting on the SCEBM is set to the default Natural Gas settings. Fan speed is adjustable by calling Technical Support.*

Figure 21. 2-stage and Mod gas train for 235 to 500 MBh

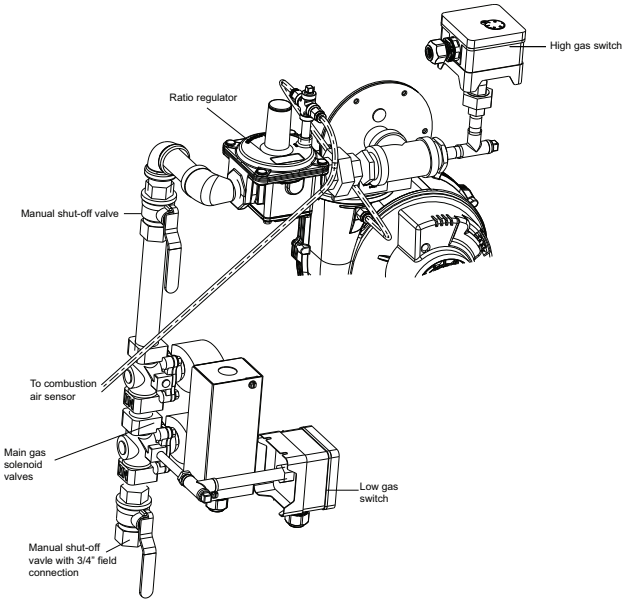

Figure 22. 2-stage and Mod gas train for 850 MBh

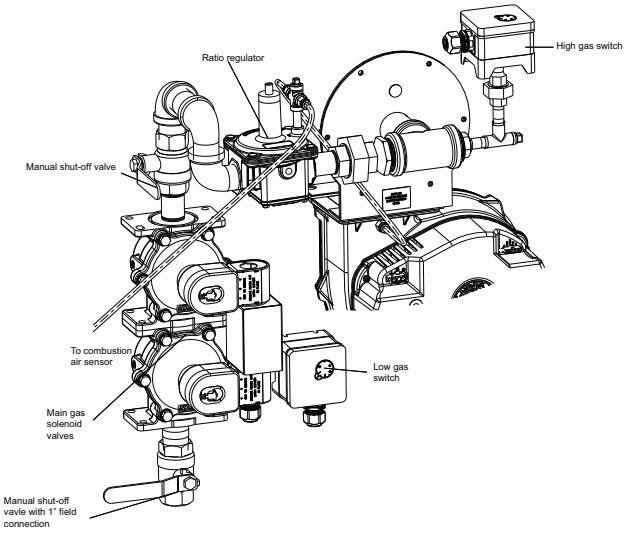

Figure 23. 2-stage and Mod gas train for 1000 MBh

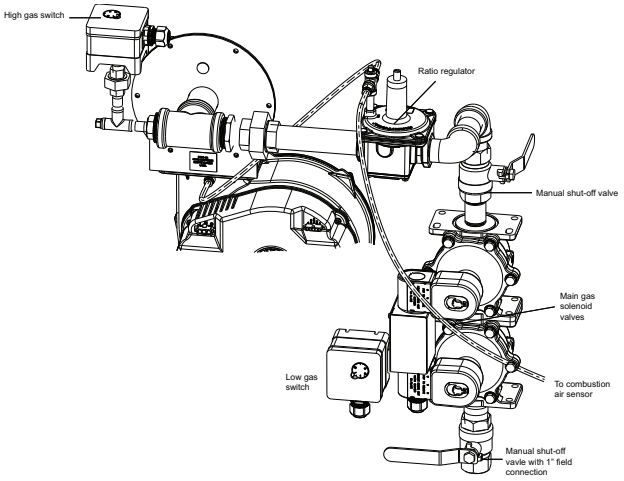

Figure 24. Ultra modulating gas train for 500 to 850 MBh

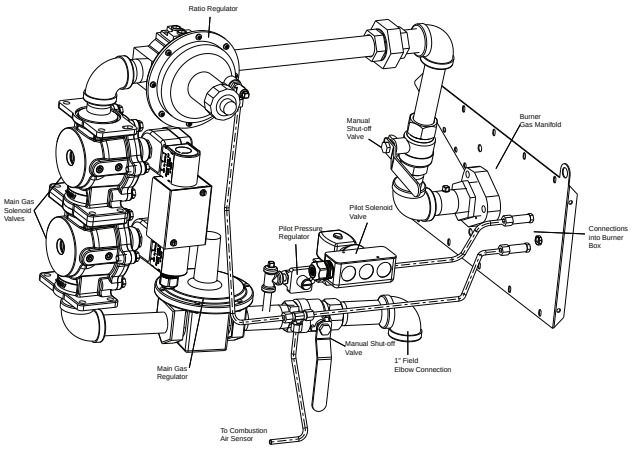

Figure 25. Ultra modulating 1000 MBh

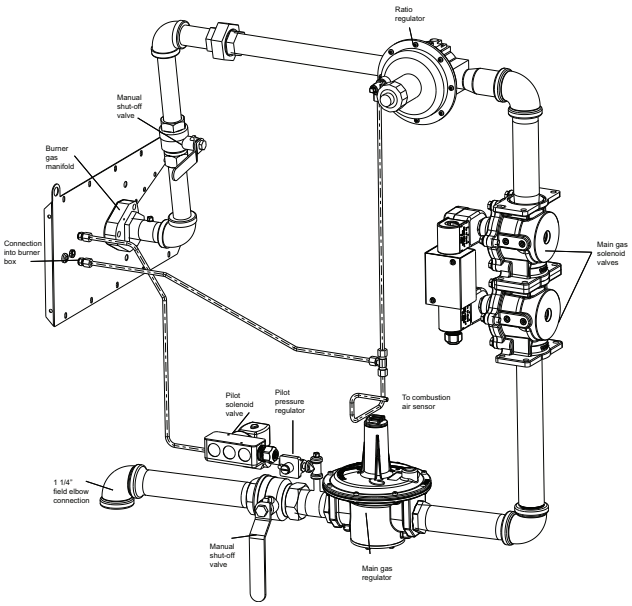

Flue Assembly Installation

1. Locate the flue assembly and the extension (refer to Figure 26, p. 46 for extension usage) in the ship with section of the unit.
2. Install the flue extension onto the flue assembly as shown in Figure 26, p. 46.
3. Slide the pipe clamp onto the heater flue tube located inside the heater compartment.
4. Insert the tube on the flue assembly into the hole located in the vertical support for the heat section.
5. Butt both tube sections together and center the pipe clamp over joint.
6. Using the pre-punch holes in the flue assembly, extension, and the vertical support, install the appropriate number of mounting brackets (Refer to the installation instructions that ship with the flue assembly.)

Figure 26. Flue assembly

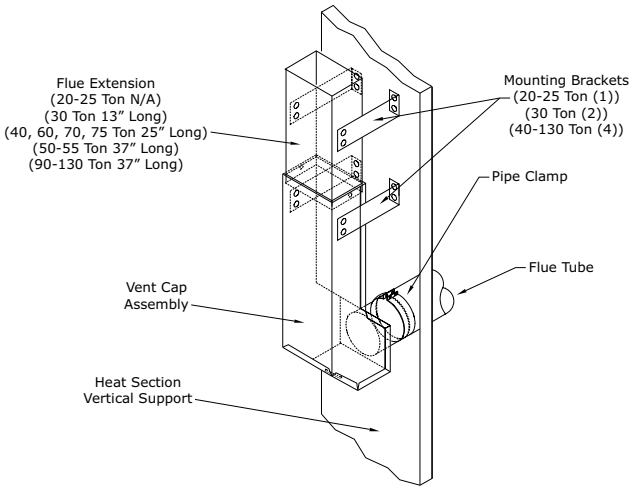

General Coil Piping and Connection Recommendations

Proper installation, piping, and trapping is necessary to ensure satisfactory coil operation and to prevent operational damage:

Note: *The contractor is responsible for supplying the installation hardware.*

☐ Support all piping independently of the coils.

☐ Provide swing joints or flexible fittings on all connections that are adjacent to heating coils to absorb thermal expansion and contraction strains.

☐ Install factory supplied control valves (valves ship separately).

NOTICE

Connection Leaks!

Failure to follow instructions below could result in damage to the coil header and cause connection leaks.

Use a backup wrench when attaching piping to coils with copper headers. Do not use brass connectors because they distort easily.

☐ When attaching the piping to the coil header, make the connection only tight enough to prevent leaks. Maximum recommended torque is 200 foot-pounds.

NOTICE

Over Tightening!

Failure to follow instructions below could result in damage to the coil header.

Do not use teflon-based products for any field connections because their high lubricity could allow connections to be over tightened.

☐ Use pipe sealer on all thread connections.

NOTICE

Leakage!

Failure to follow instructions below could result in equipment damage.

Properly seal all penetrations in unit casing from inner to outer panel in order to prevent unconditioned air from entering the module, as well as prevent water from infiltrating the insulation.

☐ After completing the piping connections, seal around pipe from inner panel to outer panel.

Hot Water Heat Units (SLH_)

Hot water heating coils are factory installed inside the heater section of the unit. Once the unit is set into place, the hot water piping and the factory provided 3–way modulating valve must be installed. The valve can be installed inside the heat section or near the unit. If the valve is installed in a remote location, use field supplied wiring to extend the control wires from the heater section to the valve. Two access holes are provided in the unit base as illustrated in .

Use the following guidelines to enhance both the installation and operation of the "wet heat" system.

Figure 27, p. 48 illustrates the recommended piping configuration for the hot water coil. Table 21, p. 47 lists the coil connection sizes.

Note: *The valve actuators are not waterproof. Failure to protect the valve from moisture may result in the loss of heating control.*

1. Support all field-installed piping independently from the heating coil.
2. Use swing joints or flexible connectors adjacent to the heating coil. (These devices will absorb the strains of expansion and contraction).
3. All return lines and fittings must be equal to the diameter of the "outlet" connection on the hot water coil.
4. Install a "Gate" type valve in the supply branch line as close as possible to the hot water main and upstream of any other device or takeoff.
5. Install a "Gate" type valve in the return branch line as close as possible to the return main and down stream of any other device.
6. Install a strainer in the hot water supply branch as shown in Figure 27, p. 48.
7. Install the 3-way valve in an upright position, piped for valve seating against the flow. Ensure that the valve location lends itself to serviceability.
8. The Type "W" hot water coil used in SLH_ units is self-venting only when the tube water velocity exceeds 1.5 feet per second (fps). If the tube velocity is less than 1.5 feet per second, either:
   a. install an automatic air vent at the top of the return header, using the tapped pipe connection

or,

b. vent the coil from the top of the return header down to the return piping. At the vent connection, size the return piping to provide sufficient water velocity.

9. Install a “Globe” type valve in the Bypass line as shown in Figure 27, p. 48.

Steam Heat Units

Steam heating coils are factory installed inside the heater section of the unit. The coils are pitched within the units to provide the proper condensate flow from the coil. To maintain the designed degree of pitch for the coil, the unit must be level.

Once the unit is set into place, the steam piping and the factory provided 2–way modulating valve must be installed. The valve can be installed inside the heater section or near the unit. If the valve is installed in a remote location, use field supplied wiring to extend the control wires from the heater section to the valve. Two access holes are provided in the unit base as illustrated in .

Use the following guidelines to enhance both the installation and operation of the “wet heat” system. Figure 29, p. 49 and Figure 30, p. 49 illustrates the recommended piping configurations for the steam coil. lists the coil connection sizes.

Note: *The valve actuators are not waterproof. Failure to protect the valve from moisture may result in the loss of heating control.*

1. Support all field-installed piping independently from the heating coil.
2. Use swing joints or flexible connectors adjacent to the heating coil. (These devices will absorb the strains of expansion and contraction.)
3. Install the 2-way valve in an upright position. Ensure that the valve's location lends itself to serviceability.
4. Pitch the supply and return steam piping downward 1" per 10' of run in the direction of flow.
5. All return lines and fittings must be equal to the diameter of the “outlet” connection on the steam coil(s). If the steam trap connection is smaller that the coil “outlet” diameter, reduce the pipe size between the strainer and the steam trap connections only.
6. Install a 1/2" 15 degree swing-check vacuum breaker at the top of the return coil header using the tapped pipe connection. Position the vacuum breaker as close to the coil as possible.

   Note: *Vacuum breakers should have extended lines from the vent ports to the atmosphere or connect each vent line to the return pipe on the discharge side of the steam traps.*

7. Install a “Gate” type valve in the supply branch line as close as possible to the steam main and upstream of any other device.
8. Install a “Gate” type valve in the return branch line as close as possible to the condensate return main and downstream of any other device.
9. Install a strainer as close as possible to the inlet of the control valve and steam trap(s). Steam trap selection should be based on the maximum possible condensate flow and the recommended load factors.
10. Install a Float-and-Thermostatic (FT) type trap to maintain proper flow. It provides gravity drains and continuous discharge operation. FT type traps are required if the system includes either of the following:

    a. an atmospheric pressure/gravity condensate return

    or

    b. a potentially low pressure steam supply.

11. Position the outlet or discharge port of the steam trap at least 12" below the outlet connection on the coil(s). This will provide adequate hydrostatic head pressure to overcome the trap losses and assure complete condensate removal.

40 to 130 ton units

If two steam coils are stacked together, they must be piped in a parallel arrangement. The steps listed below should be used in addition to the previous steps.Figure 30, p. 49 illustrates the recommended piping configuration for the steam coils.

a. Install a strainer in each return line before the steam trap.

b. Trap each steam coil separately as described in Step 10Installation_Steam Heat Units and Step 11Installation_Steam Heat Units to prevent condensate backup in one or both coils.

c. In order to prevent condensate backup in the piping header supplying both coil sections, a drain must be installed utilizing a strainer and a steam trap as illustrated in Figure 30, p. 49.

Table 21. Connection sizes for hot water and steam coil

Unit Model and Size	Heat Section Capacity	Coil Connections (diameter in inches)	
		Supply	Return
SLH_-20 to 130	High or Low Heat	2½"	2½"
SSH_-20 to 30	High or Low Heat	3"	1¼"
SSH_-40 to 75	High Heat Low Heat	3"	1½"
SSH_-90 to 130	Low Heat(c)	1½”	1"

Notes:

1. Type W coils, with center offset headers, are used in SLH* units; type NS coils are used in SSH* units
2. See Digit 9 of the unit model number to determine the heating capacity.
3. SSH*—40 to 75 ton units have multiple headers.

Figure 27. Hot water piping (20 to 75 ton)

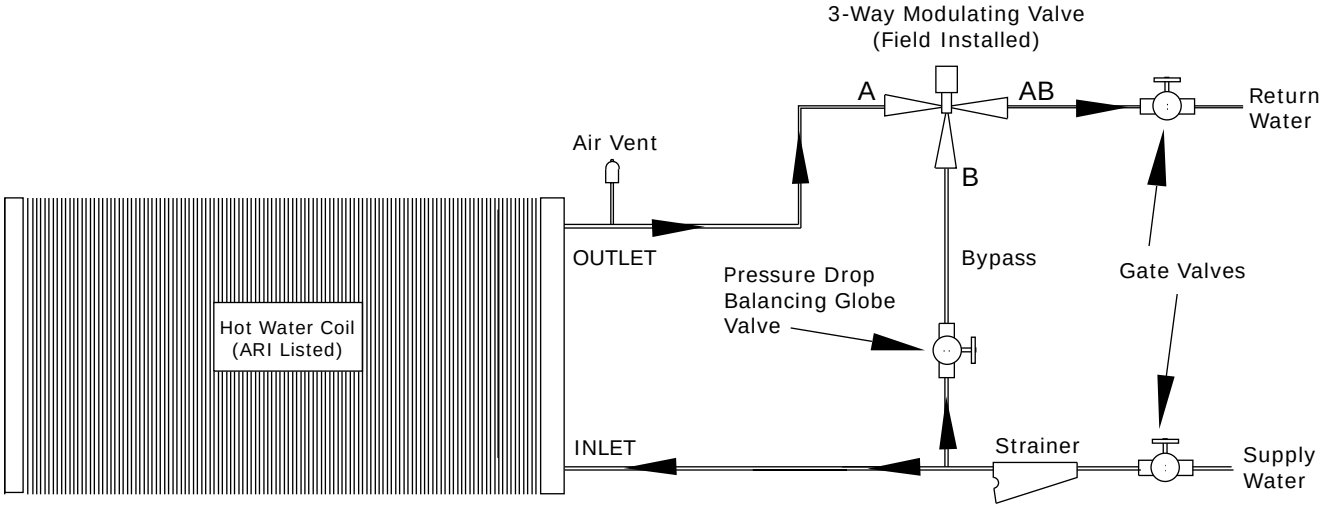

Figure 28. Hot water piping (90 to 130 ton)

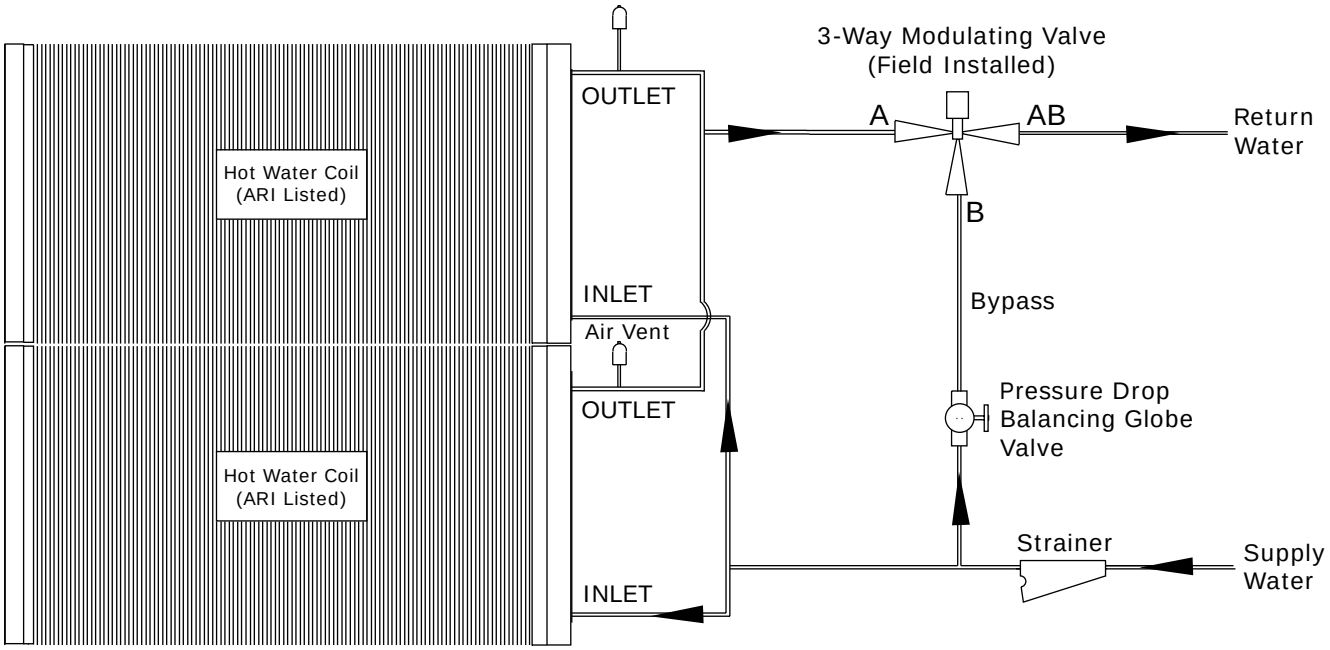

Figure 29. Steam coil piping (20 to 36 ton)

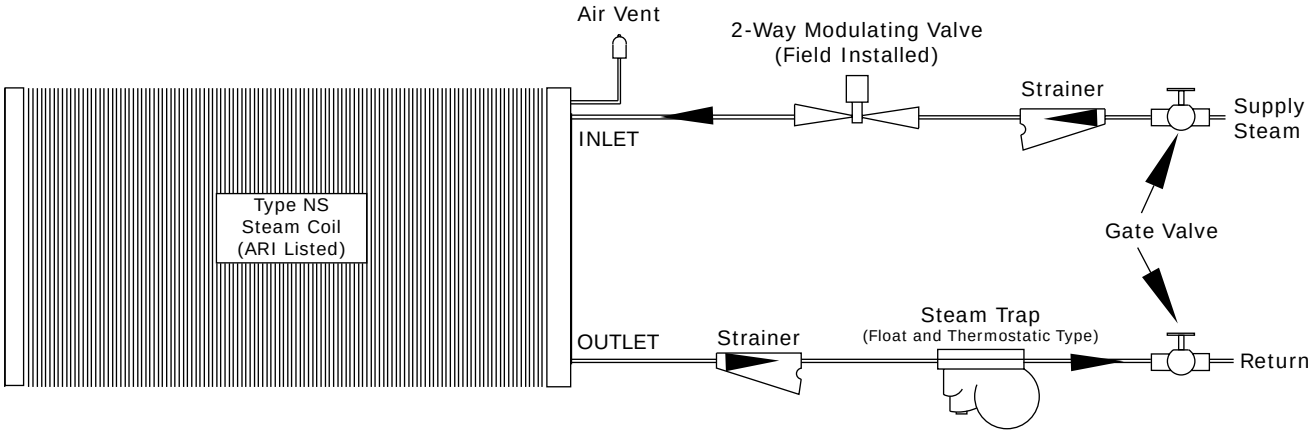

Figure 30. Steam coil piping (40 to 130 ton)

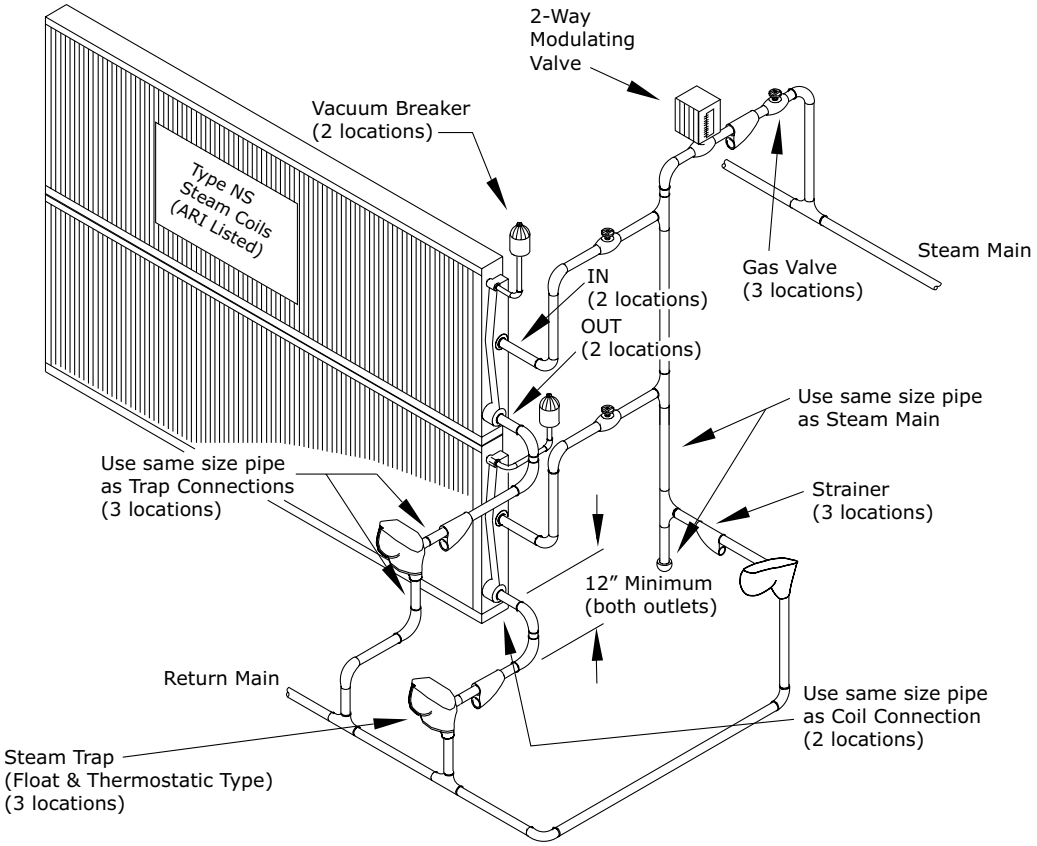

Disconnect Switch with External Handle

Units ordered with a factory mounted disconnect switch comes equipped with an externally mounted handle. This allows the operator to disconnect power from the unit without having to open the control panel door. The handle has three positions:

- “ON” - Indicates that the disconnect switch is closed, allowing the main power supply to be applied at the unit.
- “OFF” - Indicates that the disconnect switch is open, interrupting the main power supply to the unit controls.
- “RESET/LOCK” - Turning the handle to this position resets or disconnects the device. To disconnect, the handle must be turned to the Reset/Lock position. Pulling the spring-loaded thumb key out, so the lock shackle can be placed between the handle and the

thumb key, locks the handle so the unit cannot be energized. Turning the handle to this position also releases the handle from the disconnect switch, allowing the control panel door to be opened.

⚠ WARNING

Hazardous Voltage w/Capacitors!

Failure to disconnect power and discharge capacitors before servicing could result in death or serious injury.

Disconnect all electric power, including remote disconnects and discharge all motor start/run capacitors before servicing. Follow proper lockout/tagout procedures to ensure the power cannot be inadvertently energized. For variable frequency drives or other energy storing components provided by Trane or others, refer to the appropriate manufacturer's literature for allowable waiting periods for discharge of capacitors. Verify with a CAT III or IV voltmeter rated per NFPA 70E that all capacitors have discharged.

The handle can be locked in the "OFF" position by completing the following steps (see Figure 31, p. 50):

1. While holding the handle in the "OFF" position, push the spring loaded thumb key, attached to the handle, into the base slot.
2. Place the lock shackle between the handle and the thumb key. This will prevent it from springing out of position.

Figure 31. Disconnect switch external handle

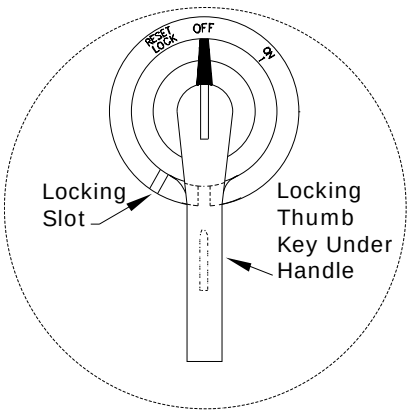

Note: *All field installed wiring must conform to NEC guidelines as well as State and Local codes.*

An overall layout of the field required power wiring is illustrated in . To ensure that the unit supply power wiring is properly sized and installed, follow these guidelines:

⚠ WARNING

Live Electrical Components!

Failure to follow all electrical safety precautions when exposed to live electrical components could result in death or serious injury.

When it is necessary to work with live electrical components, have a qualified licensed electrician or other individual who has been properly trained in handling live electrical components perform these tasks.

NOTICE

Use Copper Conductors Only!

Failure to use copper conductors could result in equipment damage as the equipment was not designed or qualified to accept other types of conductors.

⚠ WARNING

Hot Surface!

Failure to follow instructions below could result in severe burns.

Do not touch the heat exchanger board with bare hands while disassembling the pan. Allow to cool and put on proper Personal Protective Equipment (PPE) before servicing.

- Verify that the power supply available is compatible with the unit nameplate rating for all components. The available power supply must be within 10% of the rated voltage stamped on the nameplate.
- Use only copper conductors to connect the 3-phase power supply to the unit.

Electric Heat Units (SEH_)

SEH_ (20-75 ton) electric heat units operating on 200/230 volts require two power supplies as illustrated in . Unless the unit was ordered with the optional factory mounted, non-fused disconnect switches, two field-supplied disconnect switches must be installed per NEC requirements. The power wires for the electric heat are routed into the electric heat control panel using the through-the-base access provided in the heating section. Refer to the appropriate illustration in , (unit base layout and electrical entrance diagram), for dimensional data. For 20-130 ton units operating on 460/575 volts, only one field installed disconnect switch is required, as illustrated in and .

Use the information provided in Service Sizing data and the "Power Wire Sizing & Protection Device Equations," to determine the appropriate wire size and Maximum Over current Protection for the heaters/unit.

Note: *Each power supply must be protected from short circuit and ground fault conditions. To comply with NEC, protection devices must be sized according to the "Maximum Over current Protection" (MOP) or "Recommended Dual Element" (RDE) fuse size data on the unit nameplate.*

Provide grounding for the supply power circuit in the electric heat control box.

Main Unit Power Wiring

to lists the field connection wire ranges for both the main power terminal block (2XD1 on 20-75T units / 1XD1 on 90-130T units) and the optional main power disconnect switch (2QB1 on 20-75T units / 1QB1 on 90-130T units). Service Sizing Data lists the component electrical data.

The electrical service must be protected from over current and short circuit conditions in accordance with NEC requirements. Protection devices must be sized according to the electrical data on the nameplate. Refer to the equations listed in the product catalog to determine the following:

- the appropriate electrical service wire size based on "Minimum Circuit Ampacity" (MCA)
- the "Maximum Over Current Protection" (MOP) device
- the "Recommended Dual Element fuse size" (RDE)

⚠ WARNING

Proper Field Wiring and Grounding Required!

Failure to follow code could result in death or serious injury.

All field wiring MUST be performed by qualified personnel. Improperly installed and grounded field wiring poses FIRE and ELECTROCUTION hazards. To avoid these hazards, you MUST follow requirements for field wiring installation and grounding as described in NEC and your local/state/national electrical codes.

The location of the electrical service entrance is illustrated in . It is important to complete the unit power wiring connections onto either the main terminal block (2XD1 on 20-75T units / 1XD1 on 90-130T units) or the factory mounted, non-fused disconnect switch (2XD1 on 20-75T units / 1XD1 on 90-130T units). . Refer to the diagrams that shipped with the unit for specific termination points.

Provide proper grounding for the unit in accordance with local and national codes.

Figure 32. Typical field power wiring (20 to 75 ton)

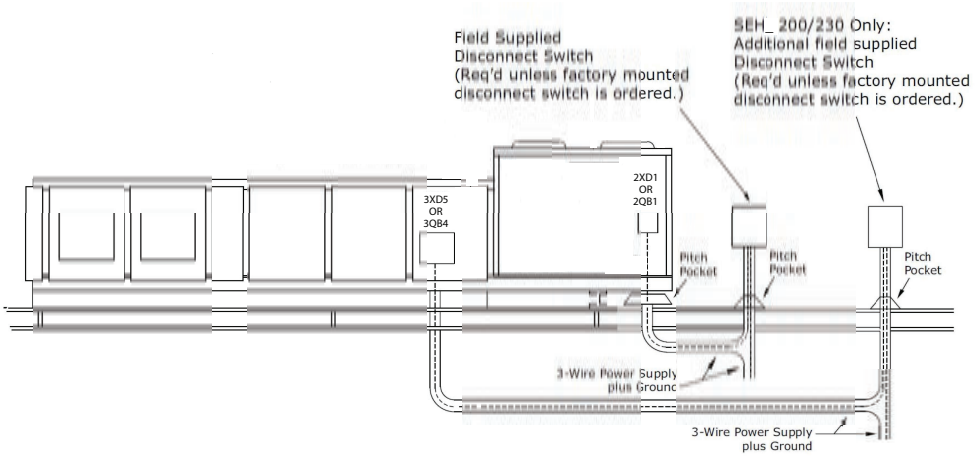

Figure 33. Typical field power wiring (90 to 130 ton)

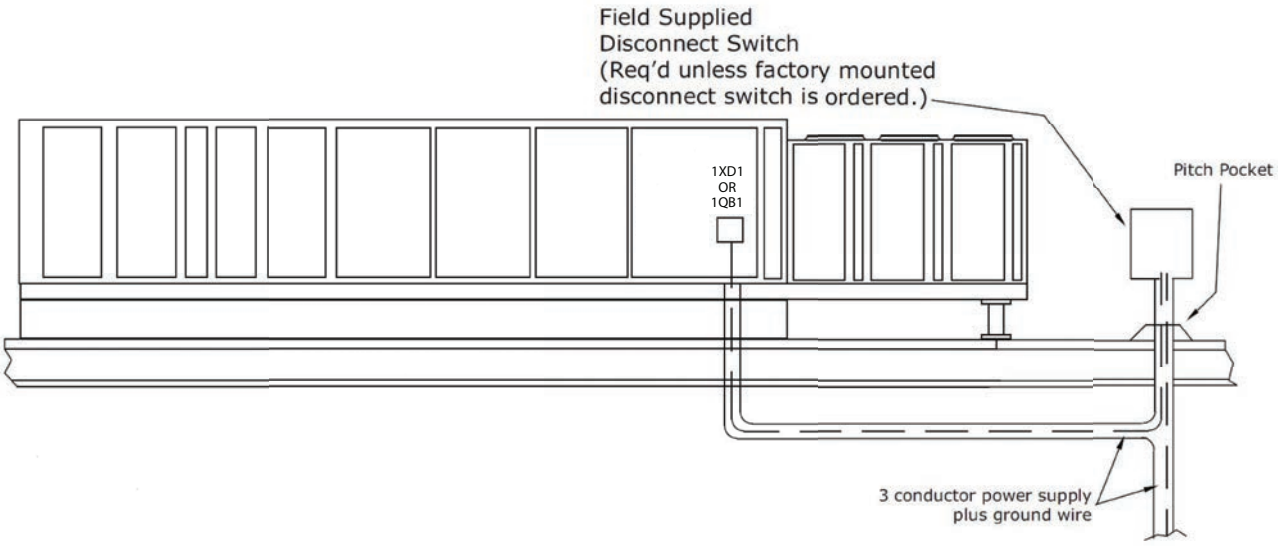

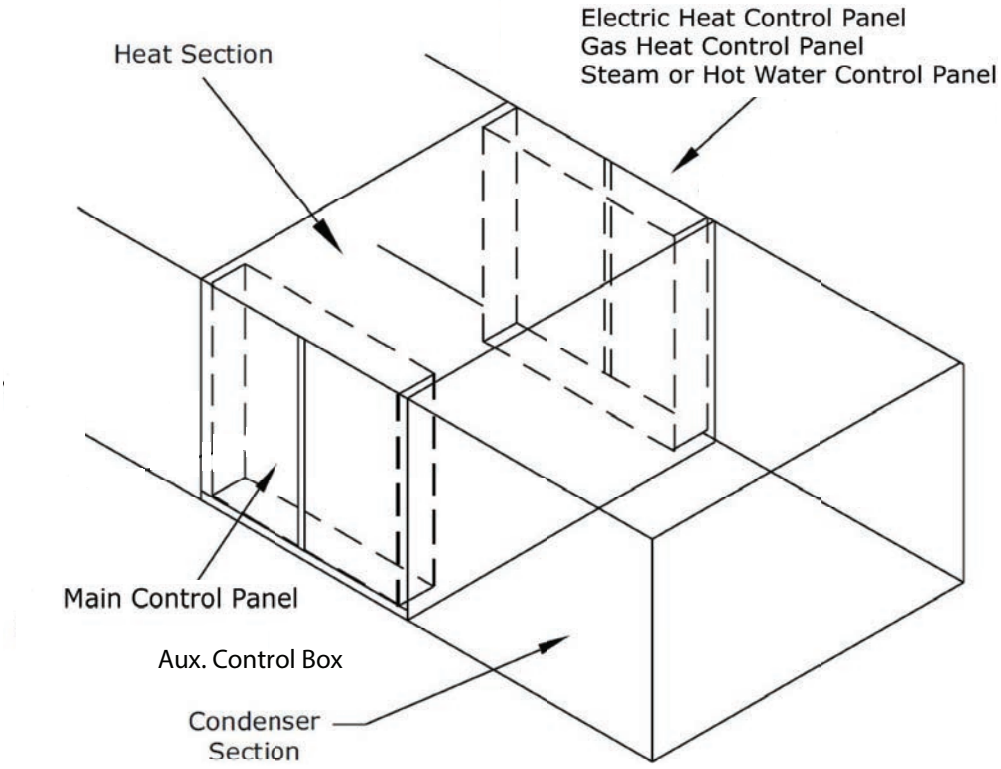

CUSTOMER CONNECTION WIRE RANGE			
NOTES:	**COMPONENT TYPE/SIZE**	**WIRE QTY PER PHASE**	**WIRE RANGE**
TERMINAL BLOCK AND STD SCCR DISCONNECT SWITCH SIZES ARE CALCULATED BY SELECTING THE SIZE GREATER THAN OR EQUAL TO 1.15 X (SUM OF UNIT LOADS). SEE UNIT LITERATURE FOR UNIT LOAD VALUES.	510A TERMINAL BLOCK	2	6 AWG - 250 kcmil
	760A TERMINAL BLOCK	2	4 AWG - 500 kcmil
	150A DISCONNECT SWITCH (STD SCCR)	1	14 AWG - 3/0 AWG
	250A DISCONNECT SWITCH (STD SCCR)	1	3/0 AWG - 350 kcmil [(a)]
	400A DISCONNECT SWITCH (STD SCCR)	2	2/0 AWG - 500 kcmil
	600A DISCONNECT SWITCH (STD SCCR)	2	2/0 AWG - 500 kcmil
HIGH SCCR DISCONNECT SWITCH SIZES ARE CALCULATED BY SELECTING THE SIZE GREATER THAN OR EQUAL TO 1.25 X (SUM OF UNIT LOADS). SEE UNIT LITERATURE FOR UNIT LOAD VALUES.	150A DISCONNECT SWITCH (HIGH SCCR)	1	14 AWG - 3/0 AWG
	250A DISCONNECT SWITCH (HIGH SCCR)	1	3/0 AWG - 350 kcmil [(a)]
	400A DISCONNECT SWITCH (HIGH SCCR)	2	2/0 AWG - 500 kcmil
	600A DISCONNECT SWITCH (HIGH SCCR)	2	2/0 AWG - 500 kcmil

[(a)] 250A DISCONNECT SWITCHES CAN ACCOMMODATE 4 AWG - 4/0 AWG IF LUG SCREWS ARE CHANGED TO S1A59551 KIT (PROVIDED WITH UNIT)

250A Disconnect switch wire binding screws

The 250A disconnect switch (standard and high SCCR) installed for main power connection accommodates 4 AWG – 350 kcmil wires on the "OFF" side. As shipped from the factory, the wire binding screws only accommodate 3/0 AWG – 350 kcmil wires. If 4 AWG – 2/0 AWG field power wiring is used, then the factory installed wire binding screws must be replaced with those that are provided with the kit installed near the disconnect switch (these screws should have a blue top surface). See the kit for instructions on changing the wire binding screws.

Electrical Service Sizing

To correctly size electrical service wiring for a unit, find the appropriate calculations listed below. Each type of unit has its own set of calculations for MCA (Minimum Circuit Ampacity), and MOP (Maximum Overcurrent Protection). Read the load definitions that follow and then find the appropriate set of calculations based on unit type.

Note: *Set 1 is for cooling only, cooling with gas heat, or cooling with hot water/steam heat units. Set 2 is for cooling with electric heat units*

Load Definitions: (To determine load values, see the Electrical Service Sizing Data Tables on the following page.)

LOAD1 = Current of the largest motor (compressor or fan motor)

LOAD2 = Sum of the currents of all remaining motors

LOAD3 = Current of electric heaters

LOAD4 = Any other load rated at 1 AMP or more

SAH_ (Cooling Only) units

SEH_ (Cooling with Electric Heat) units

SXH_ (Extended Casing Cooling Only) units

SLH_ and SSH_ (Cooling with Hydronic Heat) units

SFH_ (Cooling with Gas Heat) units

Load Definitions	
LOAD 1	Current (RLA, MRC, FLA or MOC) of the largest motor (compressor or fan motor)
LOAD 2	Sum of the currents (RLA, MRC, FLA or MOC) of all remaining motors
LOAD 3	Current of electric heaters
LOAD 4	Any other load rated at 1 amp or more

Load 4 — Control Power Transformer Loads for All Modes				
	200V	**230V**	**460V**	**575V**
20–75 ton units	10.0 Amps	9.0 Amps	4.5 Amps	3.5 Amps
90–130 ton units	—	—	9.0 Amps	7.0 Amps

Set 1: Cooling Only Rooftop Units and Cooling with Gas Heat or Hydronic Heat Rooftop Units

MCA = (1.25 x LOAD1) + LOAD2 + LOAD4

MOP = (2.25 x LOAD1) + LOAD2 + LOAD4

Select a fuse rating equal to the MOP value. If the MOP value does not equal a standard fuse size as listed in NEC 240-6, select the next lower standard fuse rating.

Note: *If selected MOP is less than the MCA, then select the lowest standard maximum fuse size which is equal to or larger than the MCA, provided the selected fuse size does not exceed 800 amps.*

Set 2: Rooftop units with Electric Heat

Single Source Power units (460V and 575V)

To arrive at the correct MCA and MOP values for these units, two sets of calculations must be performed. First calculate the MCA and MOP values as if the unit was in cooling mode (use the equations given in Set 1). Then calculate the MCA and MOP values as if the unit were in heating mode as follows. (Keep in mind when determining LOADS that the compressors don't run while the unit is in heating mode).

For units using heaters less than 50 kW:

MCA = 1.25 x (LOAD1 + LOAD2 + LOAD4) + (1.25 x LOAD3)

For units using heaters equal to or greater than 50 kW:

MCA = 1.25 x (LOAD1 + LOAD2 + LOAD4) + LOAD3

The nameplate MCA value will be the larger of the cooling mode MCA value or the heating mode MCA value calculated above.

MOP = (2.25 x LOAD1) + LOAD2 + LOAD3 + LOAD4

The selection MOP value will be the larger of the cooling mode MOP value or the heating mode MOP value calculated above.

Select a fuse rating equal to the MOP value. If the MOP value does not equal a standard fuse size as listed in NEC 240-6, select the next lower standard fuse rating.

Note: *If selected MOP is less than the MCA, then select the lowest standard maximum fuse size which is equal to or larger than the MCA, provided the selected fuse size does not exceed 800 amps.*

Dual Source Power units (200–230V with Electric Heat)

These units will have two circuit values shown on the nameplate. The first circuit value will be the refrigeration (cooling mode) values calculated per Set 1. The second set of circuit values shown on the nameplate will be for the electric heating circuit as follows.

MCA = (1.25 x LOAD3)

MOP = (1.25 x LOAD3)

Select a fuse rating for the electric heating circuit that is equal to the MOP value obtained in the equation above. If the MOP value does not equal a standard fuse size as listed in NEC 240-6, select the next lower standard fuse rating (see note below for exception).

Note: *If the available MOP option is less than the MCA obtained in the equation above, then reselect the lowest standard maximum fuse size which is equal to, or larger, than the MCA, provided the reselected fuse size does not exceed 800 amps.*

Service Sizing Data

Table 22. Compressor electrical service sizing data (20 to 130 tons)

Tonnage	No. of Compressors	200 V		230 V		460 V		575 V	
		RLA/MRC[a] (ea.)	LRA (ea.)	RLA/MRC[a] (ea.)	LRA (ea.)	RLA/MRC[a] (ea.)	LRA (ea.)	RLA/MRC[a] (ea.)	LRA (ea.)
20 Standard	1	52.8	300	52.8	300	23.8	150	20.5	109
	1	33.5	240	33.5	240	15.3	130	11.4	94
20 High Efficiency	1	52.8	300	52.8	300	23.8	150	20.5	109
	1	33.5	240	33.5	240	15.3	130	11.4	94
20 Variable Speed	1[b]	34.3	N/A	29.9	N/A	14.9	N/A	12.5	N/A
	1	36.8	267	32.0	267	16.0	142	15.2	103
25 Standard	1	27.7	203	27.7	203	14.5	98	12.5	84
	2	36.8	267	32.0	267	16.0	142	15.2	103
25 High Efficiency	1	57.8	340	57.4	340	27.1	179	24.4	132
	1	37.1	240	36.4	240	17.0	140	13.3	108
25 Variable Speed	1[b]	38.6	N/A	33.6	N/A	23.1	N/A	14.1	N/A
	1	40.3	267	40.3	267	19.1	142	15.8	103
30 Standard	1	27.7	203	27.7	203	14.5	98	12.5	84
	2	40.3	267	40.3	267	19.1	142	15.8	103
30 High Efficiency	1	27.7	203	27.7	203	14.5	98	12.5	84
	2	40.3	267	40.3	267	19.1	142	15.8	103
30 Variable Speed	1[b]	52.3	N/A	45.5	N/A	22.7	N/A	19.1	N/A
	1	51.3	315	45.6	315	22.3	158	19.1	136
40 Standard	1	30.6	203	28.4	203	13.3	98	11.9	84
	3	36.8	267	32.0	267	16.0	142	15.2	103
40 High Efficiency	2	30.6	203	28.4	203	13.3	98	11.9	84
	2	36.8	267	32.0	267	16.0	142	15.2	103
40 Variable Speed	1[b]	52.3	N/A	45.5	N/A	24.6	N/A	19.1	N/A
	2	36.8	267	32.0	267	16.0	142	15.2	103
50 Standard	4	40.3	267	40.3	267	19.1	142	15.8	103
50 High Efficiency	2	40.3	267	40.3	267	19.1	142	15.8	103
	2	46.2	304	42.3	304	20.1	147	17.2	122
50 Variable Speed	1[b]	85.9	N/A	74.7	N/A	39.6	N/A	32.3	N/A
	2	46.2	304	42.3	304	20.1	147	17.2	122
55 Standard	2	46.2	304	42.3	304	20.1	147	17.2	122
	2	51.3	315	45.6	315	22.3	158	19.1	136
55 High Efficiency	4	46.2	304	42.3	304	20.1	147	17.2	122
55 Variable Speed	1[b]	85.9	N/A	74.7	N/A	39.6	N/A	32.3	N/A
	1	46.2	304	42.3	304	20.1	147	17.2	122
	1	51.3	315	45.6	315	22.3	158	19.1	136
60 Standard	4	51.3	315	45.6	315	22.3	158	19.1	136
60 High Efficiency	3	51.3	315	45.6	315	22.3	158	19.1	136
	1	59.8	345	52.0	345	26.0	155	23.1	126
60 Variable Speed	1[b]	84.8	N/A	73.7	N/A	39.6	N/A	31.9	N/A
	1	51.3	315	45.6	315	22.3	158	19.1	136
	1	59.8	345	52.0	345	26.0	155	23.1	126
70 Standard	2	59.8	345	52.0	345	26.0	155	23.1	126
	1	59.6	320	51.8	320	25.9	160	20.7	135
	1	77.4	485	69.3	485	33.7	215	27.1	175
70 High Efficiency	4	59.8	345	52.0	345	26.0	155	23.1	126
70 Variable Speed	1[b]	96.2	N/A	78.7	N/A	45.0	N/A	36.2	N/A
	1	59.6	320	51.8	320	25.9	160	20.7	135
	1	77.4	485	69.3	485	33.7	215	27.1	175
75 Standard	2	59.6	320	51.8	320	25.9	160	20.7	135
	2	77.4	485	69.3	485	33.7	215	27.1	175
75 High Efficiency	1	59.6	320	51.8	320	25.9	160	20.7	135
	3	77.4	485	69.3	485	33.7	215	27.1	175

Table 22. Compressor electrical service sizing data (20 to 130 tons) (continued)

Tonnage	No. of Compressors	200 V		230 V		460 V		575 V	
		RLA/MRC[a] (ea.)	LRA (ea.)	RLA/MRC[a] (ea.)	LRA (ea.)	RLA/MRC[a] (ea.)	LRA (ea.)	RLA/MRC[a] (ea.)	LRA (ea.)
75 Variable Speed	1[b]	91.3	N/A	79.1	N/A	43.0	N/A	33.2	N/A
	1	59.6	320	51.8	320	25.9	160	20.7	135
	2	59.8	345	52.0	345	26.0	155	23.1	126
90 Standard and High Efficiency	4	N/A	N/A	N/A	N/A	33.7	215	27.1	175
105 Standard	2	N/A	N/A	N/A	N/A	33.7	215	27.1	175
	2	N/A	N/A	N/A	N/A	45.9	260	36.7	210
115 Standard	1	N/A	N/A	N/A	N/A	33.7	215	27.1	175
	3	N/A	N/A	N/A	N/A	45.9	260	36.7	210
130 Standard	3	N/A	N/A	N/A	N/A	45.9	260	36.7	210
	1	N/A	N/A	N/A	N/A	55.8	320	44.6	235

[a] RLA (Rated Load Amps) applies to fixed speed compressors; MRC (Max Rated Current) applies to variable speed compressors.
[b] Variable Speed Compressor.

Table 23. Electrical service sizing data — condenser fan motors — 20 to 130 tons

Tonnage, Type	No. of Motors	200 V	230 V	460 V	575 V
		FLA/MOC[a] (ea.)	FLA/MOC[a] (ea.)	FLA/MOC[a] (ea.)	FLA/MOC[a] (ea.)
20S, 20H	2	5.4	5.4	2.7	2.2
20S, 20H Low Ambient	1	5.4	5.4	2.7	2.2
	1[b]	4.6	4.6	2.1	1.8
20V	2[b]	4.6	4.6	2.1	1.8
25S	2	5.4	5.4	2.7	2.2
25S Low Ambient	1	5.4	5.4	2.7	2.2
	1[b]	4.6	4.6	2.1	1.8
25H, 25V	2[b]	4.6	4.6	2.1	1.8
30S, 30H	2	5.4	5.4	2.7	2.2
30S, 30H Low Ambient	1	5.4	5.4	2.7	2.2
	1[b]	4.6	4.6	2.1	1.8
30V	2[b]	4.6	4.6	2.1	1.8
40S	4	5.4	5.4	2.7	2.2
40S Low Ambient	2	5.4	5.4	2.7	2.2
	2[b]	4.6	4.6	2.1	1.8
40H, 40V	4[b]	4.6	4.6	2.1	1.8
50S, 55S	4	5.4	5.4	2.7	2.2
50S, 55S Low Ambient	2	5.4	5.4	2.7	2.2
	2[b]	4.6	4.6	2.1	1.8
50H, 50V, 55H, 55V	4[b]	4.6	4.6	2.1	1.8
60S, 60H, 70S, 70H, 75S, 75H	6	4.1	4.1	1.8	1.4
60S, 60H, 70S, 70H, 75S, 75H Low Ambient	4	4.1	4.1	1.8	1.4
	2[b]	3.0	3.0	1.4	1.2
60V, 70V, 75V	6[b]	3.0	3.0	1.4	1.2
90S	8	N/A	N/A	1.8	1.4
90S Low Ambient	6	N/A	N/A	1.8	1.4
	2[b]	N/A	N/A	2.2	1.5
90H, 105S, 115S	10	N/A	N/A	1.8	1.4
90H, 105S, 115S Low Ambient	8	N/A	N/A	1.8	1.4
	2[b]	N/A	N/A	2.2	1.5
130S	12	N/A	N/A	1.8	1.4
130S Low Ambient	10	N/A	N/A	1.8	1.4
	2[b]	N/A	N/A	2.2	1.5

[a] FLA (Full Load Amps) applies to fixed speed motors; MOC (Max Operating Current) applies to variable speed motors.
[b] Variable speed motor.

Table 24. Electrical service sizing data — supply/relief/return motors WITH bypass option — 20 to 130 tons

	200 V	230 V	460 V	575 V
	FLA (ea.)	FLA (ea.)	FLA (ea.)	FLA (ea.)
Motor Horsepower	**Supply/Relief/Return Fan Motor (4 pole)**			
3	9.7	8.4	4.2	3.4
5	15.3	13.2	6.6	5.3
7.5	22.8	19.6	9.8	7.8
10	29.5	25.2	12.6	10.1
15	43.0	36.0	18.0	15.0
20	56.1	49.4	24.7	19.5
25	72.0	61.0	30.5	24.8
30	84.0	73.2	36.6	29.0
40	N/A	N/A	49.0	39.0
50	N/A	N/A	59.0	47.2
Motor Horsepower	**Supply Fan Motor (6 pole)**			
3	10.1	9.0	4.5	3.6
5	17.0	14.8	7.4	5.6
7.5	25.0	22.0	11.0	9.0
10	32.0	28.6	14.3	11.9
15	47.0	41.0	20.5	16.3
20	63.0	54.0	27.0	20.8

Notes:

1. FLA is for individual motors by HP, not total unit supply fan HP.
2. Return fan motors are available in 3-20 Hp
3. 40 and 50 Hp motor available as standard in 460 and 575 volt only
4. DDP fans selected under 1,700 RPM will have 6-pole motors
5. 60-75T units with DDP supply fan motors have 1 VFD and 2 motors.
6. 90-130T units have 2 VFDs and 2 motors.

Table 25. Electrical service sizing data — single supply/relief/return motors WITHOUT bypass option — 20 to 130 tons

	200 V	230 V	460 V	575 V
	MOC (ea.)	MOC (ea.)	MOC (ea.)	MOC (ea.)
Motor Horsepower	**Supply/Relief/Return Fan Motor (4 pole)**			
3	8.8	7.6	3.8	3.1
5	13.9	12.0	6.0	4.8
7.5	20.7	17.8	8.9	7.1
10	26.8	22.9	11.5	9.2
15	39.1	32.7	16.4	13.6
20	51.0	44.9	22.5	17.7
25	65.5	55.5	27.7	22.5
30	76.4	66.5	33.3	26.4
40	N/A	N/A	44.5	35.5
50	N/A	N/A	53.6	42.9
Motor Horsepower	**Supply Fan Motor (6 pole)**			
3	9.2	8.2	4.1	3.3
5	15.5	13.5	6.7	5.1
7.5	22.7	20.0	10.0	8.2
10	29.1	26.0	13.0	10.8
15	42.7	37.3	18.6	14.8
20	57.3	49.1	24.5	18.9

Notes:

1. MOC (Max Operating Current) is VFD Input Current when fan motor is operating at FLA
2. MOC is for individual motors by HP, not total unit supply fan HP.
3. Return fan motors are available in 3-20 Hp.
4. 40 and 50 Hp motor available as standard in 460 and 575 volt only.
5. DDP fans selected under 1,700 RPM will have 6-pole motors.
6. 90-130T units have 2 VFDs and 2 motors.

Table 26. Electrical service sizing data — dual DDP supply fan motors WITHOUT bypass option — 60 to 75 tons

	200 V	230 V	460 V	575 V
	MOC	MOC	MOC	MOC
Motor Horsepower	**2x Supply Fan Motors (4 pole)**			
2x 7.5HP	41.5	35.6	17.8	14.2
2x 10HP	53.6	45.8	22.9	18.4
2x 15HP	78.2	65.5	32.7	27.3
2x 20HP	N/A	N/A	44.9	35.5
2x 25HP	N/A	N/A	55.5	45.1
Motor Horsepower	**2x Supply Fan Motors (6 pole)**			
2x 5HP	30.9	26.9	13.5	10.2
2x 7.5HP	45.5	40.0	20.0	16.4
2x 10HP	58.2	52.0	26.0	21.6
2x 15HP	85.5	74.5	37.3	29.6
2x 20HP	N/A	N/A	49.1	37.8

Notes:

1. MOC (Max Operating Current) is VFD Input Current when fan motors are operating at FLA
2. MOC for dual DDP supply fans without bypass represents the total VFD input current for both supply fan motors.
3. Dual DDP fans selected under 1,700 RPM will have 6-pole motors

Table 27. Electrical service sizing data —electric heat module (electric heat units only) — 20 to 130 tons

Module kW	Electric Heat FLA			
	200V	230V	460V	575V
30	83.3	72.2	36.1	28.9
50	138.8	120.3	60.1	48.1
70	194.3	168.4	84.2	67.4
90	249.8	216.5	108.3	86.6
110	305.3	264.6	132.3	105.9
130	-	-	156.4	125.1
150	-	-	180.4	144.3
170	-	-	204.5	163.6
190	-	-	228.5	182.8

Note: Electric heat FLA are determined at 208, 240, 480 and 600 volts.

Table 28. Voltage utilization range

Unit Voltage	Voltage Utilization Range
200/60/3	180-220
230/60/3	207-253
460/60/3	414-506
575/60/3	517-633

Field Installed Control Wiring

The IntelliPak rooftop has many operating modes. The flexibility of having several system modes depends upon the type of sensor and/or remote panel selected to interface with the Symbio 800. An overall layout of the various control options available for a Single Zone application, with the required number of conductors for each device, is illustrated beginning with . Figure 33, p. 52 illustrates the various control options with the required number of conductors for a Variable Air Volume application.

Note: *All field wiring must conform to NEC guidelines as well as state and local codes.*

⚠ WARNING

Hazardous Voltage!

Failure to disconnect power before servicing could result in death or serious injury.

Disconnect all electric power, including remote disconnects before servicing. Follow proper lockout/tagout procedures to ensure the power can not be inadvertently energized. Verify that no power is present with a voltmeter.

⚠ WARNING

Proper Field Wiring and Grounding Required!

Failure to follow code could result in death or serious injury.

All field wiring MUST be performed by qualified personnel. Improperly installed and grounded field wiring poses FIRE and ELECTROCUTION hazards. To avoid these hazards, you MUST follow requirements for field wiring installation and grounding as described in NEC and your local/state/national electrical codes.

The various field installed control panels, sensors, switches, and contacts discussed in this section require both AC and DC consideration. These diagrams are representative of standard applications and are provided for general reference only. Always refer to the wiring diagram that shipped with the unit for specific electrical schematic and connection information.

Controls using 24 VAC

Before installing any connecting wiring, refer to , and Figure 3, p. 19.for the electrical access locations provided on the unit, and Table 29, p. 59 for AC conductor sizing guidelines. Then check the following:

NOTICE

Use Copper Conductors Only!

Failure to use copper conductors could result in equipment damage as the equipment was not designed or qualified to accept other types of conductors.

1. Use copper conductors unless otherwise specified.
2. Ensure that the AC control wiring between the controls and the unit's termination point does not exceed three (3) ohms/conductor for the length of the run.

Note: *Resistance in excess of 3 ohms per conductor may cause component failure due to insufficient AC voltage supply.*

3. Make sure to check all loads and conductors for grounds, shorts, and mis-wiring.

Table 29. AC conductors

Distance from Unit to Control	Recommended Wire Size
000-460 feet	18 gauge
461-732 feet	16 gauge
733-1000 feet	14 gauge

4. Do not run the AC low voltage wiring in the same conduit with the high voltage power wiring.

Transformer for Expansion Module

When the expansion module is installed, a 115Vac primary - 24Vac secondary - 75VA transformer is provided for customer use. However, the 20T standard efficiency, 20T high efficiency, and 25T standard efficiency units utilize this transformer to power a compressor solenoid so the available VA for customer use is limited to 70VA.

Controls using DC Analog Input/ Outputs

Before installing any connecting wiring between the unit and components utilizing a DC analog input\output signal, refer to the appropriate illustration in and Figure 3, p. 19 for the electrical access locations provided on the unit and Table 30, p. 59 for conductor sizing guidelines. Then check the following:

NOTICE

Use Copper Conductors Only!

Failure to use copper conductors could result in equipment damage as the equipment was not designed or qualified to accept other types of conductors.

1. Use standard copper conductor thermostat wire unless otherwise specified.
2. Ensure that the wiring between the controls and the unit termination point does not exceed two and a half (2.5) ohms/conductor for the length of the run.

Note: *Resistance in excess of 2.5 ohms per conductor can cause deviations in the accuracy of the controls.*

Table 30. DC conductors

Distance from Unit to Control	Recommended Wire Size
000-150 feet	22 gauge
151- 240 feet	20 gauge
241- 385 feet	18 gauge
386- 610 feet	16 gauge
611- 970 feet	14 gauge

3. Do not run the electrical wires transporting DC signals in or around conduit housing high voltage wires. Units wired for a BACnet® Communication, LonTalk® communication Interface (LCI), or Modbus option which utilizes a serial communication link must:

- be 18 AWG shielded twisted pair cable (Belden 8760 or equivalent).
- not exceed 5,000 feet maximum for each link.
- not pass between buildings.

Variable Air Volume System Controls

Discharge Temperature Control Changeover Contacts

These contacts are connected to the customer connection 1KF11 when daytime heating on Discharge Temperature Control units with internal or external hydronic heat is required. Daytime (occupied) heating switches the system to a Zone Temperature Control type mode of operation. Refer to the unit wiring diagram for the field connection terminals in the unit control panel. The switch must be rated at 12 ma @ 24 VDC minimum.

Remote Zone Sensor (BAYSENS073*)

This electronic analog sensor features remote zone sensing and timed override with override cancellation. It is used as the source for zone temperature control. Refer to for the Temperature vs. Resistance coefficient.

Remote Zone Sensor (BAYSENS074*)

This electronic analog sensor features single setpoint capability and timed override with override cancellation. It is used with a Trane Integrated Comfort™ system. Refer to for the Temperature vs. Resistance coefficient.

Equipment Stop

A field-supplied single pole single throw switch can be used to shut down the unit operation. This switch is a binary input wired to the customer connection, wired to 1XD24 (see unit diagrams). Ensure the appropriate jumper wire at 1XD24 is removed when this switch is installed. When opened, the unit shuts down immediately and can be canceled by closing the switch. The switch must be rated for 12 ma @ 24 VDC minimum.

Ventilation Override Mode (VOM) Contacts

Ventilation Override Modes (VOM) give the building controller the ability to override normal unit operation and provide special ventilation operation. VOM is initiated only at the provided five binary inputs (Mode A, Mode B, Mode C, Mode D, Mode E). When any of the normally open contacts are closed, VOM initiates specified functions such as space pressurization, relief, purge, purge with supply air pressure control, and unit off when any one of the corresponding binary inputs are activated. The compressors and condenser fans, and all other components not directly controlled via VOM events, are disabled during the ventilation operation. If more than one ventilation sequence is activated, Mode A has highest priority, Mode E has lowest.

This function gives the customer the ability to override normal unit operation via a supervisory controller. Typically, these requests originate from a fire control panel. Flexibility is provided by allowing the customer to re-define each of the five responses at the front panel, along with allowing each individual response to be ‘Locked’ to insure expected operation is not changed. See Programming Guide for more information.

This feature is optional. When configured VOM has priority over Emergency Override, System Mode Off, and normal unit operation. The following overrides will prevent or terminate VOM operation.

- Local Stop
- Equipment Stop
- Emergency Stop
- Manual Control

When any VOM Mode (A, B, C, D, E) input is activated or closed, the VOM mode of operation will begin in less than 10 seconds, and a VOM Relay binary output will energize/close. Heating capacity, cooling capacity, and Rapid Restart will be disabled/terminated.

Refer to Table 31, p. 61 summarizing the unit operation in response to VOM binary inputs Modes. VOM inputs are fully configurable; therefore, Table 31, p. 61 provides the factory default settings.

If one or more of the 5 VOM inputs are closed, the unit will enter the VOM mode with the highest priority (A highest, E lowest). Should the unit be in an active VOM mode and a VOM input of higher priority is closed, the unit will immediately transition to the higher priority mode. Should the unit be in an active VOM mode and a VOM input of lower priority is closed, the unit will not change to this lower priority mode until the current (higher priority) VOM mode binary input is opened.

When all VOM inputs are open, within 15 seconds, VOM terminates. All unit components will be reset OFF or CLOSED, and after Unit Power Up Delay is honored, the unit will start normal operation.

These functions are controlled by binary inputs wired to the VOM. They can be initiated by a toggle switch, or a time clock. The switch must be rated for 12 ma @ 24 VDC minimum.

Table 31. VOM

VOM Input	Output	Operation	Heat Cool Mode Status
Mode A	Supply fan	Off/0%	Off
(Unit Off)	Outdoor air damper	Closed	
	Relief fan / Relief damper	Off/Closed	
	Return Fan / Relief Damper	Off/Closed	
	VAV Box Relay	Energized	
Mode B	Supply fan	On/100%(1)	Fan Only
(Pressurize)	Outdoor air damper	100%	
	Relief fan / Relief damper	Off/Closed	
	Return fan / Relief damper	Off/Closed	
	VAV Box Relay	Energized	
Mode C	Supply fan	Off/0%	Fan Only
(Depressurize)	Outdoor air damper	0%	
	Relief fan / Relief damper	On/Open	
	Return fan / Relief damper	On/Open	
	VAV Box Relay	De-engerized	
Mode D	Supply fan	On/100% (1)	Fan Only
(Purge)	Outdoor air damper	Open	
	Relief fan / Relief damper	On/Open	
	Return fan / Relief damper	On/Open	
	VAV Box Relay	Energized	

Table 31. VOM (continued)

VOM Input	Output	Operation	Heat Cool Mode Status
Mode E	Supply fan	On/Duct Static Pressure Control	Fan Only
(Purge with Duct Static Pressure Control)	Outdoor air damper	Open	
	Relief fan / Relief damper	On/Open	
	Relief fan / Relief damper	On/Open	
	VAV Box Relay	Energized	

Refer to the appropriate Programming, Troubleshooting Guide (PTG latest edition) for programming instructions.

Emergency Stop Switch

A normally closed (N.C.) switch wired to the customer connection (1KF11) and 1XD24 may be used during emergency situations to shut down all unit operations. When opened, an immediate shutdown occurs. An emergency stop diagnostic is entered into the user interface. The switch must be rated for 12 ma @ 24 VDC minimum.

Occupied/Unoccupied Contacts

This binary input provides the Occupied/Unoccupied status information of the building to the Symbio 800. It can be initiated by a time clock, or a Building Automation System control output. The relay's contacts must be rated for 12 ma @ 24 VDC minimum.

Wall or Duct Mount Humidity Sensor (BAYSENS036* or BAYSENS037*)

This field-installed humidity sensor is mounted in the space or in the return air duct, sending an analog input to the customer connection (1KF10) and 1XD26. It must be ordered/installed with modulating hot gas reheat, but can also be used for humidification applications.

Unit Replacement

This section covers the removal and preparation necessary for setting the R-410A replacement unit in place. For more detailed information, please see the Rooftop Replacement Engineering Bulletin — RT-PRB027*–EN.

⚠ WARNING

R-410A Refrigerant under Higher Pressure than R-22!

Failure to use proper equipment or components as described below, could result in equipment failing and possibly exploding, which could result in death, serious injury, or equipment damage.

The units described in this manual use R-410A refrigerant which operates at higher pressures than R-22. Use ONLY R-410A rated service equipment or components with these units. For specific handling concerns with R-410A, please contact your local Trane representative.

⚠ WARNING

Fiberglass Wool!

Exposure to glass wool fibers without all necessary PPE equipment could result in cancer, respiratory, skin or eye irritation, which could result in death or serious injury. Disturbing the insulation in this product during installation, maintenance or repair will expose you to airborne particles of glass wool fibers and ceramic fibers known to the state of California to cause cancer through inhalation.

You MUST wear all necessary Personal Protective Equipment (PPE) including gloves, eye protection, a NIOSH approved dust/mist respirator, long sleeves and pants when working with products containing fiberglass wool.

Precautionary Measures:

- **Avoid breathing fiberglass dust.**
- **Use a NIOSH approved dust/mist respirator.**
- **Avoid contact with the skin or eyes. Wear long-sleeved, loose-fitting clothing, gloves, and eye protection.**
- **Wash clothes separately from other clothing; rinse washer thoroughly.**
- **Operations such as sawing, blowing, tear-out, and spraying may generate fiber concentrations requiring additional respiratory protection. Use the appropriate NIOSH approved respirator.**

First Aid Measures:

- **Eye Contact - Flush eyes with water to remove dust. If symptoms persist, seek medical attention.**
- **Skin Contact - Wash affected areas gently with soap and warm water after handling.**

Electrical Connection

⚠ WARNING

Live Electrical Components!

Failure to follow all electrical safety precautions when exposed to live electrical components could result in death or serious injury.

When it is necessary to work with live electrical components, have a qualified licensed electrician or other individual who has been properly trained in handling live electrical components perform these tasks.

Main Electrical Power

Lock and tag out unit main electric power and remove power supply wiring from installed disconnect/terminal block of unit. See for locations.

Note: *Inspect wiring to ensure that all field-installed wiring complies with NEC and applicable local codes.*

SEHF Units with 200V or 230V Electric Heat

(Requires separate power supply to heater)

Lock and tag out unit main electric power and remove power supply wiring for the electric heat from a dedicated, field- supplied/installed disconnect to terminal block, or to an optional unit-mounted disconnect switch. See for locations.

Field-installed Control Wiring

Note: *Inspect wiring to ensure that all field-installed wiring complies with NEC and applicable local codes.*

Remove the field wiring connections for the variable air volume controls as applicable.

Note: *Label wiring to save time when reconnecting wiring is necessary.*

Remove ground wire from the unit.

Note: *The electrical connection for 40, 60, 70 and 75 ton is 32 inches further down the unit than older (pre-2010) style units. On full perimeter curbs, this also means the incoming electrical will be outside the curb area. The electrician should be informed of both points.*

See for typical field wiring for 20-75 ton units. See Figure 33, p. 52 for typical field power wiring for 90-130 ton units.

Requirements for Gas Heat

⚠ WARNING

Hazardous Gases and Flammable Vapors!

Failure to observe the following instructions could result in exposure to hazardous gases, fuel substances, or substances from incomplete combustion, which could result in death or serious injury. The state of California has determined that these substances may cause cancer, birth defects, or other reproductive harm.

Improper installation, adjustment, alteration, service or use of this product could cause flammable mixtures or lead to excessive carbon monoxide. To avoid hazardous gases and flammable vapors follow proper installation and setup of this product and all warnings as provided in this manual.

1. Remove and isolate gas supply from the unit gas train.
2. Ensure gas supply line piping joints are properly sealed.
3. Remove drip leg Installed in the gas piping near the unit.
4. Remove factory-supplied flue assembly installed on the unit.
5. Remove the 3/4" CPVC furnace drain stub out that was used for condensate drain.

Requirements for Hot Water Heat (SLH*)

1. Remove and isolate water piping that comes into the heating section from the base of the unit.
2. Remove the installed, 3-way modulating valve, if necessary, to remove unit.
3. Remove the valve actuator wiring.

Requirements for Steam Heat (SSH*)

1. Remove and isolate steam piping that comes into the heating section from the base of the unit.
2. Remove, 2-way modulating valve if necessary.
3. Remove the valve actuator wiring.

Space Pressure Sensor and Tubing Installation

(All units with Statitrac)

Remove field-supplied pneumatic tubing connected to the space pressure transducer located in the filter section (see Figure 34, p. 63).

Figure 34. Duct static pressure control layout

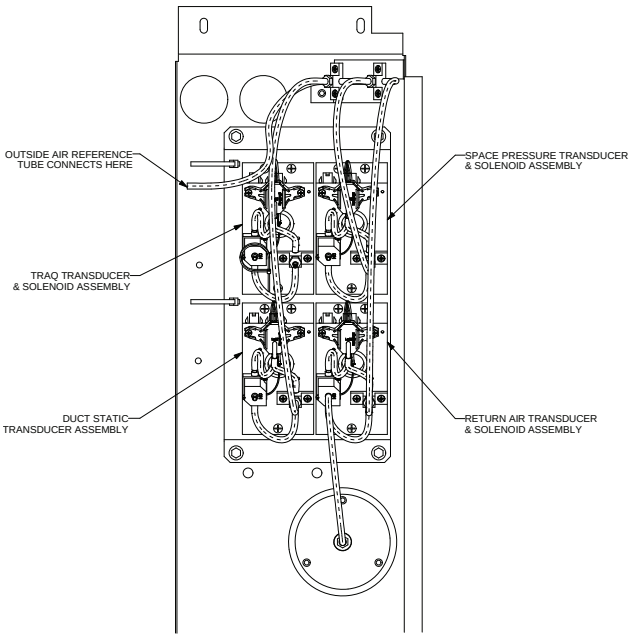

Figure 35. Duct, space, and return plenum pressure transducer

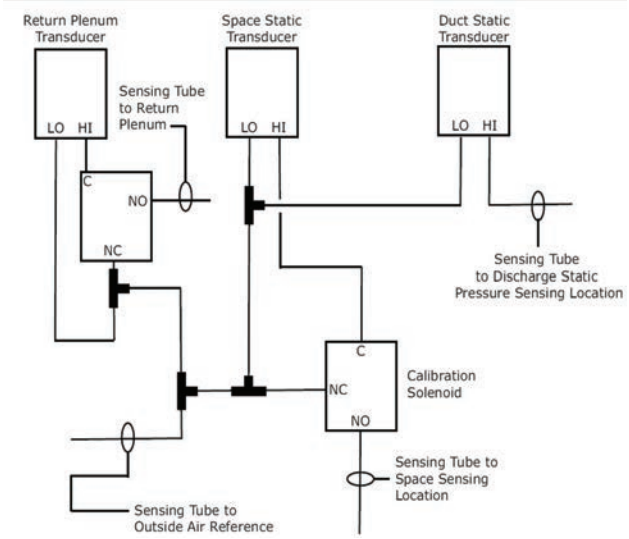

Condensate Drain Connections

Each S*HF or K unit is provided with two 1" evaporator condensate drain connections (one on each side of the unit).

Remove all 1" condensate drain connections from unit, see Figure 36, p. 64.

Figure 36. Condensate drain locations

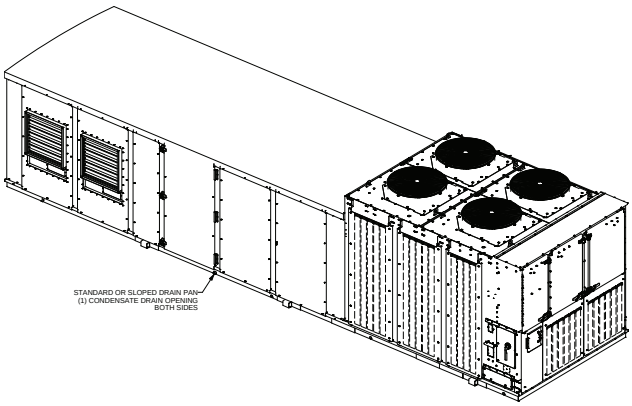

Supply and Return Duct Connections

Ensure supply and return duct connections were installed to the roof curb supply and return areas of roof curb, rather than to the unit itself.

Remove supply and return duct work if it was directly connected to the unit.

Installation of New Units

See unit IOM and appropriate programming guide for installation operation and programming requirements. For Lifting Procedures, see "Unit Rigging and Placement," p. 31.

Table 32. Approximate roof curb and S*HC unit operating weights (units built prior to 1991)

Unit Size	Typical Unit Operating Weight			Roof Curb Max Weight	
	SAHC	SE,SL, SS, SXHC	SB, SFHC	SAHC	S*HF
C20	4,600	4,950	5,250	445	470
C25	4,700	5,050	5,300	445	470
C30	5,500	6,050	6,200	445	470
C40	7,500	8,200	8,500	505	540
C50	8,350	9,100	9,200	530	560
C55	8,500	9,200	9,350	530	560
C60	9,600	10,300	10,400	545	575
C70	10,500	11,200	11,300	545	575
C75	10,700	11,400	11,500	545	575

Note: Weight shown in this table represents the maximum unit operating weight for S*HC units with heating/cooling functions indicated and includes economizer and relief fan options. Actual unit weight is on the unit nameplate.

Table 33. Approximate operating weights, 90 to 100 ton, "E" style cabinet (units built prior to 1991)

Unit Size/ Tons	Rooftop w/o Relief Fans	Rooftop with Relief Fans	Curb
SEHE C90	13,150	14,500	600
SFHE C90	13,820	15,150	600
SXHE C90	13,000	14,340	600
SEHE D11	13,700	15,050 600	600
SFHE D11	14,360	15,700	600
SXHE D11	13,550	14,880	600

Figure 37. Perimeter gasket material

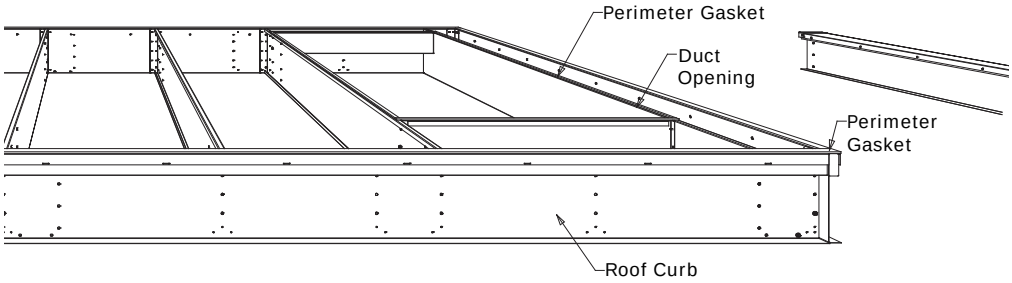

Figure 38. Typical partial perimeter curb with pedestal illustration for 20- 75 ton standard units

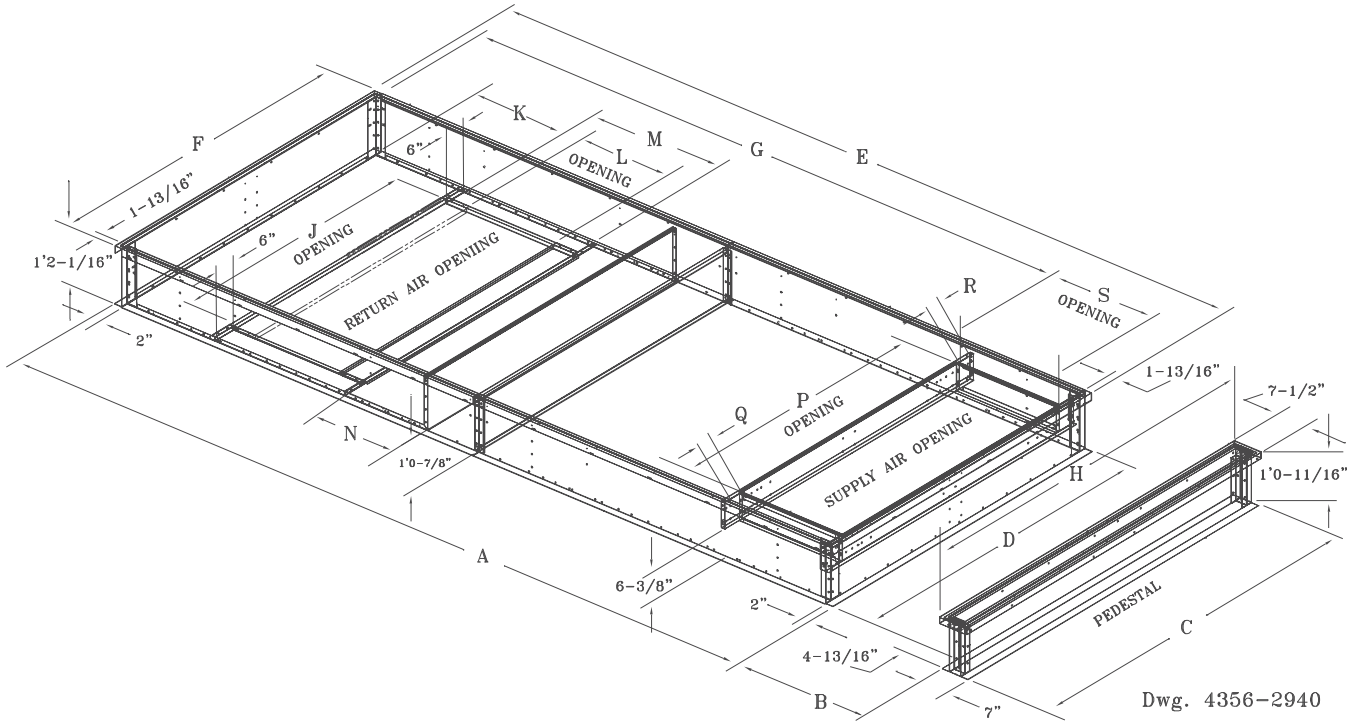

Table 34. Typical curb dimensions for 20 to 75 ton SAHF units with air-cooled condensers

Curb Dimensions	SAHF-C20,C25, C30	SAHF-C40	SAHF-C50, C55	SAHF-C60, C70, C75
A	16' 3-7/8"	19' 1-15/16"	19' 1-15/16"	19' 1-15/16"
B	2' 10-1/16"	7' 10-1/16"	7' 10-1/16	7' 10-1/16"
C	7' 10-7/16"	7' 10-7/16"	7' 10-7/16"	9' 11-15/16"
D	7' 0-13/16"	7' 0-13/16"	7' 0-13/16"	9' 2-5/16"
E	16' 3-9/16"	19' 1-5/8"	19' 1-5/8"	19' 1-5/8"
F	7' 0-1/2"	7' 0-1/2"	7' 0-1/2"	9' 2"
G	13' 6-15/16"	16' 2-9/16"	16' 2-9/16"	16' 2-9/16"
H	7' 11-15/16"	7' 11-15/16"	7' 11-15/16"	10' 1-7/16"
J	5' 8-13/16"	5' 8-13/16"	5' 8-13/16"	7' 10-5/16"
K	2' 0"	2' 0"	2' 0"	2' 0"
L	2' 5-5/16"	3' 6"	3' 6"	3' 6"

Table 34. Typical curb dimensions for 20 to 75 ton SAHF units with air-cooled condensers (continued)

Curb Dimensions	SAHF-C20,C25, C30	SAHF-C40	SAHF-C50, C55	SAHF-C60, C70, C75
M	2' 11-5/16"	4' 0"	4' 0"	4' 0"
N	1' 10-5/8"	1' 10-5/8"	1' 10-5/8"	1' 10-5/8"
P	5' 9-1/2"	5' 9-1/2"	5' 91/2"	6' 11-7/8"
Q	0' 5-11/16"	0' 5-11/16"	0' 5-11/16"	0' 11-3/16"
R	0' 5-11/16"	0' 5-11/16"	0' 5-11/16"	0' 11-3/16"
S	2' 3-5/16"	2' 5-15/16"	2' 5-15/16"	2' 5-15/16"

Table 35. Typical curb dimensions for SEHF, SFHF, SLHF, SSHF, SXHF, 20 to 75 ton units with air-cooled condensers

Curb Dimensions	S_HF-C20,C25, C30	S_HF-C40	S_HF-C50, C55	S_HF-C60,C70, C75
A	18' 7-1/2"	22' 4-1/2"	22' 4-1/2" 22'	4-1/2"
B	2' 10-1/16"	7' 10-1/16"	7' 10-1/16"	7' 10-1/16
C	7' 10-7/16"	7' 10-7/16"	7' 10-7/16"	9' 11-15/16"
D	7' 0-13/16"	7' 0-13/16"	7' 0-13/16"	9' 2-5/16"
E	18' 7-3/16"	22' 4-1/8"	22' 4-1/8"	22' 4-1/8"
F	7' 0-1/2"	7' 0-1/2"	7' 0-1/2"	9' 2"
G	15' 10-9/16"	19' 5"	19' 5"	19' 5"
H	7' 11-15/16"	7' 11-15/16"	7' 11-15/16"	10' 1-7/16"
J	5' 8-13/16"	5' 8-13/16"	5' 8-13/16"	7' 10-5/16"
K	2' 0"	2' 0"	2' 0"	2' 0"
L	2' 5-5/16"	3' 6"	3' 6"	3' 6"
M	2' 11-5/16"	4' 0"	4' 0"	4' 0"
N	1' 10-5/8"	1' 10-5/8"	1' 10-5/8"	1' 10-5/8"
P	5' 7-3/8"	5' 7-3/8"	5' 7-3/8"	7' 8-3/4"
Q	1' 0-7/16"	0' 11-3/16"	0' 11-3/16"	0' 11-3/16"
R	0' 1 "	0' 2-1/4"	0' 2-1/4"	0' 2-3/8"
S	2' 3-5/16"	2' 5-5/16"	2' 5-5/16"	2' 5-5/16"

Figure 39. Full perimeter curb with pedestal (20 to 75 ton units built prior to 1991)

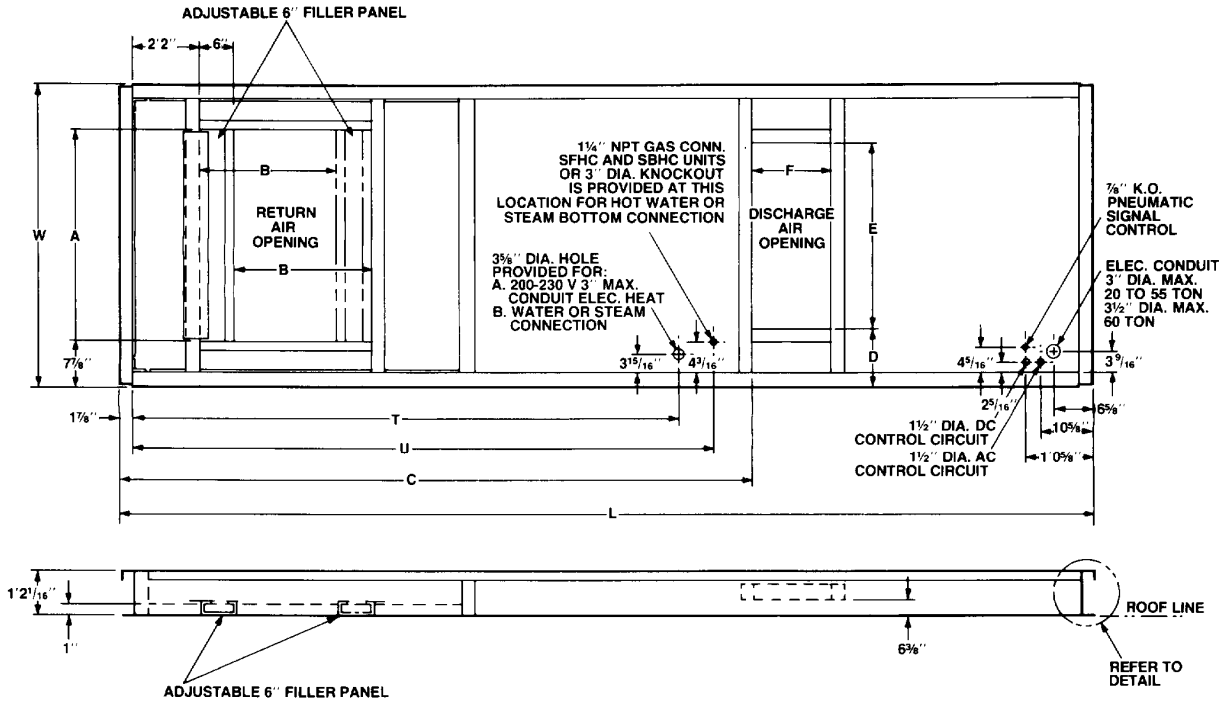

Table 36. 20 to 75 ton roof curb dimensions, downflow (units built prior to 1991)

Model	Unit Size	W	L	A	B	C	D	E	F	T	U
SAHC	20, 25, 30	7'–1/2"	21'–3 3/4"	5'–8 3/4"	2'–5 5/16"	13'–8 13/16"	7 1/2"	5'–9 1/2"	2'–3 5/16"	NA	NA
	40	7'–1/2"	26'–6"	5'–8 3/4"	3'–6"	16'–4 3/8"	7 1/2"	5'–9 1/2"	2'–5 15/16"	NA	NA
	50, 55	7'–1/2"	29'–1 15/16"	5'–8 3/4"	3'–6"	16'–4 5/16"	7 1/2"	5'–9 1/2"	2'–5 15/16"	NA	NA
	60	9'–2"	26'–6"	7'–10 1/4"	3'–6"	16'–4 3/8"	1'–1 1/16"	6'–11 7/8"	2'–5 15/16"	NA	NA
	75	9'–2"	26'–6"	7'–10 1/4"	3'–6"	16'–4 3/8"	1'–1 1/16"	6'–11 7/8"	2'–5 15/16"	NA	NA
SEHC	20, 25, 30	7'–1/2"	23'–7 3/8"	5'–8 3/4"	2'–5 5/16"	16'–0 7/16"	1'–2 5/16"	5'–7 3/8"	2'–3 5/16"	15'–7/16"	16'–4 7/8"
SFHC	40	7'–1/2"	29'–8 1/2"	5'–8 3/4"	3'–6"	19'–6 7/8"	1'–2 5/16"	5'–7 3/8"	2'–5 15/16"	18'–6 13/16"	20'–1 7/8" 19'–8 7/8"
SLHC SSHC	50, 55	7'–1/2"	32'–4 1/2"	5'–8 3/4"	3'–6"	19'–6 13/16"	1'–2 5/16"	5'–7 3/8"	2'–5 15/16"	18'–6 13/16"	20'–1 7/8" 19'–8 7/8"
SXHC	60	9'–2"	29'–8 1/2"	7'–10 1/4"	3'–6"	19'–6 7/8"	1'–2 5/16"	7'–8 7/8"	2'–5 15/16"	18'–6 13/16"	20'–1 7/8" 19'–8 7/8"
	75	9'–2"	29'–8 1/2"	7'–10 1/4"	3'–6"	19'–6 7/8"	1'–2 5/16"	7'–8 7/8"	2'–5 15/16"	18'–6 13/16"	20'–1 7/8" 19'–8 7/8"

Note: The return opening of the roof curb is provided with an adjustable filler panel 6" wide. This panel allows adjustment of the return air opening in order to clear roof members of all standard roof constructions with both supply and return openings. The return air opening of the curb is at a 90 degree angle as compared to the rooftop return air opening to allow this placement flexibility. The curb acts as a plenum between the ductwork and the unit return opening. A retainer clip is used to secure the adjustable filler piece to the roof curb.

Unit Startup

Sequence of Operation

NOTICE

Compressor Failure!

Failure to follow instruction below could result in compressor failure.
Unit must be powered and crankcase heaters energized at least 8 hours BEFORE compressors are started.

Stop/Off/Auto

There are a number of reasons the Symbio 800 controller will have the IntelliPak unit stopped or off. The user interface home screen displays unit mode of Stopped or Auto. Stopped is indicated when an override is preventing operation such as: Local Stop, Emergency Stop, or Equipment Stop input is active. Auto is indicated when in automatic control but is currently off in modes such as: Unoccupied, Ventilation Override, Emergency Override or the like.

When Heat Cool Mode Status is Off, unit operation will be prevented; whereas, all other modes allow operation.

Occupancy

There are many sources and types of occupancy. These have an effect on the operation of the IntelliPak unit. All sources are arbitrated (prioritized) into a final occupancy status.

Sources of Occupancy

- Occupancy Request is a communicated value from a Building Automation System (BAS) schedule.
- Occupancy Input is a local input from the space served by the equipment. These are typically optional local time clocks or occupancy sensors. This is a physical input to the Symbio controller and is field installed.
- Bypass Timer starts because of a user requested occupancy override (also known as Occupied Bypass). The occupant requests temporary occupied comfort heating or cooling during unoccupied scheduled time periods. An example of this would be the Timed Override (TOV) button on the zone sensor. See “Timed Override,” p. 68for more information.

Occupancy Status Definitions

Occupied Operation: The IntelliPak unit is running in a Normal mode providing temperature and ventilation control to the normal occupied setpoints and comfort demands of the occupants.

Unoccupied Operation: The IntelliPak unit is typically shut down and is not providing temperature control to the normal occupied setpoints. No ventilation is required or provided. Temperature control is determined by energy conservation and building protection thresholds.

Occupied Bypass Operation: The IntelliPak unit is temporarily in an Occupied state for some period of time and will automatically return to unoccupied operation when the bypass timer expires. The Occupied Bypass Timer is a user-adjustable field. However setting the timer to 0 minutes effectively disables Timed Override at the equipment controller.

Occupied Standby Operation: Standby does not apply to a discharge air controller. These units treat Standby as Occupied. Space temperature control units in an Occupied-Standby state are controlling to occupied standby temperature setpoints. Normal operation will resume when Occupancy Status goes to an Occupied state.

Timed Override

Timed Override (TOV) is a function that allows a user, located in the conditioned space, to temporarily override the IntelliPak operation from unoccupied mode to occupied mode (referred to as Occupied-Bypass). To accomplish this, Trane wired or wireless zone sensor devices are equipped with “On” and “Cancel” push buttons. Some sensors refer to the buttons as “Occupied” and “Unoccupied”. Timed override operation applies, in some way, to all unit types.

On Wired sensors, the timed override request (ON) and timed override cancel (CANCEL) buttons momentary modify the zone temperature thermistor resistance to a value outside the normal zone temperature operating range. The Symbio 800 controller detects this change; however, this momentary button press does not disrupt the space temperature value being used. The press duration is 0.5 to 8 seconds.

Wireless sensors process the timed override request/cancel signal at the sensor and communicate the appropriate timed override status (mode).

Service Pin Message Request

A secondary feature of wired zone sensors is Service Pin Message Request, not associated with TOV. An On/Occupied push button press for 8 to 30 seconds can initiate Neuron ID and Program ID message broadcast on a LON network. This function is used to install and troubleshoot LON networks. This feature benefits installation of a LON device by initiating the service pin message from a zone sensor rather than at the equipment.

Performance Data

Supply Fan Performance

Note: *Direct Drive plenum fan applications require minimum external static values ranging from 0.3 to 0.7 in H_2O.*

Figure 40. Supply fan performance with or without variable frequency drive - 20 and 25 tons air-cooled, - forward curved

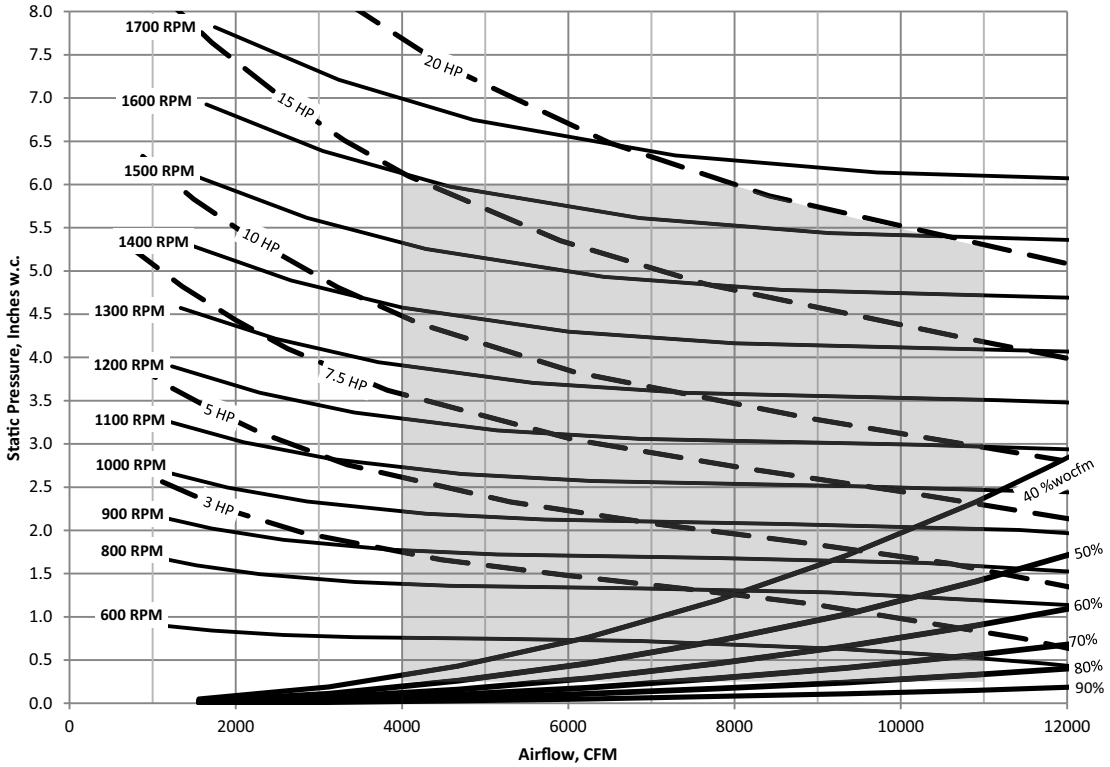

Important: *Maximum static pressure leaving the rooftop is 4.0" H_2O positive. The static pressure drops from the supply fan to the space cannot exceed 4.0" H_2O.*

Notes:

- *Fan performance for 20 and 25 tons rooftops is identical. Contact your local Trane® representative for information on oversized motors.*
- *Shaded areas represent selectable area. Contact your local Trane® representative for more information.*
- *Supply fan performance curve includes internal resistance of rooftop. For total static pressure determination, system external static must be added to appropriate component static pressure drops (evaporator coil, filters, optional economizer, optional relief fan, optional heating system, optional cooling only extended casing, optional roof curb).*
- *Maximum Cfm (for cULus approval) as follows: 20 ton - 9,000 Cfm, 25 ton - 11,000 Cfm.*
- *Minimum motor horsepower is 3 hp. Maximum motor horsepower is 20 hp. Maximum fan RPM is 1750.*

Figure 41. Supply fan performance with variable frequency drive - 20 and 25 tons cooling only - direct drive plenum, 80% width

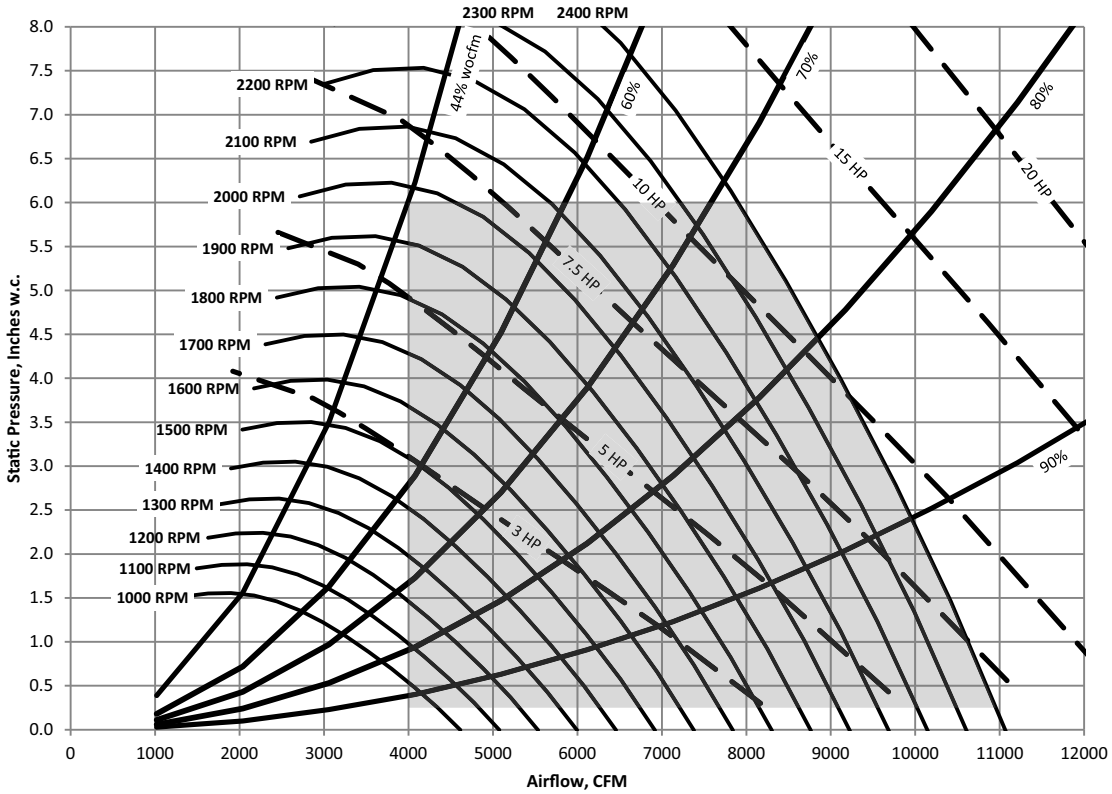

Important: *Maximum static pressure leaving the rooftop is 4.0" H_2O positive. The static pressure drops from the supply fan to the space cannot exceed 4.0" H_2O.*

Notes:

- *Shaded areas represent selectable area. Contact your local Trane® representative for more information.*
- *Supply fan performance curve includes internal resistance of rooftop. For total static pressure determination, system external static must be added to appropriate component static pressure drops (evaporator coil, filters, optional economizer, optional relief fan, optional heating system, optional cooling only extended casing, optional roof curb).*
- *Maximum Cfm (for cULus approval) as follows: 20 ton - 9,000 Cfm, 25 ton - 11,000 Cfm.*
- *Minimum motor horsepower is 3 hp. Maximum motor horsepower is 20 hp. Maximum fan RPM is 2400.*

Figure 42. Supply fan performance with variable frequency drive - 20 and 25 tons cooling only - direct drive plenum, 120% width

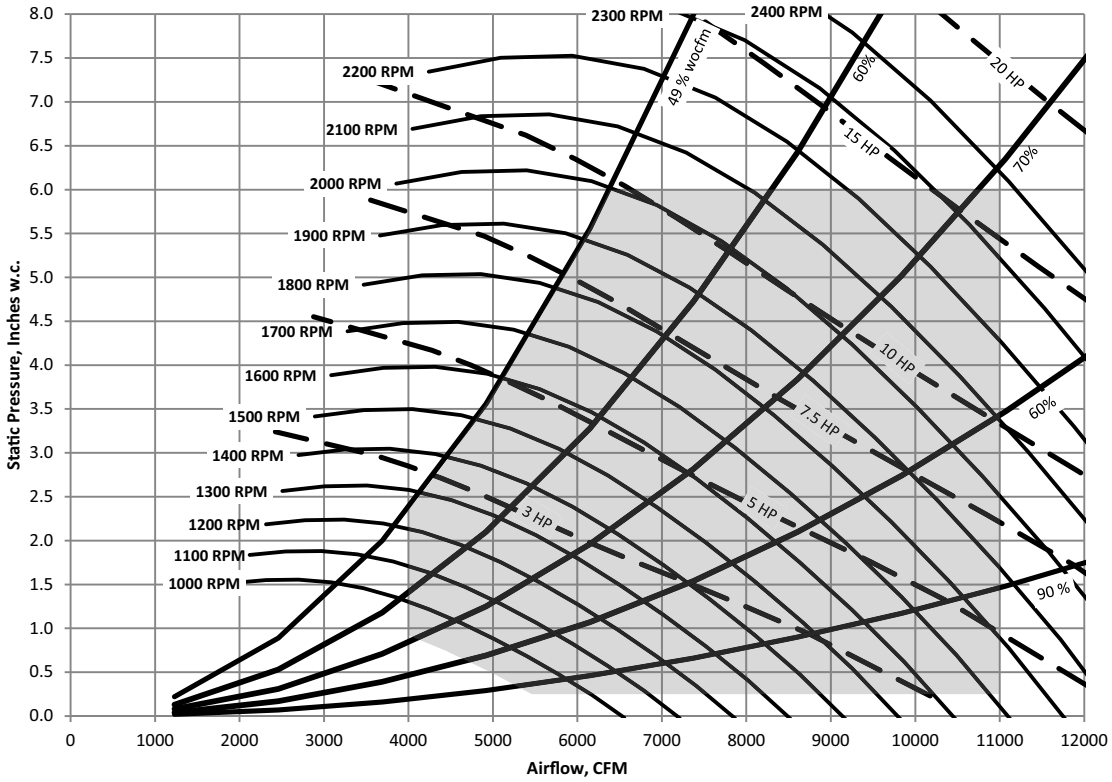

Important: *Maximum static pressure leaving the rooftop is 4.0" H_2O positive. The static pressure drops from the supply fan to the space cannot exceed 4.0" H_2O.*

Notes:

- *Shaded areas represent selectable area. Contact your local Trane® representative for more information.*
- *Supply fan performance curve includes internal resistance of rooftop. For total static pressure determination, system external static must be added to appropriate component static pressure drops (evaporator coil, filters, optional economizer, optional relief fan, optional heating system, optional cooling only extended casing, optional roof curb).*
- *Maximum Cfm (for cULus approval) as follows: 20 ton - 9,000 Cfm, 25 ton - 11,000 Cfm.*
- *Minimum motor horsepower is 3 hp. Maximum motor horsepower is 20 hp. Maximum fan RPM is 2400.*

Figure 43. Supply fan performance with or without variable frequency drive — 30 ton air-cooled, - forward curved

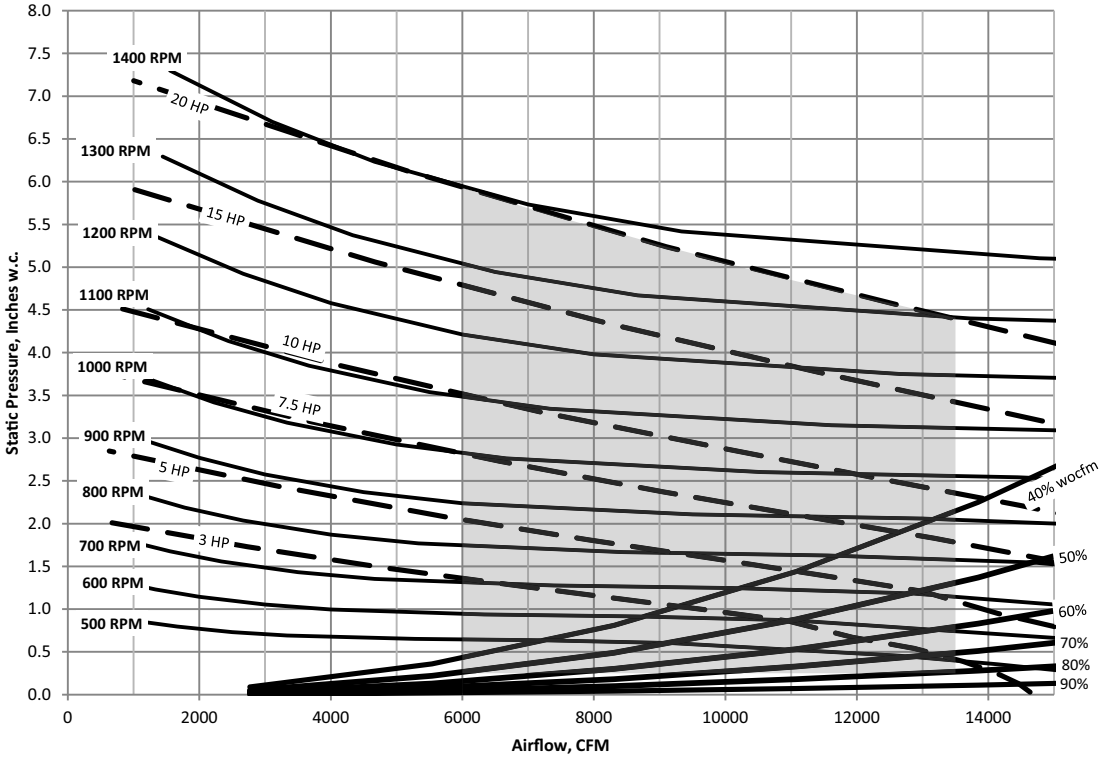

Important: *Maximum static pressure leaving the rooftop is 4.0" H_2O positive. The static pressure drops from the supply fan to the space cannot exceed 4.0" H_2O.*

Notes:

- *Shaded areas represent selectable area. Contact your local Trane® representative for more information.*
- *Supply fan performance curve includes internal resistance of rooftop. For total static pressure determination, system external static must be added to appropriate component static pressure drops (evaporator coil, filters, optional economizer, optional relief fan, optional heating system, optional cooling only extended casing, optional roof curb).*
- *Maximum Cfm (for cULus approval) as follows: 30 ton - 13,500 Cfm.*
- *Minimum motor horsepower is 5 hp. Maximum motor horsepower is 20 hp. Maximum fan RPM is 1450.*

Figure 44. Supply fan performance with variable frequency drive — 30 ton cooling only, 20/25 ton gas heat - direct drive plenum, 80% width

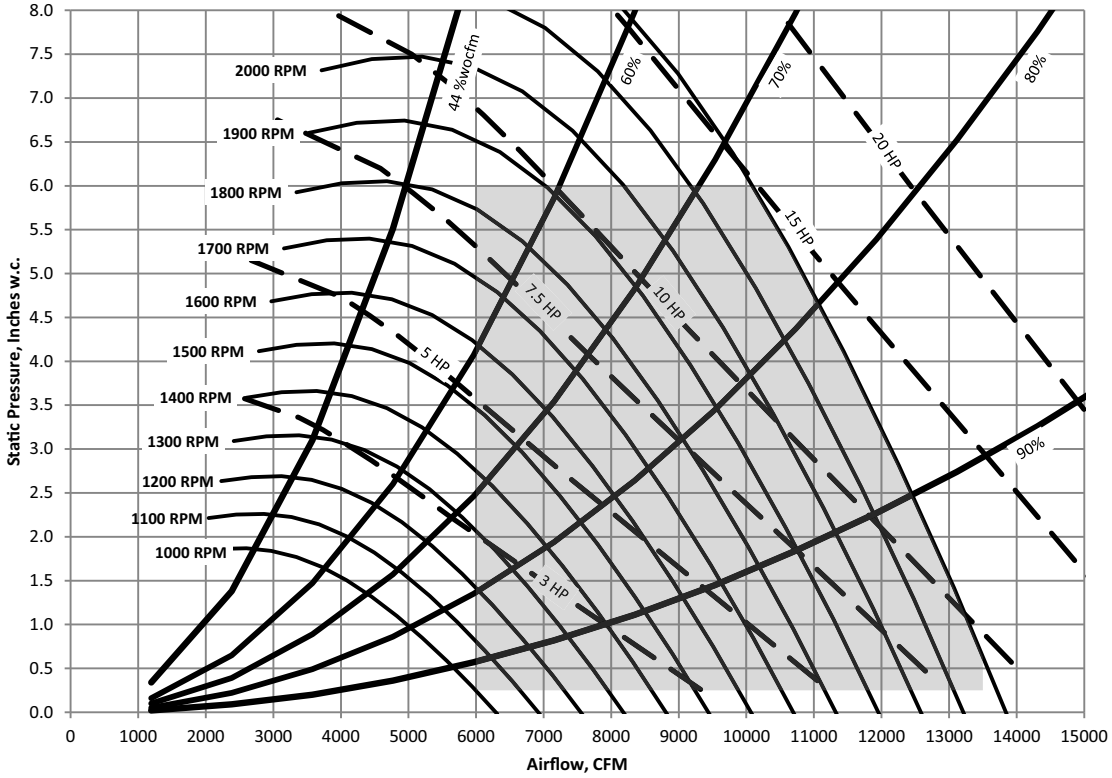

Important: *Maximum static pressure leaving the rooftop is 4.0" H_2O positive. The static pressure drops from the supply fan to the space cannot exceed 4.0" H_2O.*

Notes:

- *Shaded areas represent selectable area. Contact your local Trane® representative for more information.*
- *Supply fan performance curve includes internal resistance of rooftop. For total static pressure determination, system external static must be added to appropriate component static pressure drops (evaporator coil, filters, optional economizer, optional relief fan, optional heating system, optional cooling only extended casing, optional roof curb).*
- *Maximum Cfm (for cULus approval) as follows: 30 ton - 13,500 Cfm.*
- *Minimum motor horsepower is 3 hp. Maximum motor horsepower is 20 hp. Maximum fan RPM is 2200.*

Figure 45. Supply fan performance with variable frequency drive — 30 ton cooling only, 20/25 ton gas heat- direct drive plenum, 120% width

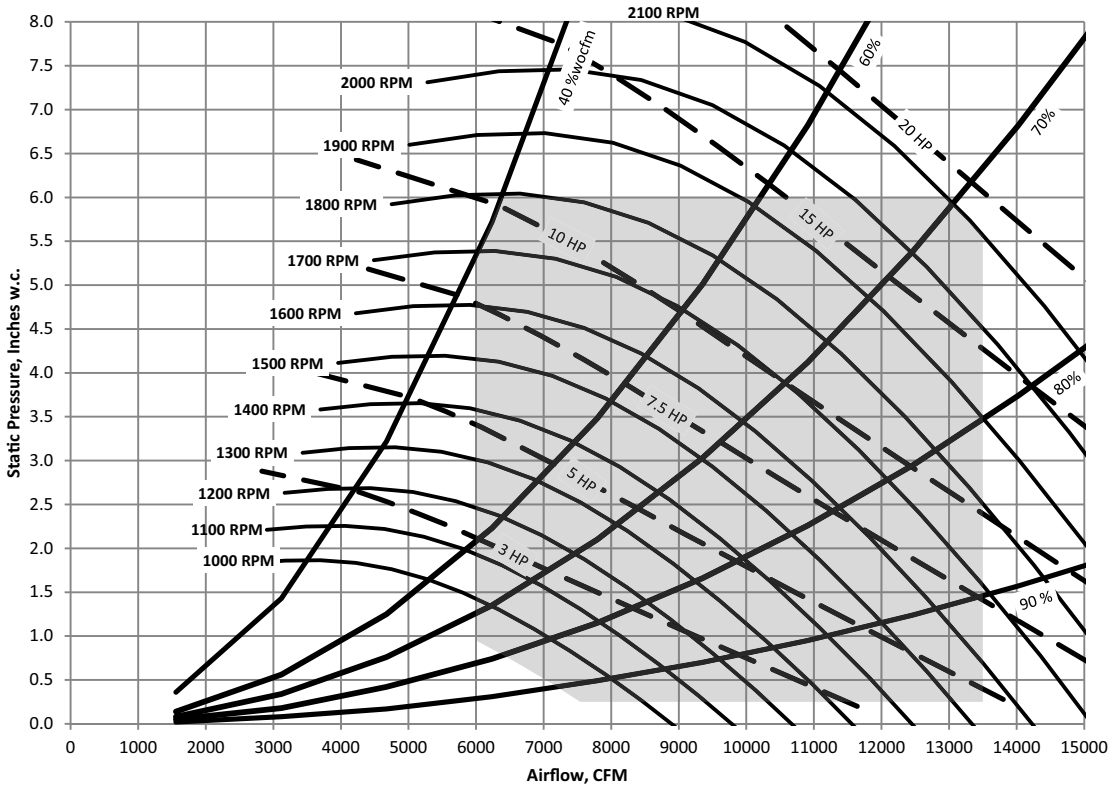

Important: *Maximum static pressure leaving the rooftop is 4.0" H_2O positive. The static pressure drops from the supply fan to the space cannot exceed 4.0" H_2O.*

Notes:

- *Shaded areas represent selectable area. Contact your local Trane® representative for more information.*
- *Supply fan performance curve includes internal resistance of rooftop. For total static pressure determination, system external static must be added to appropriate component static pressure drops (evaporator coil, filters, optional economizer, optional relief fan, optional heating system, optional cooling only extended casing, optional roof curb).*
- *Maximum Cfm (for cULus approval) as follows: 30 ton - 13,500 Cfm.*
- *Minimum motor horsepower is 3 hp. Maximum motor horsepower is 20 hp. Maximum fan RPM is 2,100.*

Figure 46. Supply fan performance with or without variable frequency drive - 40, 50 and 55 tons air-cooled, - forward curved

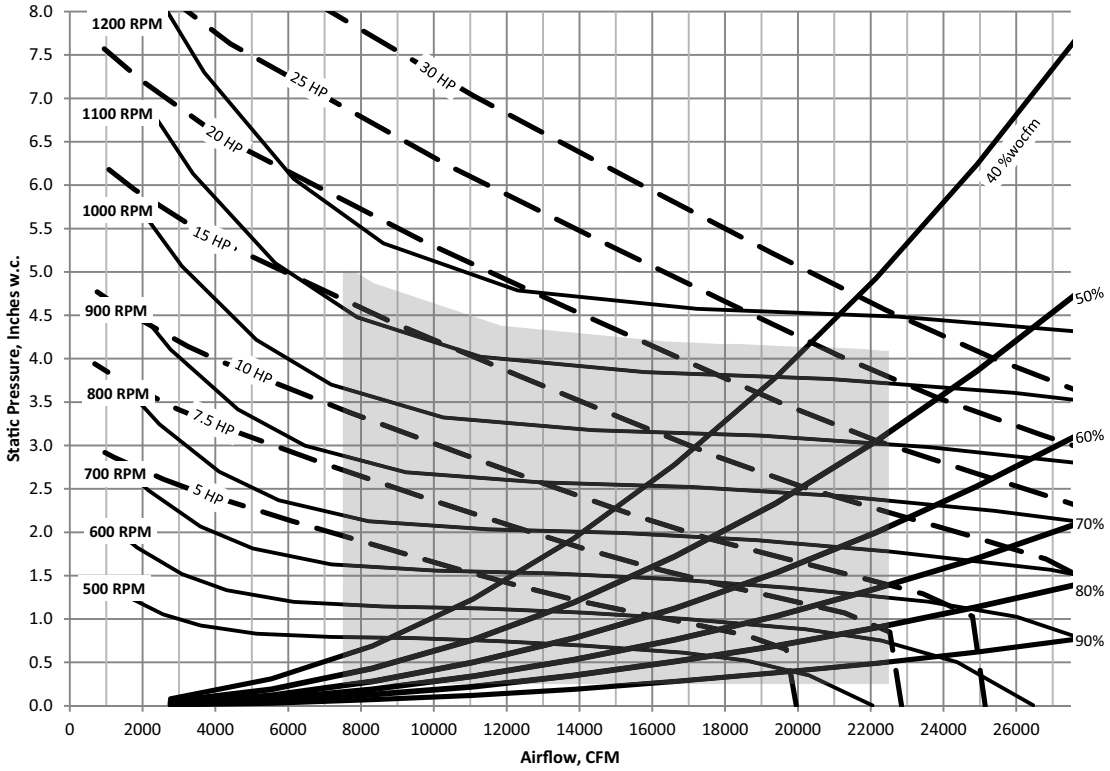

Important: *Maximum static pressure leaving the rooftop is 4.0" H_2O positive. The static pressure drops from the supply fan to the space cannot exceed 4.0" H_2O.*

Notes:

- *Fan performance for 40 and 50 to 55 ton rooftops is identical. Contact your local Trane® representative for information on oversized motors.*
- *Shaded areas represent selectable area. Contact your local Trane® representative for more information.*
- *Supply fan performance curve includes internal resistance of rooftop. For total static pressure determination, system external static must be added to appropriate component static pressure drops (evaporator coil, filters, optional economizer, optional relief fan, optional heating system, optional cooling only extended casing, optional roof curb).*
- *Maximum Cfm (for cULus approval) as follows: 40 ton - 18,000 Cfm and 50 ton - 22,500 Cfm.*
- *Minimum motor horsepower is 7.5 hp. Maximum motor horsepower is 30 hp. Maximum ½ hp to 15 hp fan Rpm is 1,141 Rpm, maximum 20 hp to 30 hp fan Rpm is 1,170 Rpm.*

Figure 47. Supply fan performance with variable frequency drive - 40 ton cooling only, 30 ton gas heat - direct drive plenum, 80% width

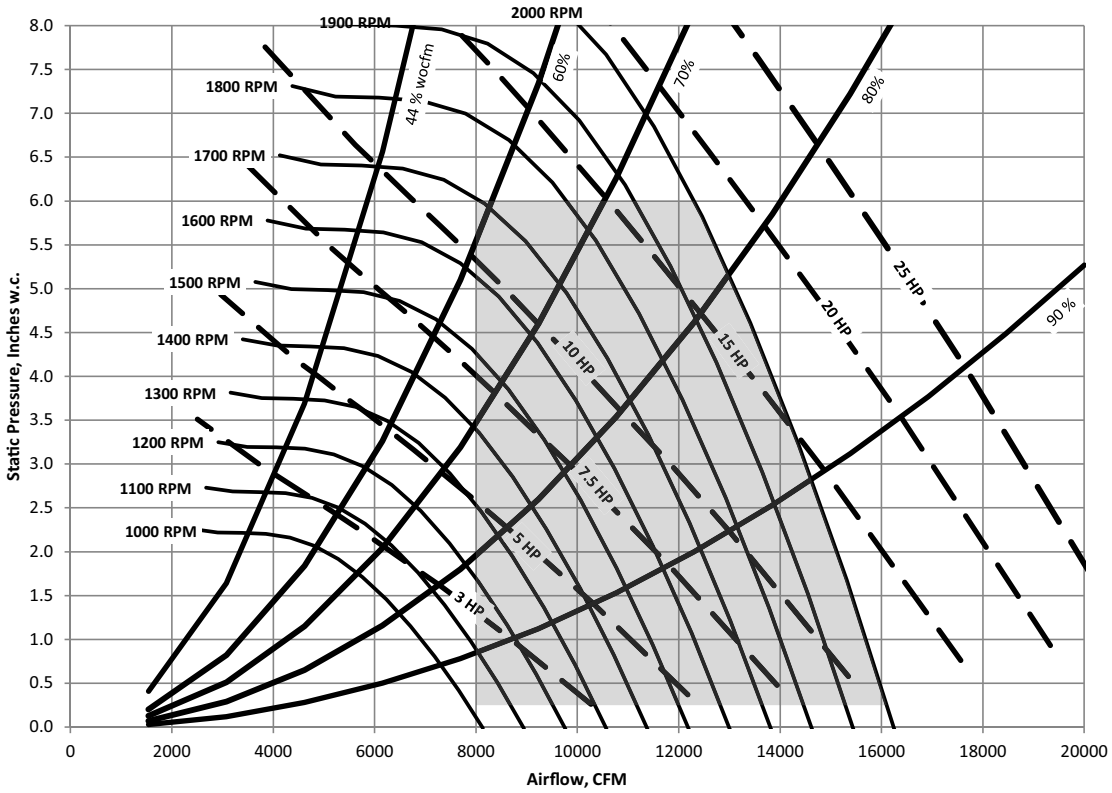

Important: *Maximum static pressure leaving the rooftop is 4.0" H_2O positive. The static pressure drops from the supply fan to the space cannot exceed 4.0" H_2O.*

Notes:

- *Shaded areas represent selectable area. Contact your local Trane® representative for more information.*
- *Supply fan performance curve includes internal resistance of rooftop. For total static pressure determination, system external static must be added to appropriate component static pressure drops (evaporator coil, filters, optional economizer, optional relief fan, optional heating system, optional cooling only extended casing, optional roof curb).*
- *Maximum Cfm (for cULus approval) as follows: 40 ton - 18,000 Cfm.*
- *Minimum motor horsepower is 3 hp. Maximum motor horsepower is 25 hp. Maximum fan RPM is 2,000.*

Figure 48. Supply fan performance with variable frequency drive - 40 ton cooling only - direct drive plenum, 120% width

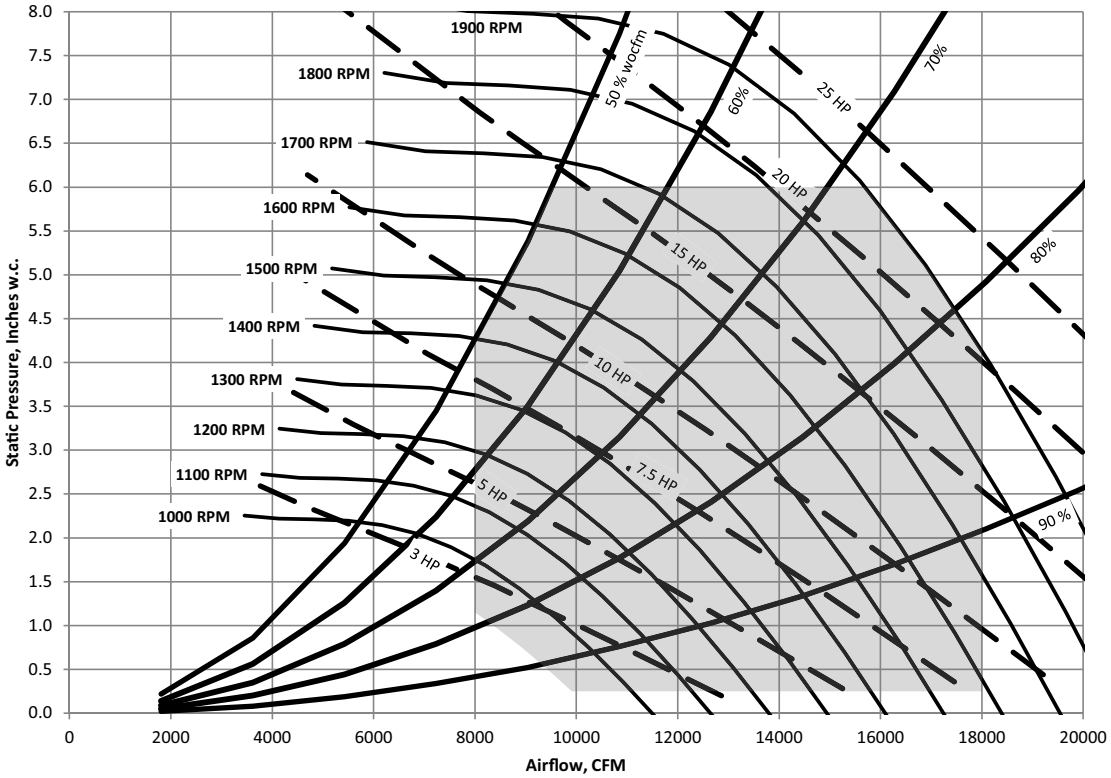

Important: *Maximum static pressure leaving the rooftop is 4.0" H_2O positive. The static pressure drops from the supply fan to the space cannot exceed 4.0" H_2O.*

Notes:

- *Shaded areas represent selectable area. Contact your local Trane® representative for more information.*
- *Supply fan performance curve includes internal resistance of rooftop. For total static pressure determination, system external static must be added to appropriate component static pressure drops (evaporator coil, filters, optional economizer, optional relief fan, optional heating system, optional cooling only extended casing, optional roof curb).*
- *Maximum Cfm (for cULus approval) as follows: 40 ton - 18,000 Cfm.*
- *Minimum motor horsepower is 3 hp. Maximum motor horsepower is 25 hp. Maximum fan RPM is 1,900.*

Figure 49. Supply fan performance with variable frequency drive - 50, 55 tons, 40 ton gas heat - direct drive plenum, 80% width

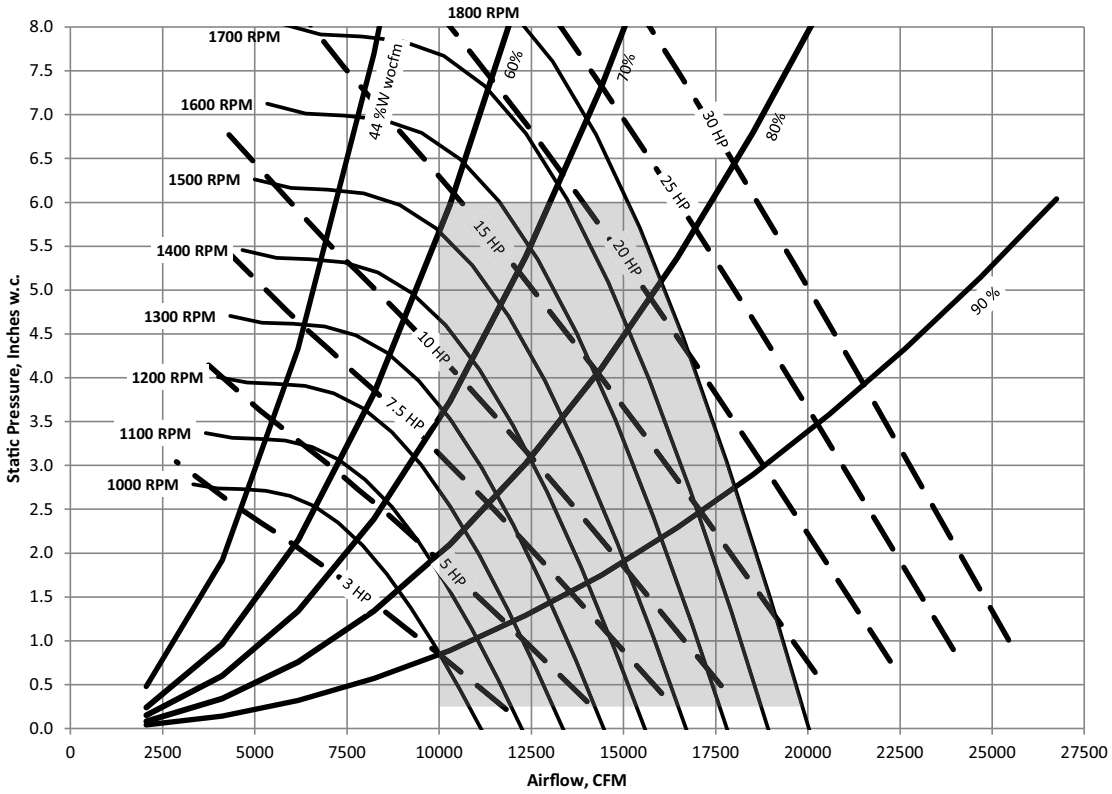

Important: *Maximum static pressure leaving the rooftop is 4.0" H_2O positive. The static pressure drops from the supply fan to the space cannot exceed 4.0" H_2O.*

Notes:

- *Shaded areas represent selectable area. Contact your local Trane® representative for more information.*
- *Supply fan performance curve includes internal resistance of rooftop. For total static pressure determination, system external static must be added to appropriate component static pressure drops (evaporator coil, filters, optional economizer, optional relief fan, optional heating system, optional cooling only extended casing, optional roof curb).*
- *Maximum Cfm (for cULus approval) as follows: 50, 55 tons - 22,500 Cfm.*
- *Minimum motor horsepower is 5 hp. Maximum motor horsepower is 30 hp. Maximum fan RPM is 1,800.*

Figure 50. Supply fan performance with variable frequency drive - 50, 55 tons, 40 ton gas heat - direct drive plenum, 100% width

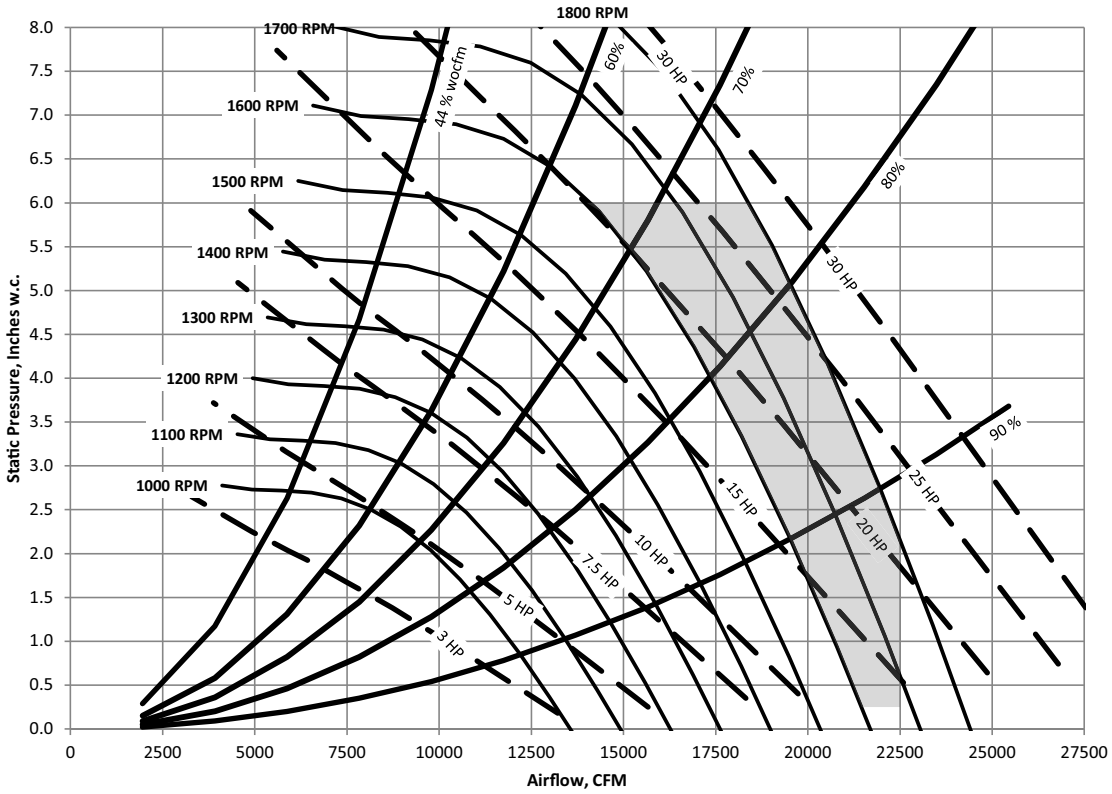

Important: *Maximum static pressure leaving the rooftop is 4.0" H_2O positive. The static pressure drops from the supply fan to the space cannot exceed 4.0" H_2O.*

Notes:

- *Shaded areas represent selectable area. Contact your local Trane® representative for more information.*
- *Supply fan performance curve includes internal resistance of rooftop. For total static pressure determination, system external static must be added to appropriate component static pressure drops (evaporator coil, filters, optional economizer, optional relief fan, optional heating system, optional cooling only extended casing, optional roof curb).*
- *Maximum Cfm (for cULus approval) as follows: 50, 55 tons - 22,500 Cfm.*
- *Minimum motor horsepower is 5 hp. Maximum motor horsepower is 30 hp. Maximum fan RPM is 1,800.*

Figure 51. Supply fan performance with variable frequency drive - 50, 55 tons, 40 ton gas heat - direct drive plenum, 120% width

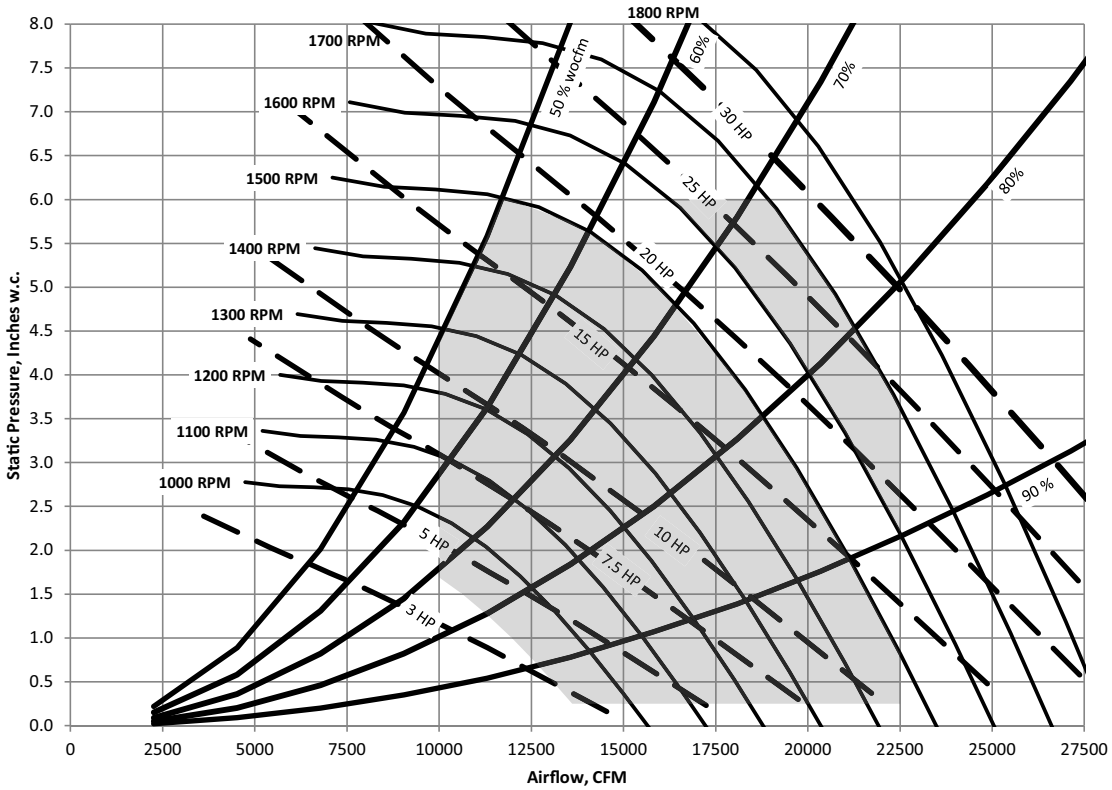

Important: *Maximum static pressure leaving the rooftop is 4.0" H_2O positive. The static pressure drops from the supply fan to the space cannot exceed 4.0" H_2O.*

Notes:

- *Shaded areas represent selectable area. Contact your local Trane® representative for more information.*
- *Supply fan performance curve includes internal resistance of rooftop. For total static pressure determination, system external static must be added to appropriate component static pressure drops (evaporator coil, filters, optional economizer, optional relief fan, optional heating system, optional cooling only extended casing, optional roof curb).*
- *Maximum Cfm (for cULus approval) as follows: 50, 55 tons - 22,500 Cfm.*
- *Minimum motor horsepower is 5 hp. Maximum motor horsepower is 30 hp. Maximum fan RPM is 1,700.*

Figure 52. Supply fan performance with or without variable frequency drive - 60, 70 and 75 tons air-cooled, - forward curved

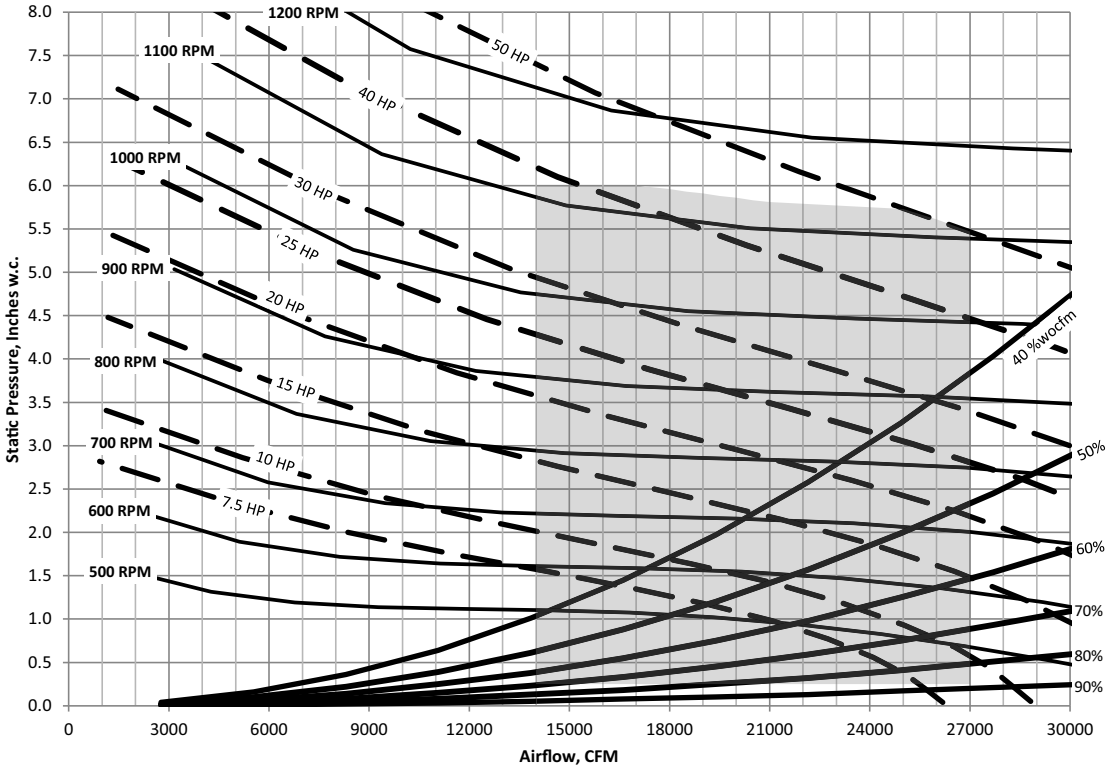

Important: *Maximum static pressure leaving the rooftop is 4.0" H_2O positive. The static pressure drops from the supply fan to the space cannot exceed 4.0" H_2O.*

Notes:

- *Fan performance for 60 and 70 to 75 tons rooftops is identical. Contact your local Trane® representative for information on oversized motors.*
- *Shaded areas represent selectable area. Contact your local Trane® representative for more information.*
- *Supply fan performance curve includes internal resistance of rooftop. For total static pressure determination, system external static must be added to appropriate component static pressure drops (evaporator coil, filters, optional economizer, optional relief fan, optional heating system, optional cooling only extended casing, optional roof curb).*
- *Maximum Cfm (for cULus approval) as follows: 60 to 75 tons - 27,000 Cfm and 50 ton - 22,500 Cfm.*
- *Minimum motor horsepower is 10 hp. Maximum motor horsepower is 50 hp. Maximum fan Rpm is 1,130 Rpm. 40 and 50 HP motor available as standard in 460 and 575 volt only*

Figure 53. Supply fan performance with variable frequency drive - 60 ton cooling only air-cooled - direct drive plenum, 80% width

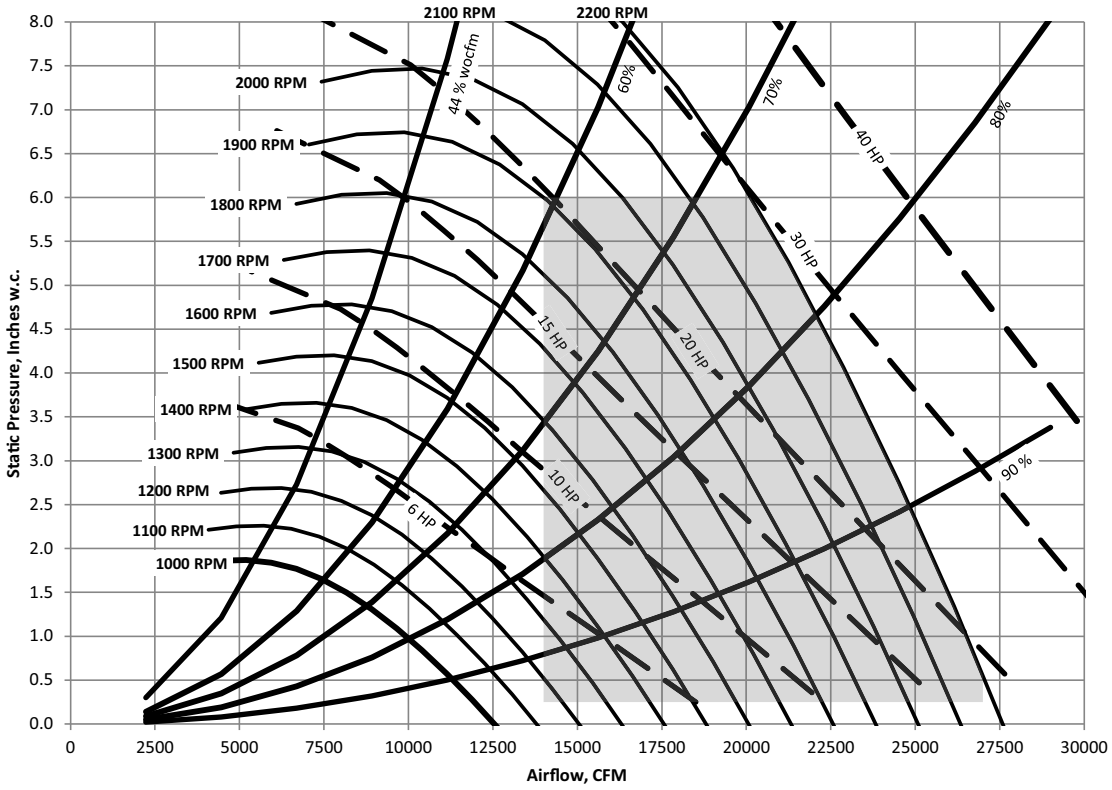

Important: *Maximum static pressure leaving the rooftop is 4.0" H_2O positive. The static pressure drops from the supply fan to the space cannot exceed 4.0" H_2O.*

Notes:

- *Shaded areas represent selectable area. Contact your local Trane® representative for more information.*
- *60 ton units with gas heat use the 30" DDP fans. See Figure 59, p. 88 .*
- *Supply fan performance curve includes internal resistance of rooftop. For total static pressure determination, system external static must be added to appropriate component static pressure drops (evaporator coil, filters, optional economizer, optional relief fan, optional heating system, optional cooling only extended casing, optional roof curb).*
- *Maximum Cfm (for cULus approval) as follows: 60 ton - 27,000 Cfm.*
- *Minimum motor horsepower is 10 hp (2 x 5 hp motors). Maximum motor horsepower is 40 hp (2 x 20 hp motors). Maximum fan RPM is 2,200.*

Figure 54. Supply fan performance with variable frequency drive - 60 ton cooling only air-cooled - direct drive plenum, 120% width

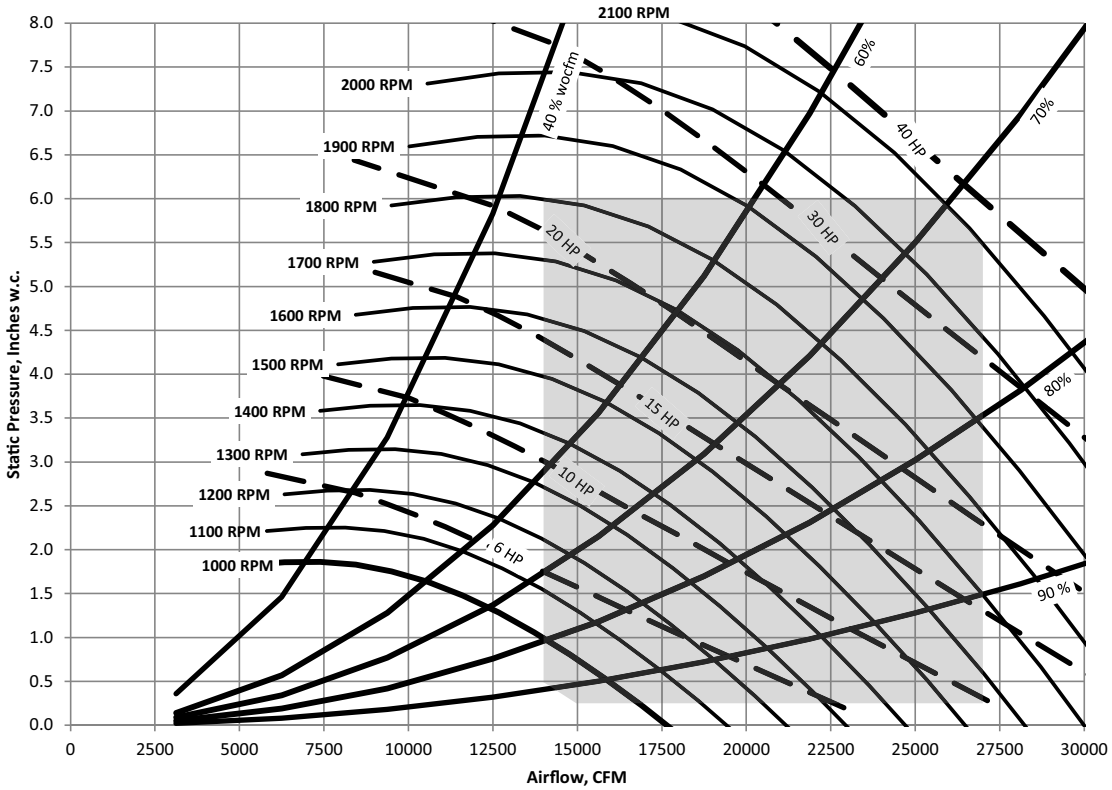

Important: *Maximum static pressure leaving the rooftop is 4.0" H_2O positive. The static pressure drops from the supply fan to the space cannot exceed 4.0" H_2O.*

Notes:

- *Shaded areas represent selectable area. Contact your local Trane® representative for more information.*
- *60 ton units with gas heat use the 30" DDP fans. See Figure 60, p. 89 .*
- *Supply fan performance curve includes internal resistance of rooftop. For total static pressure determination, system external static must be added to appropriate component static pressure drops (evaporator coil, filters, optional economizer, optional relief fan, optional heating system, optional cooling only extended casing, optional roof curb).*
- *Maximum Cfm (for cULus approval) as follows: 60 ton - 27,000 Cfm.*
- *Minimum motor horsepower is 10 hp (2 x 5 hp motors). Maximum motor horsepower is 40 hp (2 x 20 hp motors). Maximum fan RPM is 2,100.*

Figure 55. Supply fan performance with variable frequency drive - 60 ton gas heat, and all 70 and 75 tons cooling only - direct drive plenum, 80% width

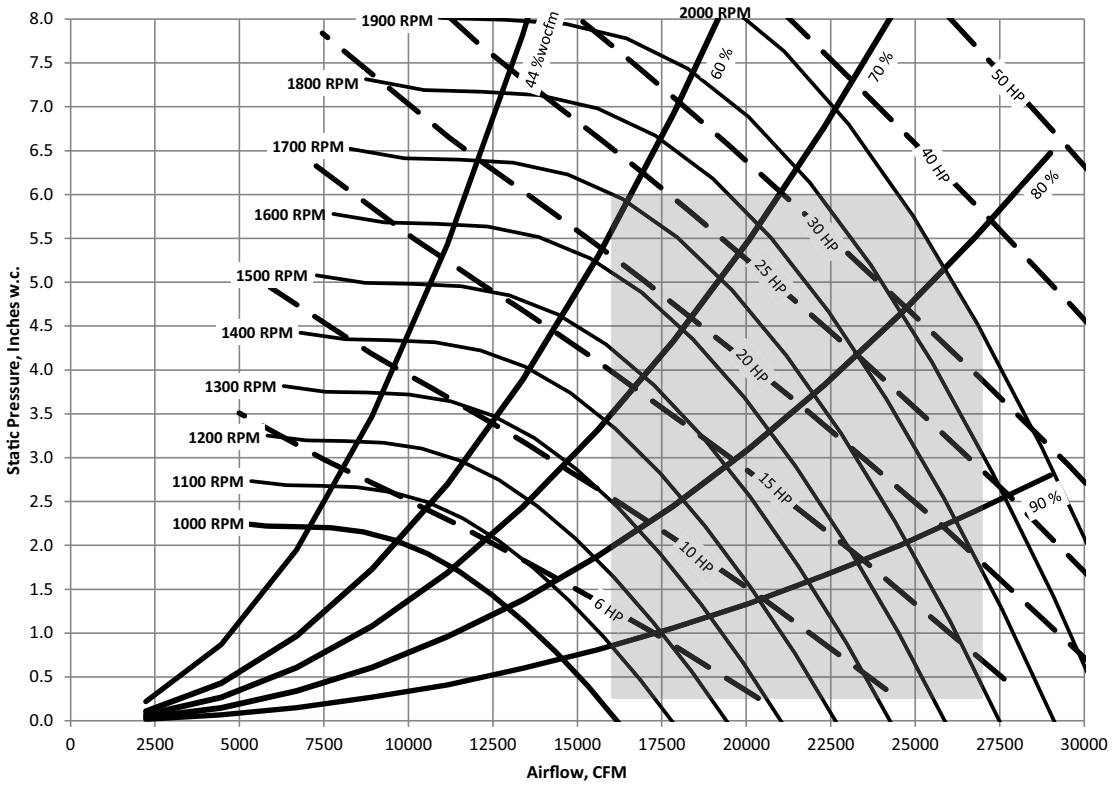

Important: *Maximum static pressure leaving the rooftop is 4.0" H_2O positive. The static pressure drops from the supply fan to the space cannot exceed 4.0" H_2O.*

Notes:

- *Shaded areas represent selectable area. Contact your local Trane® representative for more information.*
- *70-75 ton gas heat units use 30" DDP fans. See Figure 59, p. 88.*
- *Supply fan performance curve includes internal resistance of rooftop. For total static pressure determination, system external static must be added to appropriate component static pressure drops (evaporator coil, filters, optional economizer, optional relief fan, optional heating system, optional cooling only extended casing, optional roof curb).*
- *Maximum Cfm (for cULus approval) as follows: 60 ton gas heat and 70, 75 tons - 27,000 Cfm.*
- *Minimum motor horsepower is 10 hp (2 x 5 hp motors). Maximum motor horsepower is 50 hp (2 x 25 hp motors). Maximum fan RPM is 2,000.*

Figure 56. Supply fan performance with variable frequency drive - 60 ton gas heat, and all 70 and 75 tons cooling only- direct drive plenum, 120% width

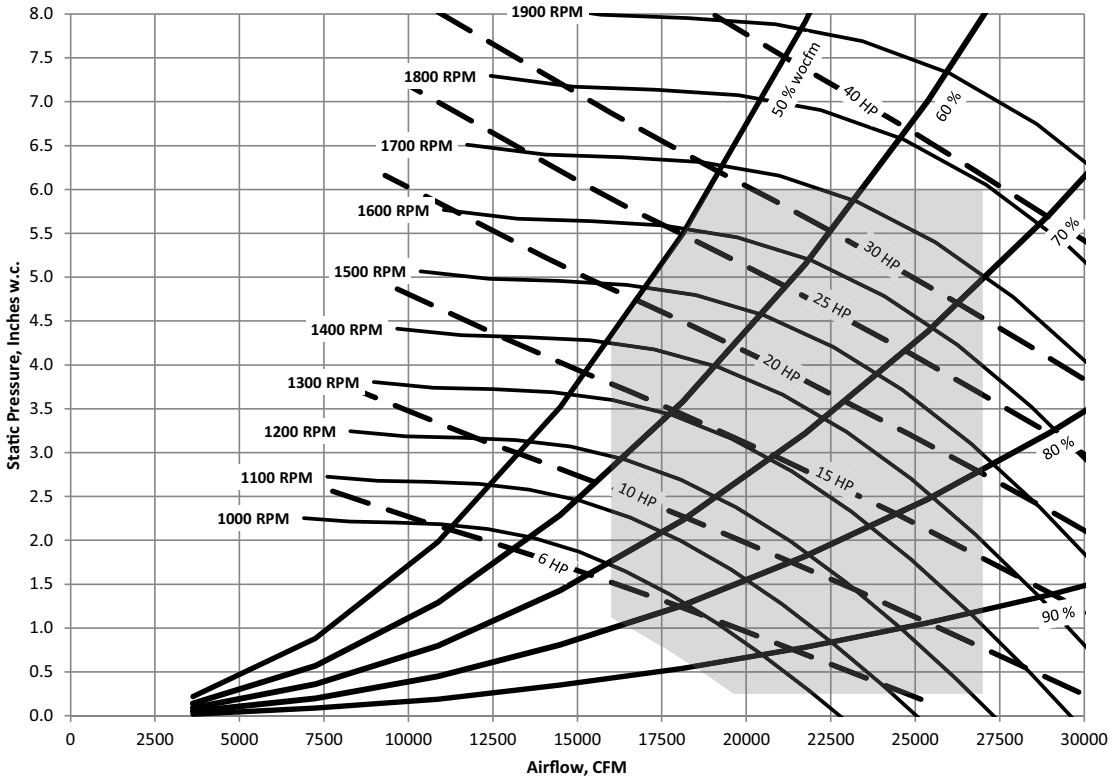

Important: *Maximum static pressure leaving the rooftop is 4.0" H_2O positive. The static pressure drops from the supply fan to the space cannot exceed 4.0" H_2O.*

Notes:

- *Shaded areas represent selectable area. Contact your local Trane® representative for more information.*
- *70-75 ton gas heat units use 30" DDP fans. See Figure 59, p. 88.*
- *Supply fan performance curve includes internal resistance of rooftop. For total static pressure determination, system external static must be added to appropriate component static pressure drops (evaporator coil, filters, optional economizer, optional relief fan, optional heating system, optional cooling only extended casing, optional roof curb).*
- *Maximum Cfm (for cULus approval) as follows: 60 ton gas heat and 70, 75 tons - 27,000 Cfm.*
- *Minimum motor horsepower is 10 hp (2 x 5 hp motors). Maximum motor horsepower is 50 hp (2 x 25 hp motors). Maximum fan RPM is 1,900.*

Figure 57. Supply fan performance with variable frequency drive - 60, 70, and 75 tons gas heat, direct drive plenum, 80% width

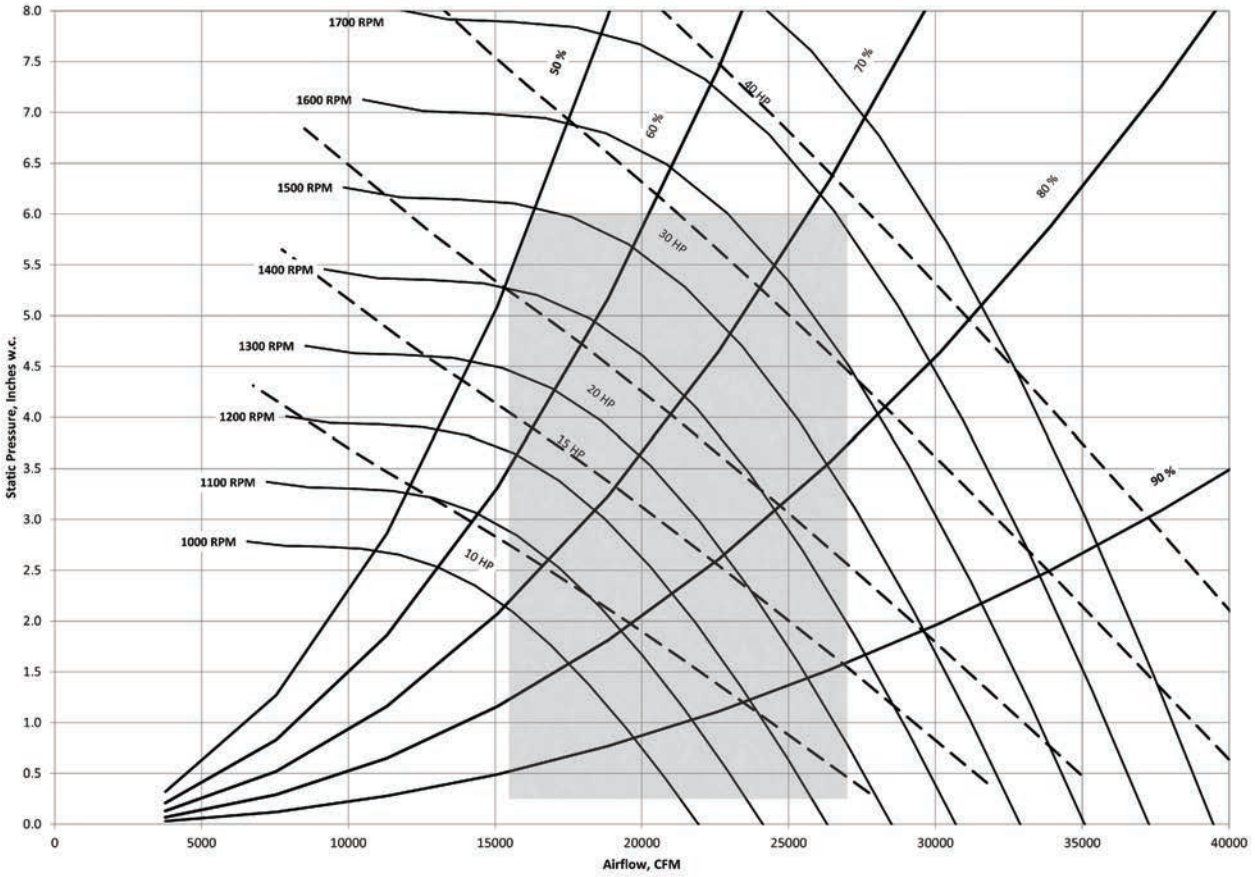

Important: *Maximum static pressure leaving the rooftop is 4.0" H_2O positive. The static pressure drops from the supply fan to the space cannot exceed 4.0" H_2O.*

Notes:

- *Shaded areas represent selectable area. Contact your local Trane® representative for more information.*
- *Supply fan performance curve includes internal resistance of rooftop. For total static pressure determination, system external static must be added to appropriate component static pressure drops (evaporator coil, filters, optional economizer, optional relief fan, optional heating system, optional cooling only extended casing, optional roof curb).*
- *Maximum Cfm (for cULus approval) as follows: 60, 70, and 75 tons gas heat - 27,000 Cfm.*
- *Minimum motor horsepower is 10 hp (2 x 5 hp motors). Maximum motor horsepower is 40 hp (2 x 20 hp motors). Maximum fan RPM is 1,700.*

Figure 58. Supply fan performance with variable frequency drive - 60, 70, and 75 tons gas heat, direct drive plenum, 100% width

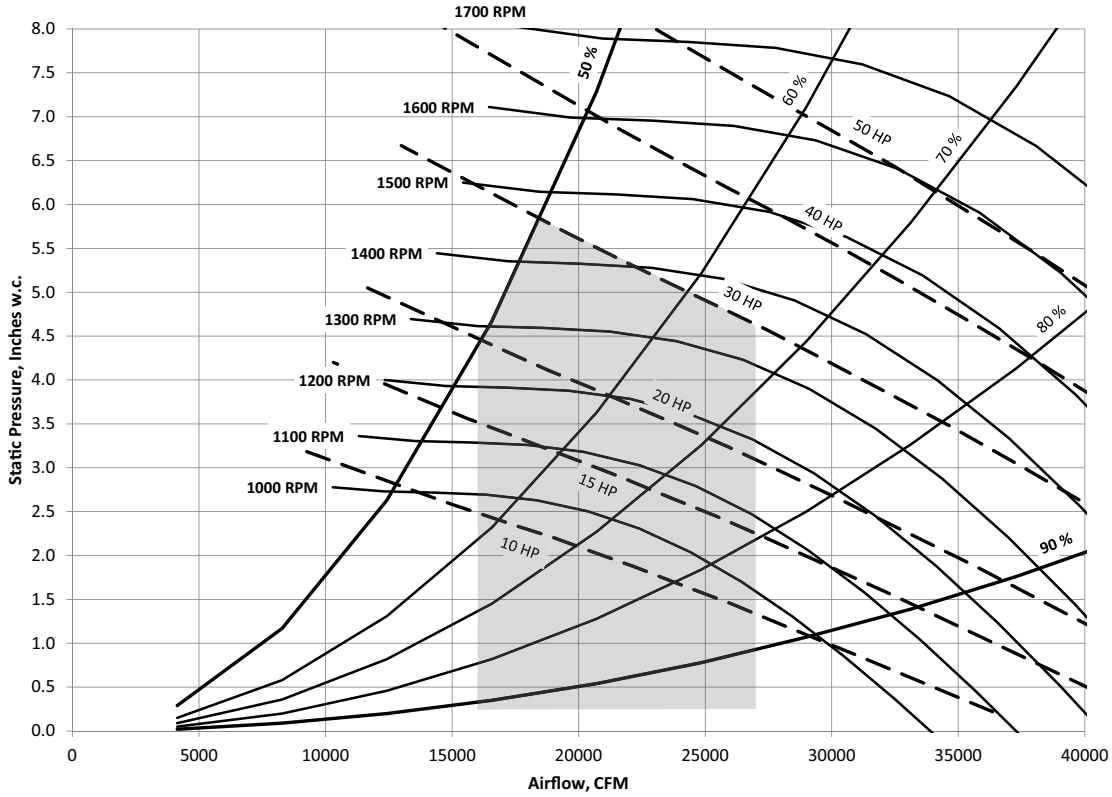

Important: *Maximum static pressure leaving the rooftop is 4.0" H_2O positive. The static pressure drops from the supply fan to the space cannot exceed 4.0" H_2O.*

Notes:

- *Shaded areas represent selectable area. Contact your local Trane® representative for more information.*
- *Supply fan performance curve includes internal resistance of rooftop. For total static pressure determination, system external static must be added to appropriate component static pressure drops (evaporator coil, filters, optional economizer, optional relief fan, optional heating system, optional cooling only extended casing, optional roof curb).*
- *Maximum Cfm (for cULus approval) as follows: 60, 70, and 75 tons gas heat - 27,000 Cfm.*
- *Minimum motor horsepower is 10 hp (2 x 5 hp motors). Maximum motor horsepower is 30 hp (2 x 15 hp motors). Maximum fan RPM is 1,500.*

Figure 59. Supply fan performance with or without variable frequency drive - 90 ton air-cooled

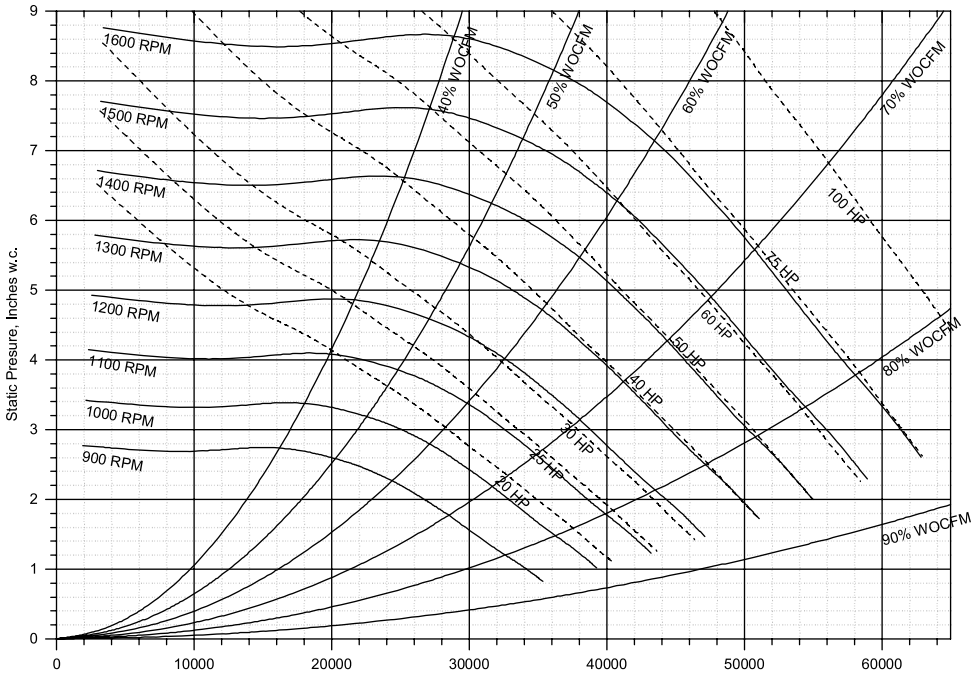

Important: *Maximum static pressure leaving the rooftop is 4.0" H_2O positive. The static pressure drops from the supply fan to the space cannot exceed 4.0" H_2O.*

Notes:

- *Supply fan performance curve includes internal resistance of rooftop. For total static pressure determination, system external static must be added to appropriate component static pressure drops (evaporator coil, filters, optional economizer, optional relief fan, optional heating system, optional cooling only extended casing, optional roof curb).*
- *Maximum Cfm (for cULus approval) as follows: 90 ton - 46,000 Cfm.*
- *Minimum motor horsepower is 30 hp.*

Figure 60. Supply fan performance with or without variable frequency drive - 105, 115, 130 ton air-cooled

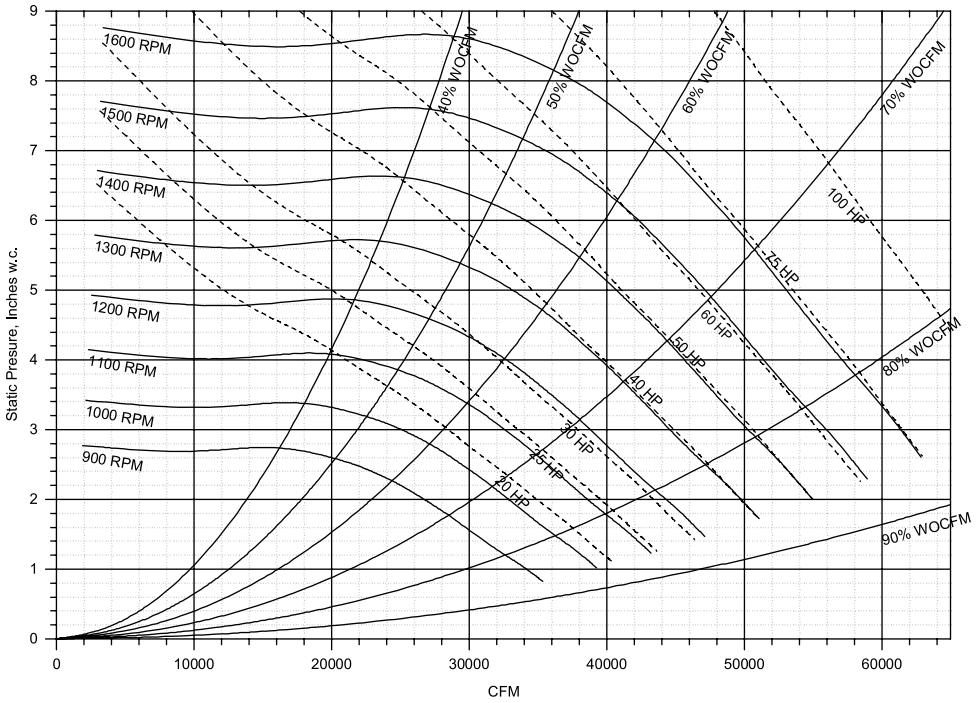

Important: *Maximum static pressure leaving the rooftop is 4.0" H_2O positive. The static pressure drops from the supply fan to the space cannot exceed 4.0" H_2O.*

Notes:

- *Supply fan performance curve includes internal resistance of rooftop. For total static pressure determination, system external static must be added to appropriate component static pressure drops (evaporator coil, filters, optional economizer, optional relief fan, optional heating system, optional cooling only extended casing, optional roof curb).*
- *Maximum Cfm (for cULus approval) as follows: 105, 115, 130 ton - 46,000 Cfm.*
- *Minimum motor horsepower is 30 hp.*

Pressure Drop Tables

Figure 61. Wet airside pressure drop at 0.075 lb/cu.ft. 20 to 75 ton evaporator coil

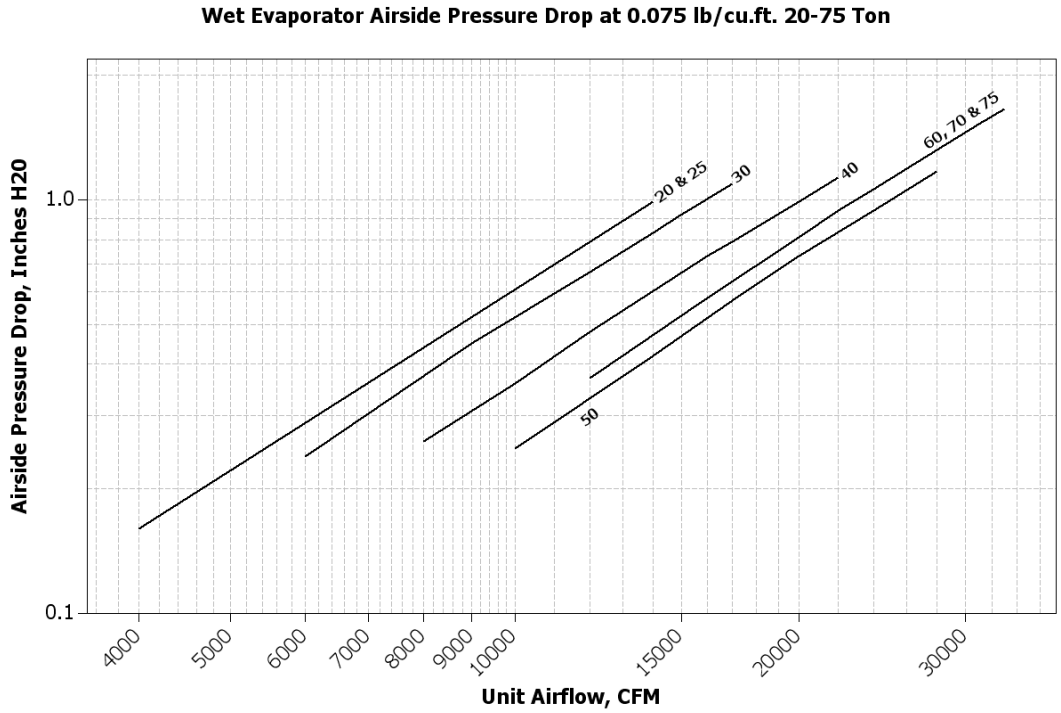

Figure 62. Dry airside pressure drop at 0.075 lb/cu.ft. 20 to 75 ton evaporator coil

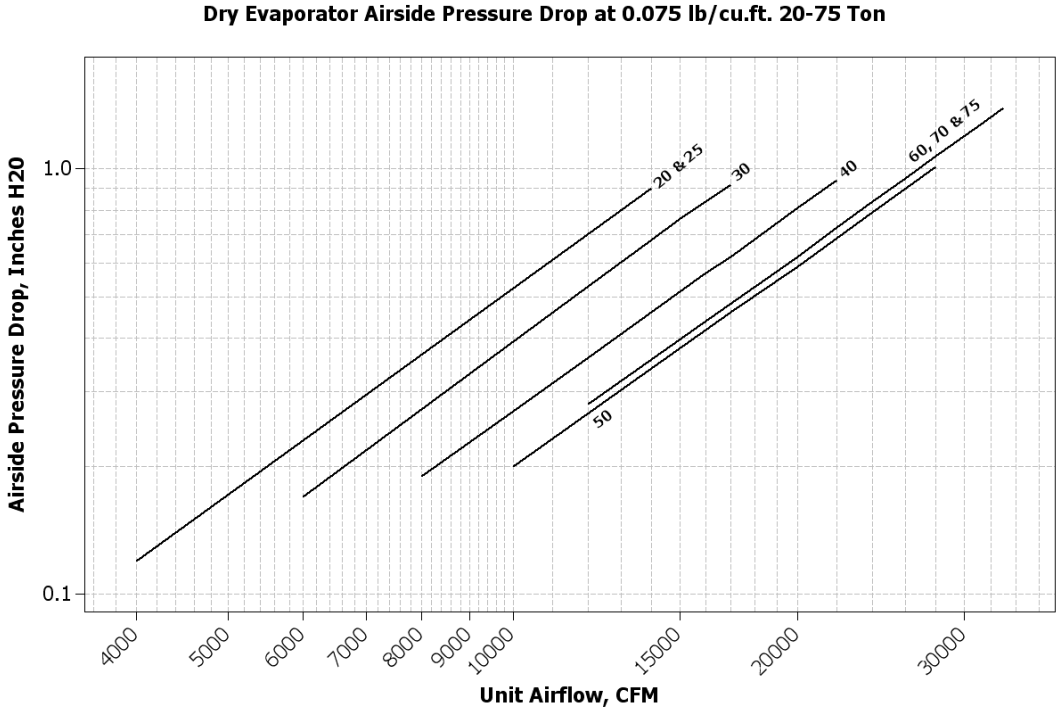

Figure 63. Wet airside pressure drop at 0.075 lb/cu.ft. 90 to 130 ton evaporator coil

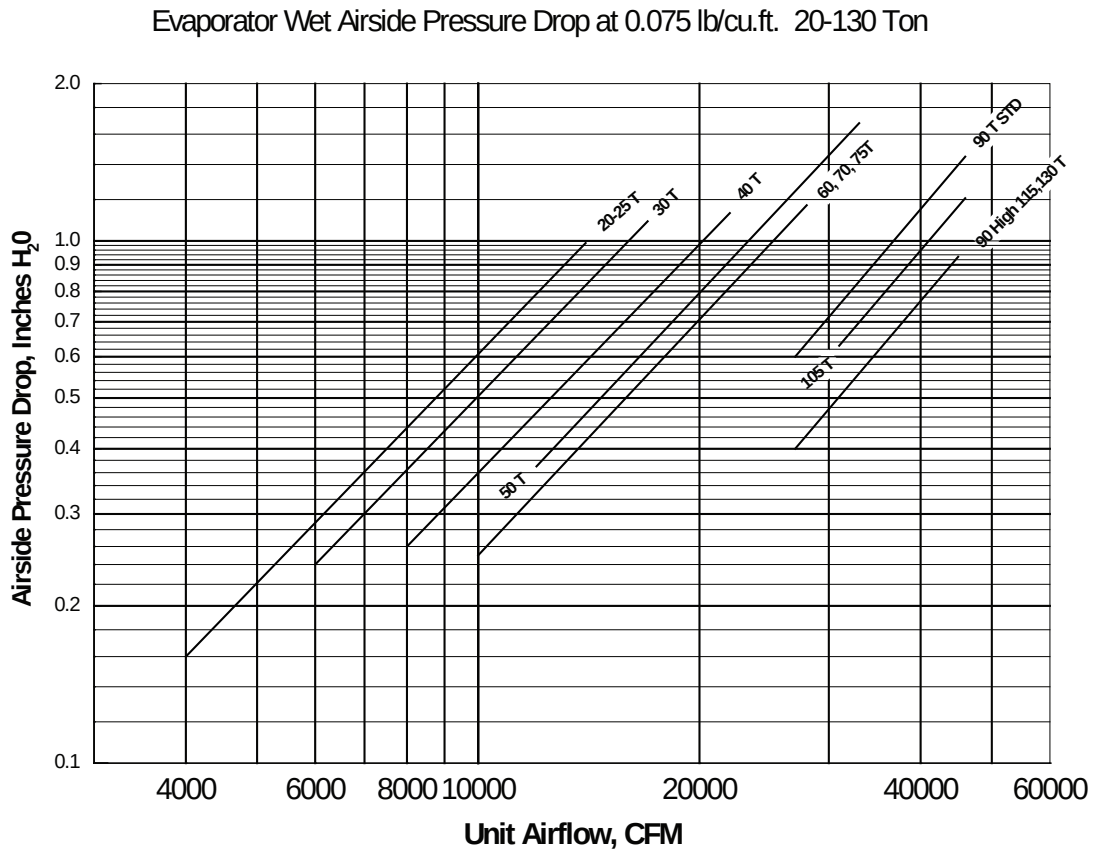

Figure 64. Dry airside pressure drop at 0.075 lb/cu.ft. 90 to 130 ton evaporator coil

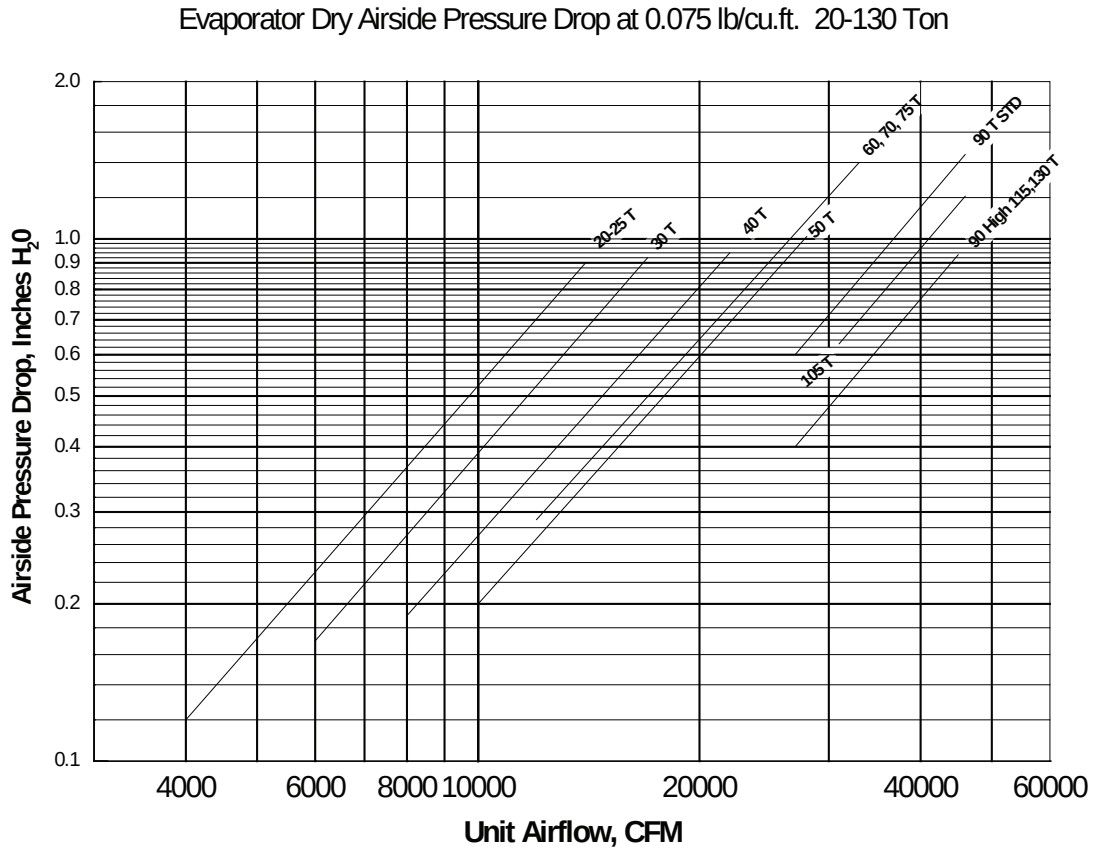

Table 37. Component static pressure drops (in. W.G.), 20 to 75 tons air-cooled

Nom	CFM Std	Evap Coil		Heating System										Filters						Std Roof	Econ w/ or w/out Relief	HGRH
				SFH_ - FC		SFH_ - DDP		SHE_	SLH_		SSH_		Throwaway		Perm Wire	Bag & Pre	Cart & Pre	Final Cart				
		Dry	Wet	Low	High	Low	High	All kW	Low	High	Low	High	Std	High								
20	4000	0.12	0.16	0.02	N/A	0.09	N/A	0.02	0.05	0.06	0.02	0.06	0.03	0.03	0.01	0.30	0.24	0.22	0.01	0.03	0.01
	6000	0.24	0.29	0.05	0.05	0.21	0.22	0.04	0.09	0.12	0.05	0.12	0.06	0.06	0.02	0.50	0.44	0.30	0.02	0.06	0.02
	8000	0.37	0.44	0.09	0.09	0.37	0.39	0.07	0.15	0.19	0.10	0.20	0.09	0.09	0.03	0.71	0.68	0.45	0.05	0.12	0.04
	9000	0.45	0.52	0.12	0.12	0.48	0.50	0.09	0.19	0.24	0.12	0.22	0.11	0.11	0.04	0.83	0.81	0.55	0.07	0.15	0.05
25	5000	0.18	0.22	0.03	N/A	0.04	N/A	0.03	0.07	0.09	0.04	0.09	0.05	0.05	0.02	0.40	0.34	0.25	0.01	0.03	0.01
	6000	0.24	0.29	0.05	0.05	0.21	0.22	0.04	0.10	0.12	0.06	0.13	0.07	0.07	0.02	0.50	0.44	0.30	0.02	0.05	0.02
	7500	0.34	0.41	0.08	0.08	0.31	0.35	0.06	0.14	0.17	0.09	0.18	0.09	0.09	0.03	0.66	0.62	0.41	0.04	0.10	0.03
	10000	0.53	0.62	0.14	0.15	0.58	0.61	0.11	0.23	0.28	0.15	0.29	0.13	0.13	0.05	0.95	0.95	0.66	0.10	0.19	0.06
	11000	0.62	0.71	0.17	0.18	0.71	0.74	0.13	0.29	0.33	0.19	0.35	0.15	0.15	0.06	1.06	1.11	0.79	0.12	0.23	0.07
30	6000	0.17	0.24	0.05	0.05	0.08	0.13	0.04	0.09	0.12	0.05	0.12	0.04	0.04	0.01	0.34	0.26	0.24	0.02	0.06	0.02
	9000	0.33	0.45	0.11	0.12	0.17	0.29	0.09	0.19	0.24	0.12	0.22	0.07	0.07	0.02	0.54	0.48	0.36	0.07	0.15	0.04
	12000	0.53	0.67	0.20	0.21	0.30	0.51	0.16	0.31	0.39	0.22	0.41	0.11	0.11	0.04	0.75	0.75	0.58	0.16	0.27	0.07
	14000	0.68	0.83	0.26	0.29	0.39	0.69	0.22	0.40	0.51	0.30	0.50	0.14	0.14	0.06	0.95	0.95	0.76	0.25	0.39	0.09
40	8000	0.19	0.26	0.09	N/A	0.13	n/a	0.07	0.09	0.11	0.05	0.11	0.04	0.04	0.02	0.37	0.31	0.25	0.01	0.03	0.02
	10000	0.27	0.36	0.14	0.11	0.20	0.37	0.11	0.13	0.16	0.08	0.16	0.06	0.06	0.02	0.49	0.43	0.32	0.02	0.03	0.03
	12000	0.36	0.48	0.20	0.15	0.28	0.47	0.16	0.17	0.22	0.11	0.21	0.08	0.08	0.03	0.61	0.56	0.41	0.04	0.07	0.05
	16000	0.57	0.73	0.34	0.26	0.49	0.70	0.29	0.28	0.36	0.20	0.36	0.12	0.12	0.05	0.88	0.87	0.66	0.10	0.09	0.08
	17000	0.62	0.79	N/A	0.29	0.55	0.77	0.32	0.31	0.39	0.22	0.41	0.13	0.13	0.06	0.95	0.95	0.74	0.12	0.11	0.10
	18000	0.68	0.86	N/A	0.33	N/A	0.83	0.36	0.35	0.43	0.25	0.44	0.14	0.14	0.07	1.02	1.04	0.83	0.14	0.13	0.11
50-55	10000	0.20	0.25	0.12	0.10	0.20	N/A	0.11	0.13	0.16	0.07	0.15	0.04	0.04	0.01	0.37	0.30	0.25	0.03	0.05	0.03
	14000	0.34	0.42	0.26	0.20	0.38	0.17	0.22	0.22	0.28	0.15	0.28	0.07	0.07	0.03	0.56	0.50	0.37	0.07	0.08	0.05
	17000	0.46	0.57	0.39	0.29	0.55	0.26	0.32	0.31	0.40	0.22	0.41	0.10	0.10	0.04	0.72	0.68	0.50	0.12	0.11	0.08
	20000	0.59	0.73	0.58	0.41	0.75	0.38	0.44	0.42	0.52	0.30	0.51	0.12	0.12	0.05	0.88	0.88	0.66	0.19	0.17	0.11
	23000	0.74	0.89	0.69	0.54	0.99	0.53	0.58	0.47	0.67	0.41	0.69	0.15	0.15	0.07	1.05	N/A	0.87	0.27	0.22	0.14
60	12000	0.27	0.37	0.10	0.08	0.28	0.14	0.06	0.10	0.13	0.06	0.11	0.05	0.05	0.01	0.44	0.37	0.27	0.02	0.07	0.03
	16000	0.43	0.58	0.18	0.14	0.44	0.28	0.11	0.17	0.21	0.11	0.19	0.07	0.07	0.02	0.63	0.58	0.39	0.05	0.10	0.06
	20000	0.62	0.80	0.27	0.21	0.63	0.46	0.17	0.24	0.31	0.16	0.27	0.10	0.10	0.03	0.84	0.82	0.56	0.10	0.16	0.09
	24000	0.83	1.03	0.40	0.30	0.86	0.68	0.24	0.33	0.42	0.22	0.39	0.11	0.11	0.04	1.06	1.08	0.78	0.16	0.23	0.13
	27000	1.00	1.22	0.46	0.32	1.05	0.88	0.30	0.41	0.52	0.30	0.47	0.16	0.16	0.06	1.18	1.24	0.98	0.27	0.28	0.16
70-75	16000	0.44	0.58	0.18	0.14	0.44	0.28	0.11	0.17	0.21	0.11	0.19	0.07	0.07	0.02	0.63	0.58	0.39	0.05	0.10	0.06
	20000	0.62	0.82	0.27	0.21	0.63	0.46	0.17	0.24	0.31	0.16	0.27	0.10	0.10	0.03	0.84	0.82	0.56	0.10	0.16	0.09
	22000	0.73	0.94	0.33	0.25	0.74	0.56	0.20	0.29	0.37	0.19	0.33	0.12	0.12	0.04	0.95	0.95	0.66	0.13	0.20	0.11
	24000	0.84	1.07	0.40	0.30	0.86	0.68	0.24	0.33	0.42	0.22	0.39	0.14	0.14	0.04	1.06	1.08	0.78	0.16	0.23	0.13
	26000	0.95	1.20	0.47	0.32	0.98	0.81	0.28	0.39	0.49	0.27	0.45	0.16	0.16	0.05	1.17	1.23	0.91	0.23	0.26	0.15
	27000	1.01	1.26	0.51	0.33	1.05	0.88	0.30	0.42	0.52	0.30	0.48	0.17	0.17	0.06	1.12	1.26	0.98	0.27	0.28	0.16

Notes:

1. Static pressure drops of accessory components must be added to external static pressure to enter fan selection tables.
2. Gas heat section maximum temperature rise of 60° F.
3. Throwaway filter option limited to 300 ft/min face velocity.
4. Bag filter option limited to 740 ft/min face velocity.
5. Horizontal roof curbs assume 0.50" static pressure drop or double the standard roof curb pressure drop, whichever is greater.
6. No additional pressure loss for model SXH_.
7. For final filters w/ prefilters (digit 13 = M, N, P, Q) also add pressure drop for throwaway filter.

Table 38. Component static pressure drops (in. W.G.), 90 to 130 tons air-cooled

Nom	CFM Std	Evap Coil		High Cap Evap		Heating System							Filters						Std Roof	Econ w/ or w/ out Relief
						SFHL		SEHL	SLHL		SSHL		Throwaway		Perm Wire	Bag & Pre	Cart & Pre	Final Cart		
		Dry	Wet	Dry	Wet	Low	High	All kW	Low	High	Low	High	Std	High						
90	27000	0.40	0.53	0.60	0.80	N/A	0.25	0.13	0.26	0.31	0.22	0.32	0.11	0.13	N/A	0.68	0.65	0.77	N/A	0.20
	32000	0.53	0.70	0.80	1.03	N/A	0.31	0.16	0.35	0.41	0.30	0.43	0.14	0.16	N/A	0.84	0.84	1.07	N/A	0.31
	37000	0.67	0.88	1.01	1.32	N/A	0.39	0.23	0.45	0.52	0.40	0.55	0.17	0.19	N/A	1.02	1.04	1.43	N/A	0.41
	42000	0.83	1.08	1.25	1.62	N/A	0.46	0.29	0.56	0.65	0.50	0.68	0.21	0.22	N/A	1.19	1.06	1.86	N/A	0.52
	45000	0.93	1.20	1.40	1.80	N/A	0.52	0.32	0.63	0.73	0.58	0.76	0.24	0.24	N/A	N/A	N/A	2.14	N/A	0.63
105	31000	N/A	N/A	0.63	0.83	N/A	0.28	0.17	0.33	0.39	0.29	0.40	N/A	0.13	N/A	0.82	0.80	1.00	N/A	0.22
	35000	N/A	N/A	0.77	1.01	N/A	0.36	0.21	0.41	0.48	0.36	0.50	N/A	0.16	N/A	0.96	0.96	1.28	N/A	0.32
	39000	N/A	N/A	0.92	1.20	N/A	0.42	0.26	0.49	0.57	0.44	0.60	N/A	0.19	N/A	1.09	1.12	1.59	N/A	0.44
	43000	N/A	N/A	1.08	1.40	N/A	0.45	0.30	0.57	0.66	0.53	0.71	N/A	0.22	N/A	1.22	1.30	1.95	N/A	0.54
	46000	N/A	N/A	1.21	1.56	N/A	0.55	0.34	0.65	0.75	0.61	0.79	N/A	0.24	N/A	N/A	N/A	2.24	N/A	0.64
115/ 130	31000	0.76	1.00	N/A	N/A	N/A	0.28	0.17	0.33	0.39	0.29	0.40	N/A	0.13	N/A	0.82	0.80	1.00	N/A	0.22
	35000	0.92	1.21	N/A	N/A	N/A	0.36	0.21	0.41	0.48	0.36	0.50	N/A	0.16	N/A	0.96	0.96	1.28	N/A	0.32
	39000	1.10	1.44	N/A	N/A	N/A	0.42	0.26	0.49	0.57	0.44	0.60	N/A	0.19	N/A	1.09	1.12	1.59	N/A	0.44
	43000	1.30	1.68	N/A	N/A	N/A	0.45	0.30	0.57	0.66	0.53	0.71	N/A	0.22	N/A	1.22	1.30	1.95	N/A	0.54
	46000	1.45	1.86	N/A	N/A	N/A	0.55	0.34	0.65	0.75	0.61	0.79	N/A	0.24	N/A	N/A	N/A	2.24	N/A	0.64

Notes:

1. Static pressure drops of accessory components must be added to external static pressure to enter fan selection tables.
2. Gas heat section maximum temperature rise of 60° F.
3. Throwaway filter option limited to 300 ft/min face velocity.
4. Bag filter option limited to 740 ft/min face velocity.
5. Horizontal roof curbs assume 0.50" static pressure drop or double the standard roof curb pressure drop, whichever is greater.
6. No additional pressure loss for model SXHL.
7. For final filters w/ prefilters (digit 13 = M, N, P, Q) also add pressure drop for throwaway filter.

Table 39. Component static pressure drops (in. W.G.)—relief damper for return fan

Nom Tons	Cfm	Relief Damper for Return Fan	Nom Tons	Cfm	Relief Damper for Return Fan
20	4000	0.08	50-55,	10000	0.28
	6000	0.19		14000	0.56
	8000	0.35		17000	0.75
	9000	0.44		20000	1.15
	10000	0.55		24000	1.66
	12000	0.79		28000	2.26
25	5000	0.13	60,	12000	0.31
	6000	0.19		16000	0.56
	7500	0.30		20000	0.88
	10000	0.55		24000	1.27
	11000	0.67		28000	1.73
	12500	0.85		30000	1.99
	14000	1.08	70-75,	12000	0.31
30	6000	0.19		16000	0.56
	9000	0.44		20000	0.88
	12000	0.79		22000	1.05
	14000	1.08		24000	1.27
	15000	1.20		26000	1.47
	17000	1.60		28000	1.73
40	8000	0.18		31000	N/A
	10000	0.28		33000	N/A
	12000	0.41			
	16000	0.73			
	17000	0.82			
	20000	1.15			
	22000	1.39			

Fan Drive Selections

Relief Fan Performance

Table 40. Modulating 100% relief fan performance — 20 to 75 tons

Nom Tons	CFM Std Air	Negative Static Pressure															
		0.25		0.50		0.75		1.00		1.25		1.50		1.75		2.00	
		RPM	BHP	RPM	BHP	RPM	BHP	RPM	BHP	RPM	BHP	RPM	BHP	RPM	BHP	RPM	BHP
20	4000	379	0.34	515	0.70	622	1.12	712	1.59	791	2.10	861	2.64				
	6000	421	0.61	541	1.03	643	1.52	732	2.07	811	2.66						
	8000	487	1.10	583	1.56	674	2.11	757	2.72								
	10000	567	1.88	643	2.37	719	2.96										
25	4000	379	0.34	515	0.70	622	1.12	712	1.59	791	2.10	861	2.64	927	3.22	988	3.84
	6000	421	0.61	541	1.03	643	1.52	732	2.07	811	2.66	882	3.28	948	3.94	1010	4.64
	8000	487	1.10	583	1.56	674	2.11	757	2.72	834	3.38	904	4.09	970	4.82		
	10000	567	1.88	643	2.37	719	2.96	794	3.63	864	4.35						
	12000	651	2.98	716	3.56	779	4.18	843	4.88								
30	4000	379	0.34	515	0.70	622	1.12	712	1.59	791	2.10	861	2.64	927	3.22	988	3.84
	6000	421	0.61	541	1.03	643	1.52	732	2.07	811	2.66	882	3.28	948	3.94	1010	4.64
	8000	487	1.10	583	1.56	674	2.11	757	2.72	834	3.38	904	4.09	970	4.82	1030	5.59
	10000	567	1.88	643	2.37	719	2.96	794	3.63	864	4.35	931	5.11	993	5.91	1053	6.77
	12000	651	2.98	716	3.56	779	4.18	843	4.88	905	5.64	967	6.47	1026	7.34		
	14000	736	4.47	796	5.17	850	5.83	904	6.57	960	7.38						
40	7500	318	0.67	444	1.21	545	1.85	629	2.54	702	3.27	767	4.02	828	4.83	884	5.66
	9000	331	0.97	444	1.47	543	2.17	628	2.94	702	3.75	770	4.60	831	5.48	887	6.37
	12000	381	2.13	460	2.40	546	3.04	627	3.89	701	4.83	769	5.82	831	6.87	889	7.93
	14000	422	3.40	486	3.49	557	3.98	631	4.76	701	5.72	768	6.78	830	7.90	888	9.07
	16000	468	5.12	520	5.07	579	5.37	643	6.01	707	6.88	769	7.92	829	9.08	887	10.32
50-55	9000	331	0.97	444	1.47	543	2.17	628	2.94	702	3.75	770	4.60	831	5.48	887	6.37
	12000	381	2.13	460	2.40	546	3.04	627	3.89	701	4.83	769	5.82	831	6.87	889	7.93
	15000	445	4.20	502	4.21	567	4.61	636	5.32	704	6.26	769	7.32	830	8.47	888	9.67
	18000	516	7.41	559	7.19	609	7.32	662	7.76	719	8.49	776	9.44	833	10.56	887	11.79
	20000	566	10.31	602	9.91	644	9.88	690	10.15	739	10.69	789	11.48	841	12.48	893	13.68

Table 40. Modulating 100% relief fan performance — 20 to 75 tons (continued)

Nom Tons	CFM Std Air	Negative Static Pressure															
		0.25		0.50		0.75		1.00		1.25		1.50		1.75		2.00	
		RPM	BHP	RPM	BHP	RPM	BHP	RPM	BHP	RPM	BHP	RPM	BHP	RPM	BHP	RPM	BHP
60, 70, 75	12000	351	1.49	423	2.09	502	3.00	572	4.02	634	5.07	690	6.09	740	7.04	784	7.91
	15000	412	2.68	460	3.15	521	3.96	585	5.02	646	6.24	702	7.53	749	8.83	801	10.14
	18000	478	4.41	516	4.88	557	5.54	607	6.49	662	7.66	715	9.01	766	10.48	814	12.01
	21000	549	6.75	578	7.36	612	7.92	647	8.71	688	9.77	735	11.03	781	12.46	827	14.03
	24000	617	9.83	644	10.59	672	11.22	702	11.88	732	12.77	766	13.89	805	15.22	846	16.72
	27000	688	15.11	711	15.09	736	15.45	761	16.18	788	17.02	815	17.92	844	18.99	876	20.31

Notes:

1. Shaded areas indicate non-standard drive selections. These drive selections must be manually factory selected.
2. Refer to General Data Table for minimum and maximum HP.

Table 41. Air-cooled modulating 100% relief fan performance — 90 to 130 tons

Nom Tons	CFM Std Air	Negative Static Pressure									
		0.25		0.50		0.75		1.00		1.25	
		RPM	BHP	RPM	BHP	RPM	BHP	RPM	BHP	RPM	BHP
90-130	28000	495	12.81	519	13.30	547	13.93	582	15.27	619	17.14
	30000	527	15.67	550	16.22	573	16.71	604	17.84	637	19.53
	32000	559	18.92	581	19.53	602	20.03	628	20.90	658	22.39
	34000	591	22.60	612	23.28	632	23.84	653	24.48	681	25.74
	36000	623	26.73	643	27.47	662	28.09	680	28.62	705	29.66
	38000	656	31.34	675	32.14	693	32.83	710	33.42	730	34.17
	40000	688	36.46	707	37.31	724	38.07	741	38.73	757	39.29
Nom Tons	**CFM Std Air**	**Negative Static Pressure**									
		1.50		**1.75**		**2.00**		**2.25**		**2.50**	
		RPM	**BHP**	**RPM**	**BHP**	**RPM**	**BHP**	**RPM**	**BHP**	**RPM**	**BHP**
90-130	28000	655	18.85	689	20.51	721	22.51	750	24.43	777	26.28
	30000	672	21.63	705	23.38	737	25.16	768	27.31	795	29.37
	32000	690	24.39	723	26.63	753	28.44	784	30.37	811	32.54
	34000	710	27.55	739	29.75	771	32.16	799	34.04	828	36.04
	36000	732	31.25	759	33.29	788	35.76	817	38.26	844	40.23
	38000	755	35.51	780	37.38	806	39.60	834	42.26	861	44.90
	40000	779	40.45	804	42.09	827	44.14	853	46.63	879	49.41

Notes:

1. Shaded areas indicate non-standard drive selections. These drive selections must be manually factory selected.
2. Refer to General Data Table for minimum and maximum HP.

Table 42. 100% Relief fan drive selections — 20 to 75 tons

	3 Hp		5 Hp		7.5 Hp		10 Hp		15 Hp		20 Hp	
	RPM	Drive No.	RPM	Drive No.	RPM	Drive No.	RPM	Drive No.	RPM	Drive No.	RPM	Drive No.
20	500	5										
	600	6										
	700	7										
	800	8										
	900	9										
25	500	5	700	7								
	600	6	800	8								
	700	7	900	9								
	800	8	1000	A								
	900	9										
30	500	5	700	7	800	8						
	600	6	800	8	900	9						
	700	7	900	9	1000	A						
	800	8	1000	A	1100	B						
	900	9										
40			400	4	600	6	700	7				
			500	5	700	7	800	8				
			600	6	800	8						
			700	7								
			800	8								
50–55			400	4	600	6	700	7	700	7		
			500	5	700	7	800	8	800	8		
			600	6	800	8			900	9		
			700	7								
			800	8								
60			400	4	600	6	600	6	700	7	800	8

Table 42. 100% Relief fan drive selections — 20 to 75 tons (continued)

	3 Hp		5 Hp		7.5 Hp		10 Hp		15 Hp		20 Hp	
	RPM	Drive No.	RPM	Drive No.	RPM	Drive No.	RPM	Drive No.	RPM	Drive No.	RPM	Drive No.
70			500	5	700	7	700	7	800	8		
75			600	6								

Table 43. 100% Relief fan drive selections — 90 to 130 tons

Nom Tons	15 HP		20 HP		25 HP		30 HP		40 HP	
	RPM	Drive No.	RPM	Drive No.	RPM	Drive No.	RPM	Drive No.	RPM	Drive No.
90-130	500	5	500.00	5	600.00	6	600.00	6	700.00	7
	600	6	600.00	6	700.00	7	700.00	7	800.00	8
			700	7	800	8	800	8		

Table 44. 50% Relief fan performance — 90 to 130 tons

Nom Tons	CFM Std Air	Negative Static Pressure									
		0.25		0.50		0.75		1.00		1.25	
		RPM	BHP	RPM	BHP	RPM	BHP	RPM	BHP	RPM	BHP
90-130	12000	432	4.09	461	4.31	502	4.86	545	5.67	585	6.35
	14000	495	6.40	519	6.65	547	6.96	582	7.64	619	8.57
	16000	559	9.46	581	9.77	602	10.02	628	10.45	658	11.20
	18000	623	13.36	643	13.73	662	14.05	680	14.31	705	14.83
	20000	688	18.23	707	18.66	724	19.03	741	19.36	757	19.65
Nom Tons	**CFM Std Air**	**Negative Static Pressure**									
		1.50		**1.75**		**2.00**		**2.25**		**2.50**	
		RPM	**BHP**	**RPM**	**BHP**	**RPM**	**BHP**	**RPM**	**BHP**	**RPM**	**BHP**
90-130	12000	622	7.19	655	7.99	686	8.78	717	9.57	748	10.48
	14000	655	9.42	689	10.26	721	11.26	750	12.21	777	13.14
	16000	690	12.19	723	13.32	753	14.22	784	15.18	811	16.27
	18000	732	15.63	759	16.65	788	17.88	817	19.13	844	20.12
	20000	779	20.22	804	21.04	827	22.07	853	23.31	879	24.70

Notes:

1. Shaded areas indicate non-standard drive selections. These drive selections must be manually factory selected.
2. Refer to General Data Table for minimum and maximum HP.

Table 45. 50% Relief fan drive selections, 90 to 130 tons

Nom Tons	15 Hp	
	RPM	Drive No.
90-130	500	5
	600	6
	700	7
	800	8
	900	9

Return Fan Performance

Table 46. Return fan performance—20, 25, 30 ton air-cooled and (24.5" Fan)

CFM Std Air	Return Fan Static Pressure Including Relief Damper P.D.															
	0.25		0.50		0.75		1.00		1.25		1.50		1.75		2.00	
	RPM	BHP	RPM	BHP	RPM	BHP	RPM	BHP	RPM	BHP	RPM	BHP	RPM	BHP	RPM	BHP
4000	557	0.29	638	0.48	710	0.68	776	0.89	838	1.10	899	1.32	969	1.60	1038	1.89
4500	605	0.36	682	0.57	749	0.79	811	1.02	869	1.25	926	1.49	980	1.73	1033	1.99
5000	654	0.44	727	0.67	790	0.91	850	1.16	905	1.41	957	1.67	1007	1.93	1057	2.20
5500	704	0.53	773	0.79	834	1.04	889	1.30	943	1.58	992	1.86	1040	2.15	1087	2.44
6000	756	0.64	821	0.92	879	1.20	932	1.47	982	1.77	1030	2.06	1076	2.38	1121	2.70
6500	808	0.76	868	1.06	925	1.36	976	1.66	1024	1.97	1070	2.29	1114	2.61	1157	2.95
7000	861	0.90	917	1.21	972	1.55	1021	1.87	1067	2.19	1112	2.53	1154	2.87	1195	3.22
7500	913	1.06	968	1.39	1019	1.74	1068	2.10	1112	2.44	1155	2.79	1196	3.15	1235	3.51
8000	967	1.24	1019	1.58	1068	1.96	1115	2.34	1158	2.71	1199	3.08	1238	3.45	1277	3.84
8500	1021	1.44	1071	1.80	1116	2.19	1162	2.60	1204	3.00	1244	3.39	1283	3.79	1320	4.19
9000	1075	1.67	1123	2.04	1166	2.45	1210	2.88	1252	3.30	1290	3.72	1327	4.14	1363	4.56
9500	1130	1.92	1175	2.31	1217	2.73	1258	3.17	1299	3.62	1337	4.07	1373	4.52	1408	4.96
10000	1186	2.20	1228	2.60	1269	3.04	1307	3.50	1347	3.97	1384	4.45	1419	4.91	1454	5.38
10500	1241	2.50	1280	2.92	1321	3.37	1357	3.85	1395	4.34	1432	4.85	1466	5.33	1500	5.84
11000	1297	2.84	1334	3.27	1373	3.74	1409	4.23	1443	4.74	1480	5.26	1515	5.79	1546	6.29
11500	1353	3.20	1387	3.64	1425	4.13	1460	4.64	1493	5.16	1528	5.71	1561	6.25	1594	6.79
12000	1408	3.60	1441	4.06	1477	4.56	1512	5.08	1544	5.62	1576	6.18	1610	6.75	1642	7.32
12500	1464	4.03	1496	4.50	1530	5.01	1565	5.56	1596	6.11	1626	6.68	1658	7.28	1689	7.87
13000	1520	4.49	1551	4.98	1583	5.51	1617	6.06	1648	6.64	1677	7.22	1707	7.84	1737	8.44
13500	1576	4.99	1606	5.50	1636	6.03	1669	6.60	1700	7.20	1728	7.80	1756	8.42	1785	9.06
14000	1633	5.52	1661	6.05	1690	6.60	1721	7.19	1752	7.79	1780	8.42	1807	9.05	1834	9.70

Notes:

1. Max fan RPM 1715 for 24.5" Class I Fan
2. Max motors available are as follows: 20T: 3HP, 25; 5HP, 30T: 7.5 HP
3. Max CFM available is as follows; 20T: 9000, 25T: 11000, and 30T: 13500
4. Min CFM is 4000 for 20T, 25T, and 30T
5. Return fan belt drive RPM selections will be available to cover 500-1600 RPM range +/- 50 RPM
6. Performance data includes cabinet and rain hood effect. Damper pressure drop must be added to the return duct static. See table Component static pressure drops - relief damper for return fan in Performance Data.
7. Shaded area indicates nonstandard BHP or RPM selections. Contact a local Trane® representative for more information.

Table 47. Return fan performance—40, 50 and 55 ton air-cooled and (27" Fan)

CFM Std Air	Return Fan Static Pressure Including Relief Damper P.D.															
	0.25		0.50		0.75		1.00		1.25		1.50		1.75		2.00	
	RPM	BHP	RPM	BHP	RPM	BHP	RPM	BHP	RPM	BHP	RPM	BHP	RPM	BHP	RPM	BHP
7500	709	0.82	766	1.16	815	1.50	861	1.85	906	2.22	949	2.60	991	2.99	1033	3.39
8000	748	0.95	803	1.31	851	1.67	895	2.04	938	2.43	979	2.82	1018	3.22	1058	3.64
8500	788	1.09	840	1.47	887	1.86	930	2.24	971	2.64	1010	3.05	1049	3.48	1087	3.92
9000	827	1.24	878	1.64	924	2.05	965	2.46	1005	2.88	1043	3.31	1080	3.75	1115	4.19
9500	867	1.41	916	1.83	961	2.27	1001	2.70	1040	3.14	1076	3.58	1112	4.03	1146	4.50
10000	908	1.60	955	2.04	999	2.50	1038	2.95	1075	3.41	1111	3.88	1145	4.34	1179	4.83
10500	948	1.81	994	2.27	1036	2.75	1075	3.23	1111	3.70	1145	4.18	1179	4.68	1212	5.18
11000	989	2.04	1033	2.51	1074	3.01	1112	3.51	1147	4.01	1181	4.51	1213	5.02	1245	5.53
11500	1030	2.28	1072	2.78	1112	3.29	1149	3.82	1184	4.33	1216	4.86	1248	5.38	1279	5.92
12000	1071	2.55	1112	3.06	1151	3.59	1187	4.14	1221	4.69	1253	5.24	1284	5.78	1314	6.33
12500	1112	2.83	1152	3.37	1189	3.92	1225	4.48	1258	5.06	1290	5.62	1320	6.19	1349	6.76
13000	1153	3.14	1192	3.70	1228	4.27	1263	4.86	1296	5.45	1327	6.04	1356	6.63	1385	7.23
13500	1194	3.47	1232	4.05	1267	4.63	1301	5.24	1333	5.85	1364	6.47	1393	7.08	1421	7.70
14000	1236	3.83	1272	4.42	1307	5.03	1340	5.66	1371	6.29	1401	6.94	1430	7.57	1457	8.20
14500	1277	4.21	1313	4.82	1346	5.45	1379	6.10	1410	6.75	1439	7.42	1467	8.08	1494	8.73
15000	1319	4.62	1353	5.25	1386	5.90	1417	6.55	1448	7.23	1477	7.92	1504	8.61	1531	9.29
15500	1361	5.05	1394	5.71	1426	6.37	1457	7.05	1486	7.74	1514	8.44	1542	9.16	1569	9.87
16000	1402	5.51	1435	6.18	1466	6.87	1496	7.57	1525	8.28	1553	9.01	1580	9.74	1606	10.47
16500	1444	6.00	1476	6.69	1506	7.40	1535	8.12	1564	8.85	1591	9.58	1617	10.34	1643	11.10
17000	1486	6.52	1517	7.23	1547	7.96	1575	8.70	1603	9.44	1629	10.20	1655	10.97	1681	11.75
17500	1528	7.07	1558	7.80	1587	8.55	1615	9.30	1642	10.07	1668	10.85	1694	11.64	1718	12.43
18000	1570	7.65	1599	8.40	1627	9.17	1655	9.94	1681	10.73	1707	11.53	1732	12.33	1757	13.15
18500	1612	8.26	1640	9.03	1668	9.81	1695	10.62	1721	11.43	1746	12.23	1771	13.07	1794	13.89
19000	1654	8.91	1682	9.70	1709	10.50	1735	11.31	1760	12.14	1785	12.97	1809	13.82	1833	14.67
19500	1696	9.59	1723	10.40	1749	11.22	1775	12.06	1800	12.90	1825	13.76	1848	14.62	1872	15.50

Table 47. Return fan performance—40, 50 and 55 ton air-cooled and (27" Fan) (continued)

CFM Std Air	Return Fan Static Pressure Including Relief Damper P.D.															
	0.25		0.50		0.75		1.00		1.25		1.50		1.75		2.00	
	RPM	BHP	RPM	BHP	RPM	BHP	RPM	BHP	RPM	BHP	RPM	BHP	RPM	BHP	RPM	BHP
20000	1738	10.30	1765	11.13	1790	11.97	1816	12.83	1840	13.69	1864	14.56	1888	15.46	1910	16.34
20500	1780	11.05	1806	11.90	1831	12.76	1856	13.63	1880	14.52	1903	15.41	1926	16.31	1949	17.22
21000	1822	11.84	1848	12.71	1872	13.59	1897	14.48	1920	15.39	1943	16.29	1966	17.23	1988	18.14
21500	1864	12.66	1889	13.55	1914	14.45	1937	15.36	1960	16.29	1983	17.22	2005	18.16	2027	19.11
22000	1899	13.05	1926	14.11	1952	15.16	1977	16.20	2001	17.23	2024	18.24	2047	19.27	2069	20.28
22500	1941	13.91	1967	14.98	1992	16.05	2017	17.12	2041	18.19	2064	19.23	2086	20.27	2108	21.31

Notes:

1. Max fan RPM 1981 For 27" Class II Fan
2. Max Motor Available 15 HP For 27" Fan Size
3. Max motors Available are as follows: 40T: 10 HP & 50-55T: 15 HP
4. Max CFM is as follows: 40T: 18000, 50-55T: 22500
5. Min CFM is as follows: 40T: 7500, 50-55T: 9000
6. Return fan belt drive RPM selections will be available to cover 700-1900 RPM range +/- 50 RPM
7. Performance data includes cabinet and rain hood effect. Damper pressure drop must be added to the return duct static. See table Component static pressure drops - relief damper for return fan in Performance Data.
8. Shaded area indicates nonstandard BHP or RPM selections. Contact a local Trane® representative for more information.

Table 48. Return fan performance—60 to 75 tons air-cooled and (36.5" fan)

CFM Std Air	Return Fan Static Pressure Including Relief Damper P.D.															
	0.25		0.50		0.75		1.00		1.25		1.50		1.75		2.00	
	RPM	BHP	RPM	BHP	RPM	BHP	RPM	BHP	RPM	BHP	RPM	BHP	RPM	BHP	RPM	BHP
12000	459	1.07	502	1.59	541	2.13	578	2.71	613	3.31	647	3.91	681	4.54	713	5.20
13000	490	1.27	530	1.83	567	2.40	603	3.01	636	3.65	668	4.29	700	4.94	731	5.64
14000	520	1.49	560	2.09	595	2.70	628	3.34	660	3.99	691	4.69	721	5.38	751	6.10
15000	552	1.73	590	2.38	623	3.03	655	3.70	686	4.39	715	5.11	744	5.85	771	6.59
16000	583	2.00	619	2.70	652	3.39	682	4.09	712	4.82	740	5.57	767	6.34	794	7.14
17000	615	2.30	650	3.05	681	3.78	710	4.52	739	5.28	766	6.06	792	6.85	818	7.67
18000	646	2.64	680	3.43	711	4.20	739	4.98	766	5.78	792	6.60	817	7.41	842	8.27
19000	678	3.01	711	3.85	741	4.67	768	5.48	794	6.31	819	7.16	844	8.03	867	8.89
20000	711	3.42	742	4.30	771	5.17	797	6.02	823	6.90	847	7.77	871	8.66	894	9.59
21000	743	3.87	773	4.78	801	5.70	827	6.60	852	7.51	875	8.41	898	9.36	920	10.30
22000	775	4.36	805	5.31	832	6.28	857	7.22	881	8.17	904	9.11	926	10.09	947	11.06
23000	808	4.89	836	5.88	863	6.90	887	7.89	911	8.88	933	9.87	954	10.86	975	11.88
24000	840	5.46	868	6.49	894	7.56	918	8.60	941	9.63	962	10.67	983	11.71	1004	12.75
25000	873	6.08	900	7.15	925	8.26	948	9.35	970	10.42	992	11.49	1012	12.59	1032	13.67
26000	906	6.75	931	7.86	956	9.00	979	10.16	1001	11.28	1021	12.37	1041	13.49	1061	14.63
27000	939	7.47	963	8.62	987	9.79	1010	11.01	1031	12.18	1052	13.33	1071	14.47	1090	15.65

Notes:

1. Max fan RPM 1151 for 36.5" Class I Fan
2. Max motor available 20 HP for 36.5" fan size
3. Max motor available 20 HP for 60, 70, and 75T
4. Max CFM is 27000 for 60, 70, and 75T
5. Min CFM is 12000 for 60, 70, and 75T
6. Return fan belt drive RPM selections will be available to cover 500-1100 RPM range +/- 50 RPM
7. Performance data includes cabinet and rain hood effect. Damper pressure drop must be added to the return duct static. See table Component static pressure drops - relief damper for return fan in Performance Data.

Table 49. 100% Return fan drive selections — 20 to 75 tons air-cooled and

	3 Hp		5 Hp		7.5 Hp		10 Hp		15 Hp		20 Hp	
	RPM	Drive No.	RPM	Drive No.	RPM	Drive No.	RPM	Drive No.	RPM	Drive No.	RPM	Drive No.
20	500 600 700 800 900 1000 1100 1200 1300	5 6 7 8 9 A B C D										
25	500 600 700 800 900 1000 1100 1200 1300	5 6 7 8 9 A B C D	1100 1200 1300 1400 1500 1600	B C D E F G								
30	500 600 700 800 900 1000 1100 1200 1300	5 6 7 8 9 A B C D	1100 1200 1300 1400 1500 1600	B C D E F G	1400 1500 1600	E F G						
40			700 800 900 1000 1100 1200 1300	7 8 9 A B C D	1200 1300 1400 1500	C D E F	1400 1500 1600 1700	E F G H				
50–55			700 800 900 1000 1100 1200 1300	7 8 9 A B C D	1200 1300 1400 1500	C D E F	1400 1500 1600 1700	E F G H	1600 1700 1800 1900	G H J K		
60			500 600 700 800	5 6 7 8	700 800 900	7 8 9	800 900 1000	8 9 A	900 1000 1100	9 A B	1100	B
70, 75			500 600 700 800	5 6 7 8	700 800 900	7 8 9	800 900 1000	8 9 A	900 1000 1100	9 A B	1100	B

Pressure Curves

Note: *To check operating pressure, see instructions* *"Check Operating Pressures," p. 108*.

Figure 65. 20 ton eFlex variable speed operating pressure curve (compressor at 100% and condenser fans ON)

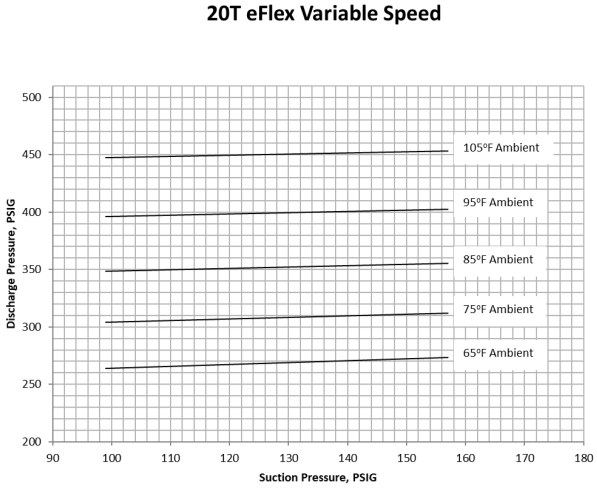

Figure 66. 25 ton standard efficiency operating pressure curve (all compressors and condenser fans ON)

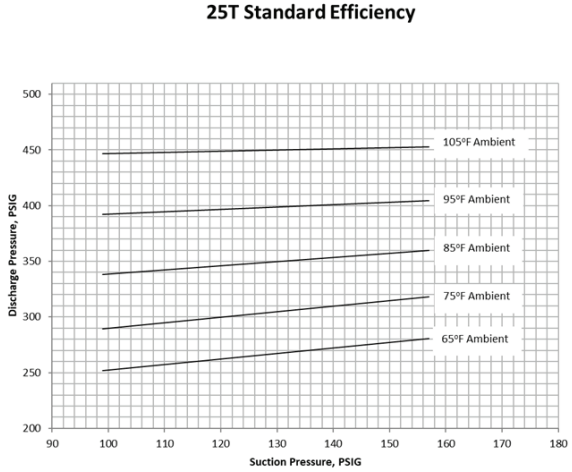

Figure 67. 25 ton high efficiency operating pressure curve (all compressors and condenser fans ON)

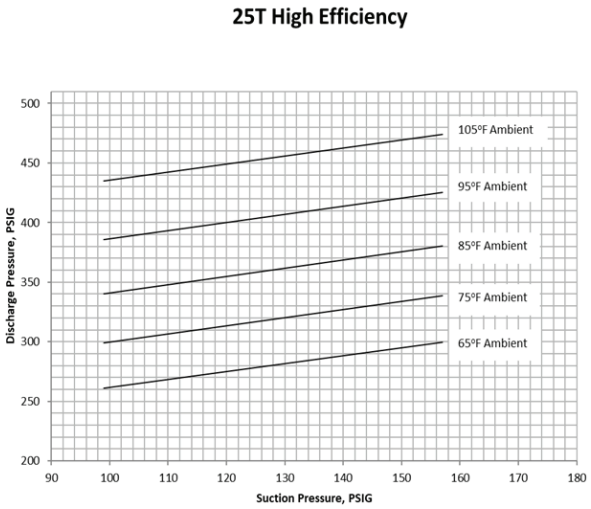

Figure 68. 25 ton eFlex variable speed operating pressure curve (compressor at 100% and condenser all fans ON)

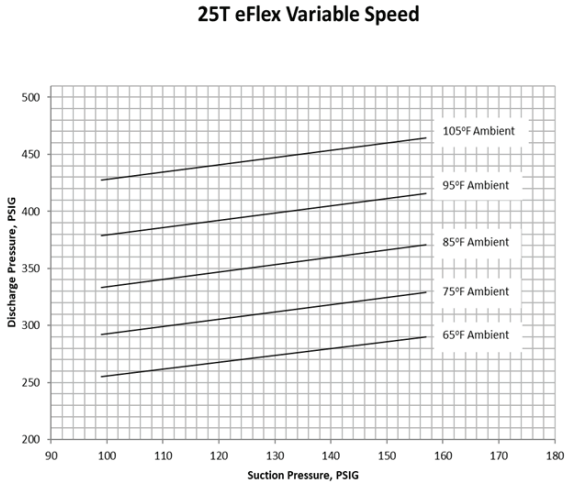

Figure 69. 30 ton standard efficiency operating pressure curve (all compressors and condenser fans ON)

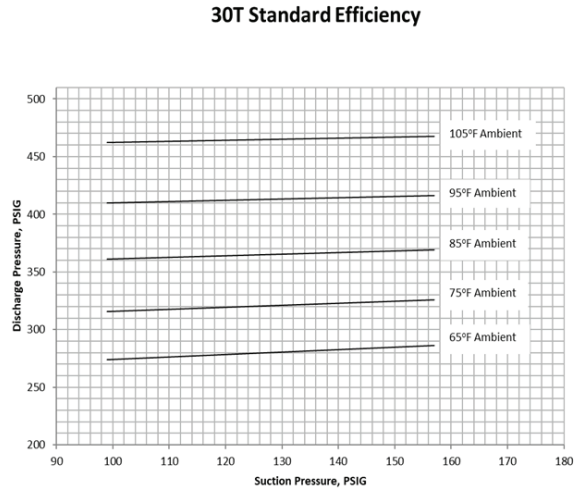

Figure 70. 30 ton high efficiency operating pressure curve (all compressors and condenser fans ON)

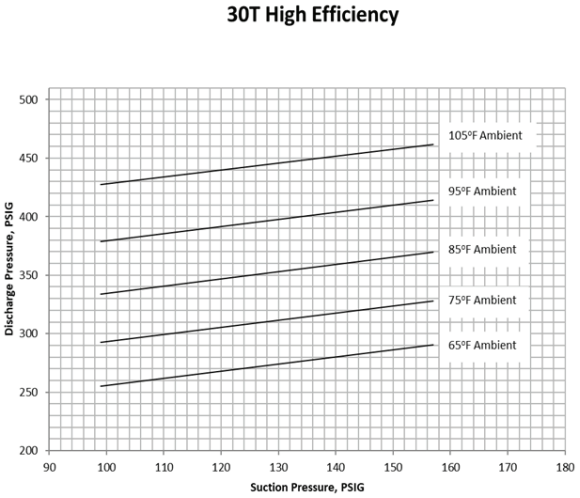

Figure 71. 30 ton eFlex variable speed operating pressure curve (compressor at 100% and condenser all fans ON)

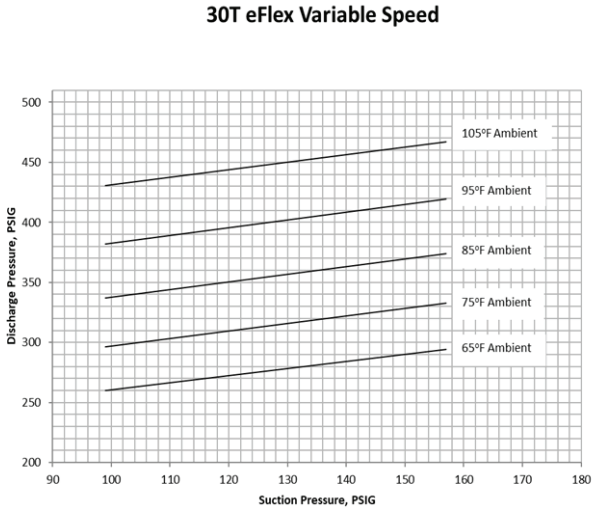

Figure 72. 40 ton standard efficiency operating pressure curve (all compressors and condenser fans ON)

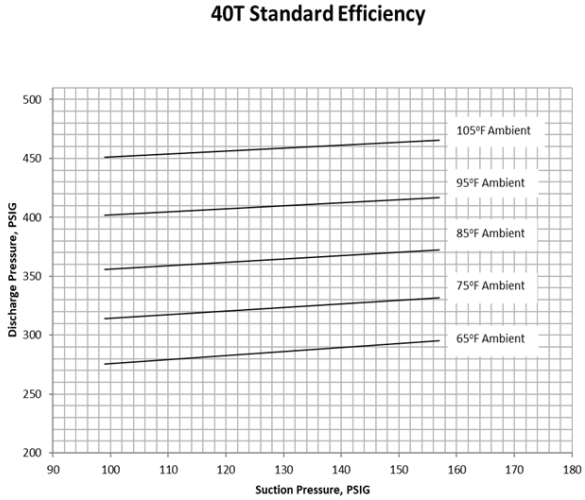

Figure 73. 40 ton high efficiency operating pressure curve (all compressors and condenser fans ON)

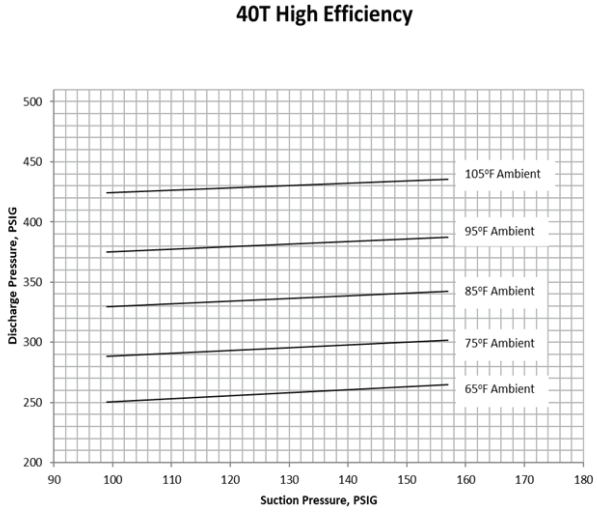

Figure 74. 40 ton eFlex variable speed—circuit 1 only operating pressure curve (compressor at 100% and all condenser fans ON).

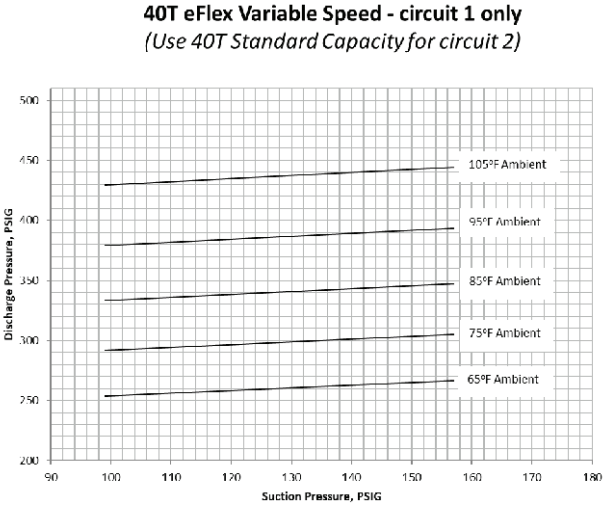

Figure 75. 50 ton standard efficiency operating pressure curve (all compressors and condenser fans ON)

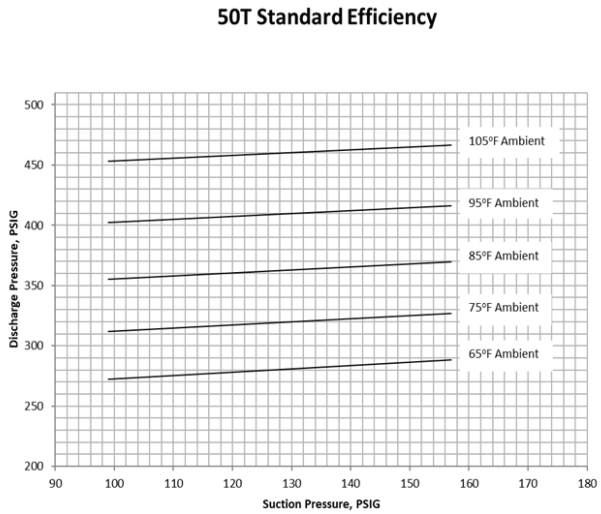

Figure 76. 50 ton high efficiency operating pressure curve (all compressors and condenser fans ON)

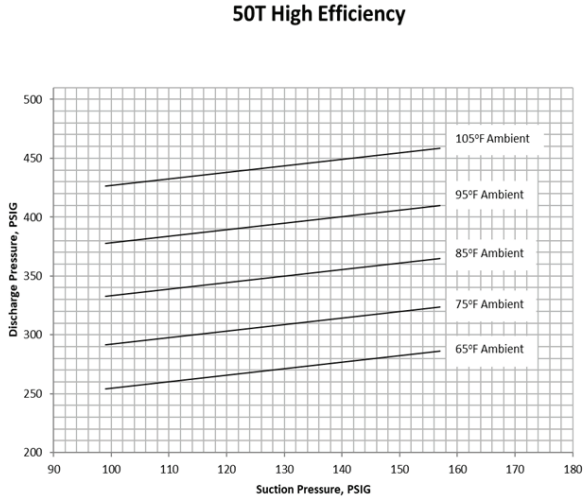

Figure 77. 50 ton high efficiency operating pressure curve (all compressors and condenser fans ON)

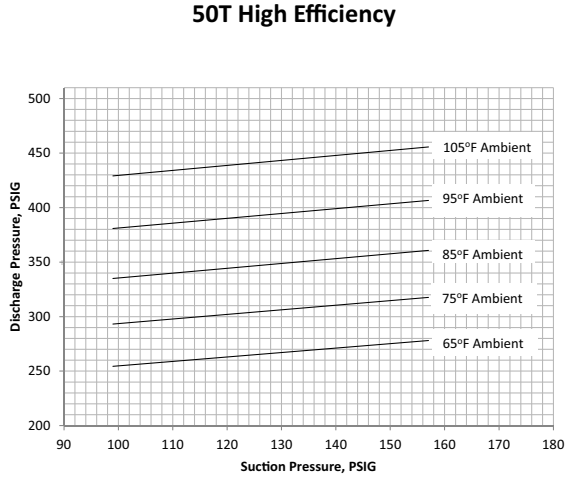

Figure 78. 50 ton eFlex variable speed—circuit 1 only operating pressure curve (compressor at 100% and all condenser fans ON).

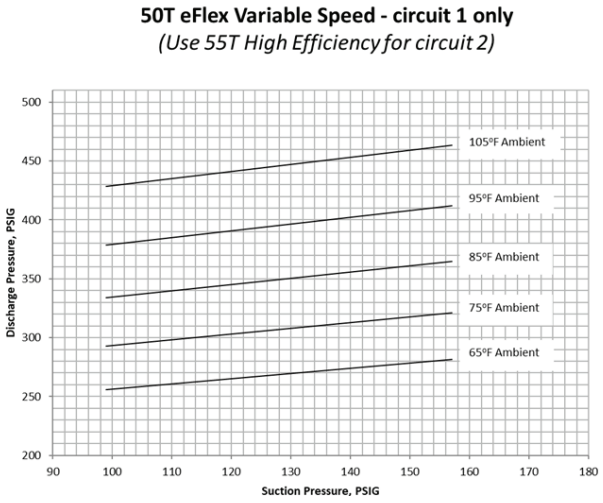

Figure 79. 55 ton standard efficiency operating pressure curve (all compressors and condenser fans ON)

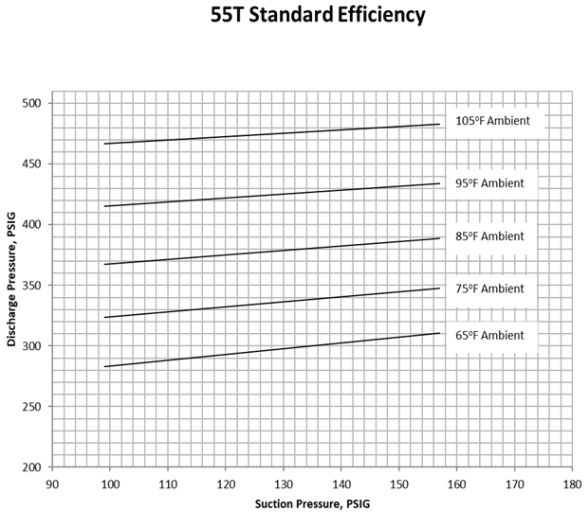

Figure 80. 55 ton high efficiency operating pressure curve (all compressors and condenser fans ON)

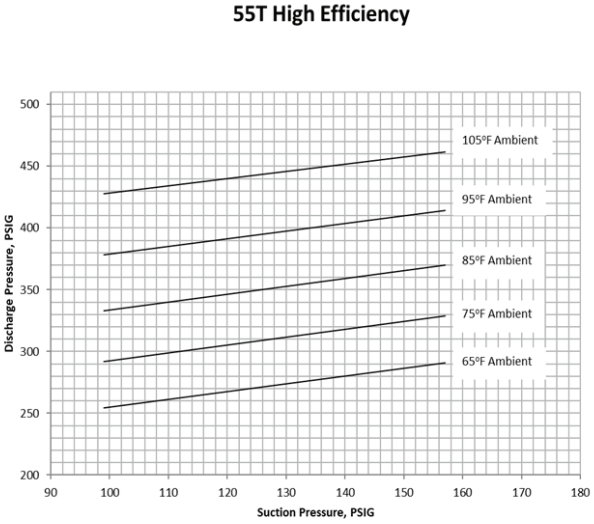

Figure 81. 55 ton eFlex variable speed—circuit 1 operating pressure curve (all compressors and condenser fans ON)

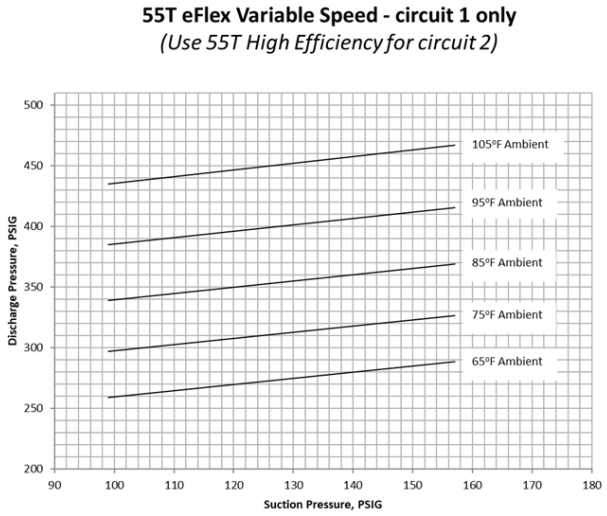

Figure 82. 60 ton standard efficiency operating pressure curve (all compressors and condenser fans ON)

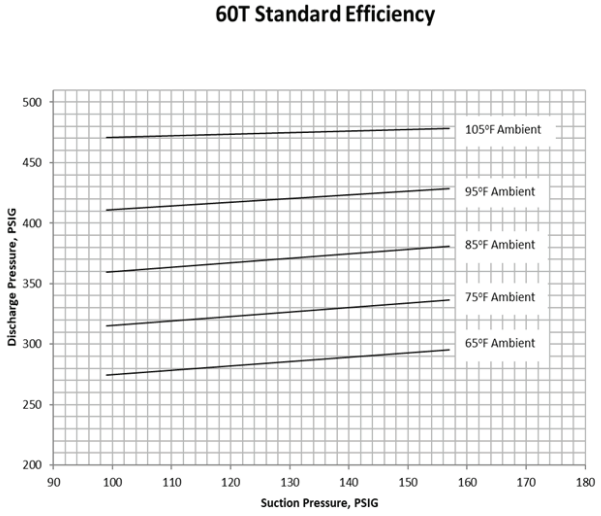

Figure 83. 60 ton high efficiency operating pressure curve (all compressors and condenser fans ON)

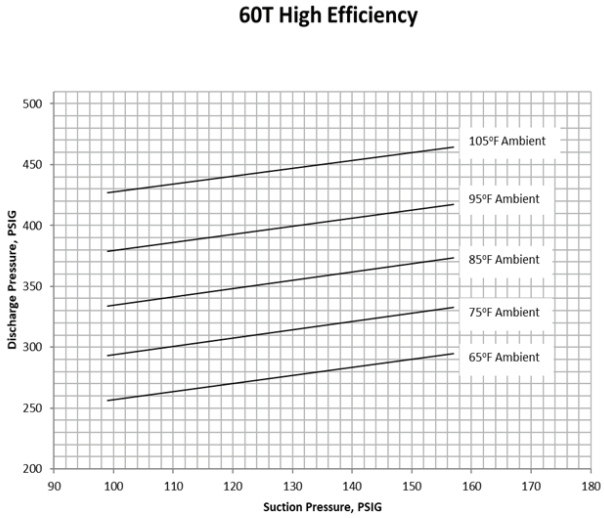

Figure 84. 60 ton eFlex variable speed—circuit 1 only operating pressure curve (compressor at 100% and all condenser fans ON).

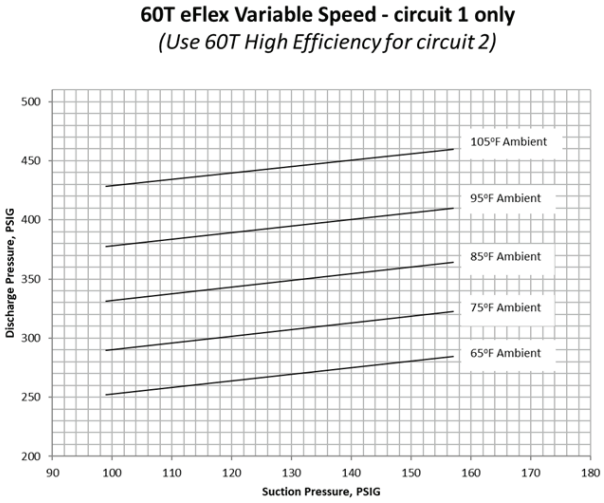

Figure 85. 70 ton standard efficiency operating pressure curve (all compressors and condenser fans ON)

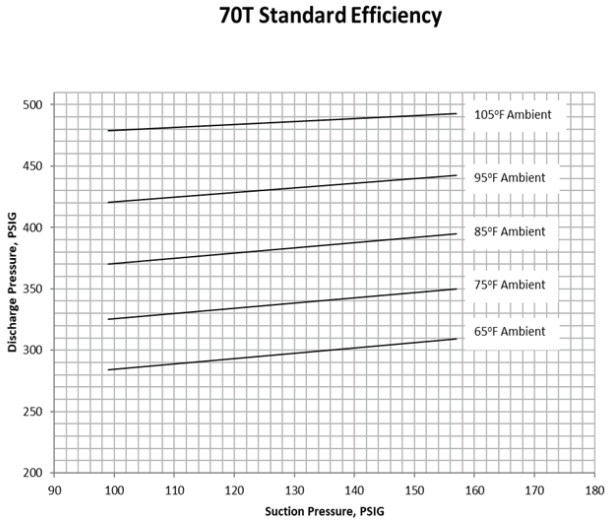

Figure 86. 70 ton high efficiency operating pressure curve (all compressors and condenser fans ON)

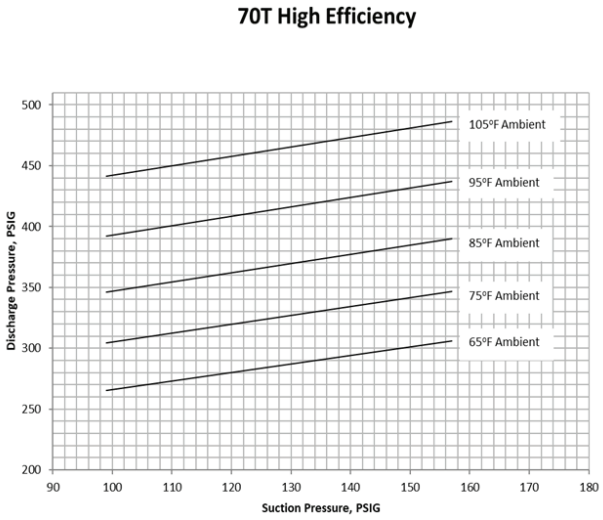

Figure 87. 70 ton eFlex variable speed—circuit 1 only operating, high efficiency pressure curve (compressor at 100% and all condenser fans ON).

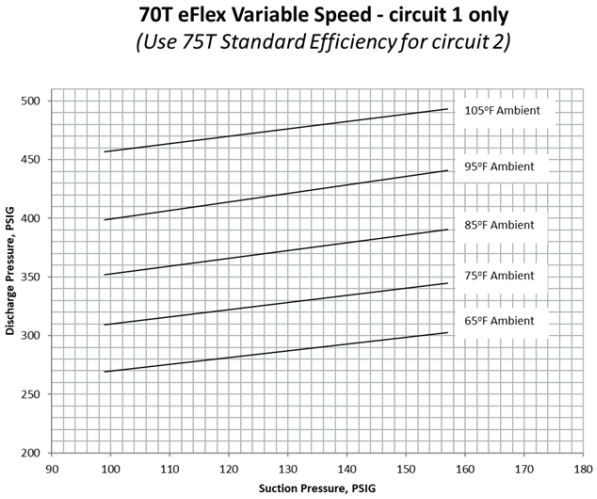

Figure 88. 75 ton standard efficiency operating pressure curve (all compressors and condenser fans ON)

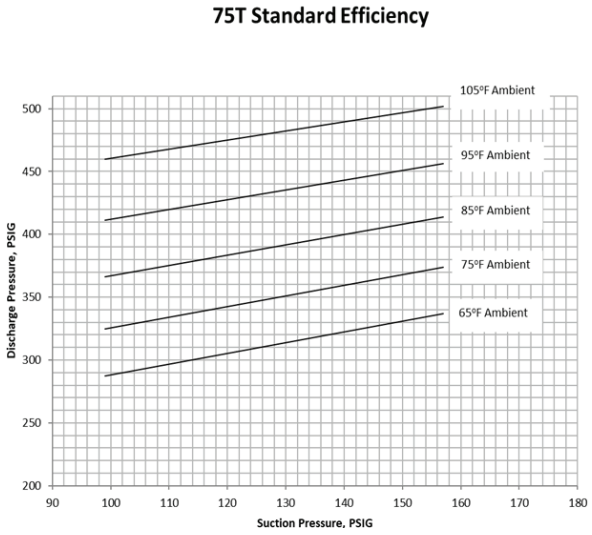

Figure 89. 75 ton high efficiency operating pressure curve (all compressors and condenser fans ON)

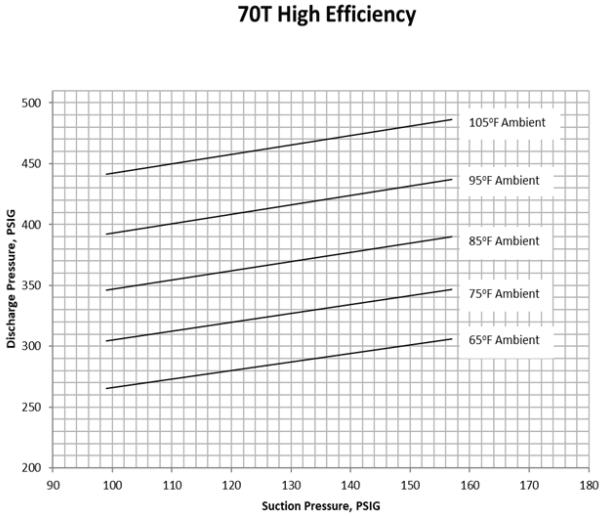

Figure 90. 75 ton eFlex variable speed—circuit 1 and circuit 2 operating pressure curve (compressor at 100% and all condenser fans ON)

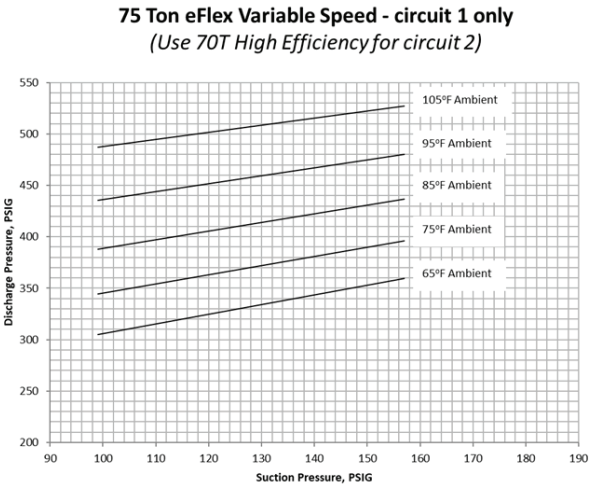

Figure 91. 90 ton standard operating pressure curve (all compressors and condenser fans ON)

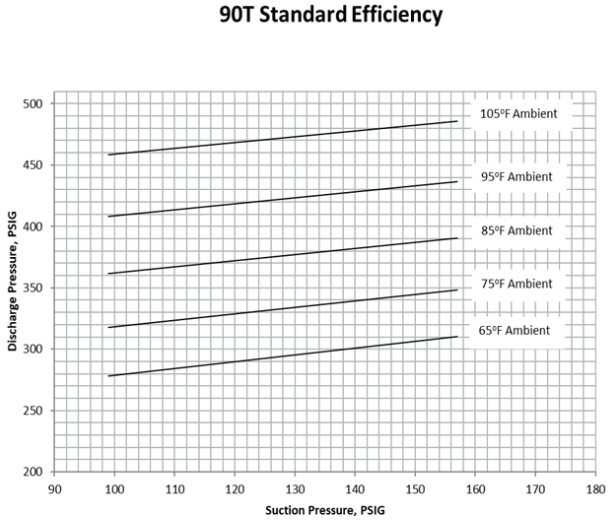

Figure 92. 90 ton high efficiency operating pressure curve (all compressors and condenser fans ON)

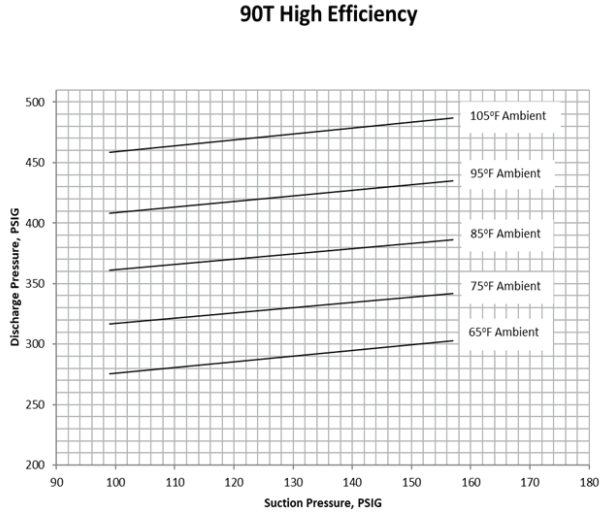

Figure 93. 105 ton standard efficiency operating pressure curve (all compressors and condenser fans ON)

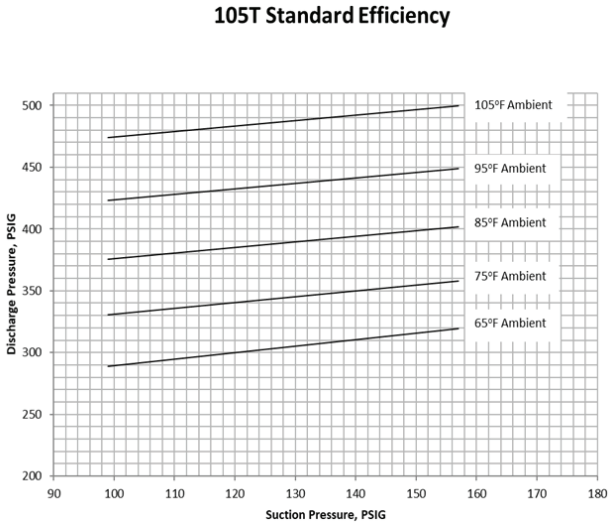

Figure 94. 115 ton standard efficiency operating pressure curve (all compressors and condenser fans ON)

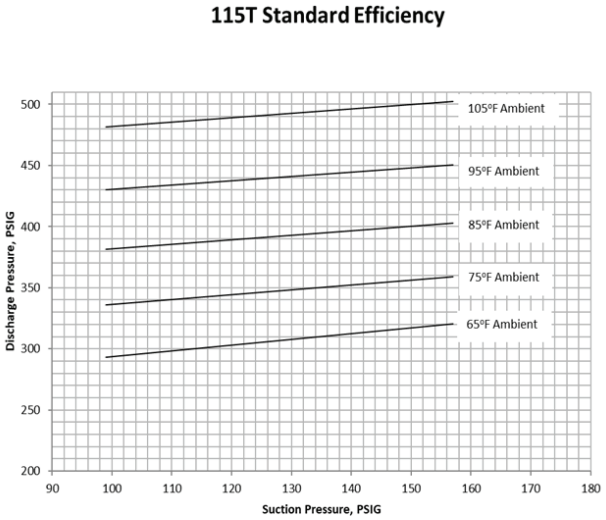

Figure 95. 130 ton standard efficiency operating pressure curve (all compressors and condenser fans ON)

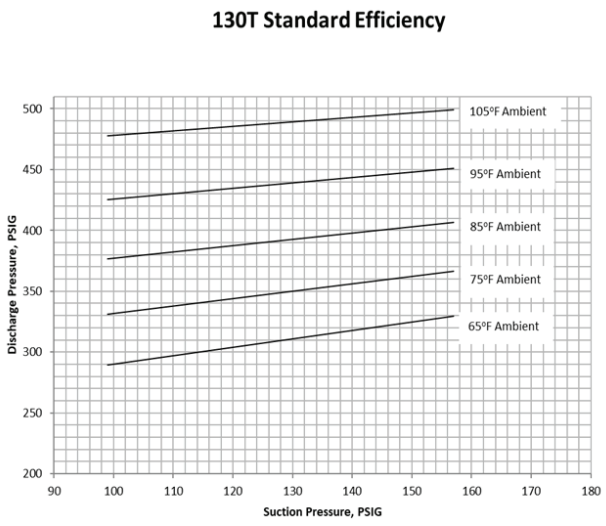

Check Operating Pressures

1. Start the unit and allow the pressures to stabilize.

   Note: *If unit includes Modulating Dehumidification Control option, pressure curves apply to the cooling mode only.*

2. Measure the outdoor air dry bulb temperature (°F) entering the condenser coil.
3. Measure the discharge and suction pressure (psig) next to the compressor.
4. Plot the outdoor dry bulb temperature and the operating suction pressure (psig) onto the chart.
5. At the point of intersection, read to the left for the discharge pressure. The measured discharge pressure should be within ± 7 psig of the graph.

Economizer and Relief Air Damper Adjustment

Exhaust Air Dampers

Verify that the exhaust dampers (if equipped) close tightly when the unit is off. Adjust the damper linkage as necessary to ensure proper closure. An access panel is provided under each damper assembly.

Outside Air and Return Air Damper Operation

The outside air and return air damper linkage is accessible from the filter section of the unit. The damper linkage connecting the outside air dampers to the return air dampers is preset from the factory in the number 1 position. Refer to Table 50, p. 111 for the appropriate linkage position for the unit and operating airflow (CFM).

⚠ WARNING

No Step Surface!

Failure to follow instruction below could result in death or serious injury.

Do not walk on the sheet metal drain pan. Walking on the drain pan could cause the supporting metal to collapse and result in the operator/technician falling.

Note: *Bridging between the unit main supports may consist of multiple 2 x 12 boards or sheet metal grating.*

Arbitrarily adjusting the outside air dampers to open fully when the return air dampers are closed or; failing to maintain the return air pressure drop with the outside air dampers when the return air dampers are closed, can overload the supply fan motor and cause building pressurization control problems due to improper CFM being delivered to the space.

The outside air/return air damper linkage is connected to a crank arm with a series of holes that allows the installer or operator to modify the amount of outside air damper travel in order to match the return static pressure.

Refer to Table 50, p. 111 for the equivalent return air duct losses that correspond to each of the holes illustrated in Figure 96, p. 110.

To Adjust the Outside Air Damper Travel

1. Drill a 1/4" hole through the unit casing up stream of the return air dampers. Use a location that will produce an accurate reading with the least amount of turbulence – several locations may be necessary, then average the reading.

⚠ WARNING

Hazardous Voltage!

Failure to disconnect power before servicing could result in death or serious injury.

Disconnect all electric power, including remote disconnects before servicing. Follow proper lockout/tagout procedures to ensure the power can not be inadvertently energized. Verify that no power is present with a voltmeter.

Important: *HIGH VOLTAGE IS PRESENT AT TERMINAL BLOCK OR UNIT DISCONNECT SWITCH.*

2. Close the disconnect switch or circuit protector switch that provides the supply power to the unit terminal block (2XD1 on 20-75T units / 1XD1 on 90-130T units) or the unit mounted disconnect switch (2QB1 on 20-75T units / 1QB1 on 90-130T units).
3. Turn the 115 volt control circuit switch (1S1) to the "On" position.

   Turn the 115 volt control circuit switch (1S20) to the "On" position. (90-130T units only)
4. Open the access door located in the unit control panel, and press the Manual Override key to display the first service screen. Refer to the latest edition of the applicable programming manual for applications for the SERVICE TEST screens and programming instructions.
5. Use tables in "," to program the following system components for operation by scrolling through the displays;
   - Supply Fan (On)
   - Variable Frequency Drive (100% Output, if applicable)
   - RTM Occ/Unocc Output (Unoccupied)
   - Outside Air Dampers (Closed)
6. Once the configuration for the components is complete, press the NEXT key until the LCD displays the "Start test in __Sec." screen. Press the + key to designate the delay before the test is to start. This service test will begin after the TEST START key is pressed and the delay designated in this step has elapsed. Press the ENTER key to confirm this choice.
7. Press the TEST START key to start the test. Remember that the delay designated in step 6 must elapse before the fan will begin to operate.
8. With the outside air dampers fully closed and the supply fan operating at 100% airflow requirements, measure the return static pressure at the location determined in step 1.
9. Press the STOP key in the unit control panel to stop the fan operation.

⚠ WARNING

Live Electrical Components!

Failure to follow all electrical safety precautions when exposed to live electrical components could result in death or serious injury.

When it is necessary to work with live electrical components, have a qualified licensed electrician or other individual who has been properly trained in handling live electrical components perform these tasks.

⚠ WARNING

Rotating Components!

Failure to disconnect power before servicing could result in rotating components cutting and slashing technician which could result in death or serious injury.

Disconnect all electric power, including remote disconnects before servicing. Follow proper lockout/tagout procedures to ensure the power can not be inadvertently energized.

10. Open the field supplied main power disconnect switch upstream of the rooftop unit. Lock the disconnect switch in the "Open" position while working on the dampers.

Note: *Gravity will cause the damper to close. Support or secure the damper blades while removing the actuator to prevent unexpected damper rotation.*

11. Compare the static pressure reading to the static pressure ranges and linkage positions in Table 50, p. 111 for the unit size and operating CFM.

    Relocate the outside air/return air connecting rod to balance the outside air damper pressure drop against the return static pressure, using the following steps. If no adjustment is necessary, proceed to step 17.

12. Remove the drive rod and swivel from the crank arm(s). If only one hole requires changing, loosen only that end.
13. Manually open the return air dampers to the full open position.
14. Manually close the outside air dampers.
15. Reattach the drive rod and swivel to the appropriate hole(s). The length of the drive rod may need to be adjusted to align with the new hole(s) location. If so, loosen the lock nut on the drive rod against the swivel. Turn the swivel “in” or “out” to shorten or lengthen the rod as necessary. For some holes, both ends of the rod may need to be adjusted.
16. Tighten the lock nut against the swivel(s).
17. Plug the holes after the proper CFM has been established.

Figure 96. Outside air and return air linkage adjustment (standard and low leak dampers only)

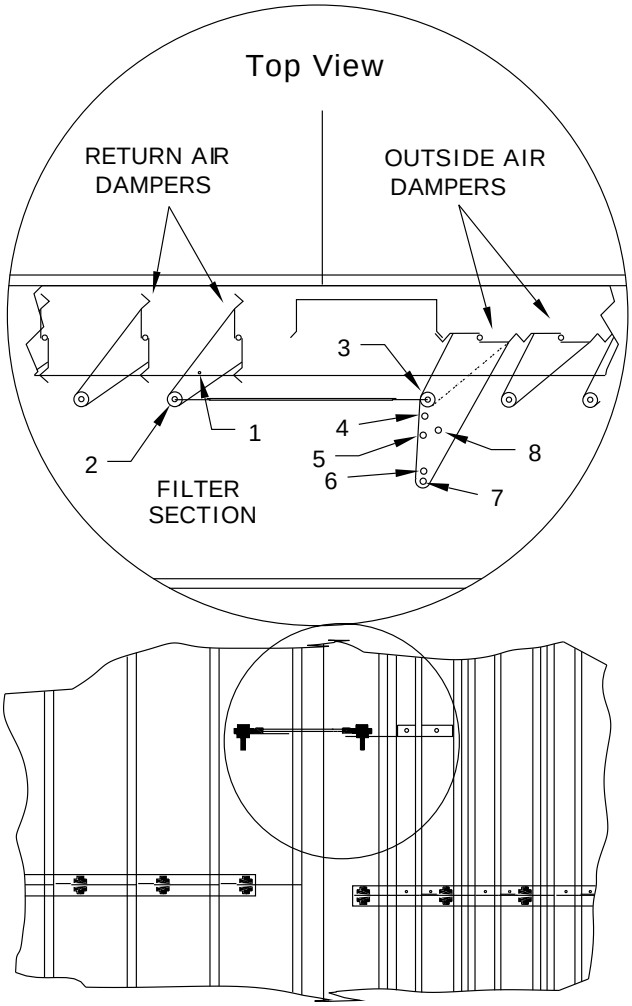

Figure 97. Outside air linkage adjustment (ultra low leak dampers only)

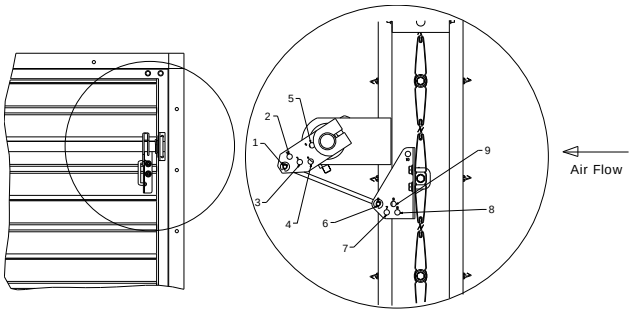

Table 50. O/A Damper travel adjustment

Position of Connecting Rod	Damper Crank Arm Hole Configuration	
	Standard and Low Leak F/A Dampers (Figure 96, p. 110)	Ultra Low Leak F/A Dampers(Figure 97, p. 110)
Position #1	2–3	1–6
Position #2	2–4	2–6
Position #3	2–5	3–7
Position #4	2–6	4–8
Position #5	1–8	5–9
Position #6	1–7	5–7

Use Table 51, p. 111 to select the appropriate crank arm hole configuration based on the following:

- specific unit
- operating CFM
- and return static pressure

Table 51. Outside air damper pressure drop (inches w.c.) — air-cooled

CFM	Damper Position					
	#1	#2	#3	#4	#5	#6
20, 25 Ton						
4000	0.03	0.04	0.06	0.13	0.16	0.33
6000	0.03	0.04	0.10	0.20	0.30	0.90
8000	0.19	0.21	0.32	0.52	0.75	1.75
9000	0.30	0.35	0.48	0.76	1.08	2.40
10000	0.45	0.51	0.70	1.05	1.57	-
11000	0.62	0.71	0.95	1.42	2.15	-
30						
6000	0.03	0.04	0.07	0.15	0.20	0.43
8000	0.03	0.05	0.11	0.21	0.30	0.90
10000	0.15	0.19	0.26	0.43	0.62	1.50
11000	0.20	0.25	0.37	0.60	0.85	1.85
12000	0.31	0.36	0.50	0.79	1.10	2.40
13000	0.42	0.48	0.62	0.97	1.42	-
40, 48 Ton						
8000	0.03	0.04	0.08	0.16	0.21	0.52
10000	0.03	0.05	0.11	0.21	0.30	0.90
12000	0.10	0.13	0.21	0.38	0.55	1.40
14000	0.20	0.25	0.37	0.60	0.85	1.85
16000	0.41	0.46	0.60	0.94	1.38	-
18000	0.56	0.65	0.74	1.28	1.92	-
50, 55 Ton						

Table 51. Outside air damper pressure drop (inches w.c.) — air-cooled (continued)

CFM	Damper Position					
	#1	#2	#3	#4	#5	#6
10000	0.03	0.04	0.09	0.18	0.23	0.55
14000	0.09	0.12	0.20	0.35	0.50	1.36
18000	0.31	0.36	0.50	0.79	1.10	-
20000	0.45	0.51	0.70	1.05	1.57	-
22000	0.58	0.66	0.75	1.30	1.95	-
24000	0.75	0.88	1.10	1.75	2.50	-
(60, 70, 75 Ton) Units						
14000	0.03	0.04	0.12	0.25	0.35	1.05
18000	0.19	0.21	0.32	0.52	0.75	1.75
22000	0.45	0.51	0.70	1.05	1.57	-
26000	0.70	0.80	1.02	1.58	2.30	-
28000	0.88	1.03	1.30	2.20	-	-
30000	1.05	1.22	1.55	2.65	-	-
(90 to 130 Ton) Units						
27000	0.31	0.36	0.50	0.79	1.10	2.40
32000	0.55	0.64	0.72	1.25	1.88	-
36000	0.75	0.88	1.10	1.75	2.50	-
40000	1.00	1.18	1.50	2.50	-	-
43000	1.20	1.42	1.92	-	-	-
46000	1.40	1.58	2.29	-	-	-

Compressor Startup (All Systems)

NOTICE

Compressor Failure!

Failure to follow instruction below could result in compressor failure.

Unit must be powered and crankcase heaters energized at least 8 hours BEFORE compressors are started.

1. Ensure that the “System” selection switch at the remote panel is in the “Off” position.
2. Before closing the disconnect switch, ensure that the compressor discharge service valve for each circuit is back seated.

NOTICE

Compressor Damage!

Excessive liquid accumulation in the suction lines could result in compressor damage.

Do not allow liquid refrigerant to enter the suction line.

Important: *COMPRESSOR SERVICE VALVES MUST BE FULLY OPENED BEFORE STARTUP (SUCTION, DISCHARGE, AND OIL LINE).*

3. Close the disconnect switch or circuit protector switch that provides the supply power to the unit terminal block (2XD1 on 20-75T units / 1XD1 on 90-130T units) or the unit mounted disconnect switch (2QB1 on 20-75T units / 1QB1 on 90-130T units).
4. Turn the 115 volt control circuit switch (1S1) to the "On" position.

   Turn the 115 volt control circuit switch (1S20) to the "On" position. (90-130T units only)
5. Allow compressor crankcase heaters to operate for a minimum of 8 hours before continuing.

   Important: *Compressor Damage could occur if the crankcase heater is not allowed to operate the minimum of 8 hours before starting the compressor(s).*
6. Open the access door located in the unit control panel, and press Manual Overrides to display the first service screen. Refer to the latest edition of the applications programming guide (RT-SVP07*-EN) for applications for the Manual Overrides screens and programming instructions.
7. Use tables in "," to program the following system components for operation by scrolling through the displays:

   20–30 Ton
   - Compressor 1A (On)
   - Compressor 1B (Off)
   - Condenser Fans

   40-75 ton (VSC units only)
   - Compressor 1A (On)
   - Compressor 2A (Off)
   - Compressor 2B (Off)
   - Condenser Fans

   40-130 ton
   - Compressor 1A (On)
   - Compressor 1B (Off)
   - Compressor 2A (Off)
   - Compressor 2B (Off)
   - Condenser Fans
8. Attach a set of service gauges onto the suction and discharge gauge ports for each circuit. See Figure 98, p. 114 for the various compressor locations.
9. Once the configuration for the components is complete, press the NEXT key until the LCD displays the "Start test in __Sec." screen. Press the + key to designate the delay before the test is to start. This service test will begin after the TEST START key is pressed and the delay designated in this step has elapsed. Press the ENTER key to confirm this choice.

⚠ WARNING

Rotating Components!

Failure to disconnect power before servicing could result in rotating components cutting and slashing technician which could result in death or serious injury.
During installation, testing, servicing and troubleshooting of this product it may be necessary to work with live and exposed rotating components. Have a qualified or licensed service individual who has been properly trained in handling exposed rotating components, perform these tasks.

10. Press the Auto key to start the test. Remember that the delay designated in step 8 must elapse before the system will begin to operate.
11. Review and follow the Electrical Phasing procedure described in the startup procedure of the IOM. If the compressors are allowed to run backward for even a very short period of time, internal compressor damage may occur and compressor life may be reduced. If a scroll compressor is rotating backwards, it will not pump, make a loud rattling sound and low side shell gets hot. Immediately shut off the unit. If the phasing is incorrect, interchange any two compressor leads to correct the motor phasing.
12. Press the STOP key and clear all Manual Overrides in the unit control panel to stop the compressor operation.
13. Repeat steps 5–11 for each compressor stage and the appropriate condenser fans.

Refrigerant Charging

1. Attach a set of service gauges onto the suction and discharge gauge ports for each circuit. See Figure 98, p. 114 for the various compressor locations.
2. Open the access door, located in the unit control panel, and press the Manual Overrides key to display the first service screen. Refer to the latest edition of the applications programming guide for VAV applications for the Manual Overrides screens and programming instructions.
3. Use tables in "," to program the following system components for the number 1 refrigeration circuit by scrolling through the displays;

   OCC/UNOCC Relay (Unoccupied for VAV units)

   All Compressors for each circuit (On)

   Condenser Fans for each circuit (On)

⚠ WARNING

Rotating Components!

Failure to disconnect power before servicing could result in rotating components cutting and slashing technician which could result in death or serious injury.

Disconnect all electric power, including remote disconnects before servicing. Follow proper lockout/tagout procedures to ensure the power can not be inadvertently energized.

4. Press the Auto Button key to start the test. Remember that the delay designated in step 4 must elapse before the system will begin to operate.
5. After all of the compressors and condenser fans for the number 1 circuit have been operating for approximately 30 minutes, observe the operating pressures. Use the appropriate pressure curve found in "Pressure Curves," p. 100 to determine the proper operating pressures. For superheat and subcooling guidelines, refer to "Electronic Expansion Valves," p. 116.

   Important: *Do Not release refrigerant to the atmosphere! If adding or removing refrigerant is required, the service technician must comply with all Federal, State and local laws.*
6. Verify that the oil level in each compressor is correct. The oil level may be down to the bottom of the sightglass but should never be above the sightglass.
7. Press the STOP key and clear all Manual Overrides in the unit control panel to stop the system operation.
8. Repeat steps 1 through 8 for the number 2 refrigeration circuit.

Compressor Crankcase Heaters

Please see the table below for the crankcase heater sizes used for each compressor type.

Table 52. Crankcase heater sizes

Compressor Name	Crankcase Heater Watts
ZPS*	70
ZP*	90
CSHD*	
VZH088*, VZH117*	

Table 52. Crankcase heater sizes (continued)

Compressor Name	Crankcase Heater Watts
VZH170*	160
CSHN*	

Compressor Operational Sounds

At Low Ambient Start-Up

When the compressor starts up under low ambient conditions, the initial flow rate of the compressor is low due to the low condensing pressure. This causes a low differential across the expansion valve that limits its capacity. Under these conditions, it is not unusual to hear the compressor rattle until the suction pressure climbs and the flow rate increases.

Variable Speed Compressors

At all operating speeds, eFlex™ permanent magnet variable speed compressors sound different than fixed speed scrolls. At low speed, variable speed compressors can sputter. At high speed, variable speed compressor buzz. These are normal operating sounds. To ensure a quiet installation, eFlex variable speed compressors are installed in a sound enclosure. Make sure and keep the sound enclosure installed at all times other than servicing.

Important: *Variable speed scroll compressors sound different than single speed scroll compressors. Sound changes with speed and condition.*

Electronic Compressor Protection Module (CPM)

The CSHN*** compressors come equipped with a compressor protection device (CPM) capable of detecting phase reversal, phase loss, and motor overheating. When a fault is identified, the output relay will open. Depending on the fault, the CPM may either auto-reset or it may lock-out. The CPM can be manually reset by cycling control power.

Note: *If the compressor has tripped due to an overheated windings condition, the motor winding temperature sensor resistance (PTC) will be 4500 ohms or greater; the resistance must be less than 2750 ohms before the 5 minute reset timer becomes enabled.*

Figure 98. Compressor locations

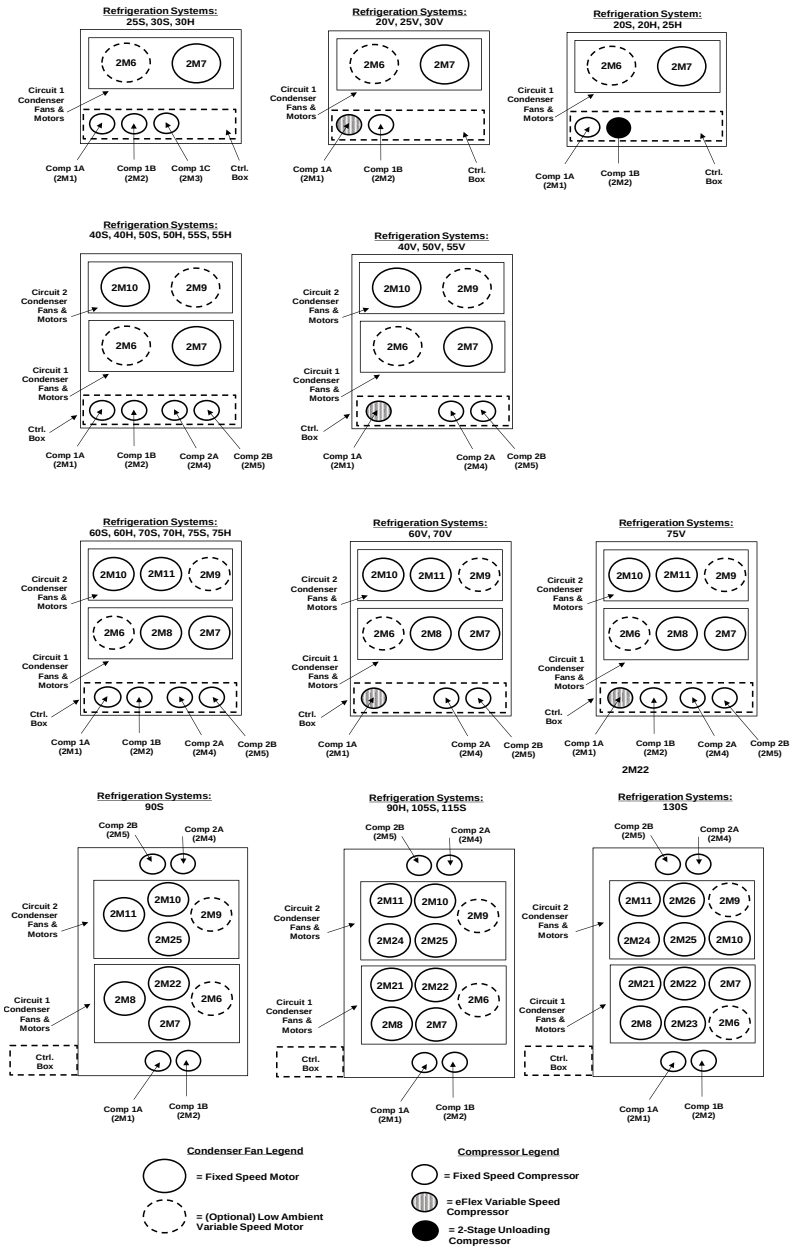

Note: *For refrigeration system names listed here, please refer to Model Number Digit 26 to differentiate between the 'S', 'H', and 'V' designations.*

Table 53. Fixed speed staging sequence and compressor data

20T (Std), 20T (High)				
Stage	**Comp 1A**	**Comp 1B**		
1		X Unloaded		
2		X Loaded		
3	X	X Unloaded		

Table 53. Fixed speed staging sequence and compressor data (continued)

20T (Std), 20T (High)				
Stage	**Comp 1A**	**Comp 1B**		
4	X	X Unloaded		
25T (Std), 30T (Std), 30T (High)				
Stage	**Comp 1A**	**Comp 1B**	**Comp 1C**	
1	X			
2		X		
3	X	X		
4		X	X	
5	X	X		
20T (High)				
Stage	**Comp 1A**	**Comp 1B**		
1		X Unloaded		
2		X Loaded		
3	X			
4	X	X Unloaded		
5	X	X Loaded		
40T - 130T (All Std. and High Efficiency Systems)				
Stage	**Comp 1A**	**Comp 1B**	**Comp 2A**	**Comp 2B**
1	X			
2	X		X	
3	X	X	X	
4	X	X	X	X

Table 54. eFlex™ staging sequence and compressor data

20 Ton eFlex™ Variable Speed Compressor				
Stage	Comp 1A VZH088	Comp 1B	VZH	
			Min Spd	Max Spd
1	X		1500	5820
2	X	X	1500	5400
25 Ton eFlex™ Variable Speed Compressor				
Stage	Comp 1A VZH088	Comp 1B	VZH	
			Min Spd	Max Spd
1	X		1620	6000
2	X	X	1500	6000
30 Ton eFlex™ Variable Speed Compressor				
Stage	Comp 1A VZH117	Comp 1B	VZH	
			Min Spd	Max Spd
1	X		25	100
2	X	X	25	83

Table 54. eFlex™ staging sequence and compressor data (continued)

40 Ton eFlex™ Variable Speed Compressor					
Stage	Comp 1A VZH117	Comp 2A	Comp 2B	VZH	
				Min Spd	Max Spd
1	X			1800	4860
2	X	X		1500	5460
3	X	X	X	2400	5580
50 Ton eFlex™ Variable Speed Compressor					
Stage	Comp 1A VZH170	Comp 2A	Comp 2B	VZH	
				Min Spd	Max Spd
1	X			1620	4200
2	X	X		1500	4740
3	X	X	X	2340	4800
55 Ton eFlex™ Variable Speed Compressor					
Stage	Comp 1A VZH170	Comp 2A	Comp 2B	VZH	
				Min Spd	Max Spd
1	X			1740	4560
2	X	X		1800	5280
3	X	X	X	2520	5280
60 Ton eFlex™ Variable Speed Compressor					
Stage	Comp 1A VZH170	Comp 2A	Comp 2B	VZH	
				Min Spd	Max Spd
1	X			1920	4740
2	X	X		1500	5700
3	X	X	X	2520	5820
70 Ton eFlex™ Variable Speed Compressor					
Stage	Comp 1A VZH170	Comp 2A	Comp 2B	VZH	
				Min Spd	Max Spd
1	X			2220	5220
2	X	X		1500	6000
3	X	X	X	2220	6000

75 Ton eFlex™ Variable Speed Compressor						
Stage	Comp 1A VZH170	Comp 1B	Comp 2A	Comp 2B	VZH	
					Min Spd	Max Spd
1	X				2520	5160
2	X		X		1500	4500
3	X		X	X	1500	5040
4	X	X	X	X	1500	5880

Electronic Expansion Valves

All Intellipak1 with Symbio systems use electronic expansion valves (EXV's) to control superheat. These valves are factory set to 12°F of superheat to balance efficiency and compressor reliability at all operating conditions.

This setting can be adjusted through the Symbio controller display, but this only recommended to be done at the discretion of Trane Product Support

Pressure curves included in this document are based on outdoor ambient between 65° & 105°F, relative humidity above 40 percent. Measuring the operating pressures can be meaningless outside of these ranges.

Measuring Superheat

1. Measure the suction pressure at the suction line gauge access port located near the compressor.
2. Using a Refrigerant/Temperature chart, convert the pressure reading to a corresponding saturated vapor temperature.
3. Measure the suction line temperature as close to the expansion valve bulb, as possible. Use a thermocouple type probe for an accurate reading.
4. Subtract the saturated vapor temperature obtained in step 2 from the actual suction line temperature obtained in step 3. The difference between the two temperatures is known as “superheat”.

When adjusting superheat, recheck the system subcooling before shutting the system “Off”.

Note: *If unit includes the modulating reheat dehumidification option, adjust superheat only in the cooling mode of operation.*

Note: *Due to the placement of the sensors that control the refrigeration system's electronic expansion valves, it is possible that there will be differences between what is measured by the method described above, and what is shown on the Symbio controller display for its current superheat measurement. This by itself is not a cause for concern or reason to adjust operating parameters in the Symbio controller.*

When communicating with Trane Product Support, please report the superheat value(s) described above (obtained with refrigerant gauges), and follow their guidance for any controller adjustments which should be attempted.

Charging by Subcooling

Before beginning the charging procedure, locate the “Pressure Curves,” p. 100 figure which corresponds to your refrigeration system. This plot will indicate the approximate discharge pressure which should be observed when the unit has the correct amount of subcooling.

The outdoor ambient temperature must be between 65 and 105°F and the relative humidity of the air entering the evaporator must be above 40 percent. When the temperatures are outside of these ranges, measuring the operating pressures can be meaningless. Do not attempt to charge the system with hot gas bypass operating (if applicable). Disable the low ambient dampers in the “Open” position (refer to the “Low Ambient Options” section) and de-energize the hot gas bypass valves before taking performance measurements. With the unit operating at “Full Circuit Capacity”, acceptable subcooling ranges for air-cooled units is between 10°F to 23°F.

Note: *If unit includes the modulating reheat dehumidification control option, adjust subcooling only in the cooling mode of operation.*

Measuring Subcooling

1. At the liquid line service port, measure the liquid line pressure. Using an R–410A pressure/temperature chart, convert the pressure reading into the corresponding saturated temperature.
2. Measure the actual liquid line temperature as close to the liquid line service port as possible. To ensure an accurate reading, clean the line thoroughly where the temperature sensor will be attached. After securing the sensor to the line, insulate the sensor and line to isolate it from the ambient air. Use a thermocouple type probe for an accurate reading.

   Note: *Glass thermometers do not have sufficient contact area to give an accurate reading.*
3. Determine the system subcooling by subtracting the actual liquid line temperature (measured in step 2) from the saturated liquid temperature (converted in step 1).

Low Ambient Options

Operation

When the Low Ambient option is selected for IntelliPak 1 with Symbio systems, its function will be accomplished by the usage of at least one variable speed condenser fan motor on each circuit to actively keep the refrigerant discharge pressure within a defined range, in order to maintain acceptable refrigerant pressure differences throughout the system.

The low ambient modulating output(s) on the compressor module controls the condenser fan airflow for each refrigerant circuit in response to saturated condensing temperature.

When the head pressure control has staged up to fan stage 2 or 3, the modulating output will be at 100%. When the head pressure control is at fan stage 1, the modulating output will control the saturated condensing temperature to within the programmable “condensing temperature low ambient control point”.

The following Table gives the minimum starting temperatures for both “Standard” & “Low” Ambient units. Do not start the unit in the cooling mode if the ambient temperature is below the recommended operating temperatures.

Table 55. Minimum starting temperatures for air-cooled units

Unit Size	Minimum Starting Ambient	
	Standard	Low Ambient
20 & 40	50°	0°
25 & 30	50°	0°
50, 55	50°	0°
60	50°	0°
70-130	50°	0°

Note: Min. starting ambients in °F and is based on unit operating at min. step of unloading and 5 mph wind across condenser.

Standard Ambient Condenser Fans

Standard ambient units stage condenser fans down to a minimum of one fan per circuit. All standard ambient units ship with the Symbio™ controller set to allow mechanical cooling down to 50°F outdoor temperature. This setting is adjustable. Below table lists the minimum recommended mechanical cooling setting for standard ambient units by application and unit type.

Table 56. Minimum outside air temperature

Standard Unit Minimum Outside Air Temperature for Mechanical Cooling	Std & High Cap units	eFlex™ units	
		20, 60, 70, 75 ton	25, 30, 40, 50, 55 ton
Economizer - A/C Applications	45°F	45°F	50°F
No Economizer - 80/67F design return air	45°F	45°F	55°F
No Economizer - 90/78F design return air	50°F	50°F	70°F

Low Ambient Condenser Fans

When a unit is ordered with the low ambient option (i.e., Digit 19 is a “1” in the model number), it can affect the selection of condenser fan motors. Please see the table below and “Compressor Blink Codes,” p. 113 to see which fan motors will be variable speed.

Ton-nage	Efficiency Tier	Low Ambient Variable Speed Condenser Fans	
		Circuit 1	Circuit 2
20	Std. & High	2M6	-
	eFlex	All	-
25	Std.	2M6	-
	High & eFlex	All	-
30	Std. & High	2M6	-
	eFlex	All	-
40	Std.	2M6	2M9
	High & eFlex	All	All
50	Std.	2M6	2M9
	High & eFlex	All	All
55	Std.	2M6	2M9
	High & eFlex	All	All
60	Std. & High	2M6	2M9
	eFlex	All	All
70	Std. & High	2M6	2M9
	eFlex	All	All
75	Std. & High	2M6	2M9
	eFlex	All	All
90	Any	2M6	2M9
105	Any	2M6	2M9
115	Any	2M6	2M9
130	Any	2M6	2M9

Electric, Steam and Hot Water Start-Up

(Variable Air Volume Systems)

1. Ensure that the “System” selection switch at the remote panel is in the Off position.
2. Close the disconnect switch or circuit protector switch that provides the supply power to the unit terminal block (1TB1) or the unit-mounted disconnect switch (1S14).

⚠ WARNING

Hazardous Voltage!

Failure to disconnect power before servicing could result in death or serious injury.

Disconnect all electric power, including remote disconnects before servicing. Follow proper lockout/tagout procedures to ensure the power can not be inadvertently energized. Verify that no power is present with a voltmeter.

Important: *Do not open the service access doors while the unit is operating. HIGH VOLTAGE IS PRESENT AT TERMINAL BLOCK OR UNIT DISCONNECT SWITCH (1S14).*

3. Turn the 115 volt control circuit switch (1S1) and the 24 volt control circuit switch (1S70) to the On position.
4. Open the User Interface access door, located in the

unit control panel, and press the Manual Overrides key to display the first service screen. Refer to the latest edition of the appropriate programming manual for VAV applications for the Manual Overrides screens and programming instructions.

5. Use tables in "," to program the following system components for operation by scrolling through the User Interface displays:

   Electric Heat

   Heat Stages - 1, 2, or 3 (as required)

   Steam or Hot Water Heat

   Hydronic Heat Actuator (100% Open)

   Open the main steam or hot water valve supplying the rooftop heater coils.

6. Once the configuration for the appropriate heating system is complete, press the Auto key.

⚠ WARNING

Rotating Components!

Failure to disconnect power before servicing could result in rotating components cutting and slashing technician which could result in death or serious injury.
During installation, testing, servicing and troubleshooting of this product it may be necessary to work with live and exposed rotating components. Have a qualified or licensed service individual who has been properly trained in handling exposed rotating components, perform these tasks.

7. Press the TEST START key to start the test. Remember that the delay designated in step 6 must elapse before the fan will begin to operate.
8. Once the system has started, verify that the electric heat or the hydronic heat system is operating properly by using appropriate service technics; i.e. amperage readings, delta tees, etc.
9. Press the STOP key at the User Interface Module in the unit control panel to stop the system operation.

Electric, Steam and Hot Water Start-Up

1. Ensure that the "System" selection switch at the remote panel is in the Off position.
2. Close the disconnect switch or circuit protector switch that provides the supply power to the unit terminal block (2XD1 on 20-75T units / 1XD1 on 90-130T units)or the unit-mounted disconnect switch (2QB1 on 20-75T units / 1QB1 on 90-130T units).

⚠ WARNING

Hazardous Voltage!

Failure to disconnect power before servicing could result in death or serious injury.
Disconnect all electric power, including remote disconnects before servicing. Follow proper lockout/ tagout procedures to ensure the power can not be inadvertently energized. Verify that no power is present with a voltmeter.

Important: *Do not open the service access doors while the unit is operating. HIGH VOLTAGE IS PRESENT AT TERMINAL BLOCK OR UNIT DISCONNECT SWITCH.*

3. Turn the 115 volt control circuit switch (1S1) to the "On" position.

   Turn the 115 volt control circuit switch (1S20) to the "On" position. (90-130T units only)

4. Press the Manual Override key to display the first service screen. Refer to the latest edition of the appropriate programming manual for VAV applications for the Manual Override screens and programming instructions.
5. Program the following system components for operation by scrolling through the displays:

   Electric Heat

   Heat Stages - 1, 2, or 3 (as required)

   Steam or Hot Water Heat

   Hydronic Heat Actuator (100% Open)

   Open the main steam or hot water valve supplying the rooftop heater coils.

6. Once the configuration for the appropriate heating system is complete, press the Auto key.

⚠ WARNING

Rotating Components!

Failure to disconnect power before servicing could result in rotating components cutting and slashing technician which could result in death or serious injury.
During installation, testing, servicing and troubleshooting of this product it may be necessary to work with live and exposed rotating components. Have a qualified or licensed service individual who has been properly trained in handling exposed rotating components, perform these tasks.

7. Press the Auto key to start the test. Remember that the delay designated in step 6 must elapse before the fan will begin to operate.
8. Once the system has started, verify that the electric heat or the hydronic heat system is operating properly by using appropriate service technics; i.e. amperage readings, delta tees, etc.

9. Press the STOP key and clear all Manual Overrides in the unit control panel to stop the system operation.

Gas Furnace Startup

⚠ WARNING

Hazardous Gases and Flammable Vapors!

Failure to observe the following instructions could result in exposure to hazardous gases, fuel substances, or substances from incomplete combustion, which could result in death or serious injury. The state of California has determined that these substances may cause cancer, birth defects, or other reproductive harm.

Improper installation, adjustment, alteration, service or use of this product could cause flammable mixtures or lead to excessive carbon monoxide. To avoid hazardous gases and flammable vapors follow proper installation and setup of this product and all warnings as provided in this manual.

⚠ WARNING

Explosion Hazard!

Failure to properly regulate pressure could result in a violent explosion, which could result in death, serious injury, or equipment or property-only-damage.

When using dry nitrogen cylinders for pressurizing units for leak testing, always provide a pressure regulator on the cylinder to prevent excessively high unit pressures. Never pressurize unit above the maximum recommended unit test pressure as specified in applicable unit literature.

⚠ WARNING

Rotating Components!

Failure to disconnect power before servicing could result in rotating components cutting and slashing technician which could result in death or serious injury.

During installation, testing, servicing and troubleshooting of this product it may be necessary to work with live and exposed rotating components. Have a qualified or licensed service individual who has been properly trained in handling exposed rotating components, perform these tasks.

Staged, Modulating, and Ultra Modulating

It is important to establish and maintain the appropriate air/fuel mixture to assure that the gas furnace operates safely and efficiently.

Since the proper manifold gas pressure for a particular installation will vary due to the specific BTU content of the local gas supply, adjust the burner based on carbon dioxide and oxygen levels rather than manifold pressure alone.

The volume of air supplied by the combustion blower determines the amount of oxygen available for combustion, while the manifold gas pressure establishes fuel input. By measuring the percentage of carbon dioxide produced as a by-product of combustion, the operator can estimate the amount of oxygen used and modify the air volume or the gas pressure to obtain the proper air/fuel ratio.

Confirming the correct air/fuel mixture for a furnace results in rated burner output, limited production of carbon monoxide, and a steady flame that minimizes nuisance shutdowns.

Note: *Prior to startup, ensure the gas supply line installation is adequate to maintain 7" w.c. for natural gas while the furnace is operating at full capacity.*

Two Stage Gas Furnace

2-stage gas heaters are available for the 235, 350, 500, 850, and 1000 MBh heater sizes.

Modulating Gas Furnace

Modulating gas heaters are available for the 500, 850, and 1000 MBh heater sizes.

Unit Control

The unit is controlled by at supply air temperature sensor located in the supply air stream for Discharge Temperature Control units. Zone Temperature Control units have two sensors, one located in the supply air stream and the zone sensor. The temperature sensor signal is sent to the Symbio controller of the IntelliPak Unit. The control signal from the Symbio controller is 0 – 10V DC for modulating gas heat. The higher the voltage signal, the higher the call for heat. For two stage heat, a relay is energized per stage of heat requested.

The gas heat controller manages the speed of the combustion blower. The greater the combustion air speed, the greater the call for gas and the higher the firing rate of the heater. As the temperature setpoint is reached, the modulating heat controller will cause the combustion air speed to change to a lower firing rate that matches the heat load of the space.

Two Stage and Modulating Burner Setup

Important: *: It is necessary to measure gas pressure at the following points listed below. Install the necessary fittings prior to starting the burner in the Manual Override.*

- *Inlet pressure*
- *Manifold pressure (see Figure 102, p. 124*

Important: *The flue reading should be taken from center of the flue and at least 4 inches down from the outlet. See Figure 100, p. 123 .*

Program the following system components for operation by scrolling through the User interface displays:

1. **Gas Heat**
   a. Open the manual gas valve, located in the gas heat section.
   b. Set toggle switch located on heater control box to ON.
   c. Press Stop button on User interface.
   d. Navigate to the Gas Heat Manual override screen. See Figure 99, p. 122 for 2–stage and Figure 104, p. 125 for modulating.Set the modulating percentage to 1% and/or enable the 1st stage. Touch the Auto button in the top right corner of the screen.
   e. Turn the Supply Fan ON by the navigating to the Manual Override Screen. Set the Fan speed to 100%.
2. **Low Fire O2 Adjustment**: After the initial purge sequence and once the burner has started, run the burner at low fire for 10 minutes to allow the burner to stabilize.
3. Use a flue analyzer to measure the oxygen (O_2), carbon dioxide (CO_2), and carbon monoxide (CO) levels in the flue gas.Take several readings to ensure burner operation is stable.
4. See Table 57, p. 122 for the required oxygen level during LOW fire operation. If the measured oxygen level is not within the specified range, turn the adjustment screw on the ratio regulato

   Refer to the illustration in Figure 101, p. 123 for adjustment screw location. For high O2, increase ½ turn (CW). For low O2, decrease ½ turn (CCW)
5. **High Fire O2 Adjustment:** Adjust the User interface to operate the furnace at max firing rate (100%) or 2nd Stage. Allow the system to operate for 10 minutes to allow the burner to stabilize.
6. Use a flue analyzer to measure the oxygen (O_2), carbon dioxide (CO_2), and carbon monoxide (CO) levels in the flue gas. Take several readings to ensure burner operation is stable.
7. See Table 57, p. 122 for the required oxygen level during HIGH fire operation. If the measured oxygen level is within the specified range and the carbon dioxide level is between 8.5 to 10% and the CO is less than 100 PPM, no adjustment is necessary. If an adjustment is needed, check the air damper on the burner (closing will increase the CO2 level). See Figure 103, p. 124 for air damper location. For high O2, close ½ notch. For low O2, open ½ notch.
8. If any adjustments were made during Low Fire O2 Adjustment and High Fire O2 Adjustment, repeat Steps 1 through 7 to confirm oxygen levels for both low and high fire are within specified range on Table 57, p. 122.
9. **Low Fire Manifold Pressure:** Adjust the User interface to operate the furnace at low firing rate (1%) and/or 1st Stage. Allow the system to operate for 10 minutes to allow the burner to stabilize. Check manifold pressure at tap closest to where the valve train attaches to the burner.
10. See Table 57, p. 122 for the expected manifold pressure during LOW fire operation. If manifold pressure is not within the specified range, adjust P0 (ignition speed of blower) and P1 (low fire speed of blower). See "Adjusting P0, P1, and P2 via the Siemens LME7 Built-in Display," p. 121 for instructions.

Important: *P0 and P1 should always match each other.*

11. **High Fire Manifold Pressure:** Adjust the User interface to operate the furnace at max firing rate (100%) or 2nd Stage. Allow the system to operate for 10 minutes to allow the burner to stabilize. Check manifold pressure at tap closest to where the valve train attaches to the burner.
12. See Table 57, p. 122 for the expected manifold pressure during HIGH fire operation. If manifold pressure is not within the specified range, adjust P2 (high fire speed of blower). See "Adjusting P0, P1, and P2 via the Siemens LME7 Built-in Display," p. 121 for instructions.
13. If any adjustments were made during Low Fire Manifold Pressure and High Fire Manifold Pressure, repeat Steps 9 through 12 to confirm manifold pressures for both low and high fire are within specified range on Table 57, p. 122.
14. Adjust the User interface to operate the furnace at low firing rate (1%) and 1st Stage. Recheck O2 (or CO2) and CO values.
15. Press the STOP key in the top right corner of the User interface screen and remove manual overrides to stop the system operation.

Adjusting P0, P1, and P2 via the Siemens LME7 Built-in Display

1. While in standby (OFF), press and hold the A button and either the + or - button for more than five seconds until "OFF" starts blinking.
2. Give the LME7 a call for heat. The LME7 will proceed to start the burner. After prepurge is complete, the LME7 will slow the blower down to the preset ignition speed (P0).
3. At this point, the LME7 will alternately display P0 and a three-digit number. The three-digit number is the setting of the ignition speed P0 divided by 10. For example, if the display alternately displays P0 and 200, this means that the ignition speed is currently set for 2000 RPM.
4. To adjust the ignition speed, press and hold the A button while simultaneously pressing the + or - button to increase or decrease the speed respectively. The speed of the blower will change in real time. Once the desired ignition speed P0 has been set, press the info button.

5. The startup of the burner will continue. The burner will light off and establish flame. Once the burner has lit off, it will drive to the preset low fire speed (P1).
6. The LME7 will then alternately display P1 and a three-digit number that is representative of the low fire speed divided by 10. To adjust the low fire speed, press and hold the A button while simultaneously pressing the + or - button to increase or decrease the speed respectively. The speed of the blower will change in real time. Once the desired low fire speed P1 has been set, press the info button.
7. The LME7 will immediately drive to the preset high fire speed P2.
8. The LME7 will then alternately display P2 and a three-digit number that is representative of the high fire speed divided by 10. To adjust the high fire speed, press and hold the A button while simultaneously pressing the + or - button to increase or decrease the speed respectively. The speed of the blower will change in real time. Once the desired high fire speed P2 has been set, press the info button.
9. Press the + and - buttons together (escape) to return to normal operation. The PWM blower will now respond to the external load control signal being supplied to the LME7.

Note: *For more information contact Large Commercial Technical Support.*

Figure 99. Gas Heat Manual Override screen — 2–stage

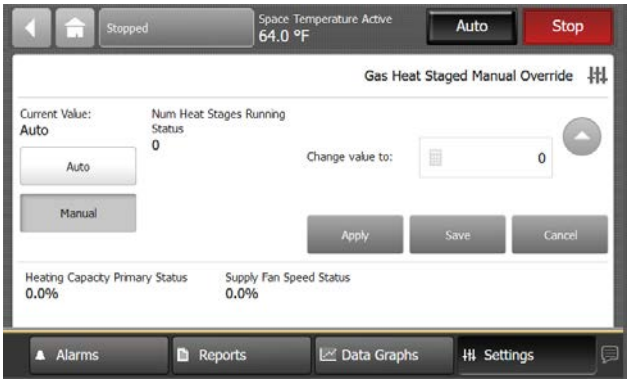

Table 57. Recommended manifold pressures and O2 levels for furnace operation — natural gas

Burner size	Low Fire (1%)		High Fire (100%)	
	O2 (%)	Manifold (in. w.c)	O2 (%)	Manifold (in. w.c)
235 MBH 2-stg	6.0 – 6.2	0.43 - 0.44	2.8 – 3.2	1.6 – 1.8
350 MBH 2-stg	6.6 – 6.9	0.3 – 0.4	2.8 – 3.2	1.2 -1.4
500 MBH 2-stg	5.3 – 5.5	0.65 -0.75	2.8 – 3.2	2.6– 2.8
500 MBH Mod	10.4 – 10.6	0.15 - 0.25	2.8 – 3.2	2.6 – 2.8
800 MBH 2-stg[a]	5.8 – 6.1	0.41 – 0.42	3.0 – 3.3	1.6 – 1.8
800 MBH Mod [a]	11.0 – 11.4	0 – 0.01	3.0 – 3.2	1.5 – 1.7
850 MBH 2-stg	5.9 - 6.2	0.43 – 0.45	2.8 – 3.2	1.7 – 2.0
850 MBH Mod	11.2 – 11.4	0 – 0.01	3.0 – 3.3	1.8 – 2.0
1000 MBH 2-stg	4.6 – 4.9	0.65 – 0.68	2.8 – 3.2	2.5 – 2.7
1000 MBH Mod	11.2 – 11.4	0 – 0.01	2.8 – 3.2	2.6 – 2.7

Note: *If the manifold pressure is not within the range shown on the chart, then the combustion fan speeds (P0, P1, and/or P2) need adjustment. Typically, in increments of 20-40 RPM*

[a] 800MBH is Horizontal Discharge. MBH is listed on gas heat rating plate.

Table 58. Recommended manifold pressures and O2 levels for furnace operation — LP

Burner size	Low Fire (1%)		High Fire (100%)	
	O2 (%)	Manifold (in. w.c)	O2 (%)	Manifold (in. w.c)
235 MBH 2-stg	5.5 - 5.7	0.17 - 0.19	3.8 - 4.0	0.81 - 0.83
350 MBH 2-stg	6.4 - 6.7	0.16 - 0.18	3.9 - 4.1	0.62 - 0.65
500 MBH 2-stg	5.6 - 5.8	0.32 - 0.33	3.9 - 4.1	1.29 - 1.31
500 MBH Mod	9.5 - 9.7	0.08 - 0.10	3.9 - 4.2	1.25- 1.31

Table 58. Recommended manifold pressures and O2 levels for furnace operation — LP (continued)

Burner size	Low Fire (1%)		High Fire (100%)	
	O2 (%)	Manifold (in. w.c)	O2 (%)	Manifold (in. w.c)
800 MBH 2-stg[a]	6.2 - 6.4	0.16 - 0.17	3.6 - 3.8	0.70 - 0.73
800 MBH Mod[a]	11.4 - 11.6	0 - 0.02	3.5 - 3.7	0.66 - 0.72
850 MBH 2-stg	5.9 - 6.1	0.18 - 0.21	3.8 - 4.0	0.79 - 0.8
850 MBH Mod	11.8 - 12.0	0 - 0.01	3.9 - 4.1	0.78 - 0.81
1000 MBH 2-stg	5.6 - 5.9	0.25 - 0.27	3.6 - 3.8	1.08 - 1.1
1000 MBH Mod	12.1 - 12.3	0 - 0.02	3.6 - 3.8	1.08 - 1.1

Note: *If the manifold pressure is not within the range shown on the chart, then the combustion fan speeds (P0, P1, and/or P2) need adjustment. Typically, in increments of 20-40 RPM*

[a] 800MBH is Horizontal Discharge. MBH is listed on gas heat rating plate.

Figure 100. Flue gas carbon dioxide and oxygen measurements

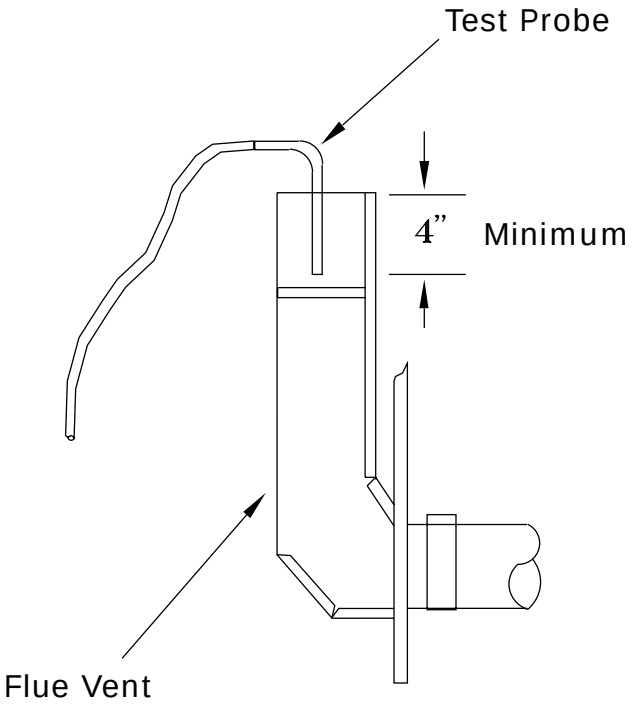

Figure 101. Ratio regulator - 2-stage and modulating

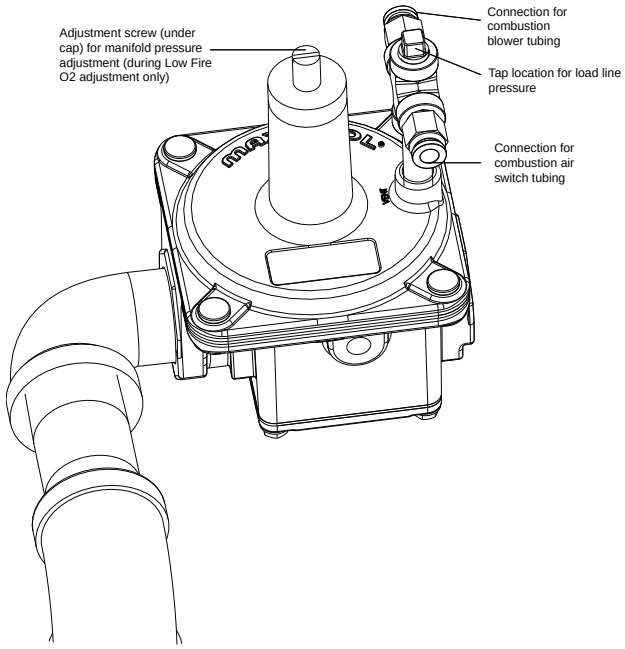

Figure 102. Manifold pressure tap location - 2-stage and modulating

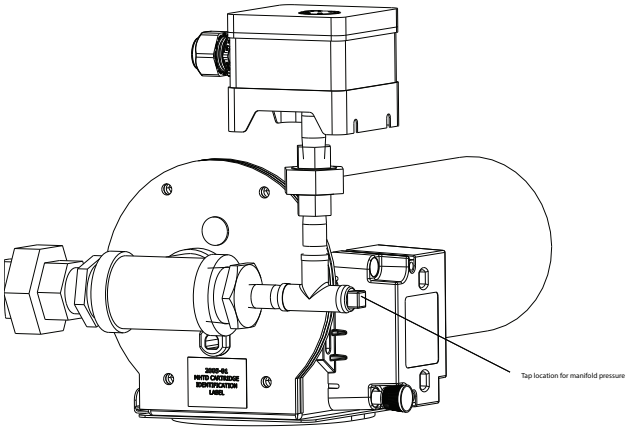

Figure 103. Air Damper location - 2-stage and modulating

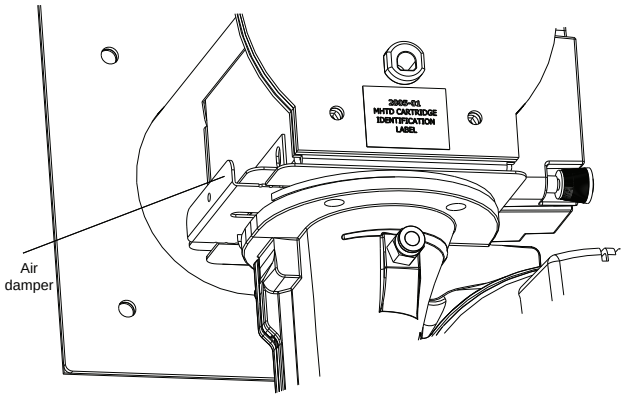

Ultra Modulating Gas Furnace

Ultra modulating gas heaters are available for the 500, 850 and 1000 MBh heater sizes.

Unit Control

The unit is controlled by a supply air temperature sensor located in the supply air stream for Discharge Temperature Control units. Zone Temperature Control units have two sensors, one located in the supply air stream and the zone sensor. The temperature sensor signal is sent to the Symbio controller of the IntelliPak unit. The control signal from the Symbio controller is 2-10V DC. The higher the voltage signal, the higher the call for heat.

The 2 -10V DC signal the heat output of the gas heat controller. The greater DC voltage, the greater the call for gas and the higher the firing rate of the heater. As the temperature setpoint is reached, the modulating heat controller will cause the combustion air speed to change to a lower firing rate that matches the heat load of the space.

Note: *See figures in "Ultra Modulating Burner Setup," p. 124 for 500/850MBh representation.*

Ultra Modulating Burner Setup

Important: *It is necessary to measure gas pressure at the following points listed below. Install the necessary fittings prior to starting the burner in the Manual Override.*

- *Inlet Pressure*
- *Main Gas Regulator outlet pressure*
- *Load Line Pressure*
- *Manifold Pressure*

Important: *Important: Flue readings should be taken from center of the flue and at least 4 inches down from the outlet. See Figure 100, p. 123.*

1. Program the following system components for operation by scrolling through the user interface displays:
   a. Open the manual gas valve, located in the gas heat section.
   b. Set toggle switch located on heater control box to ON.
   c. Press Stop button on user interface.
   d. Navigate to the Gas Heat Manual override screen. See Figure 104, p. 125. Set the modulating percentage to 1% and enable the 1st stage. Touch the Auto button in the top right corner of the screen.
   e. Turn the Supply Fan ON by the navigating to the Manual Override Screen. Set the Fan speed to 100%.

Low Fire Adjustment

2. After the initial purge sequence and once the burner has started, look through the burner sight glass for the appearance of light (from the flame) in the holes of the burner plate. If light is visible through ALL the holes, low fire is correctly set within the operating range of the burner. If light is not visible through all of the holes, turn the adjustment screw on the ratio regulator. Refer to the illustration in Figure 105, p. 126.
3. Use a flue analyzer to measure the oxygen (O_2), carbon dioxide (CO_2), and carbon monoxide (CO) levels in the flue gas.. If the measured O_2 level is between 17.0%-19.0% and the CO_2 level is no more than 400ppm (corrected to 3% O_2), no adjustment is necessary. If an adjustment is needed, turn the adjustment screw on the ratio regulator. CCW to increase O2, CW to decrease O2.

High Fire Adjustment

4. Adjust the user interface to operate the furnace at max firing rate (100%) or 2nd Stage. Allow the system to operate for 10 minutes.

   Note: *The burner capacity is controlled by the combustion fan speed. This has been preset at the factory and normally does not need field adjustment.*

5. Check the inlet pressure at the tap upstream of the pilot

regulator. Refer to the illustration in Figure 106, p. 126. The inlet pressure should between 7.0" to 14.0" w.c.

6. Check the outlet pressure of the main gas regulator at tap on the upstream solenoid valve. Refer to the illustration in Figure 106, p. 126. The outlet pressure from the main gas regulator should be 6.0" w.c.
7. Check manifold pressure at tap closest to where the valve train attaches to the burner. Refer to the illustration in Figure 107, p. 126. Verify the manifold pressure is 2.6"-2.9" w.c on 500 MBh, 1.6"-1.9" w.c. on 850 MBh, and 2.1"-2.4" w.c. on 1000 MBh. If manifold pressure is not within the specified range, contact Large Commercial Technical Support for information on how to adjust maximum fan speed (FHi).
8. Use a flue analyzer to measure the oxygen (O_2), carbon dioxide (CO_2), and carbon monoxide (CO) levels in the flue gas. If the measured oxygen level is between 3.0 to 5.0% and the carbon dioxide level is between 8.5 to 10% and the CO is less than 100 PPM, no adjustment is necessary. If an adjustment is needed, check the inlet gas pressure or the air damper on the burner (closing will increase the CO_2 level). See Figure 108, p. 126.

Mid Fire Adjustment

9. Adjust the user interface to operate the furnace at mid firing rate (approx. 38%).
10. Check the load line pressure on the ratio regulator. Using the Modulating Gas Heat Actuator screen adjust the % value until load line pressure is at 2" w.c.
11. Check manifold pressure at tap closest to where valve train attaches to the burner. Refer to the illustration in Figure 107, p. 126. Verify the manifold pressure is 0.8 - 0.9" w.c. If adjustment is necessary, turn the adjustment screw on the ratio regulator. Refer to illustration in for the adjustment screw location.
12. Program the burner for low fire operation (1%) and recheck O_2 (or CO_2) and CO values.
13. Press the STOP key on the user interface screen and remove manual overrides to stop the system operation.

Table 59. Chart A - ultra modulating service mode setup parameters

Modulating Gas Heat Actuator (Service Mode)	Low Fire (1%)	Mid Fire (38%) (see note)	High Fire (100%)
VDC Signal to actuator	2.0 VDC	5.0 VDC	10.0 VDC
Inlet Pressure	7.0" to 14.0"	7.0" to 14.0"	7.0" to 14.0"
Main Gas Regulator Pressure - NG	6.0"	6.0"	6.0"
Load Line Pressure - NG		2.0"	
Manifold Pressure - NG		0.8" to 0.9"	See chart B
Main Gas Regulator Pressure - LP	10.0"	10.0"	10.0"

Table 59. Chart A - ultra modulating service mode setup parameters (continued)

Modulating Gas Heat Actuator (Service Mode)	Low Fire (1%)	Mid Fire (38%) (see note)	High Fire (100%)
Load Line Pressure - LP		0.9"	
Manifold Pressure - LP		0.12" to 0.17"	See chart B

Note: *In the service mode, adjust the % output until the Load Line Pressure is correct, then verify/ adjust manifold pressure.*

Table 60. Chart B - high fire manifold pressure

Burner size	High Fire Manifold Pressure	
	NG	LP
500 MBh	2.6" to 2.9"	1.13"
850 MBh	1.6" to 1.9"	0.65"
800 MBh [a]	1.3" to 1.6"	0.59"
1000 MBh	2.1" to 2.4"	0.91"

Note: *If the manifold pressure is not within the range shown on the chart, then the maximum combustion fan speed (Fhi) needs adjustment. Contact Large Commercial Technical Support for assistance.*

[a] 800 MBh is horizontal discharge. MBh is listed on gas heat rating plate.

Figure 104. Gas Heat Manual Override screen - modulating

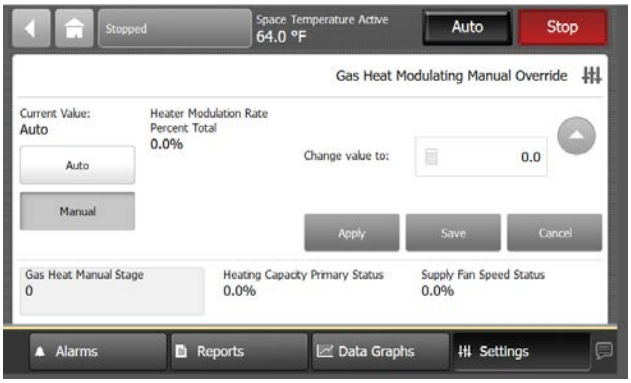

Figure 105. Ratio regulator — ultra modulating

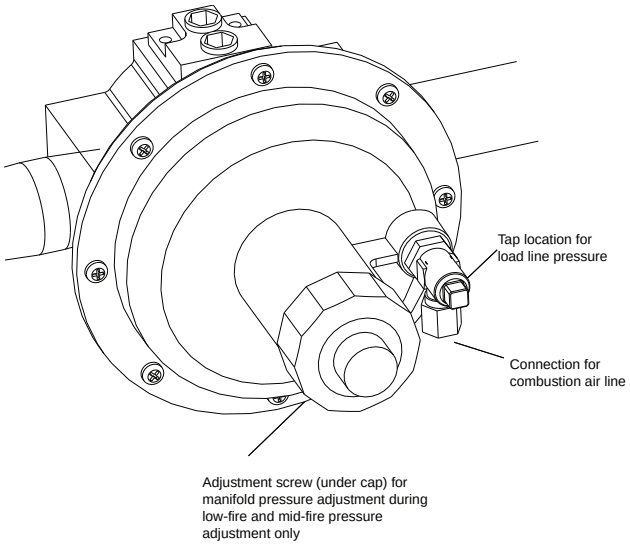

Figure 106. Main gas regulator and inlet pressure tap locations

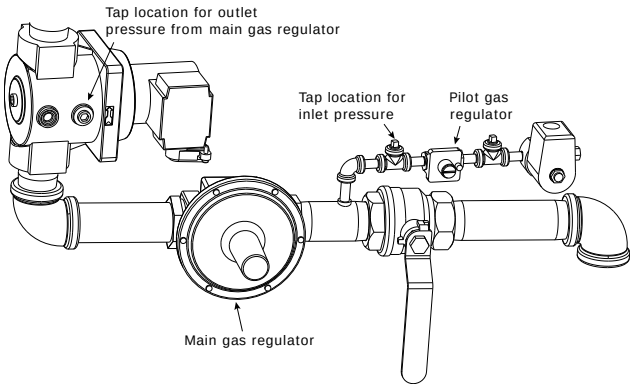

Figure 107. Manifold pressure tap location — ultra modulating

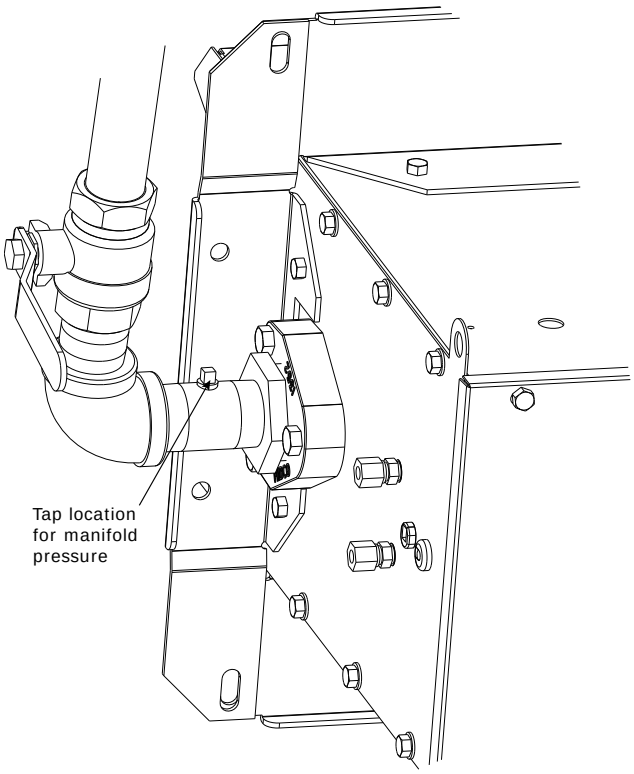

Figure 108. Air damper location - ultra modulating

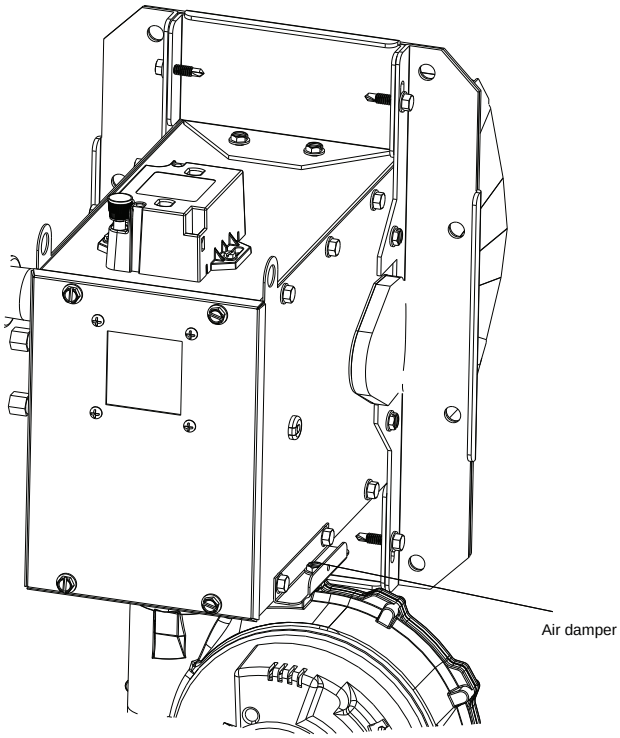

Final Unit Checkout

After completing all of the checkout and start-up procedures outlined in the previous sections (i.e., operating the unit in each of its Modes through all available stages of cooling and heating), perform these final checks before leaving the unit:

⚠ WARNING

Hazardous Voltage!

Failure to disconnect power before servicing could result in death or serious injury.

Disconnect all electric power, including remote disconnects before servicing. Follow proper lockout/tagout procedures to ensure the power can not be inadvertently energized. Verify that no power is present with a voltmeter.

Important: *HIGH VOLTAGE IS PRESENT AT TERMINAL BLOCK OR UNIT DISCONNECT SWITCH.*

- ☐ Close the disconnect switch or circuit protector switch that provides the supply power to the unit terminal block (2XD1 on 20-75T units / 1XD1 on 90-130T units)or the unit mounted disconnect switch (2QB1 on 20-75T units / 1QB1 on 90-130T units).
- ☐ Turn the 115 volt control circuit switch (1S1) to the "On" position.
- ☐ Turn the 115 volt control circuit switch (1S20) to the "On" position. (90-130T units only)
- ☐ Press the SETUP key. The LCD screen will display various preset “parameters of operation” based on the unit type, size, and the installed options. Compare the factory preset information to the specified application requirements. If adjustments are required, follow the step-by-step instructions provided in the appropriate programming manual for VAV applications.
- ☐ Inspect the unit for misplaced tools, hardware, and debris.
- ☐ Press the AUTO key to begin system operation. The system will start automatically once the dampers modulate and a request for either heating or cooling has been given.
- ☐ Verify that all exterior panels including the control panel doors and condenser grilles are secured in place.

Trane Startup Checklist

This checklist is intended to be a guide for the Trane technician just prior to unit 'startup'. Many of the recommended checks and actions could expose the technician to electrical and mechanical hazards. Refer to the appropriate sections in the this manual for appropriate procedures, component specifications and safety instructions.

Important: *This checklist is not intended as a substitution for the contractor's installation instruction.*

Important: *Except where noted, it is implied that the Trane technician is to use this checklist for inspection/verification of prior tasks completed by the general contractor at installation. Use the line item content to also record the associated values onto the Trane unitary packaged equipment log.*

Job Name		**Serial #**	
Job Location		**Model #**	
Sales Order #		**Ship Date**	
Unit DL # (special units)		**Date**	
Starting Sales Office		**Technician**	

Table 61. Startup checklist for 20–75 ton air-cooled units

		Completed?			
General Start-up					
1	Is adequate access/egress provided?		Yes		No
2	Initial site inspection performed?		Yes		No
3	Unit exterior inspected for damage (dents, bends, missing panels, doors work properly)?		Yes		No
4	Unit clearances adequate to avoid air recirculation?		Yes		No
5	Wear electrical PPE		Yes		No
6	Lockout & tagout unit		Yes		No
7	Verify unit interior is free from debris and obstructions, etc.		Yes		No
8	All unit drain lines and traps are properly installed		Yes		No
9	Remove electrical access panel fastened (9) bolt/screws or open access		Yes		No
10	Verify unit is grounded. Confirm a ground wire is coming from the power source		Yes		No
11	Verify main power feed wire gauge is properly sized for current load		Yes		No
12	Verify all wiring connections are tight		Yes		No
13	Verify all field control wiring for VAV controls are complete		Yes		No
14	Verify all automation and remote controls installed/wired		Yes		No
15	Verify all shipping hardware and plastic covers for compressors have been removed		Yes		No
16	Verify hold down bolts and channels from fan sections removed		Yes		No
17	Fan section isolators checked/adjusted (approximately ¼" gap above shipping block)		Yes		No
18	Verify damper linkages are tight/adjusted and tip seals are in good condition		Yes		No
19	Verify compressor oil levels at proper levels (½ - ¾ high in glass)		Yes		No
20	Compressor discharge service valves and oil valves open/back seated		Yes		No
21	All fan belts tensioned, bearings greased and sheaves in alignment		Yes		No
22	Verify supply and relief fan pulley bolts are tight		Yes		No
23	Verify fans rotate freely		Yes		No
24	Verify refrigerant charge on each circuit		Yes		No
25	Remove lock tag out		Yes		No
26	Wear electrical PPE		Yes		No
27	Verify correct voltage supplied to unit and electrical heaters (see IOM for assistance)		Yes		No
28	Allow compressor crankcase heaters to operate for 8 hours prior to starting the refrigeration system.		Yes		No
29	Verify incoming voltage phase balanced		Yes		No
30	Check the incoming power phase rotation.		Yes		No
31	Verify all fans rotate in proper direction		Yes		No
32	Verify fan amperages within nameplate specs (please document on log sheet)		Yes		No

Table 61. Startup checklist for 20–75 ton air-cooled units (continued)

		Completed?			
Unit Configuration and Setup					
1	Verify model number in the UCM configuration matches unit model number on nameplate		Yes		No
2	Configure unit using IOM and critical control parameters using critical control parameters table		Yes		No
Air Cooled Condenser (Digit 27)					
1	All coil fins inspected and straightened		Yes		No
2	Condenser fans are rotating freely		Yes		No
3	Verify the fan blade set-screws to the motor shaft of the condenser fan assemblies are tight		Yes		No
Electric Heat (if applicable)					
1	Electric heat circuits have continuity		Yes		No
2	Perform electric heat start up procedure		Yes		No
Gas Heat (if applicable)					
1	Gas heat piping includes drip leg previously installed by installing contractor		Yes		No
2	Gas heat flue assembly fully installed		Yes		No
3	Gas heat condensate line and heat tape installed where applicable		Yes		No
4	Verify heating system matches name plate		Yes		No
5	Perform gas heat start up procedure in IOM				
Hot Water Heat (if applicable)					
1	Verify hot water pipes are proper size, routed through the base and no leaks are present		Yes		No
2	Verify swing joints or flexible connectors are installed next to hot water coil		Yes		No
3	Verify gate valve is installed in the supply and return branch line		Yes		No
4	Verify three way modulating valve is installed with valve seating against the flow		Yes		No
5	Verify coil venting is installed if water velocity is less than 1.5 feet per second		Yes		No
Steam Water Heat (if applicable)					
1	Verify steam pipes are proper size, routed through the base and no leaks are present		Yes		No
2	Verify steam heat swing check vacuum breakers installed and vented		Yes		No
3	Verify 2-way modulating valve has been installed		Yes		No
4	Verify steam trap installed properly with discharge 12” below the outlet connection on the coil		Yes		No
System Checkout					
1	Verify system airflow		Yes		No
2	Verify dampers open and close properly		Yes		No
3	Adjust fresh air damper travel		Yes		No
4	Verify compressor operation, voltage and amperage matches name plate information (please document on log sheet)		Yes		No
5	Operating log completed		Yes		No
6	All panels & doors secured		Yes		No
7	Complete all required documentation		Yes		No

Table 62. Startup checklist for 90–130 ton air-cooled units

		Completed?			
General Start-up					
1	Is adequate access/egress provided?		Yes		No
2	Initial site inspection performed?		Yes		No
3	Unit exterior inspected for damage (dents, bends, missing panels, doors work properly)?		Yes		No
4	Unit clearances adequate to avoid air recirculation?		Yes		No
5	Wear electrical PPE		Yes		No
6	Lockout & tagout unit		Yes		No
7	Verify unit interior is free from debris and obstructions, etc.		Yes		No
8	All unit drain lines and traps are properly installed		Yes		No
9	Remove electrical access panel fastened (9) bolt/screws or open access		Yes		No
10	Verify unit is grounded. Confirm a ground wire is coming from the power source		Yes		No
11	Verify main power feed wire gauge is properly sized for current load		Yes		No
12	Verify all wiring connections are tight		Yes		No

Table 62. Startup checklist for 90–130 ton air-cooled units (continued)

		Completed?			
13	Verify all field control wiring for VAV controls are complete		Yes		No
14	Verify all automation and remote controls installed/wired		Yes		No
15	Verify all shipping hardware and plastic covers for compressors have been removed		Yes		No
16	Verify hold down bolts and channels from fan sections removed		Yes		No
17	Fan section isolators checked/adjusted (approx ¼" gap above shipping block)		Yes		No
18	Verify damper linkages are tight/adjusted and tip seals are in good condition		Yes		No
19	Verify compressor oil levels at proper levels (½ - ¾ high in glass)		Yes		No
20	Compressor discharge service valves and oil valves open/back seated		Yes		No
21	All fan belts tensioned, bearings greased and sheaves in alignment		Yes		No
22	Verify supply and relief fan pulley bolts are tight		Yes		No
23	Verify fans rotate freely		Yes		No
24	Verify refrigerant charge on each circuit		Yes		No
25	Remove lock tag out		Yes		No
26	Wear electrical PPE		Yes		No
27	Verify correct voltage supplied to unit and electrical heaters (see IOM for assistance)		Yes		No
28	Allow compressor crankcase heaters to operate for 8 hours prior to starting the refrigeration system.		Yes		No
29	Verify incoming voltage phase balanced		Yes		No
30	Check the incoming power phase rotation.		Yes		No
31	Verify all fans rotate in proper direction		Yes		No
32	Verify fan amperages within nameplate specs (please document on log sheet)		Yes		No
Unit Configuration and Setup					
1	Verify model number in the UCM configuration matches unit model number on nameplate		Yes		No
2	Configure unit using IOM and critical control parameters using critical control parameters table		Yes		No
Air Cooled Condenser (Digit 27)					
1	All coil fins inspected and straightened		Yes		No
2	Condenser fans are rotating freely		Yes		No
3	Verify the fan blade set-screws to the motor shaft of the condenser fan assemblies are tight		Yes		No
Electric Heat (if applicable)					
1	Electric heat circuits have continuity		Yes		No
2	Perform electric heat start up procedure		Yes		No
Gas Heat (if applicable)					
1	Gas heat piping includes drip leg previously installed by installing contractor		Yes		No
2	Gas heat flue assembly fully installed		Yes		No
3	Gas heat condensate line and heat tape installed where applicable		Yes		No
4	Verify heating system matches name plate		Yes		No
5	Perform gas heart start up procedure in IOM				
Hot Water Heat (if applicable)					
1	Verify hot water pipes are proper size, routed through the base and no leaks are present		Yes		No
2	Verify swing joints or flexible connectors are installed next to hot water coil		Yes		No
3	Verify gate valve is installed in the supply and return branch line		Yes		No
4	Verify three way modulating valve is installed with valve seating against the flow		Yes		No
5	Verify coil venting is installed if water velocity is less than 1.5 feet per second		Yes		No
Steam Water Heat (if applicable)					
1	Verify steam pipes are proper size, routed through the base and no leaks are present		Yes		No
2	Verify steam heat swing check vacuum breakers installed and vented		Yes		No
3	Verify 2-way modulating valve has been installed		Yes		No
4	Verify steam trap installed properly with discharge 12" below the outlet connection on the coil		Yes		No
System Checkout					
1	Verify system airflow		Yes		No
2	Verify dampers open and close properly		Yes		No
3	Adjust fresh air damper travel		Yes		No
4	Verify compressor operation, voltage and amperage matches name plate information (please document on log sheet)		Yes		No

Table 62. Startup checklist for 90–130 ton air-cooled units (continued)

		Completed?			
5	Operating log completed		Yes		No
6	All panels & doors secured		Yes		No
7	Complete all required documentation		Yes		No

Critical Control Parameters and Dry Bulb Changeover Map

Table 63. Critical control parameters

Description	Suggested Parameter	Economizer Settings						
		Region 1	Region 2	Region 3	Region 4	Region 5	Region 6	Region 7
Supply Air Temperature Control Setpoint	55°F							
Supply Air Temperature Deadband	8°F							
Supply Air Pressure Setpoint	1.8" w.c.							
Supply Air Pressure Deadband	0.1" w.c.							
Building Static Pressure Setpoint	0.03" w.c.							
Building Static Pressure Deadband	0.04" w.c.							
Standby Freeze Avoidance	20%							
Relief Enable Setpoint	10%							
Economizer Minimum Position Setpoint	10%							
Fixed Dry Bulb Economizer C/O Type a (Moist)*		TOA > 65° F	TOA > 65° F	TOA > 65° F	TOA > 65° F	TOA > 70° F	TOA > 70° F	TOA > 70° F
Fixed Dry Bulb Economizer C/O Type b (Dry)*	TOA > 75°F							
Fixed Dry Bulb Economizer C/O Type c (Marine)*				TOA > 75° F	TOA > 75° F	TOA > 75° F		
Fixed Reference (Enthalpy Changeover)	HOA > 28 Btu							
Differential Comparative (Enthalpy Changeover)	HOA > HRA							

Notes:

1. See map in next figure for dry bulb changeover.
   Examples:
   - Minneapolis, Minnesota is in “Region 6" and resides in “Moist” subregion, thus designation is 6b. Economizer changeover setting should be 75°F.
   - Charleston, South Carolina is in “Region 3" and resides in “Moist” subregion, thus the designation is 3c. Economizer changeover setting should be 65°F.
2. Go to SETUP menu and input setting for parameters listed in the table above.
3. Use the Dry bulb changeover map to determine region of country based on unit site location.
4. Fixed speed compressor units 8°F deadband.
5. eFlex™ compressor units 4°F deadband.

Figure 109. Dry bulb changeover map

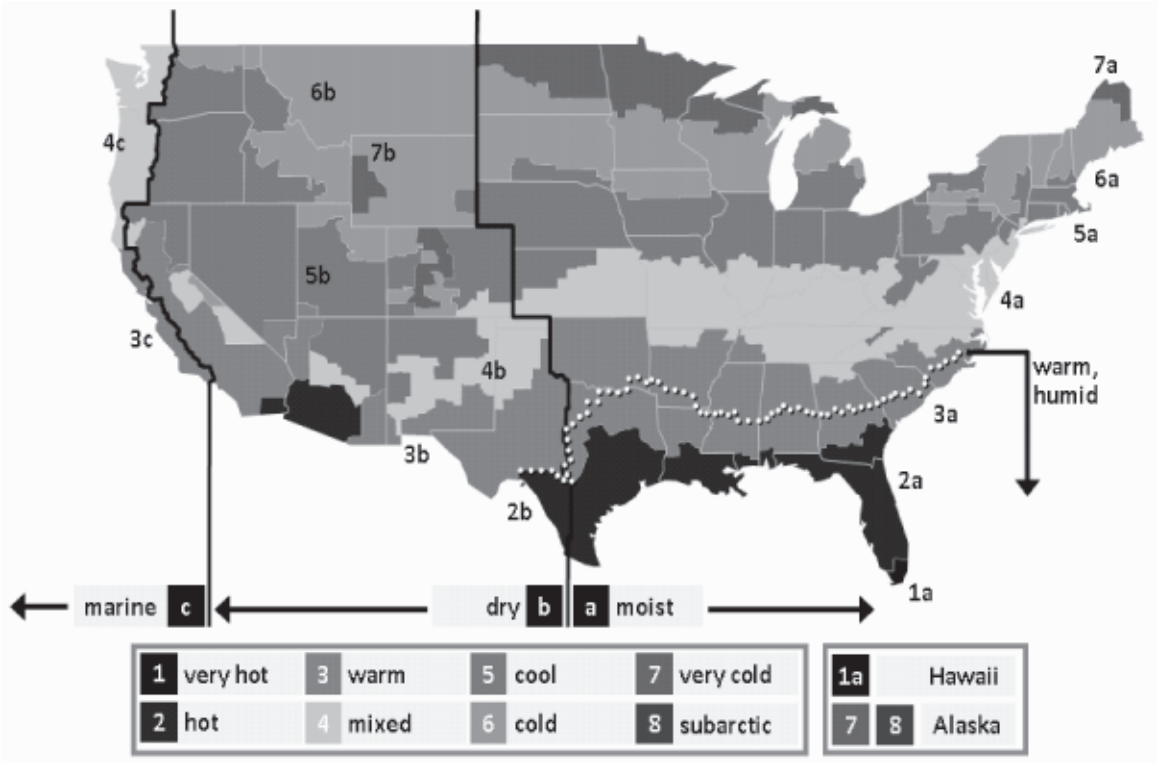

Service and Maintenance

⚠ WARNING

Hazardous Voltage and Exposure to Ultraviolet Radiation!

This product contains components that emit high-intensity ultraviolet (UV-C) radiation which can be harmful to unprotected eyes and skin, and cause serious damage to the equipment.

Failure to disconnect power before servicing could result in burns or electrocution which could result in death or serious injury.

Disconnect all electrical power, including remote disconnects, and make sure the UV lights are off before servicing. Follow proper lockout/tagout procedures to ensure the power cannot be inadvertently energized.

Trane does not recommend field installation of ultraviolet lights in its equipment for the intended purpose of improving indoor air quality. Trane accepts no responsibility for the performance or operation of our equipment in which ultraviolet devices were installed outside of the Trane factory or its approved suppliers.

Table 64. Gas heat high limit cutout

Unit Size	MBh	FC or A/F — Open Value[a]				DDP — Open Value[b]			
		2 Stage & Mod		Ultra Mod		2 Stage & Mod		Ultra Mod	
		DF	HZ	DF	HZ	DF	HZ	DF	HZ
20/25	235	250	250	n/a	n/a	195	n/a	n/a	n/a
	500			160	160	180	n/a	180	n/a
30	350	250	250	n/a	n/a	220	n/a	n/a	n/a
	500			160	160	180	n/a	160	n/a
40	350	250	250	n/a	n/a	280	n/a	n/a	n/a
	850[c]			250	250	220	n/a	195	n/a
50/55	500	250	250	195	195	195	n/a	195	n/a
	850[c]			250	250	220	n/a	260	n/a
60-75	500	250	250	220	220	195	260	220	220
	850[c]			195	195	220	195	220	220
90-130	1000	210	n/a	210	n/a	n/a	n/a	n/a	n/a

[a] FC and A/F units have automatic reset high limit cutouts.
[b] DDP units have manual reset high limit cutouts.
[c] MBH listed are for downflow. For Horizontal MBH, refer to gas heat rating plate.

Compressor Circuit Breakers

Every fixed speed compressor is protected by a circuit breaker. If replacement is necessary, please refer to the circuit breaker nameplate to identify the part number and manufacturer. Contact the circuit breaker manufacturer to locate the datasheet for the circuit breaker to find the "must hold / must trip" values.

Supply and Relief/Return Fan Overloads

When the VFD bypass option is selected, each supply and relief/return fan is protected by a motor overload when in VFD bypass mode. On 60-75T units with dual DDP supply fan motors (with or without VFD bypass option), each supply fan motor is protected by a motor overload in both standard operation and VFD bypass mode. The motor

overloads are factory set to the motor FLA value and should not be adjusted. If the current to the motor exceeds the overload dial setting value, the overload relay auxiliary contacts will trip and interrupt the control signal to the run and bypass contactor coils. This will remove power from the fan motor and stop operation.

Table 65. Filter data

Unit Model (AC/EC)	Panel-Type Filters[a]		Bag-Type Filters[b]		Cartridge Filters (Pre-Evap and Final) (box-type)[b]		Panel-Type Prefilters (Pre-Evap and Final)[c]	
	Qty	Size of each	Qty.	Size of each	Qty. (Pre-Evap/Final Filter)	Size of each	Qty. (Pre-Evap/Final Filter)	Size of each
20 & 25 ton	12	20 X 20 X 2	4	12 X 24 X 19	4/4	12 X 24 X 12	4/4	12 X 24 X 2
			3	24 X 24 X 19	3/3	24 X 24 X 12	3/3	24 X 24 X 2
30 ton	16	20 X 20 X 2	2	12 X 24 X 19	2/1	12 X 24 X 12	2/1	12 X 24 X 2
			6	24 X 24 X 19	6/6	24 X 24 X 12	6/6	24 X 24 X 2
40 ton	16	20 X 25 X 2	5	12 X 24 X 19	5/5	12 X 24 X 12	5/1	12 X 24 X 2
			6	24 X 24 X 19	6/6	24 X 24 X 12	6/6	24 X 24 X 2
50, 55 ton	20	20 X 25 X 2	3	12 X 24 X 19	3/2	12 X 24 X 12	3/2	12 X 24 X 2
			9	24 X 24 X 19	9/9	24 X 24 X 12	9/9	24 X 24 X 2
60, 70 & 75 ton	35	16 X 20 X 2	6	12 X 24 X 19	6/6	12 X 24 X 12	6/6	12 X 24 X 2
			8	24 X 24 X 19	8/8	24 X 24 X 12	8/8	24 X 24 X 2
90-130	25	24 X 24 X 2	3	12 X 24 X 19	3/5	12 X 24 X 12	3/5	20 X 24 X 2
			15	24 X 24 X 19	15/10	24 X 24 X 12	15/10	24 X 24 X 2

[a] Dimensions shown for “Panel-Type Filters” apply to “Throw away”, “Cleanable Wire Mesh”, and “High Efficiency Throw away” Filters.
[b] Units ordered with “Bag-Type Filters” or “Cartridge Filters” (box-type) include a bank of “Panel-Type Prefilters”
[c] The same “Panel-Type Prefilters” are used with “Bag-Type” and “Cartridge (box-type)” filters.

Table 66. “Wet heat” coil fin data

Unit Model(AC/EC)	Coil Type	Coil Rows	Total Coil Face Area (sq. ft.)	Fins per Foot	Fins per Foot
20, 25, 30 ton	WC Prima Flo (hot water)	2	13.75	80	110
40, 50, 55 ton	WC Prima Flo (hot water)	2	19.25	80	110
60, 70, 75 ton	WC Prima Flo (hot water)	2	26.25	80	110
40, 50 ton	NS (steam)	1	13.75 (1) 5.5 (1)	42	96
90-130 ton	NS (steam)	1	17.5 (2)	52	96

Note: To determine unit heating capacity (i.e. “low heat” or “high heat”), see digit 9 of the model number stamped on the unit nameplate.

Table 67. Grease recommendation

Recommended Grease for Fan Bearings	Recommended Operating Range
Exxon Unirex #2	-20 °F to 205 °F
Mobil 532	
Mobil SHC #220	
Texaco Premium RB	

Tonnage	Evaporator Coil			Condenser Coil		
	Size (ft²)	Rows/Fin Series	Tube Diameter / Surface	Size (ft²)	Rows / Fin Series	Type
20 (All), 25 (Std)	20.3	4 / 168	1/2" / Enhanced	58	1 / 252	Microchannel
25 (High & eFlex)					2 / 252	Microchannel
30 (Std)	25.5	5 / 168	3/8" / Enhanced	58	1 / 252	Microchannel
30 (High & eFlex)					2 / 252	Microchannel
40 (All)	32.5	5 / 168	3/8" / Enhanced	116	1 / 252	Microchannel
50, 55 (Std)	38	4/ 168	1/2" / Enhanced	116	1 / 252	Microchannel
50, 55 (High & eFlex)					2 / 252	Microchannel
60, 70 (Std)	43	6 / 168	3/8" / Enhanced	136	1 / 252	Microchannel
60, 70 (High & eFlex), 75 (All)					2 / 252	Microchannel
90 (Std)	59.3	4 / 148	1/2" / Enhanced	152	2 / 276	Microchannel
90 (High)		6 / 148				Microchannel
105 (Std)	59.3	5 / 148	1/2" / Enhanced	152	2 / 276	Microchannel
115, 130 (Std)	59.3	6 / 148	1/2" / Enhanced	152	2 / 276	Microchannel

Fan Belt Adjustment

The supply fan belts must be inspected periodically to assure proper unit operation.

Replacement is necessary if the belts appear frayed or worn. Units with dual belts require a matched set of belts to ensure equal belt length. When installing new belts, do not stretch them over the sheaves; instead, loosen the adjustable motor-mounting base.

Once the new belts are installed, adjust the belt tension using a Browning or Gates tension gauge (or equivalent) illustrated in Figure 110, p. 135.

Figure 110. Typical belt tension gauge

$$\text{Deflection} = \frac{\text{Belt Span}}{64} \text{ (in.)}$$

$$\text{Deflection} = \frac{\text{Belt Span}}{152} \text{ (mm)}$$

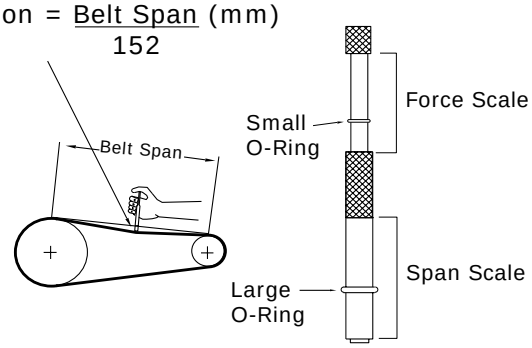

⚠ WARNING

Hazardous Voltage w/Capacitors!

Failure to disconnect power and discharge capacitors before servicing could result in death or serious injury.

Disconnect all electric power, including remote disconnects and discharge all motor start/run capacitors before servicing. Follow proper lockout/tagout procedures to ensure the power cannot be inadvertently energized. For variable frequency drives or other energy storing components provided by Trane or others, refer to the appropriate manufacturer's literature for allowable waiting periods for discharge of capacitors. Verify with a CAT III or IV voltmeter rated per NFPA 70E that all capacitors have discharged.

1. To determine the appropriate belt deflection:
   a. Measure the center-to-center distance, in inches, between the fan sheave and the motor sheave.
   b. Divide the distance measured in Step 1a by 64; the resulting value represents the amount of belt deflection for the proper belt tension.
2. Set the large O-ring on the belt tension gauge at the deflection value determined in Step 1b.
3. Set the small O-ring at zero on the force scale of the gauge.
4. Place the large end of the gauge on the belt at the center of the belt span. Depress the gauge plunger until the large O-ring is even with the of the second belt or even with a straightedge placed across the sheaves.
5. Remove the tension gauge from the belt. Notice that

the small O-ring now indicates a value other than zero on the force scale. This value represents the force (in pounds) required to deflect the belt(s) the proper distance when properly adjusted.

6. Compare the force scale reading in step 5 with the appropriate “force” value in Table 68, p. 136. If the force reading is outside of the listed range for the type of belts used, either readjust the belt tension or contact a qualified service representative.

Note: *The actual belt deflection force must not exceed the maximum value shown in Table 68, p. 136 .*

7. Recheck the new belt's tension at least twice during the first 2 to 3 days of operation. Readjust the belt tension as necessary to correct for any stretching that may have occurred. Until the new belts are “run in”, the belt tension will decrease rapidly as they stretch.

Table 68. Belt tension measurements and deflection forces

Tons	Motor	RPM	Fan Sheave (a) (b) (c)		Fan Bushing		Motor Sheave (d)		Motor Bushing (e)		Belt
			Browning	SST	Browning	SST	Browning	SST	Browning	SST	
27.5, 30, and 35	7.5 hp	550	BK190 X 1 7/16	BK190-1-7/16			BK62H	BK62H	H 1-3/8	H-1-3/8	BX108 Notched
		600	BK160 X 1 7/16	BK160-1-7/16			BK57H	BK57H	H 1-3/8	H-1-3/8	BX100 Notched
		650	BK160 X 1 7/16	BK160-1-7/16			BK62H	BK62H	H 1-3/8	H-1-3/8	BX103 Notched
27.5, 30, and 35	10 hp	650	BK190 X 1 7/16	BK160-1-7/16			BK75H	BK75H	H 1-3/8	H-1-3/8	BX108 Notched
		700	BK160 X 1 7/16	BK160-1-7/16			BK67H	BK67H	H 1-3/8	H-1-3/8	BX103 Notched
		750	BK160 X 1 7/16	BK160-1-7/16			BK72H	BK72H	H 1-3/8	H-1-3/8	BX103 Notched
		800	BK160 X 1 7/16	BK160-1-7/16			BK75H	BK75H	H 1-3/8	H-1-3/8	BX103 Notched
27.5, 30, and 35	15 hp	700	1B5V160	1B160SK	B 1 7/16	SK 1 7/16	1B5V64	1B64SDS	B 1 5/8	SDS 1 5/8	BX103 Notched
		750	BK160 X 1 7/16	BK160-1-7/16			1B5V66	1B66SDS	B 1 5/8	SDS 1 5/8	BX103 Notched
		800	BK160 X 1 7/16	BK160-1-7/16			1B5V70	1B70SDS	B 1 5/8	SDS 1 5/8	BX103 Notched
		850	2B5V124	2B124SK	B 1 7/16	SK 1 7/16	2B5V58	2B58SDS	B 1 5/8	SDS 1 5/8	BX95 Notched
		900	2B5V124	2B124SK	B 1 7/16	SK 1 7/16	2B5V62	2B62SDS	B 1 5/8	SDS 1 5/8	BX95 Notched
35	20 hp	850	2B5V124	2B124SK	B 1 7/16	SK 1 7/16	2B5V58	2B58SDS	B 1 5/8	SDS 1 5/8	BX95 Notched
		900	2B5V124	2B124SK	B 1 7/16	SK 1 7/16	2B5V62	2B62SDS	B 1 5/8	SDS 1 5/8	BX95 Notched
40	10 hp	500	2B5V124	2B124SK	B 1 11/16	SK 1 7/16	2BK36H	2BK36H	H 1-3/8	H-1-3/8	BX95 Notched
		525	2B5V124	2B124SK	B 1 11/16	SK 1 7/16	2BK40H	2BK40H	H 1-3/8	H-1-3/8	BX95 Notched
		575	2B5V124	2B124SK	B 1 11/16	SK 1 7/16	2BK45H	2BK45H	H 1-3/8	H-1-3/8	BX95 Notched
	15 hp	625	2B5V124	2B124SK	B 1 11/16	SK 1 7/16	2B5V42	2B42SH	P1 1-5/8	SH 1 5/8	BX95 Notched
		675	2B5V136	2B136SK	B 1 11/16	SK 1 7/16	2B5V50	2B50SDS	B 1 5/8	SDS 1 5/8	BX97 Notched
		725	2B5V136	2B136SK	B 1 11/16	SK 1 7/16	2B5V54	2B54SDS	B 1 5/8	SDS 1 5/8	BX97 Notched
	20 hp	725	2B5V136	2B136SK	B 1 11/16	SK 1 7/16	2B5V54	2B54SDS	B 1 5/8	SDS 1 5/8	BX97 Notched
		775	2B5V136	2B136SK	B 1 11/16	SK 1 7/16	2B5V58	2B58SDS	B 1 5/8	SDS 1 5/8	BX97 Notched
		800	2B5V136	2B136SK	B 1 11/16	SK 1 7/16	2B5V60	2B60SDS	B 1 5/8	SDS 1 5/8	BX97 Notched

Table 68. Belt tension measurements and deflection forces (continued)

Tons	Motor	RPM	Fan Sheave [a] [b] [c]		Fan Bushing		Motor Sheave [d]		Motor Bushing [e]		Belt
			Browning	SST	Browning	SST	Browning	SST	Browning	SST	
50	10 hp	525	2B5V124	2B124SK	B 1 11/16	SK 1 7/16	2BK40H	2BK40H	H 1-3/8	H-1-3/8	BX95 Notched
		575	2B5V124	2B124SK	B 1 11/16	SK 1 7/16	2BK45H	2BK45H	H 1-3/8	H-1-3/8	BX95 Notched
	15 hp	625	2B5V124	2B124SK	B 1 11/16	SK 1 7/16	2B5V42	2B42SH	P1 1-5/8	SH 1 5/8	BX95 Notched
		675	2B5V136	2B136SK	B 1 11/16	SK 1 7/16	2B5V50	2B50SDS	B 1 5/8	SDS 1 5/8	BX97 Notched
	20 hp	725	2B5V136	2B136SK	B 1 11/16	SK 1 7/16	2B5V54	2B54SDS	B 1 5/8	SDS 1 5/8	BX97 Notched
		775	2B5V136	2B136SK	B 1 11/16	SK 1 7/16	2B5V58	2B58SDS	B 1 5/8	SDS 1 5/8	BX97 Notched
	25 hp	725	2B5V160	2B160SK	B 1 11/16	SK 1 7/16	2B5V64	2B64SDS	B 1 7/8	SDS 1 7/8	BX103 Notched
		775	2B5V154	2B154SK	B 1 11/16	SK 1 7/16	2B5V66	2B66SDS	B 1 7/8	SDS 1 7/8	BX103 Notched
		825	2B5V154	2B154SK	B 1 11/16	SK 1 7/16	2B5V70	2B70SK	B 1 7/8	SK 1 7/8	BX103 Notched

[a] Browning BK160 X 1 7/16 and SST BK160-1-7/16 sheaves are interchangeable.

[b] Browning BK190 X 1 7/16 and SST BK190-1-7/16 sheaves are interchangeable.

[c] All other sheaves & bushings are interchangeable only in sheave/bushing combination sets. Sets do not mix vendors.

[d] Browning and SST sheaves with identical numbers are interchangeable and can be used with each other's bushings.

[e] Browning H 1-3/8 and SST H-1-3/8 bushings are interchangeable and can be used with each other's sheaves.

Scroll Compressor Replacement

The compressor manifold system was purposely designed to provide proper oil return to each compressor. The refrigerant manifold system must not be modified in any way.

Note: *Altering the compressor manifold piping may cause oil return problems and compressor failure.*

Should a compressor replacement become necessary and a suction line filter drier is to be installed, install it a minimum of 16 or 25 inches upstream of the oil separator tee. See Figure 111, p. 137.

Important: *Do Not release refrigerant to the atmosphere! If adding or removing refrigerant is required, the service technician must comply with all Federal, State and local laws. Refer to general service bulletin MSCU-SB-1 (latest edition).*

Figure 111. Suction line filter/drier installation

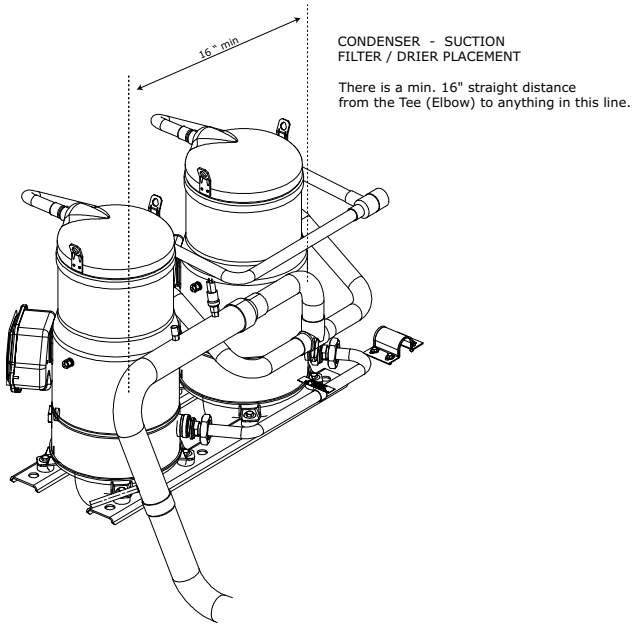

Refrigeration System

⚠ WARNING

R-410A Refrigerant under Higher Pressure than R-22!

Failure to use proper equipment or components as described below, could result in equipment failing and possibly exploding, which could result in death, serious injury, or equipment damage.

The units described in this manual use R-410A refrigerant which operates at higher pressures than R-22. Use ONLY R-410A rated service equipment or components with these units. For specific handling concerns with R-410A, please contact your local Trane representative.

⚠ WARNING

Refrigerant under High Pressure!

Failure to follow instructions below could result in an explosion which could result in death or serious injury or equipment damage.

System contains refrigerant under high pressure. Recover refrigerant to relieve pressure before opening the system. See unit nameplate for refrigerant type. Do not use non-approved refrigerants, refrigerant substitutes, or refrigerant additives.

Refrigerant Evacuation and Charging

NOTICE

Compressor Damage!

Failure to follow instructions below result in permanent damage to the compressor.

The unit is fully charged with R-410A refrigerant from the factory. However, if it becomes necessary to remove or recharge the system with refrigerant, it is important that the following actions are taken.

The recommended method for evacuation and dehydration is to evacuate both the high side and the low side to 500 microns or less. To establish that the unit is leak-free, use a standing vacuum test. The maximum allowable rise over a 15 minute period is 200 microns. If the rise exceeds this, there is either still moisture in the system or a leak is present.

Important: *Do Not release refrigerant to the atmosphere! If adding or removing refrigerant is required, the service technician must comply with all federal, state, and local laws.*

- *To prevent cross contamination of refrigerants and oils, use only dedicated R-410A service equipment.*
- *Disconnect unit power before evacuation and do not apply voltage to compressor while under vacuum. Failure to follow these instructions will result in compressor failure.*
- *Due to the presence of POE oil, minimize system open time. Do not exceed 1 hour.*
- *When recharging R-410A refrigerant, it should be charged in the liquid state.*
- *The compressor should be off when the initial refrigerant recharge is performed.*
- *Charging to the liquid line is required prior to starting the compressor to minimize the potential damage to the compressor due to refrigerant in the compressor oil sump at startup.*
- *If suction line charging is needed to complete the charging process, only do so with the compressor operating. Do not charge liquid refrigerant into the suction line with the compressor off! This increases both the probability that the compressor will start with refrigerant in the compressor oil sump and the potential for compressor damage.*
- *Allow the crankcase heater to operate a minimum of 8 hours before starting the unit.*

Charge Storage

Due to the reduced capacity of the microchannel condenser coil compared to the round tube plate fin evaporator coil, pumping refrigerant into the condenser coil to service the refrigerant system is no longer an option.

Compressor Oil

Refer to for the appropriate scroll compressor oil charge. Remove and measure oil from any compressor replaced. Adjust oil in replacement compressor to prevent excessive oil in system. Anytime a compressor is replaced, the oil for each compressor within the manifold must be replaced.

The scroll compressor uses Trane OIL00079 (one quart container) or OIL00080 (one gallon container) without substitution. Discoloration of the oil indicates that an abnormal condition has occurred. If the oil is dark and smells burnt, it has overheated because of the following:

- Compressor operating at extremely high condensing temperatures
- High superheat

- A compressor mechanical failure
- Occurrence of a motor burnout.

If a motor burnout is suspected, use an acid test kit (KIT15496) to check the condition of the oil. Test results will indicate an acid level has exceeded the limit if a burnout occurred. Oil test kits must be used for POE oil (OIL00079 for a quart container or OIL00080 for a gallon container) to determine whether the oil is acidic. If a motor burnout has occurred, change the oil in both compressors in a tandem set.

CSHD and CSHN Compressors

CSHD and CSHN compressors have an oil drain valve which allows the oil to be drained out of the compressor. After the refrigerant has been recovered, pressurize the system with nitrogen to help remove the oil from the compressor.

Charge the new oil into the Schrader valve or oil drain valve on the shell of the compressor. Due to the moisture absorption properties of POE oil, do not use POE oil from a previously opened container. Also discard any excess oil from the container that is not used.

Figure 112. PTFE gasket

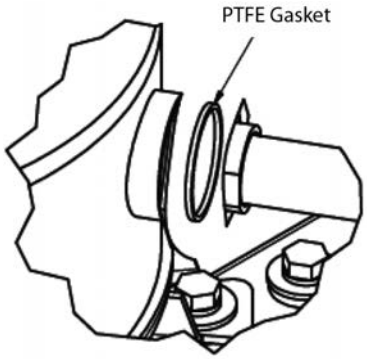

Figure 113. CSHD compressor

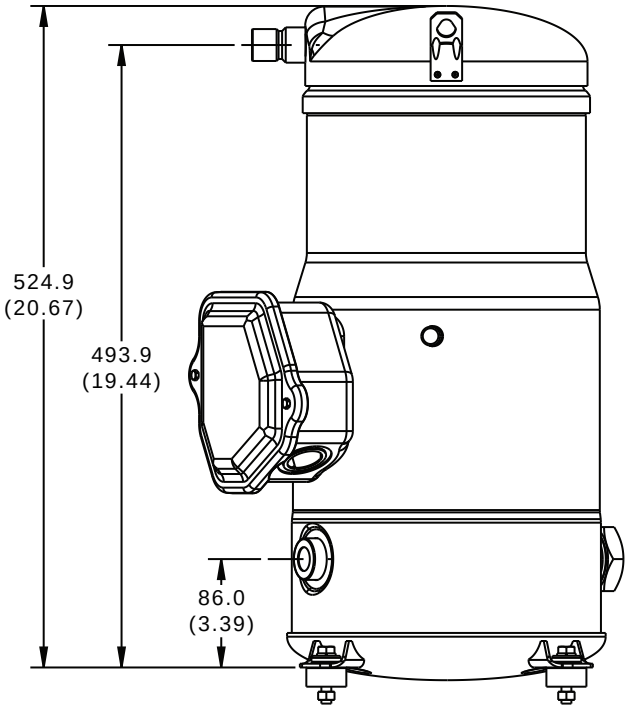

Figure 114. CSHN

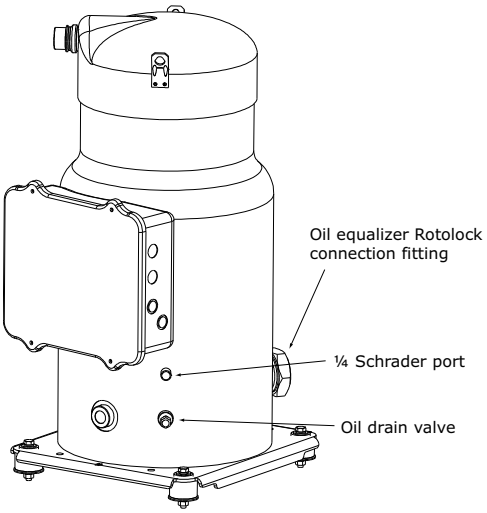

VZH Variable Speed Compressors

For oil removal and re-charging on VZH088* and VZH117* compressors, this will require that the oil be removed using a suction or pump device through the oil equalizer Rotolock fitting. Use a dedicated device for removing oil. It is good practice to flush the suction device with clean oil prior to use.

Place a catch pan under the oil equalizer Rotolock connection fitting on the compressor to catch the oil that will come out of the compressor when the oil equalizer tube is removed from the compressor.

ZPS 2-Stage Compressors

For 20 and 25 ton systems which use 2-stage unloading scrolls, please follow the same oil removal procedure for VZH088 and VZH117 compressors described in the section above.

For adding oil to these manifold sets, an oil refill port is located on the oil equalizer line, as shown in the figure below.

Figure 115. ZPS 2–stage compressor

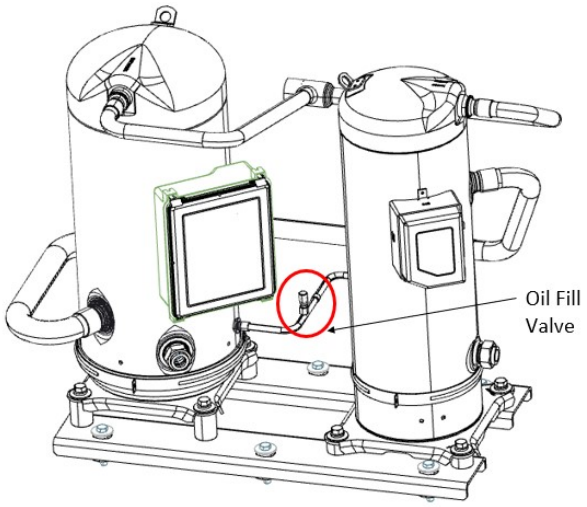

Prior to reinstalling the oil equalizer line to each compressor, replace the PTFE gasket on the oil equalizer Rotolock fitting on each compressor. See (Fig. 141). Torque Rotolock nut to the values listed in (Table 86).

Charge the new oil into the Schrader valve on the shell of the compressor. Due to the moisture absorption properties of POE oil, do not use POE oil from a previously opened container. Also discard any excess oil from the container that is not used.

For oil removal and re-charging on VZH170* compressors, follow the same procedure described in “CSHD and CSHN Compressors,” p. 139

VZH variable speed compressors include the addition of an oil injection solenoid valve (2QM18) to provide supplemental oil flow from an internal gear pump to the scroll thrust bearing surface. The solenoid is de-energized at low compressor speeds to allow supplemental oil flow and ensure thrust surface lubrication. The solenoid is energized at high compressor speeds to stop supplemental lubrication. This prevents excessive oil circulation to the system. The solenoid is controlled by the inverter and switches at 3900 RPM for the VZH088, 3300 RPM for the VZH117, and 2700 RPM for the VZH170.

The 115 VAC solenoid coil operation can be checked on one of the solenoid leads with a clamp on amp meter. Above 3900 RPM (VZH088) /3300 RPM (VZH117) /2700 RPM (VZH170), the amp meter should read about 0.5 amps to indicate supplemental flow has been stopped.

Figure 116. Oil injection solenoid valve

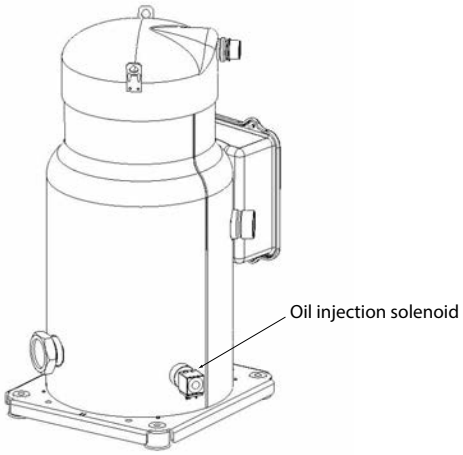

Table 69. Oil charge per compressor

Compressor	Pints
CSHD103	5.0
ZPS122, ZP104	5.3
ZP154-182	7.1
CSHD075-092	6.3
CSHD105-161, VZH088	7.0
CSHD175-183, VZH117	7.6
CSHN176-315, VZH170	14.2
CSHN374	15.2

Table 70. Torque requirements for rotolock fittings

CSHD*, VZH088, and VZH117	64 +/- 12 ft-lbs
CSHN* and VZH170	100 +/- 10 ft-lbs

Note: *Always replace gasket when reassembling oil equalizer lines.*

Electrical Phasing

If it becomes necessary to replace a compressor, it is very important to review and follow the Electrical Phasing procedure described in the startup procedure of the IOM.

If the compressors are allowed to run backward for even a very short period of time, internal compressor damage may occur and compressor life may be reduced. If allowed to run backwards for an extended period of time the motor windings can overheat and cause the motor winding thermostats to open. This will cause a “compressor trip” diagnostic and stop the compressor

If a scroll compressor is rotating backwards, it will not pump and a loud rattling sound can be observed. Check the electrical phasing at the compressor terminal box. If the phasing is correct, before condemning the compressor,

interchange any two leads to check the internal motor phasing.

75 Ton eFlex™ Variable Speed Tandem

The 75 Ton eFlex™ variable speed compressor is manifolded with a CSHN fixed speed compressor. It uses a patented manifold design that is different from fixed speed tandems as follows:

1. The variable speed compressor is always first on and located upstream in the suction line in position 1B;
2. A nozzle in the suction tee, directly upstream of the manifold set, separates suction oil return to the upstream variable speed compressor. It also provides a sump pressure difference to move excess oil from the variable speed to the fixed speed compressor when both compressors are running. The nozzle is specifically sized for this variable speed manifold compressor combination and must not be removed.

   Suction restrictors are not used, and a smaller 3/8" OD oil equalizer line is used to help maintain the sump pressure differential.

Figure 117. eFlex variable speed tandem

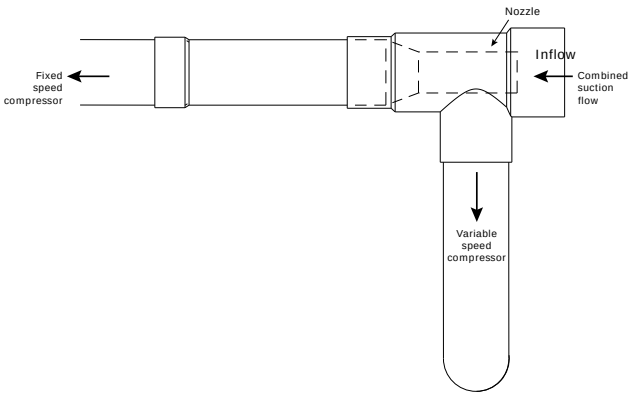

Precision Suction Restrictor

Tandem manifold compressors that have unequal capacity sizes use a precision suction restrictor to balance the oil levels in the compressors (see figure below). This restrictor is placed in the smaller capacity compressor. When replacing this compressor, it is imperative that the proper restrictor is selected from those provided with the replacement compressor.

When the compressors are restarted, verify that correct oil levels are obtained with both compressors operating.

Figure 118. Precision suction restrictor

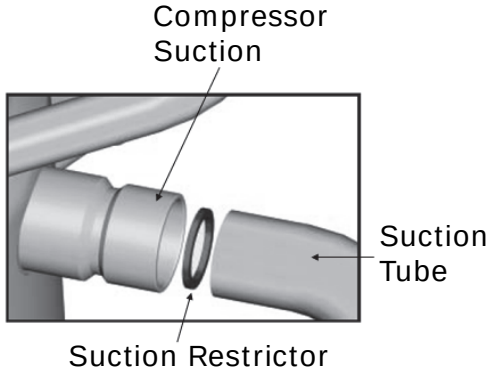

VFD Programming Parameters (Supply/ Relief)

⚠ WARNING

Hazardous Voltage w/Capacitors!

Failure to disconnect power and discharge capacitors before servicing could result in death or serious injury.

Disconnect all electric power, including remote disconnects and discharge all motor start/run capacitors before servicing. Follow proper lockout/ tagout procedures to ensure the power cannot be inadvertently energized. For variable frequency drives or other energy storing components provided by Trane or others, refer to the appropriate manufacturer's literature for allowable waiting periods for discharge of capacitors. Verify with a CAT III or IV voltmeter rated per NFPA 70E that all capacitors have discharged.

Units shipped with an optional variable frequency drive (VFD) are preset and run tested at the factory. If a problem with a VFD occurs, ensure that the programmed parameters listed in have been set before replacing the drive.

Verify Parameters

Verify parameter 1-23 is set to 60 Hz (or 50 Hz where applicable) and that parameter 0-06 is set to the correct supply voltage/frequency range.

1. To check parameter 1-23 press the Main Menu button twice (if TR150 drive) (press the Back button if the main menu does not display)
2. Scroll down to Load & Motor, press OK
3. Select 1-2, press OK
4. Press down until parameter 1-23 is displayed. Parameter 1-23 can then be modified by pressing OK and pressing the Up and Down buttons.
5. When the desired selection has been made, press OK .

Should replacing the VFD become necessary, the replacement is not configured with all of Trane's operating

parameters. The VFD must be programmed before attempting to operate the unit.

To verify and/or program a VFD, use the following steps:

1. At the unit, turn the 115 volt control circuit switch 1S70 to the Off position.
2. Turn the 24 volt control circuit switch to the Off position.

⚠ WARNING

Hazardous Voltage w/Capacitors!

Failure to disconnect power and discharge capacitors before servicing could result in death or serious injury.

Disconnect all electric power, including remote disconnects and discharge all motor start/run capacitors before servicing. Follow proper lockout/tagout procedures to ensure the power cannot be inadvertently energized. For variable frequency drives or other energy storing components provided by Trane or others, refer to the appropriate manufacturer's literature for allowable waiting periods for discharge of capacitors. Verify with a CAT III or IV voltmeter rated per NFPA 70E that all capacitors have discharged.

Important: *HIGH VOLTAGE IS PRESENT AT TERMINAL BLOCK 1TB1 OR UNIT DISCONNECT SWITCH 1S14.*

3. To modify parameters:
   a. Press Main Menu twice (if TR150 drive) (press Back if the main menu does not display)
   b. Use the Up and Down buttons to find the parameter menu group (first part of parameter number)
   c. Press OK
   d. Use the Up and Down buttons to select the correct parameter sub-group (first digit of second part of parameter number)
   e. Press OK
   f. Use the Up and Down buttons to select the specific parameter
   g. Press OK
   h. To move to a different digit within a parameter setting, use the Left and Right buttons (Highlighted area indicates digit selected for change)
   i. Use the Up and Down buttons to adjust the digit
   j. Press Cancel to disregard change, or press OK to accept change and enter the new setting
4. Repeat Step 3 for each menu selection setting in .
5. To reset all programming parameters back to the factory defaults:
   a. Go to parameter 14-22 Operation Mode
   b. Press OK
   c. Select Initialization
   d. Press OK
   e. Cut off the mains supply and wait until the display turns off.
   f. Reconnect the mains supply - the frequency converter is now reset.
   g. Ensure parameter 14-22 Operation Mode has reverted back to "Normal Operation".

   Notes:

   - *Item 5 resets the drive to the default factory settings. The program parameters listed in will need to be verified or changed as described in Items 3 and 4.*
   - *Some of the parameters listed in the table are motor specific. Due to various motors and efficiencies available, use only the values stamped on the specific motor nameplate. Do not use the Unit nameplate values.*
   - *A backup copy of the current setup may be saved to the LCP before changing parameters or resetting the drive using parameter 0-50 LCP Copy (All to LCP to save all parameters to keypad and All from LCP to download all parameters into drive/replacement drive).. See LCP Copy in the VFD Operating Instructions for details.*
6. Follow the start-up procedures for supply fan in the "Variable Air Volume System" section or the "Relief Airflow Measurement" start-up procedures for the relief fan.
7. After verifying that the VFD(s) are operating properly, press the STOP key to stop the unit operation.
8. Follow the applicable steps in the "Final Unit Checkout" section to return the unit to its normal operating mode.

If a problem with a VFD occurs, ensure that the programmed parameters listed for supply and relief VFD have been set before replacing the drive.

Note: *Follow listed sequence when updating VFD parameters.*

Table 71. Supply fan VFD programming parameters

Menu	ID	Description	Parameter Setting
Operation Display	0-01	Language	[0] English US
	0-03	Regional Settings	[1] North American
	0-06	Grid Type	Set to applicable unit power supply [102] 200-240V/60HZ for 208, and 230V/60HZ units [122] 440-480V/60Hz for 460V/60Hz units [132] 525-600V/60Hz for 575V/60Hz units [12] 380-440V/50Hz for 380, and 415V/50Hz supply For IT Grid (no ground connections) or Corner grounded Delta power supply systems, the applicable voltage/Hz and IT-Grid or Delta should be selected.
	0-40	[Hand on] - Key on LCP	[0] Disabled
Load and Motor	1-20	Motor Power [HP]	Per Motor Nameplate HP
	1-22	Motor Voltage (V)	Per Motor Nameplate Voltage
	1-23	Motor Frequency (HZ)	Per Motor Nameplate Frequency
	1-24	Motor Current (A)	Per Motor Nameplate FLA
	1-25	Motor Nominal Speed (RPM)	Per Motor Nameplate Rated Speed
	1-73	Flying Start	[1] Enabled
	1-90	Motor Thermal Protection	[4] ETR Trip1
Brakes	2-00	DC Hold / Preheat Current (%)	[0] 0%
	2-01	DC Brake Current (%)	[0] 0%
	2-04	DC Brake Cut In Speed (HZ)	[10] 10Hz
Reference / Ramps	3-02	Minimum Reference (HZ)	Per Unit Nameplate - Evap Fan VFD Min Hz
	3-03	Maximun Reference (HZ)	Per Unit Nameplate - Evap Fan VFD Max Hz
	3-15	Reference 1 Source	[11] Local bus reference
	3-16	Reference 2 Source	[0] No function
	3-17	Reference 3 Source	[0] No function
	3-41	Ramp 1 Ramp Up Time (S)	[30] 30s
	3-42	Ramp 1 Ramp Down Time (S)	[30] 30s
Limits / Warnings	4-12	Motor Speed Low Limit [HZ]	[22] 22 Hz for FC fans (Digit 14=1, 2, 3, 4, 5, 6, 7, 8, 9, A) [15] 15 Hz for DDP Fan (Digit 14=B through Z)
	4-14	Motor Speed High Limit (Hz)	See Table 1 below for value
	4-18	Current Limit (%)	[100] 100%
	4-19	Max Output Frequency (HZ)	[60] 60 Hz for FC Fan (Digit 14= 1, 2, 3, 4, 5, 6, 7, 8, 9, A) [120] 120 Hz for DDP Fan (Digit=14 B through Z)

Table 71. Supply fan VFD programming parameters (continued)

Menu	ID	Description	Parameter Setting
Digital In / Out	5-10	Terminal 18 Digital Input	[0] No Operation
	5-12	Terminal 27 Digital Input	[0] No Operation for FC, single or dual DDP Units w/ Bypass (Digit 17=7, 9, B, D) [2] Coast Inverse for dual DDP Units w/o Bypass (Digit 14= H, J, K, L, M, N, T, V, W, X, Y, Z, & Digit 17= 6, 8, A, C)
	5-13	Terminal 29 Digital Input	[0] No Operation
Communica-tions and Options	8-30	Protocol	[2] Modbus RTU
	8-31	Address	Set address per unit component location diagram [7] for 6TB1 [8] for 6TB2
	8-32	Baud Rate	[7] 115200 Baud
	8-33	Parity / Stop Bits	[0] Even Parity, 1 Stop Bits
	8-35	Minimum Response Delay (s)	[0.005] 5ms Min Response Delay Time
	8-36	Maximum Response Delay (s)	[0.1] 100ms Max Response Delay Time
	8-01	Control Site	[0] Ctl. Word and digital for Dual DDP Units w/o Bypass (Digit 14= H, J, K, L, M,N, T, V, W, X, Y, Z & Digit 17= 6, 8, A, C) [2] Controlword onlly for FC, Single, or Dual DDP Units w/ Bypass
	8-03	Control Timeout Time (s)	[15] 15s
	8-04	Control Timeout Function	[2] Stop
Special Function	14-01	Switching Frequency (kHz)	[5] 5.0 KHz
	14-11	Mains Voltage Fault level	Set based on motor nameplate voltage [177] for 208V motor [196] for 230V motor [323] for 380V motor [353] for 415V motor [391] for 460V motor [489] for 575V motor
	14-12	Function at Main Imbalance	[3] Derate
	14-20	Reset Mode	[5] Automatic reset x 5
	14-50	RFI Filter	[0] Off
	14-61	Function at Inverter Overload	[1] Derate
Application Functions	22-60	Broken Belt Function	[2] Trip for FC Fans (Digit 14=1, 2, 3, 4, 5, 6, 7, 8, 9, A) [0] Disabled for DDP Fans (Digit 14=B through Z)
	22-61	Broken Belt Torque (%)	[10] 10%
	22-62	Broken Belt Delay (s)	[60] 60 Seconds

Table 72. Value for parameter 4–14 (Motor Speed High Limit)

DDP Fans - (Digit # 14 = B thru H, J thru N, P, R, T thru Z)				
Digit # 5,6,7 (Unit Tonnage)	Digit # 2 = A, X		Digit # 2 = F	
	(4 Pole)	(6 Pole)	(4 Pole)	(6 Pole)
20,25	81	83	75	83
30	75		67	
40	67		61	
50-55	61		61	
60	75		61	
70-75	67		61	
FC Fans - (Digit #14= 1 thru 9, A)				
20 - 75	60			
FC Fans - (Digit #14= C thru G)				
90 - 130	60			

Table 73. Relief/return fan VFD parameters

Menu	ID	Description	Parameter Setting
Operation Display	0-01	Language	[0] English US
	0-03	Regional Settings	[1] North American
	0-06	Grid Type	Set to applicable unit power supply [102] 200-240V/60Hz for 208 & 230V/60Hz units [122] 440-480V/60Hz for 460V/60Hz units [132] 525-600V/60Hz for 575V/60Hz units [12] 380-440v/50Hz for 380 & 415V/50Hz supply For IT Grid (no ground connections) or Corner grounded Delta power supply systems, the applicable voltage/Hz and IT-Grid or Delta should be selected.
	0-40	[Hand on] - Key on LCP	[0] Disabled
Load and Motor	1-20	Motor Power (KW/HP)	Per Motor Nameplate HP - KW
	1-22	Motor Voltage (V)	Per Motor Nameplate Voltage
	1-23	Motor Frequency (HZ)	Per Motor Nameplate Frequency
	1-24	Motor Current (A)	Per Motor Nameplate FLA
	1-25	Motor Nominal Speed (RPM)	Per Motor Nameplate Rated Speed
	1-73	Flying Start	[1] Enabled
	1-90	Motor Thermal Protection	[4] ETR Trip1
Brakes	2-00	DC Hold / Preheat Current (%)	[0] 0%
	2-01	DC Brake Current (%)	[0] 0%
	2-04	DC Brake Cut In Speed	[10] 10 Hz

Table 73. Relief/return fan VFD parameters (continued)

Menu	ID	Description	Parameter Setting
Reference / Ramps	3-02	Minimum Reference (HZ)	[22] 22 Hz
	3-03	Maximum Reference (HZ)	[60] 60 Hz
	3-15	Reference 1 Source	[11] Local bus reference
	3-16	Reference 2 Source	[0] No function
	3-17	Reference 3 Source	[0] No function
	3-41	Ramp 1 Ramp up Time (S)	[30] 30s
	3-42	Ramp 1 Ramp down Time (S)	[30] 30s
Limits / Warnings	4-10	Motor Speed Direction	[0] Clockwise
	4-12	Motor Speed Low Limit [HZ]	[22] 22 Hz
	4-14	Motor Speed High Limit (Hz)	[60] 60 Hz
	4-18	Current Limit (%)	[100] 100%
	4-19	Max Output Frequency (Hz)	[60] 60 Hz
Digital In / Out	5-10	Terminal 18 Digital Input	[0] No Operation
	5-12	Terminal 27 Digital Input	[0] No Operation
	5-13	Terminal 29 Digital Input	[0] No Operation
Communications and Operations	8-30	Protocol	[2] Modbus RTU
	8-31	Address	[9] = 20T-75T & Unit Model Digit 11= 3, 4, 5, 6, 7, 8 [12] = 20T-75T & Unit Model Digit 11= 9, M, N, P, R, T [9] = 90T-130T
	8-32	Baud Rate	[7] 115200 Baud
	8-33	Parity / Stop Bits	[0] Even Parity,1 Stop Bits
	8-35	Minimum Response Delay (s)	[0.005] 5ms Min Response Delay Time
	8-36	Maximum Response Delay (s)	[0.1] 100ms Max Response Delay Time
	8-01	Control Site	[2] Controlword only
	8-03	Control Timeout Time (s)	[15] 15s
	8-04	Control Timeout Function	[2] Stop

Table 73. Relief/return fan VFD parameters (continued)

Menu	ID	Description	Parameter Setting
Special Function	14-01	Switching Frequency (kHz)	[5] 5.0 kHz
	14-11	Mains Voltage Fault level (V)	Set based on motor nameplate voltage [177] for 208V motor [196] for 230V motor [323] for 380V motor [353] for 415V motor [391] for 460V motor [489] for 575V motor
	14-12	Function at Main Imbalance	[3] Derate
	14-20	Reset Mode	[3] Automatic reset x 3
	14-50	RFI Filter	[0] Off
	14-61	Function at Inverter Overload	[1] Derate
Application Functions	22-60	Broken Belt Function	[2] Trip
	22-61	Broken Belt Torque (%)	[10] 10%
	22-62	Broken Belt Delay (s)	[60] 60 Seconds

Note: *Follow listed sequence when updating VFD parameters*

Table 74. Condenser fan VFD parameters

Menu	ID	Descriptions	Parameter Setting
Operation display	0-01	Language	[0] English US
	0-03	Regional Settings	[1] North American
	0-06	Grid Type	Set to applicable unit power supply [122] 440-480V/60Hz for 460V/60Hz units [132] 525-600V/60Hz for 575V/60Hz units For IT Grid (no ground connections) or Corner grounded Delta power supply systems, the applicable voltage/Hz and IT-Grid or Delta should be selected.
	0-40	[Hand on] - Key on LCP	[0] Disabled
Load and motor	1-20	Motor Power (KW/HP)	Per Motor Nameplate KW- HP
	1-22	Motor Voltage (V)	Per Motor Nameplate Voltage
	1-23	Motor Frequency (HZ)	Per Motor Nameplate Frequency
	1-24	Motor Current (A)	Per Motor Nameplate FLA
	1-25	Motor Nominal Speed (RPM)	Per Motor Nameplate RPM
	1-73	Flying Start	[1] Enabled
	1-90	Motor Thermal Protection	[4] ETR Trip1
Brakes	2-00	DC Hold / Preheat Current (%)	[0] 0%
	2-01	DC Brake Current (%)	[0] 0%
	2-04	DC Brake Cut in Speed	[10] 10 Hz

Table 74. Condenser fan VFD parameters (continued)

Menu	ID	Descriptions	Parameter Setting
Reference / Ramps	3-02	Minimum Reference (HZ)	[6] 6Hz
	3-03	Maximum Reference (HZ)	[60] 60Hz
	3-15	Reference 1 Source	[11] Local bus reference
	3-16	Reference 2 Source	[0] No function
	3-17	Reference 3 Source	[0] No function
	3-41	Ramp 1 Ramp up Time (S)	[10] 10s
	3-42	Ramp 1 Ramp down Time (S)	[10] 10s
Limits / Warnings	4-12	Motor Speed Low Limit [HZ]	[6] 6Hz
	4-14	Motor Speed High Limit (Hz)	[60] 60Hz
	4-18	Current Limit (%)	[100] 100% for 1HP Motor
	4-19	Max Output Frequency (Hz)	[60] 60Hz
Digital	5-10	Terminal 18 Digital Input	[0] No Operation
	5-12	Terminal 27 Digital Input	[0] No Operation
	5-13	Terminal 29 Digital Input	[0] No Operation
Communications and Operations	8-30	Protocol	[2] Modbus RTU
	8-31	Address	Set address per unit component location diagram [5] for 1A (REFDES 2M6) [6] for 2A (REFDES 2M9)
	8-32	Baud Rate	[7] 115200 Baud
	8-33	Parity / Stop Bits	[0] Even Parity,1 Stop Bits
	8-35	Minimum Response Delay (s)	[0.005] 5ms Min Response Delay Time
	8-36	Maximum Response Delay (s)	[0.1] 100ms Max Response Delay Time
	8-01	Control Site	[2] Controlword only
	8-03	Control Timeout Time (s)	[15] 15s
	8-04	Control Timeout Function	[2] Stop
Special Functions	14-01	Switching Frequency (kHz)	[5] 5.0 kHz
	14-11	Mains Voltage Fault level (V)	Set based on motor nameplate voltage [391] for 460V motor [489] for 575V motor
	14-12	Function at Main Imbalance	[3] Derate
	14-20	Reset Mode	[3] Automatic reset x 3
	14-50	RFI Filter	[0] Off
	14-61	Function at Inverter Overload	[1] Derate

eFlex™ Compressor VFD Programming Parameters

⚠ WARNING

Hazardous Voltage w/Capacitors!

Failure to disconnect power and discharge capacitors before servicing could result in death or serious injury.

Disconnect all electric power, including remote disconnects and discharge all motor start/run capacitors before servicing. Follow proper lockout/tagout procedures to ensure the power cannot be inadvertently energized. For variable frequency drives or other energy storing components provided by Trane or others, refer to the appropriate manufacturer's literature for allowable waiting periods for discharge of capacitors. Verify with a CAT III or IV voltmeter rated per NFPA 70E that all capacitors have discharged.

A factory-shipped TRV200 should not be modified in the field. It is specifically matched to the compressor.

Should replacing a VFD become necessary, refer to . All other parameters will be appropriately set in field replacement VFDs. Do not use any other type or brand of VFD when replacing the VFD.

Note: *Failure to set parameter 4-18 Current Limit on a field replacement VFD will not allow the compressor to start and result in A18 Start Failed or A49 Speed Limit on the VFD.*

To verify and/or set parameters in the Compressor VFD:

1. Press **Quick Menu**.
2. Press **My Personal Menu**.
3. Navigate through the options using the **Up** and **Down** arrows to parameter.
4. Adjust the value as shown in .
5. Press [OK].

Note: *Parameter '4-18 Current Limit' for field installed TRV200 drives must be set according to table below for proper operation and to meet overload protection requirements. Replacement drive will not run the compressor until set properly. Factory installed drives are programmed properly for unit operation. Parameter 4-18 is available via the quick menu.*

Table 75. Compressor VFD programming parameter 4-18

Unit Tonnage	Unit Voltage			
	200V	230V	460V	575V
20	90%	82%	84%	82%
25				
30	92%	84%	80%	
40				
50	111%	101%	91%	93%
55				
60	119%	108%	100%	102%
70	135%	122%	115%	116%
75	111%	101%	91%	93%

Monthly Maintenance

⚠ WARNING

Hazardous Voltage w/Capacitors!

Failure to disconnect power and discharge capacitors before servicing could result in death or serious injury.

Disconnect all electric power, including remote disconnects and discharge all motor start/run capacitors before servicing. Follow proper lockout/tagout procedures to ensure the power cannot be inadvertently energized. For variable frequency drives or other energy storing components provided by Trane or others, refer to the appropriate manufacturer's literature for allowable waiting periods for discharge of capacitors. Verify with a CAT III or IV voltmeter rated per NFPA 70E that all capacitors have discharged.

Before completing the following checks, turn the unit **OFF** and lock the main power disconnect switch open.

Filters

Inspect the return air and final filters. Clean or replace them if necessary. Refer to the Service and Maintenance chapter for filter information.

Cooling Season

⚠ WARNING

Hazardous Voltage!

Failure to disconnect power before servicing could result in death or serious injury.

Disconnect all electric power, including remote disconnects before servicing. Follow proper lockout/tagout procedures to ensure the power can not be inadvertently energized. Verify that no power is present with a voltmeter.

- ☐ Check the unit's drain pans and condensate piping to ensure that there are no blockages.
- ☐ Inspect the evaporator and condenser coils for dirt, bent fins, etc. If the coils appear dirty, clean them according to the instructions described in "Coil Cleaning" later in this section.
- ☐ Inspect the F/A-R/A damper hinges and pins to ensure that all moving parts are securely mounted. Keep the blades clean as necessary.

⚠ WARNING

Rotating Components!

Failure to disconnect power before servicing could result in rotating components cutting and slashing technician which could result in death or serious injury.

During installation, testing, servicing and troubleshooting of this product it may be necessary to work with live and exposed rotating components. Have a qualified or licensed service individual who has been properly trained in handling exposed rotating components, perform these tasks.

- ☐ Manually rotate the condenser fans to ensure free movement and check motor bearings for wear. Verify that all of the fan mounting hardware is tight.
- ☐ Verify that all damper linkages move freely; lubricate with white grease, if necessary.
- ☐ Check supply fan motor bearings; repair or replace the motor as necessary. If the unit model number indicates that the motor has an internal shaft ground, replace with the same motor type.
- ☐ Check the fan shaft bearings for wear (FC fans only). Replace the bearings as necessary. Lubricate the supply fan shaft bearings with a lithium-based grease.

  Note: *These bearings are considered permanently lubricated for normal operation. For severe dirty applications, if relubrication becomes necessary, use a lithium based grease. See Table 67, p. 134 for recommended greases.*

  Important: *The bearings are manufactured using a special synthetic lithium-based grease designed for long life and minimum relube intervals. Over lubrication can be just as harmful as not enough.*

- ☐ Use a hand grease gun to lubricate these bearings (FC fans only); add grease until a light bead appears all around the seal. Do not over lubricate! After greasing the bearings (FC fans only), check the setscrews to ensure that the shaft is held securely to the bearings and fan wheels. Make sure that all bearing braces are tight.
- ☐ Check the supply fan belt(s). If the belts are frayed or worn, replace them. Refer to the "Fan Belt Adjustment," p. 135 for belt replacement and adjustments.
- ☐ Check the condition of the gasket around the control panel doors. These gaskets must fit correctly and be in good condition to prevent water leakage.
- ☐ Verify that all wire terminal connections are tight.
- ☐ Remove any corrosion present on the exterior surfaces of the unit and repaint these areas.
- ☐ Generally inspect the unit for unusual conditions (e.g., loose access panels, leaking piping connections, etc.)

- ☐ Make sure that all retaining screws are reinstalled in the unit access panels once these checks are complete.
- ☐ With the unit running, check and record the following:
  - ambient temperature
  - compressor oil level (each circuit)
  - compressor suction and discharge pressures (each circuit)
  - superheat and subcooling (each circuit)

Record this data on an “operator’s maintenance log” like the one shown in Table 77, p. 154. If the operating pressures indicate a refrigerant shortage, measure the system superheat and system subcooling. For guidelines, refer to “Charging by Subcooling ,” p. 117.

Important: *Do not release refrigerant to the atmosphere! If adding or removing refrigerant is required, the service technician must comply with all federal, state and local laws. Refer to general service bulletin MSCU-SB-1 (latest edition).*

Heating Season

⚠ WARNING

Hazardous Voltage!

Failure to disconnect power before servicing could result in death or serious injury.

Disconnect all electric power, including remote disconnects before servicing. Follow proper lockout/tagout procedures to ensure the power can not be inadvertently energized. Verify that no power is present with a voltmeter.

Before completing the following checks, turn the unit **OFF** and lock the main power disconnect switch open.

- ☐ Inspect the unit air filters. If necessary, clean or replace them.
- ☐ Check supply fan motor bearings; repair or replace the motor as necessary. If the unit model number indicates that the motor has an internal shaft ground, replace with the same motor type.
- ☐ Check the fan shaft bearings for wear. Replace the bearings as necessary. Lubricate the supply fan shaft bearings with a lithium-based grease.

  Note: *These bearing are considered permanently lubricated for normal operation. For severe dirty applications, if relubrication becomes necessary, use a lithium based grease. See Table 67, p. 134 for recommended greases.*

  Important: *The bearings are manufactured using a special synthetic lithium-based grease designed for long life and minimum relube intervals. Over lubrication can be just as harmful as not enough.*

- ☐ Use a hand grease gun to lubricate these bearings; add grease until a light bead appears all around the seal. Do not over lubricate!
- ☐ After greasing the bearings, check the setscrews to ensure that the shaft is held securely. Make sure that all bearing braces are tight.
- ☐ Inspect both the main unit control panel and heat section control box for loose electrical components and terminal connections, as well as damaged wire insulation. Make any necessary repairs.
- ☐ Gas units only - Check the heat exchanger(s) for any corrosion, cracks, or holes.
- ☐ Gas units only - Check the combustion air blower for dirt or blockage from animals or insects. Clean as necessary.

  Note: *Typically, it is not necessary to clean the gas furnace. However, if cleaning does become necessary, remove the burner inspection plate from the back of the heat exchanger to access the drum. Be sure to replace the existing gaskets with new ones before reinstalling the inspection plate.*

- ☐ Check gas piping for leaks.
- ☐ Gas units only - Open the main gas valve and apply power to the unit heating section; then initiate a “Heat” test using the startup procedure described in “Gas Furnace Startup,” p. 120.

⚠ WARNING

Hazardous Gases and Flammable Vapors!

Failure to observe the following instructions could result in exposure to hazardous gases, fuel substances, or substances from incomplete combustion, which could result in death or serious injury. The state of California has determined that these substances may cause cancer, birth defects, or other reproductive harm. Improper installation, adjustment, alteration, service or use of this product could cause flammable mixtures or lead to excessive carbon monoxide. To avoid hazardous gases and flammable vapors follow proper installation and setup of this product and all warnings as provided in this manual.

Coil Cleaning

Regular coil maintenance, including annual cleaning enhances the unit’s operating efficiency by minimizing the following:

- Compressor head pressure and amperage draw
- Water carryover
- Fan brake horsepower
- Static pressure losses

At least once each year—or more often if the unit is located in a “dirty” environment—clean the evaporator, microchannel condenser, and reheat coils using the instructions outlined below. Be sure to follow these instructions as closely as possible to avoid damaging the coils.

⚠ WARNING

Hazardous Chemicals!

Failure to follow this safety precaution could result in death or serious injury. Coil cleaning agents can be either acidic or highly alkaline and can burn severely if contact with skin or eyes occurs.

Handle chemical carefully and avoid contact with skin. ALWAYS wear Personal Protective Equipment (PPE) including goggles or face shield, chemical resistant gloves, boots, apron or suit as required. For personal safety refer to the cleaning agent manufacturer’s Materials Safety Data Sheet and follow all recommended safe handling practices.

Refrigerant Coils

To clean refrigerant coils, use a soft brush and a sprayer.

Important: *DO NOT use any detergents with microchannel condenser coils. Pressurized water or air ONLY.*

For evaporator and reheat coil cleaners, contact the local Trane Parts Center for appropriate detergents.

1. Remove enough panels from the unit to gain safe access to coils.
2. Straighten any bent coil fins with a fin comb.
3. For accessible areas, remove loose dirt and debris from both sides of the coil. For dual row microchannel condenser coil applications, seek pressure coil wand extension through the local Trane Parts Center.
4. When cleaning evaporator and reheat coils, mix the detergent with water according to the manufacturer’s instructions. If desired, heat the solution to 150° F maximum to improve its cleansing capability.

   Important: *DO NOT use any detergents with microchannel coils. Pressurized water or air ONLY.*
5. Pour the cleaning solution into the sprayer. If a high-pressure sprayer is used:
   a. The minimum nozzle spray angle is 15 degrees.
   b. Do not allow sprayer pressure to exceed 600 psi.
   c. Spray the solution perpendicular (at 90 degrees) to the coil face.
   d. For evaporator and reheat coils, maintain a minimum clearance of 6" between the sprayer nozzle and the coil. For microchannel condenser coils, optimum clearance between the sprayer nozzle and the microchannel coil is 1"-3”.
6. Spray the leaving-airflow side of the coil first; then spray the opposite side of the coil. For evaporator and reheat coils, allow the cleaning solution to stand on the coil for five minutes.
7. Rinse both sides of the coil with cool, clean water.
8. Inspect both sides of the coil; if it still appears to be dirty, repeat Steps 6 and 7.
9. Reinstall all of the components and panels removed in Step 1; then restore power to the unit.
10. For evaporator and reheat coils, use a fin comb to straighten any coil fins which were inadvertently bent during the cleaning process.

Steam or Hot Water Coils

To clean a steam or hot water coil, use a soft brush, a steam-cleaning machine, and water.

1. Verify that switches 1S1 and 1S70 are turned “OFF”, and that the main unit disconnect is locked open.

⚠ WARNING

No Step Surface!

Failure to follow instruction below could result in death or serious injury.

Do not walk on the sheet metal drain pan. Walking on the drain pan could cause the supporting metal to collapse and result in the operator/technician falling.

2. Remove enough panels and components from the unit to gain sufficient access to the coil.
3. Straighten any bent coil fins with a fin comb. (Use the data in to determine the appropriate fin comb size.)
4. Remove loose dirt and debris from both sides of the coil with a soft brush.
5. Use the steam-cleaning machine to clean the leaving-air side of the coil first; start at the top of the coil and work downward; then clean the entering-air side of the coil, starting at the top of the coil and working downward.
6. Check both sides of the coil; if it still appears dirty, repeat Step 5.
7. Reinstall all of the components and panels removed in Step 2; then restore power to the unit.

Microchannel Condenser Coil Repair and Replacement

If microchannel condenser coil repair or replacement is required, refer to General Service Bulletin RT-SVB83*-EN for further details.

Fall Restraint

⚠ WARNING

Falling Off Equipment!

Failure to follow instructions below could result in death or serious injury.

This unit is built with fall restraint slots located on unit top that MUST be used during servicing. These slots are to be used with fall restraint equipment that will not allow an individual to reach the unit edge. However such equipment will NOT prevent falling to the ground, as they are NOT designed to withstand the force of a falling individual.

The fall restraint is located approximately 3 feet from the unit edge.

Figure 119. Fall restraint

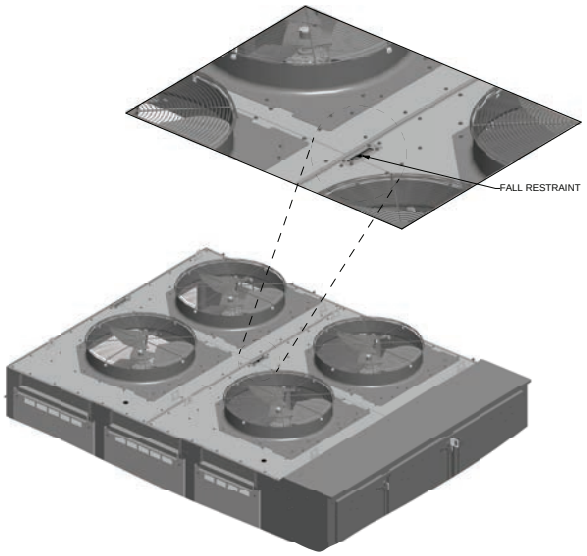

Final Process

Record the unit data in the blanks provided.

Table 76. Unit data log

Complete Unit Model Number:	
Unit Serial Number:	
Unit "DL" Number ("design special" units only):	
Wiring Diagram Numbers (from unit control panel):	
-schematic(s)	
-connections	
Network ID (LCI/BCI):	

Table 77. Sample maintenance log

Date	Current Ambient Temp F/C	Refrigerant Circuit #1						Refrigerant Circuit #2					
		Compr. Oil Level	Suct. Press. Psig/kPa	Disch. Press Psig/kPa	Liquid Press Psig/kPa	Super-heat F/C	Sub-cool F/C	Compr. Oil Level	Suct. Press. Psig/kPa	Disch. Press Psig/kPa	Liquid Press Psig/kPa	Super-heat F/C	Sub-cool F/C
		- ok - low						- ok - low					
		- ok - low						- ok - low					
		- ok - low						- ok - low					
		- ok - low						- ok - low					
		- ok - low						- ok - low					
		- ok - low						- ok - low					
		- ok - low						- ok - low					
		- ok - low						- ok - low					
		- ok - low						- ok - low					
		- ok - low						- ok - low					
		- ok - low						- ok - low					
		- ok - low						- ok - low					
		- ok - low						- ok - low					
		- ok - low						- ok - low					

Unit Wiring Diagram Numbers

Note: *Wiring diagrams can be accessed via e-Library by entering the diagram number in the literature order number search field or by calling technical support.*

Table 78. Wiring diagram matrix

Diagram Number	Name
12134353	POWER SCHEMATIC; 20-75T AIRFLOW, WITH BYPASS
12134354	POWER SCHEMATIC; 20-75T AIRFLOW, WITHOUT BYPASS
12134355	POWER SCHEMATIC; 90-130T AIRFLOW, WITH BYPASS
12134356	POWER SCHEMATIC; 90-130T AIRFLOW, WITHOUT BYPASS
12134357	POWER SCHEMATIC; 20-75T REF POWER, IND MOTORS, STD AMBIENT
12134358	POWER SCHEMATIC; 20-75T REF POWER, IND MOTORS, LOW AMBIENT
12134359	POWER SCHEMATIC; 20-75T REF POWER, EC MOTORS
12134360	POWER SCHEMATIC; 90-130T REF POWER, STD AMBIENT
12134361	POWER SCHEMATIC; 90-130T REF POWER, LOW AMBIENT
12134362	CONTROLS SCHEMATIC; 20-130T UNIT CONTROLS
12134363	CONTROLS SCHEMATIC; 20-75T CUSTOMER CONNECTIONS #1
12134364	CONTROLS SCHEMATIC; 90-130T CUSTOMER CONNECTIONS #1
12134365	CONTROLS SCHEMATIC; 20-130T CUSTOMER CONNECTIONS #2
12134366	CONTROLS SCHEMATIC; 20-75T REF SYSTEM #1, IND MOTORS
12134367	CONTROLS SCHEMATIC; 20-75T REF SYSTEM #1, EC MOTORS
12134368	CONTROLS SCHEMATIC; 90-130T REF SYSTEM #1
12134369	CONTROLS SCHEMATIC; 20-75T REF SYSTEM #2
12134370	CONTROLS SCHEMATIC; 90-130T REF SYSTEM #2
12134371	CONTROLS SCHEMATIC; 20-130T AIR HANDLER CONTROLS #1
12134372	CONTROLS SCHEMATIC; 20-130T AIR HANDLER CONTROLS #2
12134373	CONTROLS SCHEMATIC; 20-130T AIR HANDLER CONTROLS #3
12134374	CONTROLS SCHEMATIC; 20-75T AIR HANDLER CONTROLS #4
12134375	CONTROLS SCHEMATIC; 90-130T AIR HANDLER CONTROLS #4
12134376	SCHEMATIC; GAS HEAT, ULTRA-MOD
12134377	SCHEMATIC; GAS HEAT, MODULATING
12134378	SCHEMATIC; GAS HEAT, 2 STAGE
12134379	SCHEMATIC; ELECTRIC HEAT, 7 CIRCUIT
12134380	SCHEMATIC; ELECTRIC HEAT, 6 CIRCUIT
12134381	SCHEMATIC; ELECTRIC HEAT, 3 CIRCUIT
12134382	SCHEMATIC; HYDRONIC HEAT

Table 78. Wiring diagram matrix (continued)

Diagram Number	Name
12134383	COMPONENT LAYOUT; 20-75T UNIT DEVICE LOCATIONS
12134384	COMPONENT LAYOUT; 90-130T UNIT DEVICE LOCATIONS
12134385	COMPONENT LAYOUT; 20-75T MAIN C-BOX / LOW VOLTAGE PANEL
12134386	COMPONENT LAYOUT; 90-130T MAIN C-BOX / AUX C-BOX
12134387	COMPONENT LAYOUT; 20-75T MAIN C-BOX FUSE REPLACEMENT TABLES
12134388	COMPONENT LAYOUT; 90-130T MAIN C-BOX FUSE REPLACEMENT TABLES
12134389	COMPONENT LAYOUT; 20-75T VFD SECTION PANELS
12134390	COMPONENT LAYOUT; 90-130T VFD SECTION PANELS
12134391	COMPONENT LAYOUT; 20-75T GAS HEAT, ULTRA-MOD
12134392	COMPONENT LAYOUT; 20-75T GAS HEAT, MODULATING AND 2 STAGE
12134393	COMPONENT LAYOUT; 20-75T ELECTRIC HEAT
12134394	COMPONENT LAYOUT; 20-75T HYDRONIC HEAT
12134395	COMPONENT LAYOUT; 90-130T GAS HEAT, ULTRA-MOD
12134396	COMPONENT LAYOUT; 90-130T GAS HEAT, MODULATING AND 2 STAGE
12134397	COMPONENT LAYOUT; 90-130T ELECTRIC HEAT

Warranty and Liability Clause

COMMERCIAL EQUIPMENT - 20 TONS AND LARGER AND RELATED ACCESSORIES

PRODUCTS COVERED - This warranty* is extended by Trane Inc. and applies only to commercial equipment rated 20 Tons and larger and related accessories.

The Company warrants for a period of 12 months from initial startup or 18 months from date of shipment, whichever is less, that the Company products covered by this order (1) are free from defects in material and workmanship and (2) have the capacities and ratings set forth in the Company's catalogs and bulletins, provided that no warranty is made against corrosion, erosion or deterioration. The Company's obligations and liabilities under this warranty are limited to furnishing f.o.b. factory or warehouse at Company designated shipping point, freight allowed to Buyer's city (or port of export for shipment outside the conterminous United States) replacement equipment (or at the option of the Company parts therefore) for all Company products not conforming to this warranty and which have been returned to the manufacturer. The Company shall not be obligated to pay for the cost of lost refrigerant. No liability whatever shall attach to the Company until said products have been paid for and then said liability shall be limited to the purchase price of the equipment shown to be defective.

The Company makes certain further warranty protection available on an optional extra-cost basis. Any further warranty must be in writing, signed by an officer of the Company.

The warranty and liability set forth herein are in lieu of all other warranties and liabilities, whether in contract or in negligence, express or implied, in law or in fact, including implied warranties of merchantability and fitness for particular use. In no event shall the Company be liable for any incidental or consequential damages.

THE WARRANTY AND LIABILITY SET FORTH HEREIN ARE IN LIEU OF ALL OTHER WARRANTIES AND LIABILITIES, WHETHER IN CONTRACT OR IN NEGLIGENCE, EXPRESS OR IMPLIED, IN LAW OR IN FACT, INCLUDING IMPLIED WARRANTIES OF MERCHANTABILITY AND FITNESS FOR PARTICULAR USE, IN NO EVENT SHALL WARRANTOR BE LIABLE FOR ANY INCIDENTAL OR CONSEQUENTIAL DAMAGES.

Manager - Product Service

Trane

Clarksville, Tn 37040-1008

PW-215-2688

*A 10 year limited warranty is provided on all stainless steel Gas Heat Exchangers.

*Optional Extended Warranties are available for compressors and heat exchangers of Combination Gas-Electric Air Conditioning Units.

*A 5 year limited warranty is provided for optional "AMCA 1A Ultra Low Leak" airfoil blade economizer assemblies and the "AMCA 1A Ultra Low Leak" economizer actuator.

Notes

Trane - by Trane Technologies (NYSE: TT), a global innovator - creates comfortable, energy efficient indoor environments for commercial and residential applications. For more information, please visit trane. com or tranetechnologies.com.

Trane has a policy of continuous product and product data improvements and reserves the right to change design and specifications without notice. We are committed to using environmentally conscious print practices.

RT-SVX072B-EN 10 Sep 2022
Supersedes RT-SVX072A-EN (April 2022)

©2022 Trane