Installation, Operation, and Maintenance

Horizontal Classroom Unit Ventilator

Model HUV

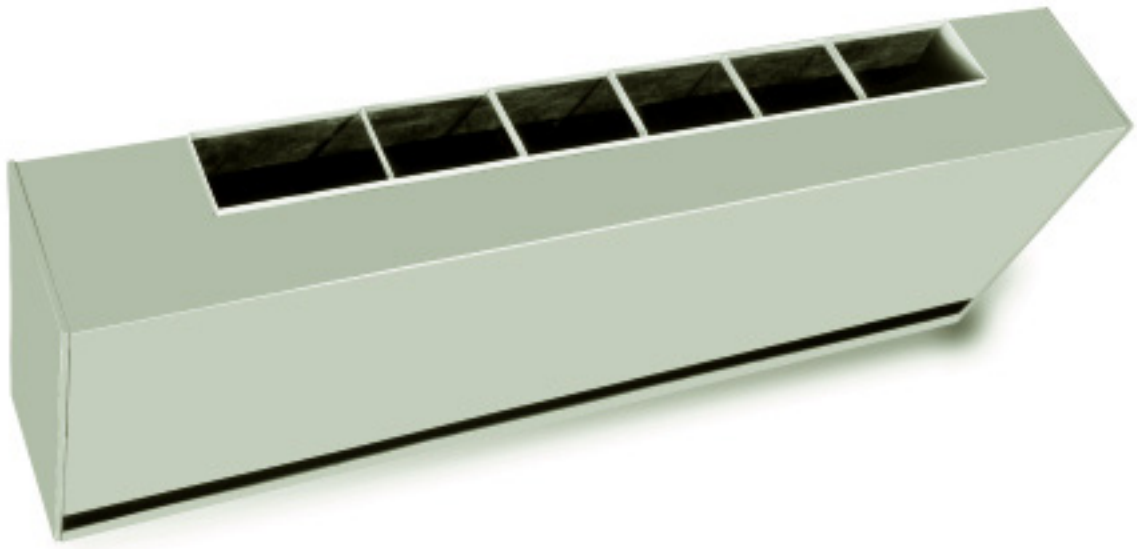

Model Numbers HUV - "C" and later Design Sequence 750 cfm — 2000 cfm

⚠ SAFETY WARNING

Only qualified personnel should install and service the equipment. The installation, starting up, and servicing of heating, ventilating, and air-conditioning equipment can be hazardous and requires specific knowledge and training. Improperly installed, adjusted or altered equipment by an unqualified person could result in death or serious injury. When working on the equipment, observe all precautions in the literature and on the tags, stickers, and labels that are attached to the equipment.

November 2021 **UV-SVX004D-EN**

Introduction

Read this manual thoroughly before operating or servicing this unit.

Warnings, Cautions, and Notices

Safety advisories appear throughout this manual as required. Your personal safety and the proper operation of this machine depend upon the strict observance of these precautions.

The three types of advisories are defined as follows:

⚠WARNING Indicates a potentially hazardous situation which, if not avoided, could result in death or serious injury.

⚠CAUTION Indicates a potentially hazardous situation which, if not avoided, could result in minor or moderate injury. It could also be used to alert against unsafe practices.

NOTICE Indicates a situation that could result in equipment or property-damage only accidents.

Important Environmental Concerns

Scientific research has shown that certain man-made chemicals can affect the earth's naturally occurring stratospheric ozone layer when released to the atmosphere. In particular, several of the identified chemicals that may affect the ozone layer are refrigerants that contain Chlorine, Fluorine and Carbon (CFCs) and those containing Hydrogen, Chlorine, Fluorine and Carbon (HCFCs). Not all refrigerants containing these compounds have the same potential impact to the environment. Trane advocates the responsible handling of all refrigerants-including industry replacements for CFCs and HCFCs such as saturated or unsaturated HFCs and HCFCs.

Important Responsible Refrigerant Practices

Trane believes that responsible refrigerant practices are important to the environment, our customers, and the air conditioning industry. All technicians who handle refrigerants must be certified according to local rules. For the USA, the Federal Clean Air Act (Section 608) sets forth the requirements for handling, reclaiming, recovering and recycling of certain refrigerants and the equipment that is used in these service procedures. In addition, some states or municipalities may have additional requirements that must also be adhered to for responsible management of refrigerants. Know the applicable laws and follow them.

⚠WARNING

Proper Field Wiring and Grounding Required!

Failure to follow code could result in death or serious injury. All field wiring MUST be performed by qualified personnel. Improperly installed and grounded field wiring poses FIRE and ELECTROCUTION hazards. To avoid these hazards, you MUST follow requirements for field wiring installation and grounding as described in NEC and your local/state/national electrical codes.

⚠WARNING

Personal Protective Equipment (PPE) Required!

Failure to wear proper PPE for the job being undertaken could result in death or serious injury. Technicians, in order to protect themselves from potential electrical, mechanical, and chemical hazards, MUST follow precautions in this manual and on the tags, stickers, and labels, as well as the instructions below:

- **Before installing/servicing this unit, technicians MUST put on all PPE required for the work being undertaken (Examples; cut resistant gloves/sleeves, butyl gloves, safety glasses, hard hat/bump cap, fall protection, electrical PPE and arc flash clothing). ALWAYS refer to appropriate Safety Data Sheets (SDS) and OSHA guidelines for proper PPE.**
- **When working with or around hazardous chemicals, ALWAYS refer to the appropriate SDS and OSHA/GHS (Global Harmonized System of Classification and Labeling of Chemicals) guidelines for information on allowable personal exposure levels, proper respiratory protection and handling instructions.**
- **If there is a risk of energized electrical contact, arc, or flash, technicians MUST put on all PPE in accordance with OSHA, NFPA 70E, or other country-specific requirements for arc flash protection, PRIOR to servicing the unit. NEVER PERFORM ANY SWITCHING, DISCONNECTING, OR VOLTAGE TESTING WITHOUT PROPER ELECTRICAL PPE AND ARC FLASH CLOTHING. ENSURE ELECTRICAL METERS AND EQUIPMENT ARE PROPERLY RATED FOR INTENDED VOLTAGE.**

©2021 Trane

⚠ WARNING

Follow EHS Policies!

Failure to follow instructions below could result in death or serious injury.

- **All Trane personnel must follow the company's Environmental, Health and Safety (EHS) policies when performing work such as hot work, electrical, fall protection, lockout/tagout, refrigerant handling, etc. Where local regulations are more stringent than these policies, those regulations supersede these policies.**
- **Non-Trane personnel should always follow local regulations.**

Copyright

This document and the information in it are the property of Trane, and may not be used or reproduced in whole or in part without written permission. Trane reserves the right to revise this publication at any time, and to make changes to its content without obligation to notify any person of such revision or change.

Trademarks

All trademarks referenced in this document are the trademarks of their respective owners.

Revision History

Minor error corrections.

Table of Contents

Model Number Description 7
General Information 9
Unit Description 9
Options 9
Unit Ventilator Controls (Options) 10
ECM Application Notes 11
Pre-Installation 12
Jobsite Inspection 12
Jobsite Storage 12
Dimensions and Weights 13
Unit Location and Clearances 13
Installation - Mechanical 19
Location Considerations 19
Unit Mounting 19
Horizontal Recessed Mounting 19
Coil Piping and Connections 21
Piping Packages 21
Valve and Actuator Operation 23
Valve Stroke Time 23
Balancing Manual Circuit Setter Valve . . 24
Split System Units 25
Refrigerant Piping 25
Steam Piping 26
Modulating Steam Valves 26
Installation - Controls 27
Control Options 27
Customer Supplied Terminal Interface (CSTI) 27
Standard Adapter Board 27
Thermostat 30
Tracer® ZN520 Controller 31
Tracer® UC400 Controller 32
Wiring Overview Outline 32
General Instructions 33
Connecting Wires to Terminals 33
BACnet MS/TP Link 33
Power Supply 34
Zone Sensor Options 35
Fan Mode Switch Installation 36
Zone Sensor Installation 37
Location Considerations 37
Location Considerations for Wireless Zone Sensors 37
Height Requirements 37
Mounting Surfaces 37
Location Considerations 37
Zone Sensor Dimensions 37
Wired Zone Sensor 38
Receivers 39
Zone Sensor Setting 39
Address Setting 39
Observing the Receiver for Readiness to Associate 40
Associating the Sensor to the Receiver . .40
Testing Signal Strength and Battery Status 40
Sensor Operations 41
Temporary Occupancy (Timed Override) 41
End-of-Range Temperature Values 41
Receiver Power-up Sequence 41
Sensor Transmission Time and Temperature Variables 42
Wireless Sensor Specifications 42
Configuring the Wireless Display Sensor (Model WDS only) 43
Configuration Procedure 43
Displaying Setpoint or Temperature 44
Locking or Unlocking Settings 44
WDS Operating Mode 45
Changing Room Temperature 45
Changing Heating and Cooling Room Temperature Settings 45
Changing the Fan Setting 45
Requesting Temporary Occupancy 46
Error Codes 46
Lock Symbol 46
Testing Signal Strength 46
Testing Battery Status 46

Time Clock 47
Setting the Time Clock 47
Installation - Electrical 49
Wiring 49
Electrical Wiring 49
Electric Heat Units 49
Heating Coils with Direct Expansion Cooling 50
ECM Overview and Setup 51
Overview 51
General Information 51
Trane BLDC Motor 51
ECM Engine Controller 51
Status Display 52
Installation and Initial Setup 52
Installation and Initial Setup 53
Adjustment and Configuration of the Engine Board 54
Initial Setup and Configuration 58
Configuration 58
Configuring the ECM Engine Controller . 58
Configuring the ECM Engine Board 61
Pre-Start 66
Startup 67
Unit Startup 67
Thermostat 67
Tracer® ZN520 Unit Startup 69
Tracer® UC400 Unit Startup 69
General Information 70
Fan Mode Switch Operation 70
Tracer® ZN520 Operation 70
UC400 Controller Operation 70
Tracer® ZN520 Sequence of Operation . . 70
Cooling Operation (Tracer® ZN520) 71
Fan Mode Operation (Tracer® ZN520) . . 72
UC400 Sequence of Operation 77
Power-up Sequence (UC400) 77
Random Start (UC400) 77
Occupancy Modes (UC400) 77
Timed Override Control (UC400) 78
Zone Temperature Control (UC400) 78
Discharge Air Tempering (UC400) 79
Heating or Cooling Mode (UC400) 79
Entering Water Temperature Sampling Function (UC400) 79
Fan Operation (UC400) 79
Exhaust Control (UC400) 80
Valve Operation (UC400) 80
Modulating Outdoor/Return Air Damper (UC400) 81
Two-position Control Of A Modulating Outdoor Air Damper (UC400) 82
Electric Heat Operation (UC400) 82
Dehumidification Operation (UC400) 82
Peer-to-peer Communication (UC400) . . .82
Unit Protection Strategies (UC400) 82
Maintenance 84
Service Access 84
Periodic Maintenance 84
Filters 84
Removal of the Drain Pan 84
Removal of the Fanboard and Coil Cleaning 85
Lubrication: Fan Shaft 85
Motor 86
Preventive Maintenance 86
Diagnostics and Troubleshooting 87
Troubleshooting Checklist 87
Testing (Thermostat) 88
Output Testing and Diagnostics (Tracer® ZN520) 88
Output Testing (UC400) 92
Diagnostics (UC400) 92
Troubleshooting (Wireless Controls) 94
Troubleshooting (UC400) 100
Troubleshooting (ECM) 102
General Information (ECM) 103
Troubleshooting Information (ECM) . . .103
Replacing ECM Components 105
Circuit Modules Replacement Notes/Work Instructions 106

Softsetting the IMC Address of an ECM Engine Module 106
Accessories 108
Wallboxes 108
General Instructions 108
Installation in Curtain Walls 110
Wiring Diagrams 111

Model Number Description

Digit 1, 2, 3 — Unit Configuration

HUV= Horizontal Unit Ventilator

Digit 4 — Development Sequence

C = Third generation

Digit 5, 6, 7 — Capacity; Nominal

075 = 750 CFM
100 = 1000 CFM
125 = 1250 CFM
150 = 1500 CFM
200 = 2000 CFM

Digit 8 — Voltage (Volt/Hz/Phase)

1 = 120V/60/1
2 = 208V/60/1
3 = 208V/60/3
4 = 240V/60/1
5 = 240V/60/3
6 = 277V/60/1
8 = 480V/60/3-phase 4-wire power supply

Digit 9 — Motor

0 = Free discharge ECM
7 = Free discharge ECM, low FLA
A = High static ECM
H = High static ECM, low FLA

Digit 10, 11 — Design Sequence

** = Design sequence

Digit 12, 13 — Coil Letter Designation

(Single Coil Options)

AA = 2-row, 12 fpi chilled-water/hot- water changeover
AB = 2-row, 16 fpi chilled-water/hot-water changeover
AC = 3-row, 12 fpi chilled-water/hot-water changeover
AD = 4-row, 12 fpi chilled-water/hot-water changeover
AE = 4-row, 16 fpi chilled-water/hot-water changeover
H1 = 1-row, 12 fpi heating coil
H2 = 1-row, 14 fpi heating coil
H3 = 1-row, 16 fpi heating coil
H4 = 2-row, 12 fpi heating coil
H5 = 2-row, 14 fpi heating coil
H6 = 2-row, 16 fpi heating coil
K1 = 1-row low capacity steam coil
K2 = 1-row high capacity steam coil
G0 = 2-row, 12 fpi DX coil

(Coupled Coil Options)

DA = 1-row, 12 fpi hot-water coil with 2-row,12 fpi chilled-water coil
DC = 1-row, 12 fpi hot-water coil with 2-row, 14 fpi chilled-water coil
DD = 1-row, 12 fpi hot-water coil with 3-row, 12 fpi chilled-water coil
DE = 1-row, 14 fpi hot-water coil with 3-row, 14 fpi chilled-water coil
DK = 1-row steam coil with 3-row chilled-water coil
X3 = 3-element electric coil with 3-row chilled-water coil (2-row on size 125)
X4 = 4-element electric coil with 3-row chilled-water coil (2-row on size 125)
X6 = 6-element electric coil with 3-row chilled-water coil (2-row on size 125)
GK = 1-row steam coil with 2-row DX coil
GA = 1-row heating coil with 2-row DX coil
G3 = 3-element electric heat coil with 2-row DX coil
G4 = 4-element electric heat coil with 2-row DX coil
G6 = 6-element electric heat coil with 2-row DX coil
R1 = 3-row, 12 fpi chilled-water coil with 1-row, 12 fpi hot-water coil
R2 = 3-row, 14 fpi chilled-water coil with 1-row, 12 fpi hot-water coil

Digit 14 — Coil Connections

A = Right-hand supply
B = Left-hand supply
C = 2 coil LH cooling/RH heating
D = 2 coil RH cooling/LH heating

Digit 15 — Control Types

A = Tracer® UC400-B
B = Tracer® UC400-B with time clock
C = Tracer® UC400-B with Air-Fi® Wireless Communications Interface (WCI)
N = CSTI fan status
P = Thermostat
Q = Tracer® ZN520
T = Tracer® ZN520 with time clock
X = Tracer® ZN520 with fan status
8 = Customer-supplied terminal interface (CSTI)
9 = CSTI with low temp

Digit 16 — Face-and-Bypass/Electric Heat Stages

0 = None
1 = Face-and-bypass damper - field installed actuator
8 = Face-and-bypass damper - factory installed actuator
4 = Single-stage electric heat control
5 = Dual-stage electric heat control

Digit 17 — Future Option

0 = None

Digit 18 — Damper Configuration

0 = Field-installed damper actuator
1 = 100% return air/no damper or actuator

(Modulating ASHRAE Cycle II)

F = Return air/outside air damper and actuator (2–10 Vdc)
A = Return air/outside air damper and actuator (3-point modulating)
E = Return air/outside air damper and actuator with exhaust (3-point modulating)

(Two Position Control)

D = Damper with manual quad adjustment

Digit 19 — Zone Sensor/Fan Speed Switch

0 = No sensor - unit-mounted fan speed switch (CSTI)
A = Wall-mounted
J = Wall-mounted zone sensor (OALMH; setpoint dial; OCC/UNOCC
K = Wall-mounted zone sensor (OALMH; setpoint dial)
L = Unit-mounted zone sensor (OALMH; setpoint dial)
M = Wall-mounted display sensor with setpoint adjustment
P = Wall-mounted sensor (setpoint dial; OCC/UNOCC with unit mounted speed switch
Q = Wall-mounted sensor (setpoint dial) with unit speed switch
3 = Wireless display sensor (OALMH)
4 = Wireless sensor - ext adjustment
5 = Unit-mounted variable fan speed control (CSTI)

Digit 20 — Inlet Arrangement

A = Fresh air (FA) duct top/return air (RA) duct lower back
B = Fresh air duct top/return air duct bottom
C = Fresh air duct top/return air bar grille bottom
F = Fresh air duct upper back/return air duct lower back
G = Fresh air duct upper back/return air duct bottom
H = Fresh air duct upper back/return air bar grille bottom
J = Fresh air duct upper back/return air open bottom
K = 100% fresh air duct upper back
L = 100% return air duct lower back
M = 100% return air duct bottom
N = 100% return air bar grille bottom
P = 100% return air open bottom

Model Number Description

Digit 21 — Discharge Arrangement

1 = Bar grille discharge
2 = Duct collar discharge per submittal
3 = Duct collar discharge 3/4 in. from top
5 = Front double deflection grille discharge

Digit 22 — Unit Access Panel

0 = Standard horizontal access panel
1 = Safety chain/standard access panel
2 = Removable access panel
3 = Safety chain/removable access panel

Digit 23 — Recessing Flange

0 = No recessing flange
1 = Standard recessing flange

Digit 24 — Piping Package

0 = None
E = Basic- ball valve supply and return
F = Basic - ball valve supply and manual circuit setter return
G = Deluxe - ball valve supply and manual circuit setter return
H = Deluxe - ball valve supply and return with auto flow

Digit 25 — Filter

1 = Throwaway filters
2 = MERV 8 filter
3 = MERV 13 filter

Digit 26 — Color Selection

1 = Deluxe beige cabinet
2 = Cameo white cabinet
3 = Soft dove cabinet
4 = Stone gray cabinet
5 = Driftwood gray cabinet

Digit 27 — Motor Disconnect

0 = No disconnect
A = Non-fused toggle
B = Circuit breaker

Digit 28 — Control Accessories

0 = None
A = $C0_2$ sensor control support
B = Wall-mounted relative humidity sensor

(Options)

C = Air-Fi® dehumidification and $C0_2$
D = Air-Fi® dehumidification
E = Air-Fi® $C0_2$

Digit 30 - Cooling/Changeover Valve Type

0 = None
A = 2-way, 2 position N.C.
B = 2-way, 2 position N.O.
C = 3-way, 2 position N.C.
D = 3-way, 2 position N.O.
E = 2-way, modulating
F = 3-way, modulating
G = 2-way, analog (2-10 VDC)
H = 3-way, analog (2-10 VDC)
J = Field supplied, 2 position N.C.
K = Field supplied, 2 position N.O.
L = Field supplied, modulating
M = Field supplied, analog (2-10 VDC)

Digit 31 — Cv Cooling/ Changeover Valve

0 = None
A = 2-way 2.3 Cv
B = 2-way 3.3 Cv
C = 2-way 4.6 Cv
D = 2-way 6.6 Cv
E = 3-way 2.7 Cv
F = 3-way 4.6 Cv
G = 3-way 7.4 Cv

Digit 32 — Heating Valve Type

0 = None
A = 2-way, 2 position N.C.
B = 2-way, 2 position N.O.
C = 3-way, 2 position N.C.
D = 3-way, 2 position N.O.
E = 2-way, modulating
F = 3-way, modulating
G = 2-way, analog (2-10 VDC)
H = 3-way, analog (2-10 VDC)
J = Field supplied, 2 position N.C.
K = Field supplied, 2 position N.O.
L = Field supplied, modulating
M = Field supplied, analog (2-10 VDC)

Digit 33 — Cv Heating Valve

0 = None
A = 2-way 1.4 Cv
B = 2-way 2.4 Cv
C = 2-way 3.4 Cv
D = 2-way 4.8 Cv
E = 2-way 5.9 Cv
F = 3-way 2.7 Cv
G = 3-way 4.6 Cv
N = 3-way 7.4 Cv
J = Steam 1.8 Cv valve only
K = Steam 4.6 Cv valve only
P = Steam 7.3 Cv valve only

Digit 34 — Cooling/Changeover Auto Flow GPM

0 = None
A = 4.0
B = 4.5
C = 5.0
D = 6.0
E = 6.5
F = 7.0
G = 8.0

Digit 35 — Heating Auto Flow GPM

0 = None
A = 1.0
B = 1.5
C = 2.0
D = 2.5
E = 3.0
F = 3.5
G = 4.0
H = 4.5
J = 5.0
K = 6.0

General Information

Unit Description

Configuration. This classroom unit ventilator is configured in a horizontal (ceiling mount) configuration. The units range from 750 cfm to 2000 cfm for the horizontal configuration.

Cabinet. The units are constructed of 14- and 16-gauge zinc coated steel. All steel surfaces are cleaned, phosphatized, rinsed and dried before application of final finish paint. The paint is applied by an electrostatic powder spray system, minimum thickness of 1.5 mil which results in an appliance grade finish.

Front Panels. The front panels are retained by Allen wrench operated locks which open with a 180-degree rotation.

The bottom panel is constructed of heavy gauge material.

End Pockets. Unit Ventilators are equipped with end pockets to provide field installation of valves, piping, and controls. The units have a large pipe access opening in both end pockets and large knockouts for piping and electrical connections. All electrical connections are made in the left-hand end pocket, with exception of units equipped with the electric heating coil option.

Drain Pan. The drain pan is positively sloped in all planes to assure proper drainage and help eliminate the risk of microbial growth. To help ensure indoor air quality, the drain pan is insulated on the bottom to help prevent condensate formation. The drain pan can be easily removed for cleaning purposes. The drain pan is drilled-out and pitched toward the cooling coil connection during assembly per model number selection.

Fanboard. The fanboard assembly is acoustically designed in a single, rigid assembly that includes the fans, fan housing, bearings, fan shaft and motor. The fan motor is mounted on the fanboard. The fanboard is made from 14-gauge galvanized steel to resist corrosion and increase strength.

Electrically Commutated Motor (ECM). All motors are brushless DC (BLDC)/electronically commutated motors (ECM) factory-programmed and run-tested in assembled units. The motor controller is mounted in a control box with a built-in integrated user interface and LED tachometer. If adjustments are needed, motor parameters can be adjusted through momentary contact switches accessible on the motor control board.

Motors will soft-ramp between speeds to lessen the acoustics due to sudden speed changes. Motors can be operated at three speeds or with variable speed controller. The motor will choose the highest speed if there are simultaneous/conflicting speed requests.

All motors have integral thermal overload protection with a maximum ambient operating temperature of 104°F and are permanently lubricated. Motors are capable of starting at 50 percent of rated voltage and operating at 90 percent of rated voltage on all speed settings. Motors can operate up to 10 percent over voltage.

Filter. Standard units are equipped with a single 1-inch thick filter (MERV 8) that is accessible without removal of the unit front panel. Filter options include throwaway, MERV 8 and MERV 13 options.

OA/RA Damper. Trane unit ventilators are equipped with dual blade type mixing damper to ensure proper modulation and mixing of return and outdoor air designed in accordance to ARI 840. A splitter is placed between the damper blades to separate the fresh-air and return-air compartments to prevent draft blow-through.

Options

OA/RA Actuator. The OA/RA actuator provides true spring return operation for positive close-off of the OA/RA damper. The spring return system of the actuator closes the outside damper if power is lost to the building. When ordered with factory mounted controls, the actuator is 3-point floating. A 2 to 10 Vdc actuator is also available when other than Trane controls is required. See the following table for technical data of the OA/RA actuator.

Figure 1. Technical data for OA/RA actuator

Table 1. Technical data for OA/RA actuator

Power Supply	24 Vac ±20% 50/60Hz 24 Vac ±10%
Power	Running: 2.5W
Consumption	Holding: 1W
Transformer Sizing	5VA (class 2 power source)
Overload	Electronic throughout
Protection	0- to 95-degree rotation
Control Signal	2–10 Vdc 3 point floating w/ Trane controls
Rotation Angle	95-degree max. Adjustable w/mechanical stop
Torque	35-inch/lb
Rotation Direction	Spring return reversible w/CW/CCW mounting
Position Indication	Visual indicator, 0- to 95-degrees
Noise Level	Running: 30dB

Face and Bypass. The face and bypass option consist of an actuator, damper blade and 2-position water valve (option).

During bypass mode, the damper moves to prevent air from traveling through the coil. The damper blade is tightly sealed to eliminate heat pickup while in the full bypass mode.

A two-position isolation valve control (option) further enhances this system by closing off all water flow to the coil during full bypass operation. Two-pipe main steam systems utilize the face and bypass as part of the standard operation and may incorporate the optional isolation valve.

Face and Bypass Actuator. The face and bypass damper actuator incorporates a direct couple design for the horizontal configurations. The actuator is provided with electronic protection against overload. It does not contain, nor require a limit switch. When reaching the damper end position, the actuator automatically stops. The gears can be manually disengaged with a button on the actuator housing.

Figure 2. Technical data for face and bypass actuator

Table 2. Technical data for face and bypass actuator

Power Supply	24 Vac ±20% 50/60Hz 24 Vac ±10%
Power Consumption	2W
Transformer Sizing	3VA (class 2 power source)
Manual Override	External push button
Control Signal	3-point floating w/Trane controls
Rotation Angle	95-degree max. Adjustable w/mechanical stop
Torque	35-inch/lb
Rotation Direction	Reversible with switch L/R
Position Indication	Clip-on indicator
Noise Level	Less than 35dB

Unit Ventilator Controls (Options)

Customer Supplied Terminal Interface (CSTI).

Units containing the end device control design will incorporate a pre-wired, selected control components to a terminal strip for wiring a field-provided controller and temperature sensor.

Entering water temperature sensor is factory mounted on the supply water pipe. If there are problems sensing accurate temperature for non-flowing water, move entering water temperature sensor as far down the supply line as possible to get accurate water temperatures.

Note: *Entering water temperature sensor is factory mounted on the supply water pipe. If there are problems sensing accurate temperature for non-flowing water, move entering water temperature sensor as far down the supply line as possible to get accurate water temperatures.*

Thermostat. The Thermostat is a factory configured and tested design. The thermostat is configured per the unit selections and has modes of operation including hydronic/DX cooling, hydronic/electric/steam heat, 2 pipe changeover, and 4 pipe changeover.

Tracer® ZN520 Control Package. The Tracer® ZN520 electronic digital controller is a factory installed, tested and commissioned LonTalk® certified design. It may be used in a stand-alone control scheme, or as part of a building automation system. The controller is pre-wired to Trane selected control components best suited for room comfort. For more information on the Tracer® ZN520 unit controller operation and service issues, refer to CNT-SVX04*-EN.

Tracer® UC400 Control Package. The Tracer® UC400 electronic digital controller is a factory installed, tested and commissioned BACnet® certified design. The Tracer® UC400 operates as a single zone VAV controller and ramps fan speed based on space load. It may be used in a stand-alone control scheme, or as part of a building automation system. The controller is mounted, pre-wired, and pre-programmed to selected control components best suited for room comfort. For more information on the Tracer® UC400 unit controller operation and service issues, refer to BAS-SVX48*-EN.

When Trane controls are ordered for an installation, the controls are shipped already installed and factory-tested to ensure proper operation at start-up.

Notes:

- *For more details on the ZN520 unit controller option or operation and service/replacement issues, please refer to CNT-SVX04*-EN.*
- *For more details on the UC400 unit controller option or operation and service/replacement issues, refer to BAS-SVX48*-EN.*

Automatic Controls

Regardless of type of controls, all Tracer® systems provide a sequence of operation designed to provide rapid warm-up of the room and increase ventilation while offsetting overheating.

In addition, air conditioning installations will usually provide a means of system changeover from heating to cooling as well as provisions for drawing a pre-determined amount of outside air into the room.

Unit Switch

The unit "On-Off" switch, provided by Trane, is typically housed in the control box mounted in the left hand end pocket immediately below the discharge grille.

When Tracer® ZN520 or Tracer® UC400 unit controllers are used, the unit switch is located on the switch module in the end pocket behind the front panel rather than below the grille.

ECM Application Notes

The new Trane BLDC system has some notable differences to traditional designs.

RPM Mode

The motors are programmed from the factory to run in rpm mode and will not change rpm based on external static pressure, except at the performance limits of the motor/controller. For ducted units, the units are shipped with the rpm set for 0.2 in. ESP for high, medium, and low speeds. The speeds can for high, medium, and low operation, but should not be changed for the electric heat actuation speeds.

Generally, the fans deliver less cfm for the same rpm, if the static is increased and the power will decrease. The fan will deliver more cfm for the same rpm, if the static is decreased and the fan power will increase. A unit with high static configuration should not be used to free-deliver air (i.e., with no ducting attached).

Field Power Wiring

Note: *This product uses an electronic variable speed motor control, which includes a line reactor to minimize power line harmonic currents. It is recommended that good wiring practices be followed to manage building electrical power system harmonic voltages and currents to avoid electrical system problems or other equipment interaction.*

Performance Boundaries

While the speeds of the fan motors can be adjusted, never program a fan speed higher than 1700 rpm, or lower than 450 rpm. In many cases, units configured for high-static operation will not achieve the desired rpm if the ESP of the unit is too low, or the unit is allowed to "free-discharge." The ECM engine contains settings that will limit the output power of the motor under these overload conditions. If the motors cannot achieve rpm close to the target for a specific period of time, the unit will disable electric heat and fan-status indicators.

MCA/MOP and Power Draw

The Trane BLDC motors have variable output but are shipped at specific settings to deliver proper performance and reliability. The power draw indicated in the catalog indicates the power consumed when applied properly (as shipped and with the nominal ESP applied). However, the nameplate of the unit indicates the maximum input draw of the motor, as the motor settings can be changed to draw more power.

Troubleshooting Other Unit Functions

In some cases, the normal or abnormal operation of the BLDC system may interact with other components in the system. Generally, verification of the engine and adapter boards' wiring and configuration should be checked if there are unexplained abnormalities in other areas of the unit:

1. Valve operation
2. Electric heat operation
3. Entering water temperature sensor operation
4. Damper operation
5. Condensate overflow switch

A high degree of protection is provided on electric heat units. If electric heat fails to actuate, it may be because of one of the following events:

1. Fans are failing to meet target speed. If a second motor is not present, all settings for speeds for Motor 2 should be set to 0000.
2. Hot water may be available in the changeover coil.
3. The connection to analog input 1 on the Tracer® ZN controller may be reversed in polarity.
4. Target speeds for motors may be set too high:
   a. The FPru parameter may be set incorrectly.
   b. The A iPU parameter may be set incorrectly.

Pre-Installation

Jobsite Inspection

Always perform the following checks before accepting a unit:

1. Verify that the nameplate data matches the data on the sales order and bill of lading (including electrical data).
2. Verify that the power supply complies with the unit nameplate specifications.
3. Visually inspect the exterior of the unit, for signs of shipping damage. *Do not sign the bill of lading accepting the unit(s) until inspection has been completed. Check for damage promptly after the unit(s) are unloaded. Once the bill of lading is signed at the jobsite, the unit(s) are now the property of the SOLD TO party and future freight claims MAY NOT be accepted by the freight company.*

Jobsite Storage

This unit is intended for indoor use only. To protect the unit from damage due to the elements, and to prevent possible IAQ contaminant sources from growing.

1. Place the unit(s) on a dry surface or raise above the ground to assure adequate air circulation beneath the unit.
2. Cover the unit(s) with a water proof tarp to protect them from the elements.

NOTICE

Microbial Growth!

Failure to follow instructions below could result in odors and damage to the equipment and building materials.

The floor or foundation must be level and the condensate drain at the proper height for proper drainage and condensate flow. Standing water and wet surfaces inside the equipment can become an amplification site for microbial growth (mold). If there is evidence of microbial growth on the interior insulation, it should be removed and replaced prior to operating the system.

3. Make provisions for continuous venting of the covered units to prevent moisture from standing on the unit(s) surfaces.
4. Do not stack units.

Dimensions and Weights

Unit Location and Clearances

Locate the unit in an indoor area. The ambient temperature surrounding the unit must not be less than 45°F. Do not locate the unit in areas subject to freezing.

NOTICE

Equipment Damage!

Failure to protect the unit from freezing could result in equipment damage. If fluid has been added to the piping, the unit must be protected from freezing. Freeze damage from an unheated equipment room is not the Trane company's responsibility. These are indoor units.

Attention should be given to service clearance and technician safety. The unit should contain enough space for service personnel to perform maintenance or repair.

Provide sufficient room to make water, and electrical connection(s).

⚠WARNING

Proper Field Wiring and Grounding Required!

Failure to follow code could result in death or serious injury.

All field wiring MUST be performed by qualified personnel. Improperly installed and grounded field wiring poses FIRE and ELECTROCUTION hazards. To avoid these hazards, you MUST follow requirements for field wiring installation and grounding as described in NEC and your local/state/national electrical codes.

A 36-inch clearance at the unit front is sufficient for maintenance and service of the equipment.

Table 3. Weights and measurements: horizontal unit ventilators

Unit Size	075	100	125	150	200
Unit Length (in.)	70-1/4	82-1/4	94-1/4	106-1/4	106-1/4
Unit Height (in.)	16-5/8	16-5/8	16-5/8	16-5/8	17-5/8
Unit Width (Front Discharge) (in.)	35-5/8	35-5/8	35-5/8	35-5/8	43-1/8
Unit Width (Bottom Discharge) (in.)	48-3/4	48-3/4	48-3/4	48-3/4	57-1/4
Shipping Weight (lb)[a]	340*	375*	435*	500*	600*
Filter Size (inches-actual)	41-1/2 x 15-1/4 x 1	53-1/2 x 15-1/4 x 1	65-1/2 x 15-1/4 x 1	77-1/2 x 15-1/4 x 1	77-1/2 x 15-1/4 x 1

(a) Working weight is approximately 10% less than shipping weight. Trane recommends 1/4-inch rods for hanging suspension

Table 4. Control methodology

	Fan Speed
CSTI	3 or infinite[a]
Thermostat	3
Tracer® ZN520	3
Tracer® UC400	Infinite

(a) With a field-supplied 2–10 Vdc controller.

Table 5. Control sequences

	Fan Speeds
DX operation[a]	1
Electric heat operation[a]	1

(a) Fan speed during sequence operation.

Figure 3. Horizontal unit ventilator with ducted front discharge dimensional data; sizes 075–150 (dimensions in inches)

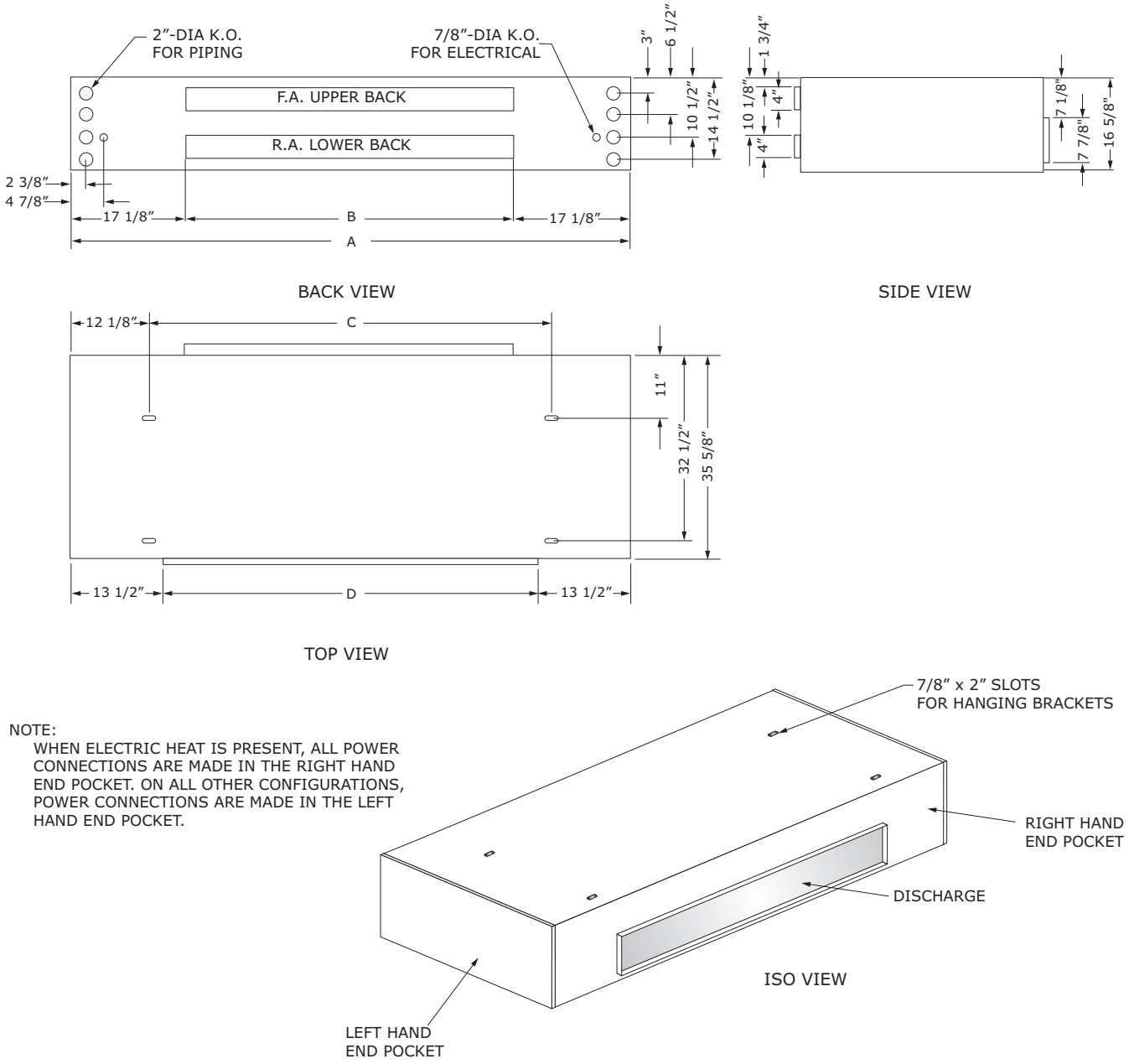

NOTE:
WHEN ELECTRIC HEAT IS PRESENT, ALL POWER CONNECTIONS ARE MADE IN THE RIGHT HAND END POCKET. ON ALL OTHER CONFIGURATIONS, POWER CONNECTIONS ARE MADE IN THE LEFT HAND END POCKET.

Size	A	B	C	D
75	70-1/4	36	46	43-1/4
100	82-1/4	48	58	55-1/4
125	94-1/4	60	70	67-1/4
150	106-1/4	72	82	79-1/4

Figure 4. Horizontal unit ventilator with ducted front discharge dimensional data; size 200 (dimensions in inches)

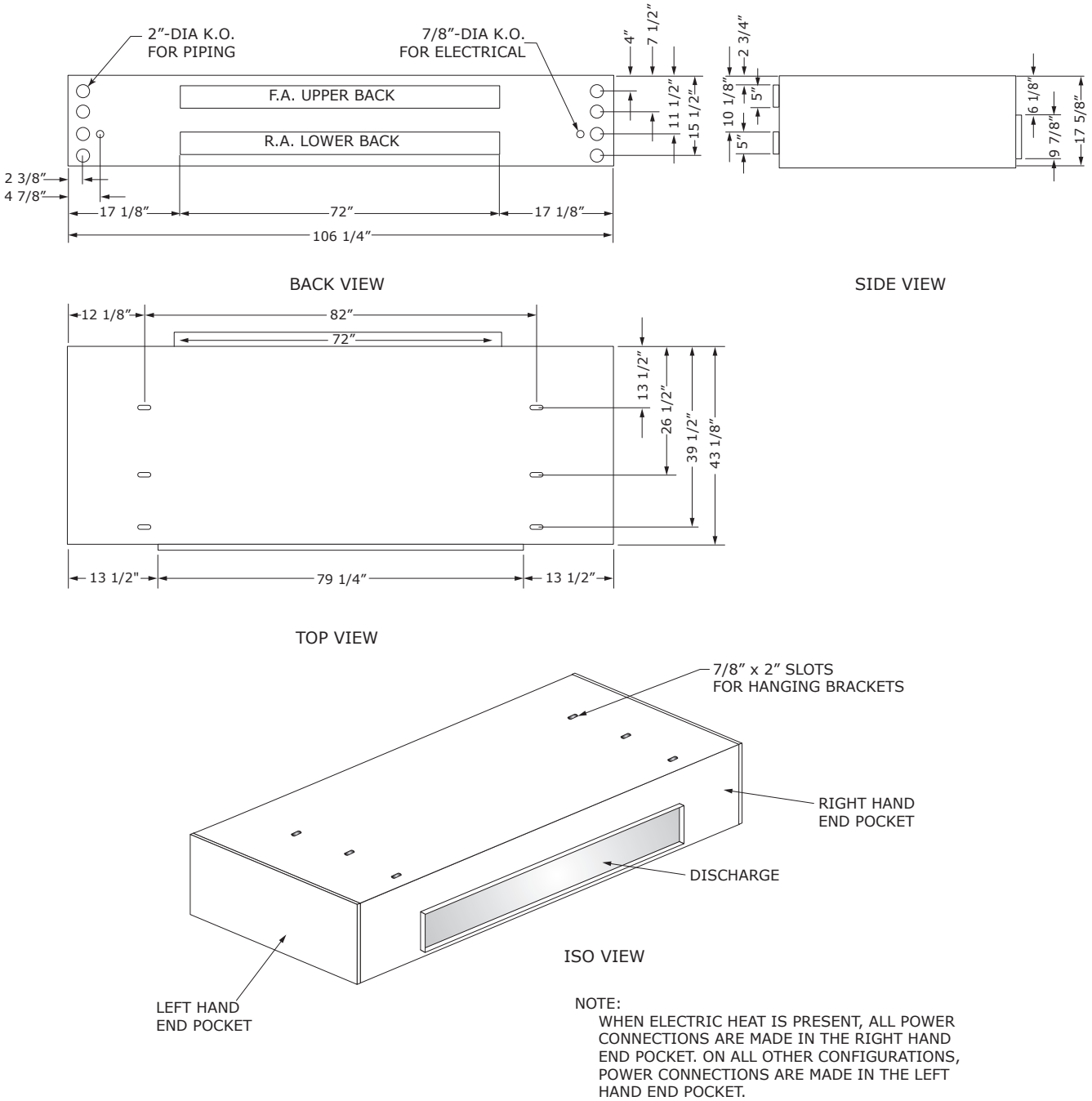

NOTE:
WHEN ELECTRIC HEAT IS PRESENT, ALL POWER CONNECTIONS ARE MADE IN THE RIGHT HAND END POCKET. ON ALL OTHER CONFIGURATIONS, POWER CONNECTIONS ARE MADE IN THE LEFT HAND END POCKET.

Figure 5. Horizontal unit ventilator with double deflection discharge dimensional data; sizes 075–150 (dimensions in inches)

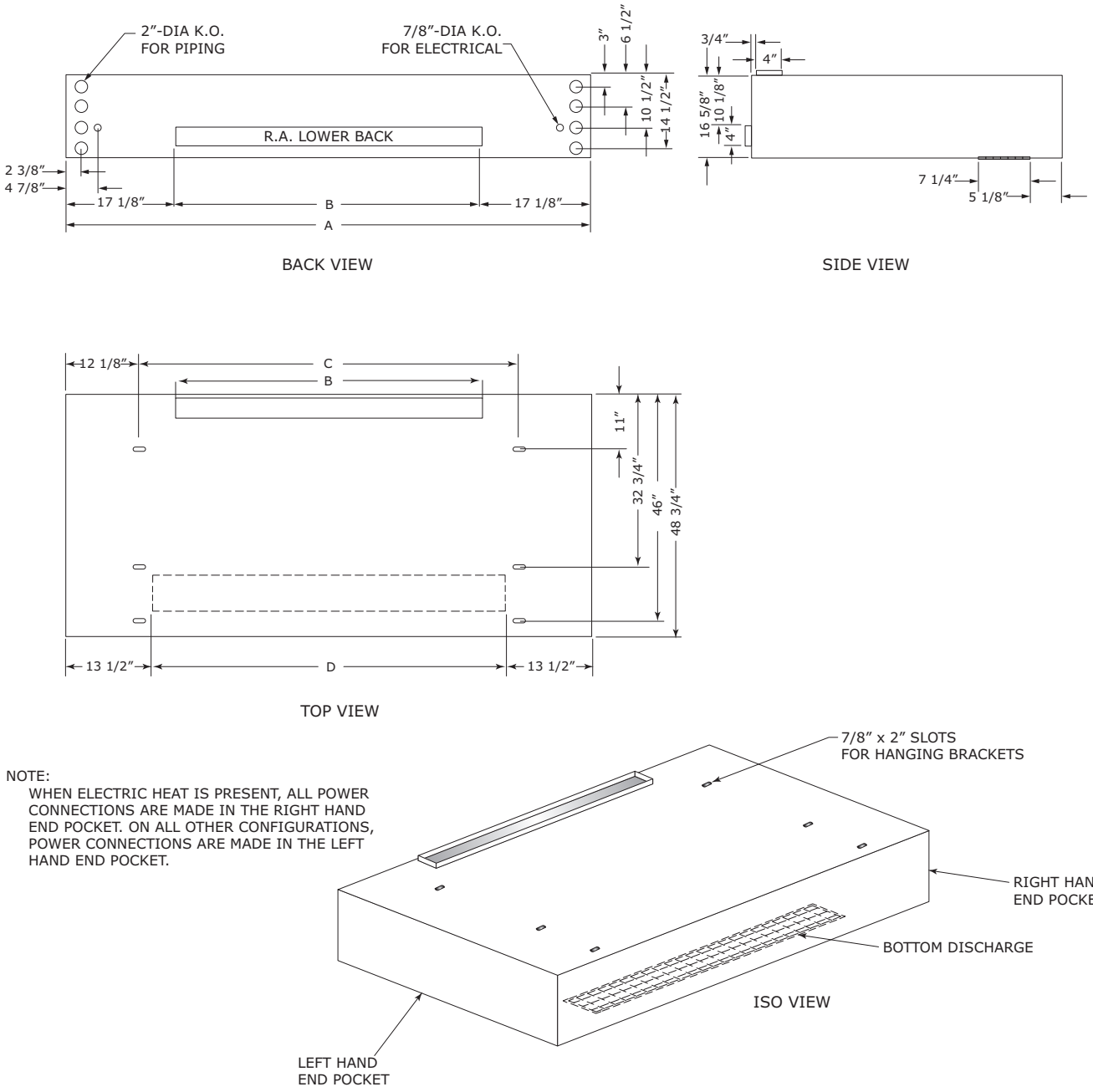

NOTE:
WHEN ELECTRIC HEAT IS PRESENT, ALL POWER CONNECTIONS ARE MADE IN THE RIGHT HAND END POCKET. ON ALL OTHER CONFIGURATIONS, POWER CONNECTIONS ARE MADE IN THE LEFT HAND END POCKET.

Size	A	B	C	D
75	70-1/4	36	46	43-1/4
100	82-1/4	48	58	55-1/4
125	94-1/4	60	70	67-1/4
150	106-1/4	72	82	79-1/4

Figure 6. Horizontal unit ventilator with double deflection discharge dimensional data; size 200 (dimensions in inches)

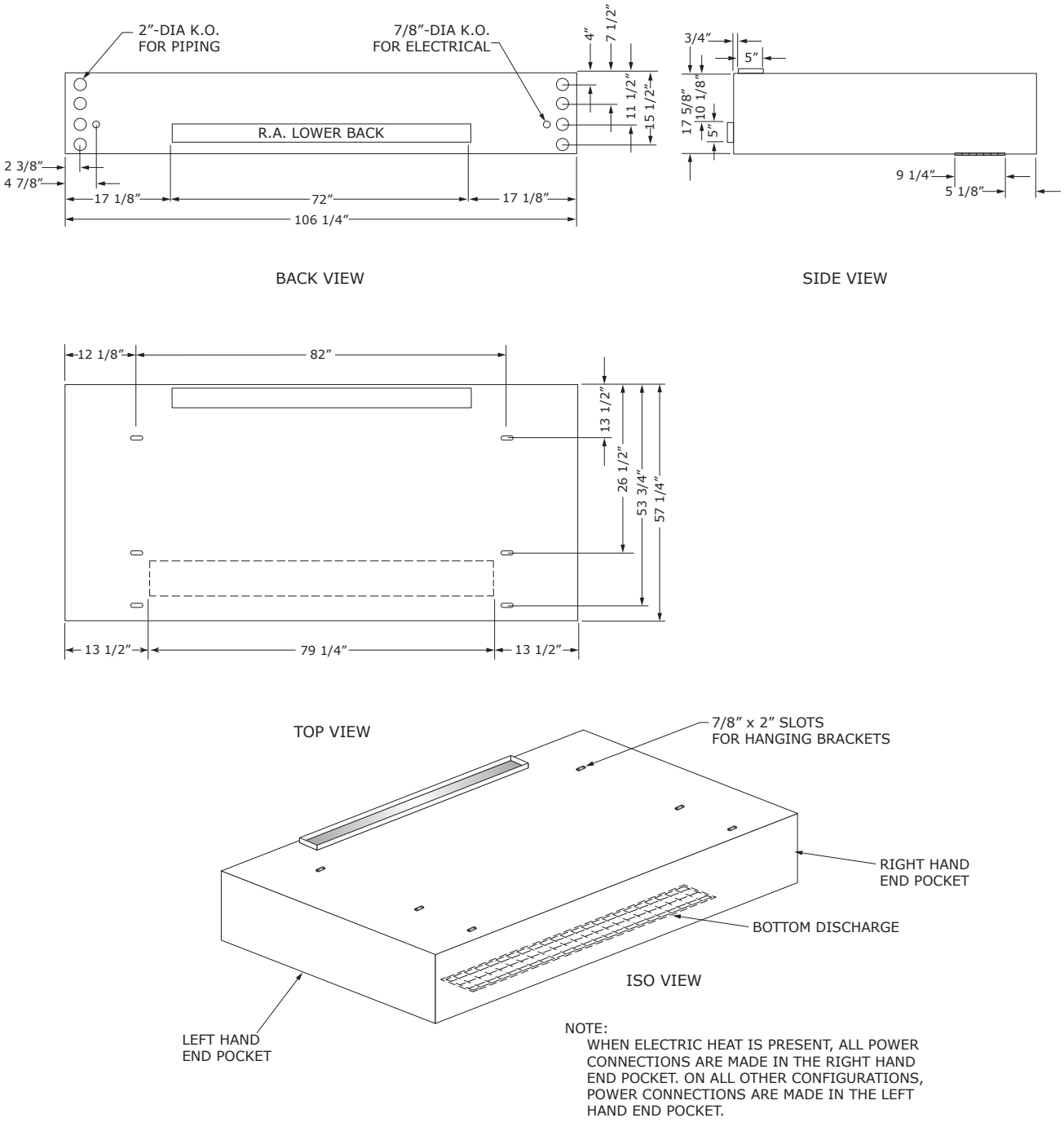

Figure 7. Supply/return air arrangements for the horizontal unit ventilator

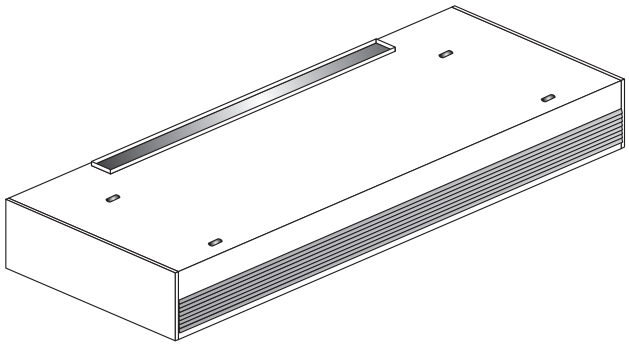

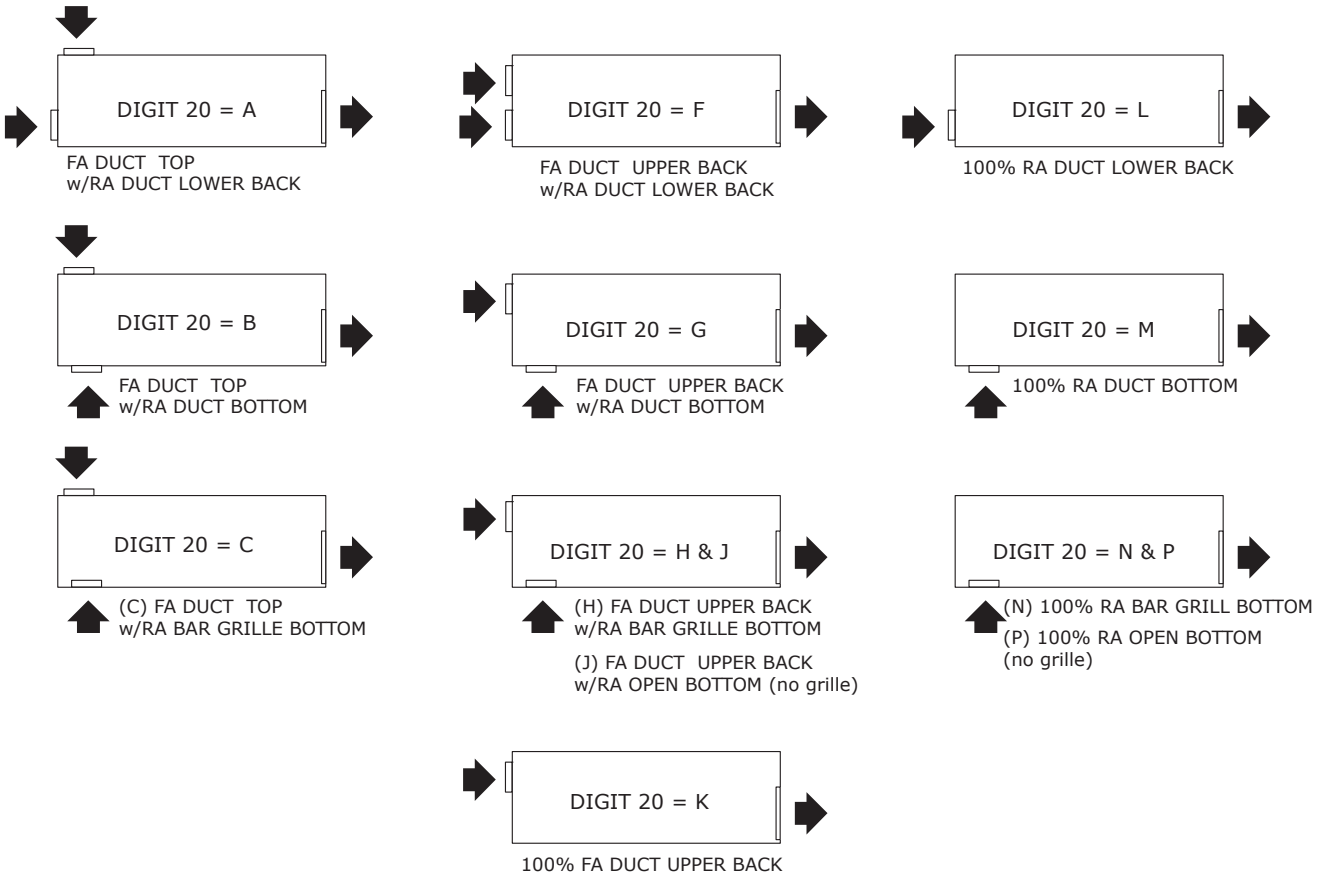

Installation - Mechanical

Location Considerations

Selecting the appropriate location for installing a unit is very important. The following factors should be considered:

1. Ceiling hung design must be of sufficient structure to support the weight of the unit (refer to typical unit weights table). Figure 3, p. 14 through Figure 7, p. 18 show hanging rod location and placement.

   Note: *Isolator and suspension rods are to be provided by the installer. For hanging suspension, Trane recommends 3/8-in. rods.*

Table 6. Typical unit weights[a]

Unit Size	lb	kg
075	340	154
100	375	170
120	435	197
150	500	227
200	600	272

(a) Weight at time of shipping. Subtract approximately 10% for actual hanging weight.

2. Service access is gained through the access panels on the bottom of the unit. Sufficient space should be allowed for panel removal. If the hinged panel option is ordered, allow for a swing radius of 14-in.
3. Sufficient free area around both the discharge and wall box should be maintained to ensure proper ventilation. If any part of the discharge is blocked off, unit performance may be affected. If the wall box is too small on the inlet, water or debris could be pulled into the unit (see the following table for minimum wall box free area requirements).

Table 7. Wall box free area requirements

Unit Size	Discharge (in^2)	Inlet (in^2)
075	232	169
100	296	217
120	364	265
150	430	313
200	576	391

4. Use the shortest and most efficient ductwork possible when ducting the discharge and/or return air grille. Units ordered with a duct collar discharge arrangement are equipped with a 1-in. duct flange.

   Note: *Ductwork for ducted units will be provided by the installer.*

5. If installing a split system, refer to the condenser installation instructions provided with that unit for special location considerations.

Note: *Measurements in Figure 3, p. 14 through Figure 7, p. 18 do not include adjusted leveling legs. Adjustment of leveling legs should be done first. New measurements from the floor should be retaken before installation.*

Unit Mounting

The horizontal unit ventilator may be attached directly to the ceiling or suspended from the ceiling by hangers. Hanger rods should be at least 3/8 in. diameter steel to support unit weight.

⚠WARNING

Heavy Objects!

Failure to properly lift the unit as instructed, could result in death or serious injury. Always lift unit with fork trucks or other special lifting device following the recommended procedures.

Install the hanging devices before hoisting the unit. A fork lift or other special lifting device is required to hoist the unit into mounting position.

Protect the unit finish by covering the lifting platform.

To hoist the unit into place, follow the instructions below:

1. Secure 2 x 4s to the lift forks. These two supports must be long enough and spaced properly on the forks to support the unit while it is being lifted and clear the duct flanges on the unit.
2. Tip the unit onto the supports and slide it toward the lift until the unit weight balances.
3. Lift the unit. Once in position, temporarily secure the unit to the hanger rods or mounting studs with nuts and washers.
4. Align the unit with the duct work. When in proper alignment, tighten the mounting nuts securely.
5. Recheck the unit alignment and make sure the unit is level.
6. Replace all covers, panels and filters before starting the unit.

Note: *Unit must be mounted level. Coils and drain pans inside unit are pitched properly for drainage before shipment.*

Horizontal Recessed Mounting

The recessing flange assembly ships in a box separate from the unit. The assembly includes pre-cut flanges, corner transition pieces, mounting screws, filler pieces, and pressure sensitive gaskets. Refer to the following figures for typical horizontal installation.

Figure 8. Recess flange installation around horizontal unit ventilator access panel and inlet

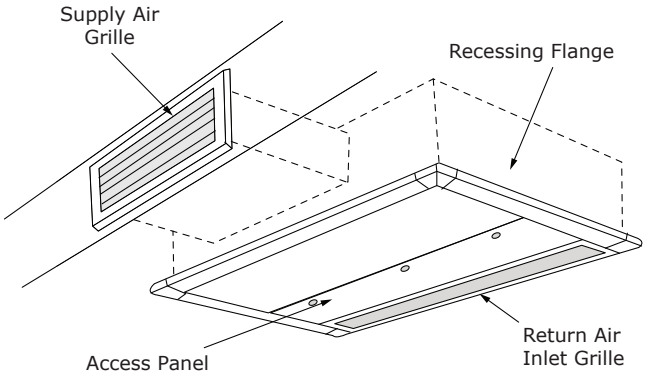

Figure 9. Recess flange installation around bottom and front of horizontal unit

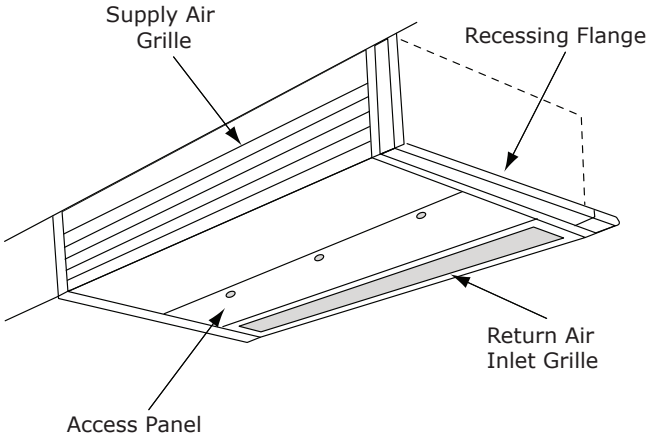

1. Measure and cut the pressure sensitive gaskets to the correct lengths and attach to the flanges.
2. Starting at a corner, attach the top flange with the mounting screws provided.
3. Press the corner transition pieces onto the end of the flange and attach the adjoining flanges and filler pieces at the bottom of the unit. Work around the unit in this manner until all flanges and corners are installed.
4. Mounting holes are pre-drilled in the flanges. Use the assembled flanges as a template to drill all 7/32-in. mounting holes in the cabinet.
5. Attach the flange section to the unit cabinet with the mounting screws provided.
6. Open and remove the front access panel.
7. Tighten the mounting fastener, making sure that the unit is level.
8. Open the unit access panel and remove the bottom front panel.

Figure 10. Horizontal unit ventilator with front panel removed

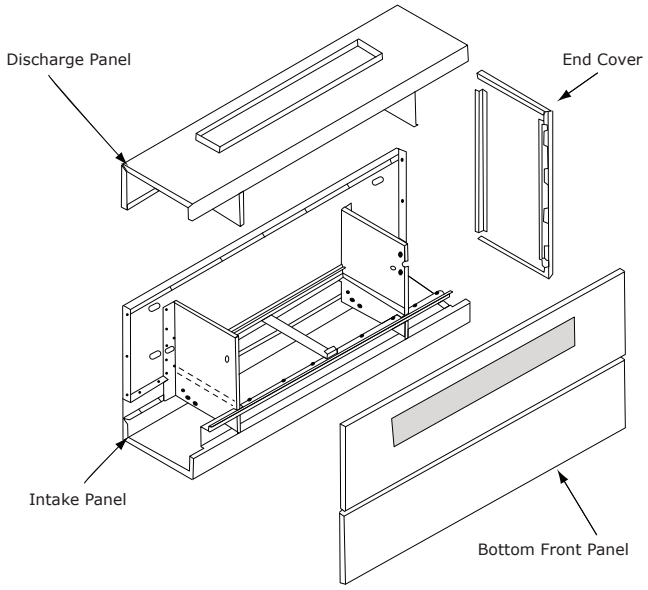

9. Hoist the unit onto a forklift and mount in place as described previously, ensuring the unit is secured and aligned in place, and that the mounting nuts are tightly fastened.

   Note: *Unit must be mounted level. Coils and drain pans inside the unit are pitched internally for proper drainage.*

10. Replace all covers, panels and filters before starting the unit.

Coil Piping and Connections

The coil headers and drain connections are made within the unit chassis to allow a tight seal and help prevent air leakage around the coil. The connection sizes vary dependent upon type of coil combination specified.

Piping Packages

Control valves are mounted in all factory piping packages. All piping packages are factory installed and come in a variety of options:

- **Basic**: Union and shut-off ball valve on the supply line. Union, control valve and shut-off ball valve on the return line.
- **Basic with manual circuit setter**: Union, shut-off ball valve on the supply line. Union, control valve and manual circuit setter on the return line.
- **Deluxe with manual circuit setter**: Union, strainer, P/T port, and shut-off ball valve on the supply line. Union, control valve and manual circuit setter on the return line.
- **Deluxe with auto flow**: Union, strainer, P/T port, and shut-off ball valve on the supply line. Union, control valve, auto flow valve, P/T port and shut-off ball valve on the return line.

Figure 11. Coil piping chart

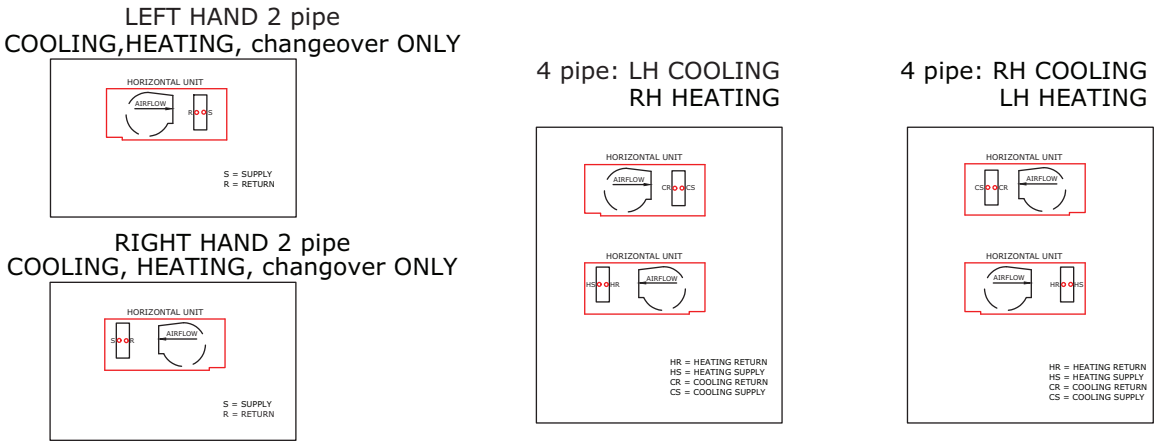

Figure 12. Piping package layout

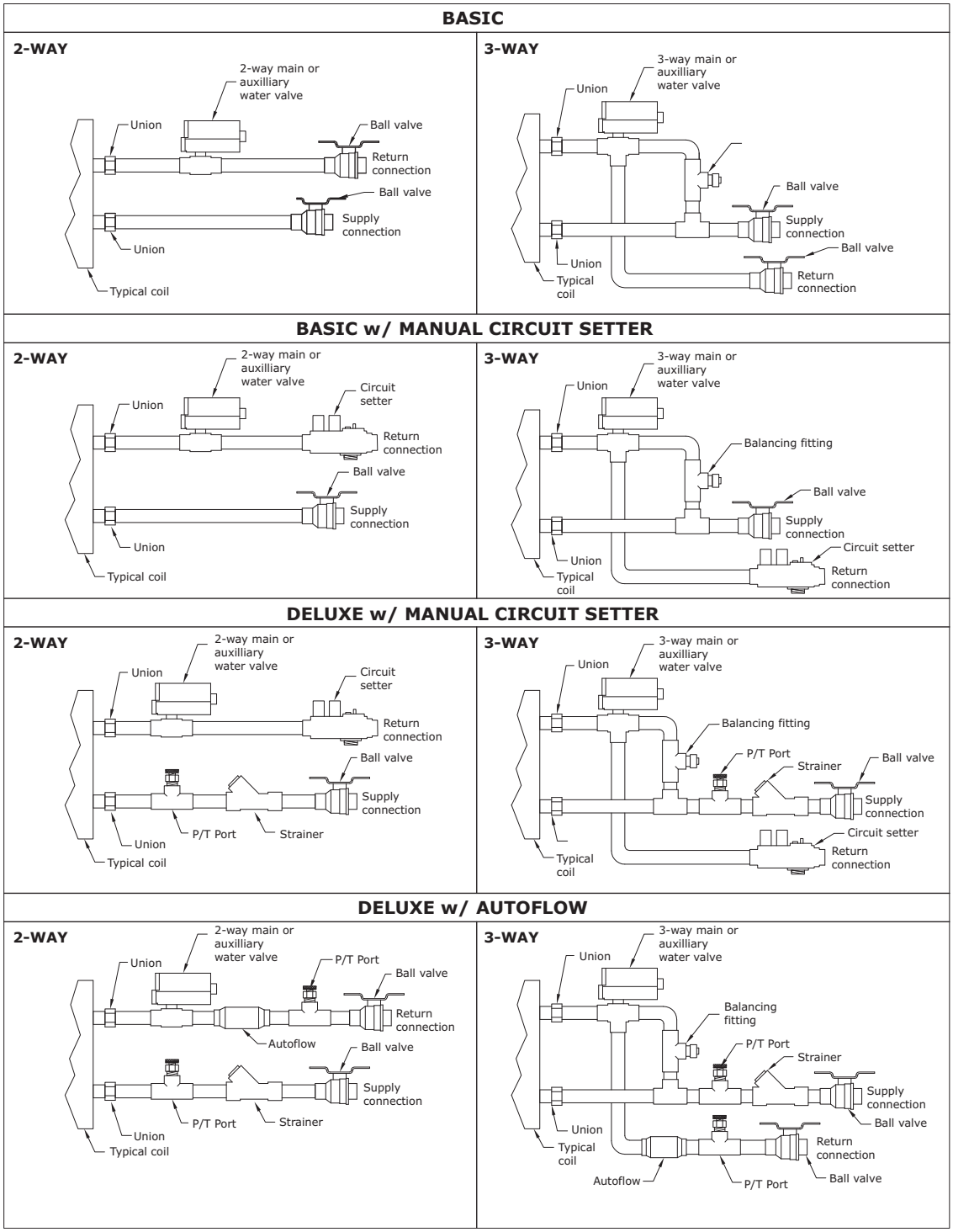

Note: *Before installation of piping package, the shipping bracket holding the piping in place, must be removed.*

All union connections should be tightened in the field. Units are shipped with union connections hand-tightened only in the factory.

Proper installation of piping is necessary to provide efficient coil operation and to prevent damage during operation. Follow standard piping practices and include all accessories as necessary.

Piping connection knockouts are shown in Figure 3, p. 14 through Figure 7, p. 18. Field connection types and sizes for units without piping packages are listed below.

Table 8. Coil data for field piping

Coil Type	Connection Location	Field Connection Size
4-pipe chilled water / hot water	Left or right (opposite ends)	7/8 in. OD / 5/8 in. OD
2-pipe changeover coil	Left or right	7/8 in. OD
Hot water only	Left or right	7/8 in. OD
Steam	Left or right	1 in. FPT
Chilled water / electric heat	Left cooling	7/8 in. OD
Chilled water / steam	Left or right	7/8 in. OD / 1 in. FPT
DX	Left	7/8 in. suction, 3/8 in.
DX / hot water	Left cooling / right heating	7/8 in. suction, 3/8 in. / 5/8 in. OD
DX / steam	Left cooling / right heating	7/8 in. suction, 3/8 in. / 1 in. FPT
DX / electric heat	Left cooling / right heating	7/8 in. suction, 3/8 in. / NA

A 3/4-in. OD condensate drain connection is provided on the chilled water supply end of the unit. Attach a flexible condensate drain hose over the drain pan connection and secure with a hose clamp.

Figure 13. Condensate drain pan location

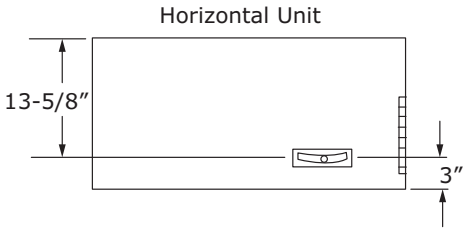

The drain pan on the horizontal unit is internally pitched. To field reverse, remove the screws and drain pan, rotate the pan and reinstall.

After the condensate drain piping has been completed, check water flow to be sure the system properly carries and away all condensate accumulation.

A P-trap is recommended for installations that drain directly into a sewer system. A P-trap is not necessary for operation but will eliminate sewer gas door.

Notes:

- *All connections made in the field should be sweat connections.*
- *Piping packages are not shipped insulated. Any insulation should be provided in the field by the installing contractor.*

Valve and Actuator Operation

- NO and NC actuators are different parts. The 7.4 Cv 3-way actuator is spring return. All the other 2-position actuators are capacitor discharge return.
- Valves can be interchanged among the different actuator types.
- All actuators are clockwise to close and counterclockwise to open with wire harness facing you and looking at the top of the actuator.

Valve Stroke Time

Table 9. Valve stroke time

Valve Selection	End Stop Position	Stroke Time (Seconds)
1/2 in. 2-way Modulating Valve, 1.4 Cv	No end stop	75
1/2 in. 2-way Isolation Valve, 2.4 Cv	5	55
1/2 in. 2-way Modulating Valve, 3.4 Cv	6	62
1/2 in. 2-way Modulating Valve and 2 Position Valve, 4.8 Cv	N	68
1/2 in. 2-way Modulating Valve, 5.9 Cv	No end stop	75
3/4 in. 2-way Modulating Valve and 2 Position Valve, 2.3 Cv	4	49
3/4 in. 2-way Modulating Valve, 3.3 Cv	5	55
3/4 in. 2-way Modulating Valve and 2 Position Valve, 4.6 Cv	6	62
3/4 in. 2-way Modulating Valve, 6.6 Cv	N	68
1/2 in. 3-way Modulating Valve and 2 Position Valve, 2.7 Cv	No end stop	75
3/4 in. 3-way Modulating Valve, 4.6 Cv	No end stop	75
3/4 in. 3-way Modulating Valve and 2 Position Valve, 7.4 Cv	N/A	90

Balancing Manual Circuit Setter Valve

The manual circuit setter valve is an optional end valve supplied on the return pipe of the factory piping package. The valve allows the operator to regulate water flow through the hydronic coil, balance the water flow through the unit with other units in the piping system, and serves as a shutoff or end valve. See the figure below.

Figure 14. Manual circuit setter valve

Perform the following procedure to set maximum water flow through the coil:

1. Establish water flow through the coil. Perform an open override of the valve if the control valve is closed to the coil, either manually or by Tracer®.

   If the piping package has two-position, normally closed valves: Drive open the valve using a 24 V signal.

   If the piping package has two-position, normally open valves: Manually drive open the valve by removing power to the valve.

   If the piping package has modulating valves: To manually drive the valve open, lift off the actuator and turn the valve stem. Actuator can be used to turn the valve stem.
2. For presetting, use the appropriate valve curve shown in Figure 15, p. 24 to determine which setting is necessary to achieve the appropriate pressure drop.
3. Carefully remove the Schrader pressure port connection caps on the manual circuit setter, since they will be at the same temperature as the pipeline.
4. Bleed all air from the hoses and meter before reading the pressure drop. Refer to the gauge operating instructions.
5. Adjust the circuit setter valve by turning the valve stem until the appropriate pressure drop is achieved.
6. After achieving the proper setting, slightly loosen the two socket head cap screws and rotate the memory stop around until it touches the back side of the indicator. Then tighten the screws to securely set the open memory position. The memory stop indicates the last set open position.
7. If using a three-way valve: close the control valve to the coil, with the differential pressure meter still connected. This will divert flow to the bypass side of a three-way valve.

Adjust the balancing fitting to obtain the same pressure drop across the circuit setter valve as in step two when the control valve was open to the coil.

Figure 15. Manual circuit setter valve, differential pressure vs. flow - 1/2"

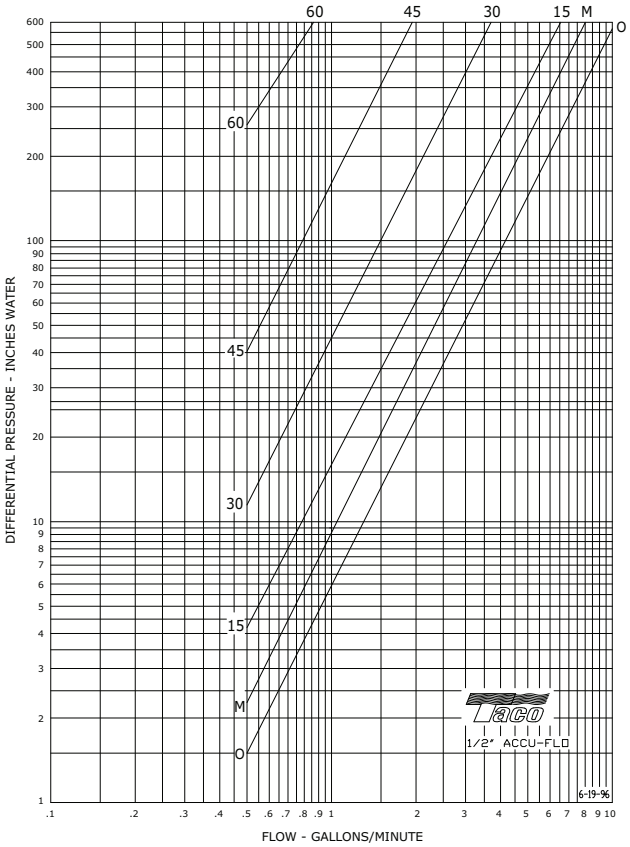

Note: *Instructions for using this chart appear on the preceding page. For the manual circuit setter provided the unit, use the 'M' curve.*

Figure 16. Manual circuit setter valve, differential pressure vs. flow - 3/4"

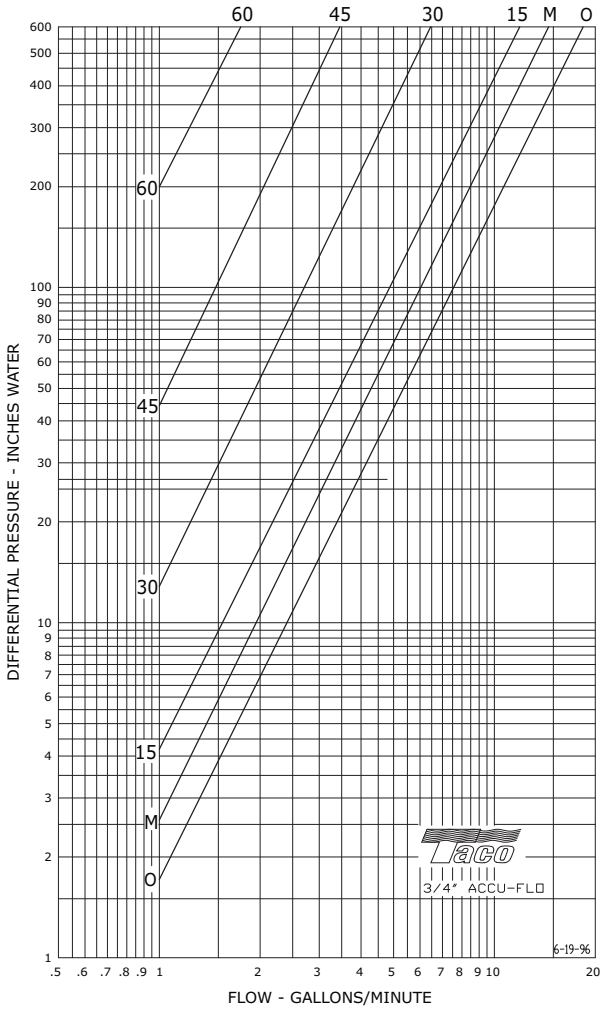

Note: *Instructions for using this chart appear on the preceding page. For the manual circuit setter provided the unit, use the 'M' curve.*

Split System Units

The following refrigerant piping and interconnecting wiring instructions apply to unit ventilators with direct expansion type cooling coils used in conjunction with air-cooled condensing units. Reference must also be made to the condensing unit installation and wiring manuals which are shipped with the condensing unit.

Note: *A UL listing mark applied to a unit ventilator does not apply to any associated refrigerant condensing unit.*

Refrigerant Piping

⚠WARNING

Explosion Hazard and Deadly Gases!

Failure to follow all proper safe refrigerant handling practices could result in death or serious injury.

Never solder, braze or weld on refrigerant lines or any unit components that are above atmospheric pressure or where refrigerant may be present. Always remove refrigerant by following the guidelines established by the EPA Federal Clean Air Act or other state or local codes as appropriate. After refrigerant removal, use dry nitrogen to bring system back to atmospheric pressure before opening system for repairs. Mixtures of refrigerants and air under pressure may become combustible in the presence of an ignition source leading to an explosion. Excessive heat from soldering, brazing or welding with refrigerant vapors present can form highly toxic gases and extremely corrosive acids.

Unit ventilators with direct expansion cooling are dehydrated and shipped with a dry air holding charge. Connections are "pinched off" at the factory.

To connect the condensing unit lines, cut off the stubouts and swage. The condensing unit lines can then be brought into the swage and brazed. Trane recommends the use of nitrogen purge when brazing refrigerant lines to prevent formation of oxides in the lines.

Install the refrigerant suction and liquid lines as described in the condensing unit installation instructions. The thermal expansion valve (TXV) is factory-installed on the Unit Ventilator.

Note: *The R-410A direct expansion (DX) refrigerant coil includes a factory-mounted adjustable thermal expansion valve (TXV) set to 90 psig superheat and an equalizing tube.*

Piping should be run straight out through the back of the unit. Access piping knockouts are located in the rear panels of the unit, as shown in Figure 3, p. 14 through Figure 7, p. 18.

Recommended refrigerant line connections for various unit combinations are given in Table 7, p. 19. Typical Superheat Charging Charts are shown in the Trane Service Facts. Refrigerant charge weights can also be determined with your local Trane account manager using a valid Trane Selection Program.

Steam Piping

When air, water or another product is heated, the temperature or heat transfer rate can be regulated by a modulating steam pressure control valve. Since pressure and temperature do not vary at the same rate as load, the steam trap capacity, which is determined by the pressure differential between the trap inlet and outlet, may be adequate at full load, but not some lesser load.

There are detailed methods for determining condensate load under various operating conditions. However, in most cases this is not necessary if the coils are piped as shown below. Follow the procedure documented in the ASHRAE Systems Handbook, Steam Systems.

Figure 17. Steam piping

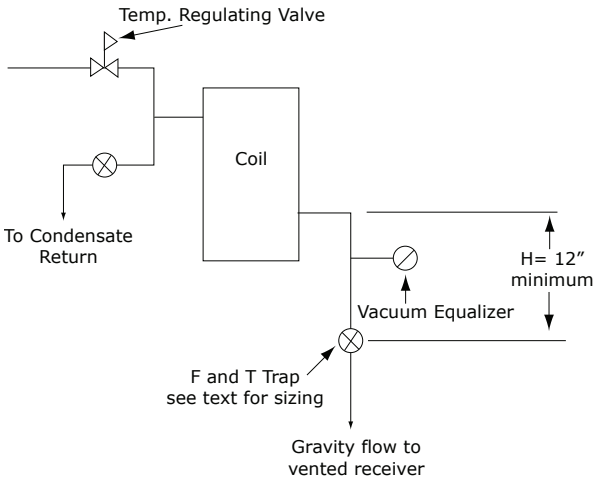

Modulating Steam Valves

An optional 2-way modulating steam valve can be selected with steam coils. The valve is field installed. When plumbing the valve, the AB port must be connected to the coil.

Figure 18. Belimo steam

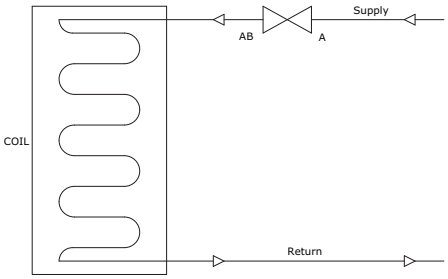

Note: *The actuator must be mounted between 0 and 45 degrees from horizontal. Do not install with actuator below pipe.*

Figure 19. Steam valve orientation

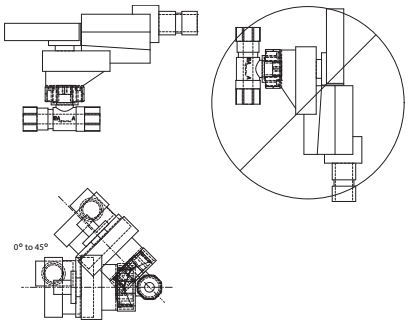

Note: *The actuator must be removed when soldering near the valve. High heat may cause damage to the actuator's plastic body/mechanisms. The actuator can be removed from the valve by loosening the bolt going through the top of the actuator. When reinstalling the actuator, do not overtighten. Tighten bolt to 13.5 in-lb.*

Figure 20. Exploded valve assembly

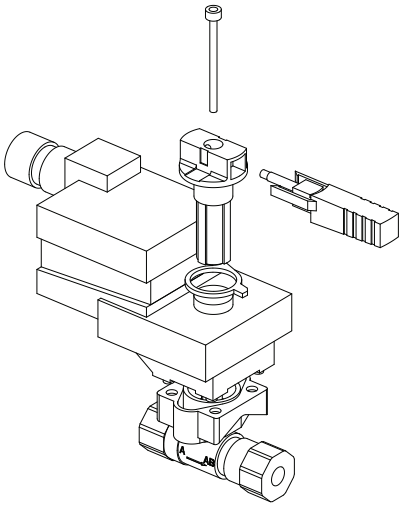

Figure 21. Wiring for modulating steam valve actuator

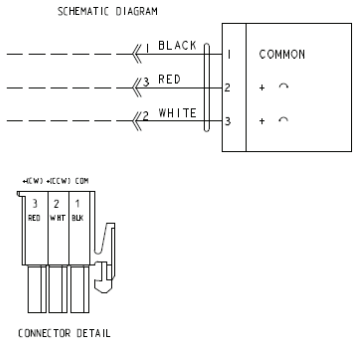

Installation - Controls

Control Options

Available control options:

- Customer-supplied terminal interface (CSTI)
- Thermostat
- Tracer® ZN520 controller
- Tracer® UC400-B controller with Air-Fi® Wireless Communications Interface

Customer Supplied Terminal Interface (CSTI)

Figure 22. CSTI adapter board

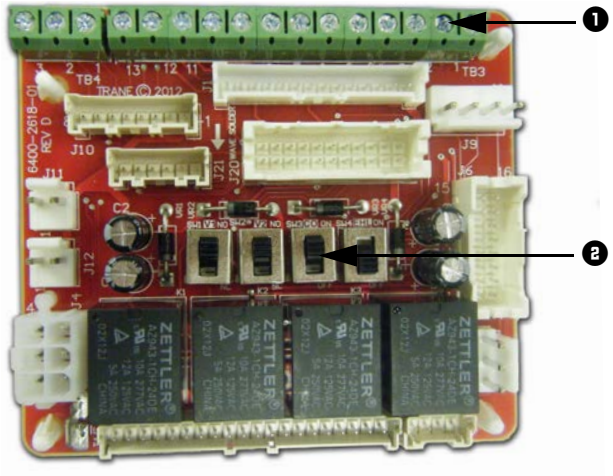

1. Customer Low-Voltage Interface for Valves, Electric Heat, Dampers, Fan Speeds, Variable Fan Speed, and 24 Vac Supply
2. Valve(s), Electric Heat, and Changeover Configuration Switches (Factory-Set)

- Performs all the functions of the standard adapter module, but in addition, provides convenient field connections to factory mounted end devices, including:
  - Valves
  - Dampers
  - Electric Heat
- Performs courtesy "inversion" of thermostatic inputs to match selected valves:
  - Standard thermostats put out only "on" signals, however customer may select a normally open valve. A selectable switch allows the customer to invert the thermostat outputs for correct operation. These switches are set at the factory, but can be adjusted in the field.
  - Sophisticated changeover function when used with a thermistor, that replaces traditional bi-metallic disc temperature switches:
- Board will automatically honor only the appropriate customer request (Heat/Cool) depending on sensed water temperature.
- Feature can be enabled or disabled with a selector switch—however, it is set correctly at the factory, based on customer choice of coil.
- The bi-metallic disc temperature switch emulation is programmable, and dead-band range can be adjusted.
- Electric heat lockout circuits and fan proving circuits for electric heat are standard, and are pre-configured at the factory.

Standard Adapter Board

Figure 23. Adapter board

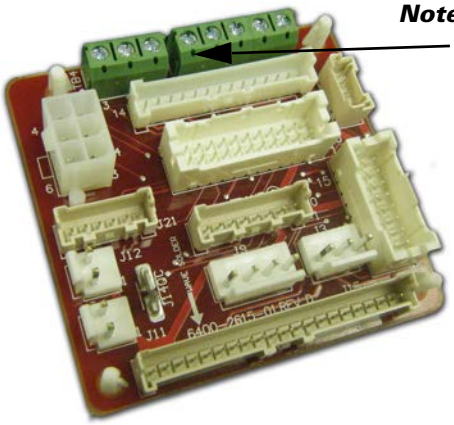

Note: *Customer Low-Voltage Interface for Fan Speeds, Variable Fan Speed, and 24 Vac Supply*

- The adapter allows direct customer interfacing through the use of terminal strips. Standard interfacing includes:
  - Fan Speeds (H, M, L) (for wall mounted fan speed switches)
  - Variable speed (0–10V) inputs
- The standard adapter board eliminates many separate wiring harnesses in the panel and allows simple, mistake-proofed single-plug interfacing of:
  - The ECM engine controller
  - Transformers
  - Motors
  - Valves
  - Dampers
  - Electric heat control
  - Fan speed switches
  - Main Power (except electric heat).
- Electric heat lockout circuits and fan proving circuits for electric heat are standard, and are pre-configured at the factory.

Standard Adapter Board Field Connections

Figure 24. Standard adapter board field connections

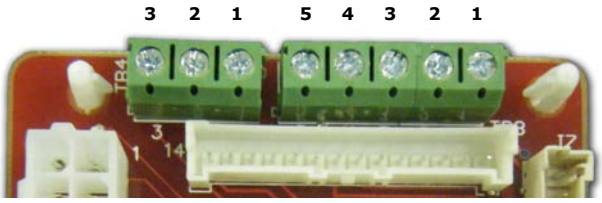

1. VSP 10V
2. VSP 0–10V
3. VSP DC COM

1. 24 Vac Y (gnd)
2. 24 Vac B (com)
3. High
4. Medium
5. Low

All customer connections to the two adapter boards are made to the terminal strips on both adapter boards.

Screw terminal blocks provide convenient access to fan controls for High, Medium, Low, and Variable speed. In addition, a courtesy 10 Vdc supply is provided for use with an external potentiometer or rheostat. The 10 Vdc supply supports up to 10 mA draw.

TB3 (right five positions) is normally used to provide 24V hookup to a wall mounted fan speed switch, and to accept the returns from the switch for High, Medium, and Low requests.

TB4 (left three positions) is normally used to control the system with a 0–10 Vdc output from a thermostat/controller, or a fan control rheostat/potentiometer.

The terminal block functional assignments and polarity are shown for reference only, and the schematics that ship with each unit should be consulted before wiring. Wiring assignments are configured for each unit.

CSTI Adapter Board Field Connections

Figure 25. CSTI adapter board field connections

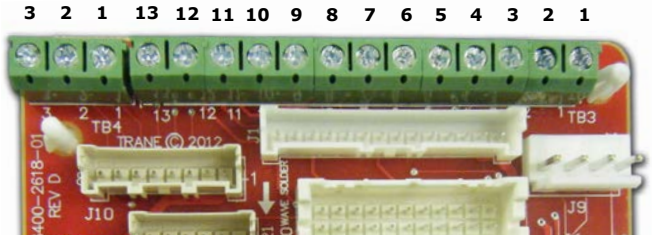

1. VSP 10V
2. VSP 0–10V
3. VSP DC COM

1. 24 Vac Y (hot)
2. Damper Open
3. 24 Vac Y (gnd)
4. High
5. Medium
6. Low
7. V1Op/Cooling
8. Not used
9. Not used
10. V1C1 (not std)
11. V2Op/EH1St/Heating
12. V2C1/EH2St (not std)
13. Dmp CI (not std)

The CSTI adapter board provides all the hookups of the standard adapter board, but in addition provides hookups for valve control (main and auxiliary coils), electric heat control and damper control.

Screw terminal blocks provide convenient access to fan controls and to end device control. In addition, a courtesy 10 Vdc supply is provided for use with an external potentiometer or rheostat. The 10 Vdc supply supports up to 10 mA draw.

TB3 (right 13 positions) is normally used to provide:

1. 24 Vac supply to a wall fan speed switch or
2. 24 Vac supply to a field-installed unit-mounted controller, or a wall-mounted controller or thermostat
3. Inputs (returns) for thermostatic fan control: High, Medium, and Low
4. Inputs (returns) for cooling/heating requests
5. Inputs (returns) for electric heat requests
6. Inputs (returns) for damper operation requests

TB4 (left three positions) is normally used to control the system with a 0–10 Vdc input from a thermostat/controller with a variable speed output, or a fan control rheostat.

The terminal block functional assignments and polarity are shown for reference only, and the schematics that ship with each unit should be consulted before wiring. Wiring assignments are configured for each unit.

Adjustment and Configuration of the CSTI Adapter Board

⚠CAUTION

Burn Hazard!

If SW4 is turned off, the factory/customer controller/thermostat will be able to actuate the electric heat while hot water is available or if the fans have failed. This switch should NOT be turned off if the unit schematic indicates that it should be on, to prevent overheating of the unit (due to simultaneous electric heat and hydronic heat actuation, or failure of the fan) and to use the preferred hydronic heating over electric heat. Failure to follow this instruction could result in the unit overheating and becoming hot to the touch, which could result in minor or moderate injury, and/or equipment damage.

For CSTI units, the board mounted switches have to be set appropriately to enable the desired functionality.

Figure 26. CSTI adapter board: board-mounted switches

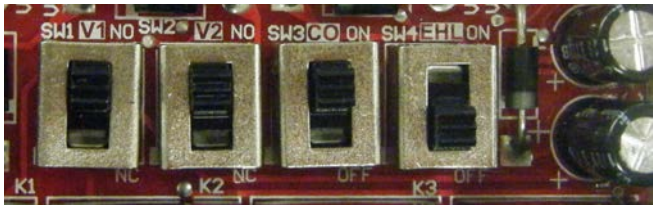

Table 10. CSTI adapter board: switch functions

Switch (L-R)	SW1	SW2	SW3	SW4
Function	Valve one operation logic	Valve two operation logic	Changeover Function	Electric Heat / Fan Proving Function
UP position (towards terminal strip)	Normally Open Valve	Normally Open Valve	Changeover Function ON	Electric Heat / Fan Proving Function
DOWN position (towards black relays)	Normally Closed Valve	Normally Closed Valve	Changeover Function OFF	Electric Heat / Fan Proving Function

Notes:

- *All switches are factory-set based on customer configuration of the unit model number. The unit will function correctly as shipped; however, the switch functions and positions are depicted for customer convenience and for service and troubleshooting aids.*
- *SW3 and SW4 work in conjunction with settings on the ECM engine controller. Simple activation of changeover and electric heat lockout function may not work correctly unless the ECM engine board is configured to perform these functions.*
- *Customers are advised to locate the changeover coil temperature sensor on the bypass line if possible, to avoid measuring standing water temperature.*
- *If a 4-pipe unit with changeover function is selected, the heating input will drive the main coil if hot water is detected, but will always drive the auxiliary coil or electric heat (where available).*
- *Where electric heat is available with a changeover coil, the electric heat is factory-configured to be deactivated if there is hot water available and if there is a fan failure.*

The CSTI board comes with courtesy valve inversion relays that allow both normally open and normally closed two-position valves to be used with simple thermostats that do not have the configurability to adapt to the customer choice of valves. Independent switches, SW1 and SW2, are provided for 2-pipe or 4-pipe units, or 2-pipe units with an optional reheat coil. The functions of SW1 and SW2 is downstream of the changeover function (SW3 and ECM engine board). Decisions made by the changeover circuits will be flowed to the inversion circuits, if they are selected.

SW3 enables or disables the changeover function for 2-pipe changeover coil units, or 4-pipe units where the coil has both a heating/cooling circuit and a heating circuit piped internally. If SW3 is turned off, the changeover function will be disabled, and the unit will then be configured as a cooling only coil, a heating only coil, or a combination of cooling only/heating only coil. Thus, customer cooling requests will drive the main valve, and heating requests will drive the auxiliary valve.

The changeover function is designed to work with customer controllers that request heating or cooling (based on customer request), but have coil water temperatures that are "changed over" from heating to cooling (or cooling to heating) depending on the season and the building equipment available. Customer thermostats MUST be hooked to the correct terminal strip locations (V1 and V2) for the changeover function to work.

Cooling

In general, the (CSTI) changeover function will provide cooling if:

1. A unit is factory configured with a changeover coil (cooling/heating) as the only coil or as the main coil portion.
2. SW3 on the CSTI adapter board is turned on, and the FPrU parameter set to EHL or EhFS to use the changeover functions.
   a. EhL parameter should be chosen if the unit has a changeover coil without electric heat.
   b. EhFS parameter should be chosen if the unit has a changeover coil with electric heat. Generally, this will perform the same as the EhL parameter but will in addition, disable the heating function on electric heat and on the changeover coil heat if there are fan failures. The auxiliary heating coil valve will continue to respond to customer heating requests.
3. The ECM engine has sensed that there is cold water available on the supply/bypass line for the changeover coil. In this case, "cold" water is inferred by the ECM engine if:
   a. A 10K NTC thermistor (similar to Trane part number X13790374010) is wired properly to the engine board, through the crossover cables and CSTI adapter boards.
   b. The input impedance of the thermistor circuit must be set correctly (the A iPU parameter should be set to in for CSTI units).
   c. The temperature sensed is lower than the A i2Ti parameter.
   d. The A i2b parameter is higher than the A i2Ti parameter.
   e. The temperature is not in the dead-band between the A i2b parameter and the A i2Ti parameter (in this case, previous state will be retained).
4. The customer thermostat is properly hooked up the input strip 1TB3, and is requesting cooling input (V1) based on the customer cooling setpoint being lower than the space temperature.

Heating

In general, the (CSTI) changeover function will provide heating if:

1. A unit is factory-configured with a changeover coil (cooling/heating) as the only coil or as the main coil portion.

2. SW3 on the CSTI adapter board is turned on, and the FPrU parameter set to EHL or EHFS to use the changeover functions.
   a. EHL parameter should be chosen if the unit has a changeover coil without electric heat.
   b. EHFS parameter should be chosen if the unit has a changeover coil with electric heat. Generally, this will perform the same as the EHL parameter but will in addition, disable the heating function on electric heat and on the changeover coil heat if there are fan failures. The auxiliary heating coil valve will continue to respond to customer heating requests.
3. The ECM engine has sensed that there is hot water available on the supply/bypass line for the changeover coil. In this case, "hot" water is determined if:
   a. A 10K NTC thermistor (similar to Trane part number X13790374010) is wired properly to the engine board, through the crossover cables and CSTI adapter boards.
   b. The input impedance of the thermistor circuit must be set correctly (the A iPU parameter should be set to in for CSTI units).
   c. The temperature sensed is higher than the A i2b parameter.
   d. The A i2b parameter is higher than the A i2Ti parameter.
   e. The temperature is not in the dead-band between the A i2b parameter and the A i2Ti parameter (in this case, previous state will be retained).
4. The customer thermostat is properly hooked up the input strip 1TB3, and is requesting heating input (V2) based on the customer heating set point being higher than the space temperature.
5. The heating input on 1TB3 will drive the main changeover coil IF conditions 1–4 are satisfied, but will always drive the auxiliary coil valve (if present). Electric heat will be locked out (where present) if hot water is available since SW4 will be factory set to "ON" in these units.

SW4 selects the electric heat lockout function, where we will lock out the electric heat circuit based on either:

1. The presence of hot water in the changeover coil section (if the FPrU parameter is set to EHL).
2. Abnormal behavior of the fan/s (if the FPrU parameter is set to FnSt).
3. Or a combination of both the presence of hot water or abnormal behavior of the fan/s (if the FPrU parameter is set to EHFS).
4. The preceding three examples depend on the inference of the engine board that hot water is present. In this case, "hot" water is determined if:
   a. The temperature sensed is higher than the A i2b parameter.
   b. The A i2b parameter is higher than the A i2Ti parameter.
   c. The temperature is not in the dead-band between the A i2b parameter and the A i2Ti parameter (in this case, previous state will be retained).
   d. The input impedance of the thermistor circuit must be set correctly (the A iPU parameter should be set to in for CSTI units).

Thermostat

The thermostat is a wall-mounted, field installed option. It can provide three-speed control.

Figure 27. Thermostat terminal block

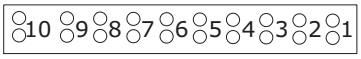

Terminal Block

1. 24 Vac
2. N
3. Fan High
4. Fan Med
5. Fan Low
6. Cool/Cool or Heat
7. Heat/Aux Heat
8. Entering Water sensor
9. Common
10. N/A

Figure 28. Thermostat wiring

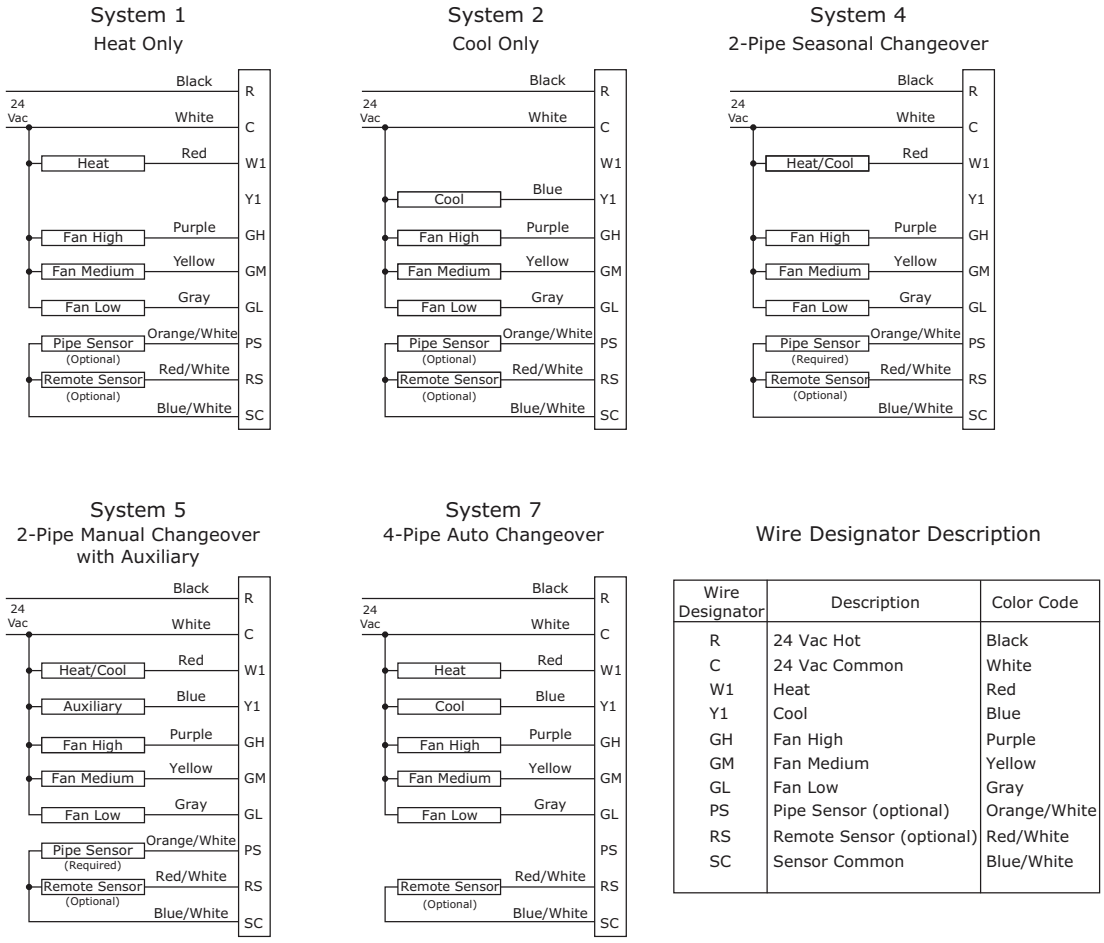

Wire Designator Description

Wire Designator	Description	Color Code
R	24 Vac Hot	Black
C	24 Vac Common	White
W1	Heat	Red
Y1	Cool	Blue
GH	Fan High	Purple
GM	Fan Medium	Yellow
GL	Fan Low	Gray
PS	Pipe Sensor (optional)	Orange/White
RS	Remote Sensor (optional)	Red/White
SC	Sensor Common	Blue/White

⚠WARNING

Electrical Shock Hazard!

Turn off power at the main service panel by removing the fuse or switching the appropriate circuit breaker to the OFF position before removing the existing thermostat.

Important: *Thermostat installation must conform to local and national building and electrical codes and ordinances.*

Note: *Mount the thermostat about five feet above the floor. Do not mount the thermostat on an outside wall, in direct sunlight, behind a door, or in an area affected by a vent or duct.*

1. Turn off power by removing the fuse or switching the appropriate circuit breaker off.
2. To remove cover, remove screw and pull gently at the seam at the top.
3. Set thermostat away from working area.
4. Align thermostat base with junction box mounting holes and feed the control wires through hole.
5. Use supplied screws to mount thermostat base to junction box.
6. Wire nut the thermostat wires to your system wires.
7. Gently tug wire to be sure of proper connection. Double check that each wire is connected to the proper terminal.
8. Snap thermostat to base that is mounted on the wall. Refasten with screw.
9. Turn on power to the system at the main service panel.
10. Test thermostat operation as described in "Testing (Thermostat)," p. 88.

⚠CAUTION

Equipment Damage!

Be sure exposed portion of wires does not touch other wires.

Tracer® ZN520 Controller

Tracer® ZN520 controllers are LonTalk® devices that interface with the Trane Tracer® Summit building

management system. Reference the unit wiring diagram or submittals.

Ground shields at each Tracer® ZN520, taping the opposite end of each shield to prevent any connection between the shield and anther ground.

Note: *For more detailed information, refer to the most recent version of Trane publication CNT-SVX04*-EN (Tracer® ZN520 Unit Controller: Installation, Operation and Programming Guide) for the communication wiring diagram.*

Communication Wire Specification

Communication wire must conform to the following specification:

1. Shielded twisted pair 18 AWG
2. Capacitance 23 (21–25) picofarads (pF) per foot
3. Listing/Rating—300 V 150C NEC 725-2 (b) Class 2 Type CL2P
4. Trane Part No. 400-20-28 or equivalent.

Note: *Communication link wiring is a shielded, twisted pair of wire and must comply with applicable electrical codes.*

Controller communication-link wiring must be low capacitance, 18-gage, shielded, twisted pair with stranded, tinned-copper conductors. For daisy chain configurations, limit the wire run length to 5,000 ft. Truck and branch configurations are significantly shorter. LonTalk wire length limitations can be extended through the use of a link repeater.

General Wire Guidelines

Follow these general guidelines when installing communication wiring on units with a Tracer® ZN520 controller:

- Maintain a maximum 5000 ft. aggregate run.
- Install all communication wiring in accordance with the NEC and all local codes.
- Solder the conductors and insulate (tape) the joint sufficiently when splicing communication wire. Do not use wire nuts to make the splice.
- Do not pass communication wiring between buildings because the unit will assume different ground potentials.
- Do not run power in the same conduit or wire bundle with communication link wiring.

Note: *You do not need to observe polarity for LonTalk communication links.*

Recommended Wiring Practices

The following guidelines should be followed while installing communication wire.

- LonTalk is not polarity sensitive. Trane recommends that the installer keep polarity consistent throughout the site.
- Only strip away two inches maximum of the outer conductor of shielded cable.
- Make sure that the 24 Vac power supplies are consistent in how they are grounded. Avoid sharing 24 Vac between LonTalk UCMs.
- Avoid over-tightening cable ties and other forms of cable wraps. A tight tie or wrap could damage the wires inside the cable.
- Do not run LonTalk cable alongside or in the same conduit as 24 Vac power.
- In an open plenum, avoid lighting ballasts, especially those using 277 Vac.
- Do not use a trunk and branch configuration, if possible. Trunk and branch configurations shorten the distance cable can be run.

Device Addressing

LonTalk devices are given a unique address by the manufacturer. This address is called a Neuron ID. Each Tracer® ZN520 controller can be identified by its unique Neuron ID, which is printed on a label on the controller's logic board. The Neuron ID is also displayed when communication is established using Tracer® Summit or Rover service tool. The Neuron ID format is 00-01-64-1C-2B-00.

Tracer® UC400 Controller

This section provides information about wiring the UC400 controller. For more detailed information, refer to BAS-SVX02*-EN.

Wiring Overview Outline

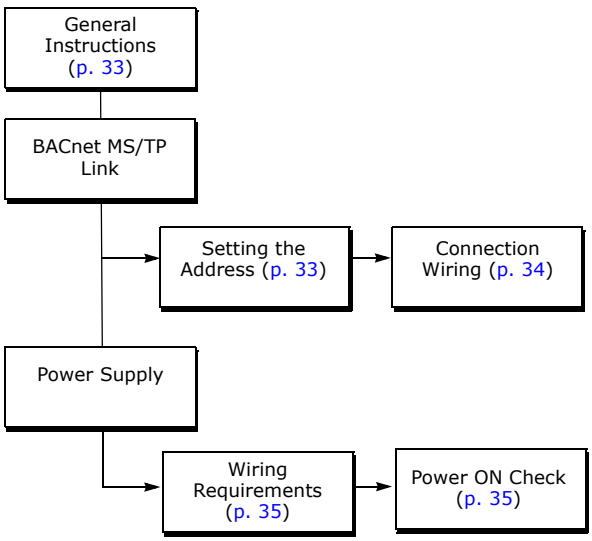

General Instructions

Conformance to Regulatory Standards

All wiring must comply with the National Electrical Code™ (NEC™) and local electrical codes.

Connecting Wires to Terminals

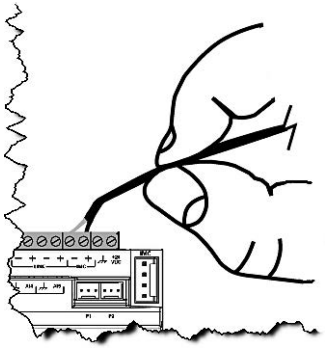

To connect wires to the UC400 controller or the expansion modules:

1. Strip the wires to expose 0.28 inch (7 mm) of bare wire.
2. Insert the wire into a terminal connector.
3. Tighten the terminal screw to 0.5 to 0.6 N-m (71 to 85 ozf-in or 4.4 to 5.3 lbf-in.).
4. Tug on the wires after tightening the screws to ensure all wires are secure as shown on the right.

BACnet MS/TP Link

Setting the Address

The rotary address dials on the UC400 controller serve one or two purposes depending upon the network: they are always used for the MAC Address, which is sometimes all or part of the BACnet Device ID (refer to the illustration below).

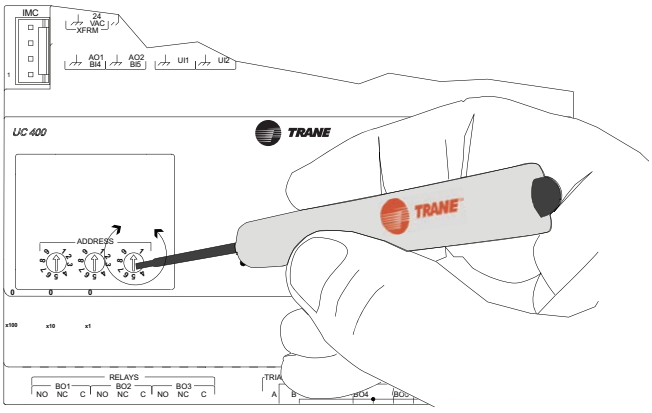

Use a 1/8 inch (3.2 mm) flathead screwdriver to set rotary address dials. Dials rotate in either direction.

MAC Address. The MAC Address is required by the RS-485 communication protocol on which BACnet operates. A UC400 controller can use a MAC Address from 001 to 120.

Important: *Each device on the link must have a unique MAC Address/Device ID. The controller rotary addresses should be sequentially set, with no gaps in the numbering, starting with 001 on each link (for example 001, 002, 003, 004 and so on). A duplicate address or a 000 address setting will interrupt communications and cause the Tracer® SC device installation process to fail.*

BACnet Device ID. The BACnet Device ID is required by the BACnet network. Each device must have a unique number from 001 to 4094302.

BACnet networks without a Tracer® SC system controller

On BACnet networks without a Tracer® SC system controller, the Device ID can be assigned one of two ways:

- It can be the same number as the MAC Address, determined by the rotary address dials on the UC400 controller. For example, if the rotary address dials are set to 042, both the MAC Address and the BACnet Device ID are 042.
- It can be soft set using the Tracer® TU service tool. If the BACnet Device ID is set using the Tracer® TU service tool, the rotary address dials *only* affect the MAC Address, they do not affect the BACnet Device ID.

BACnet networks with a Tracer® SC system controller

On BACnet networks with a Tracer® SC system controller, the Device ID for the UC400 controller is always soft set by the system controller using the following scheme illustrated below.

Note: *The BACnet Device ID is displayed as the Software Device ID on the Tracer® TU* ***Controller Settings*** *page in the* ***Protocol*** *group.*

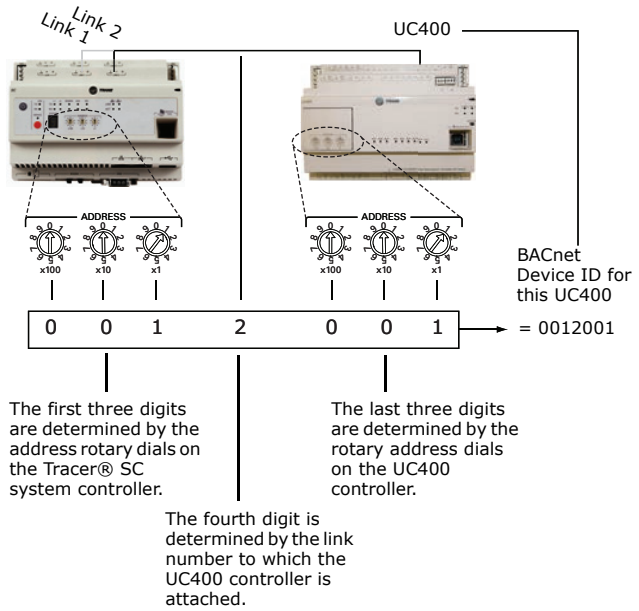

Connection Wiring

Field-supplied BACnet MS/TP link wiring must be installed in compliance with NEC and local codes. The wire must be low-capacitance, 18-gauge, stranded, tinned-copper, shielded, twisted-pair. The illustration below shows an example of BACnet link wiring with multiple UC400 controllers.

Note: *For more details, refer*: Unit Controller Wiring for the Tracer® SC System Controller *(BAS-SVN03*-EN.*

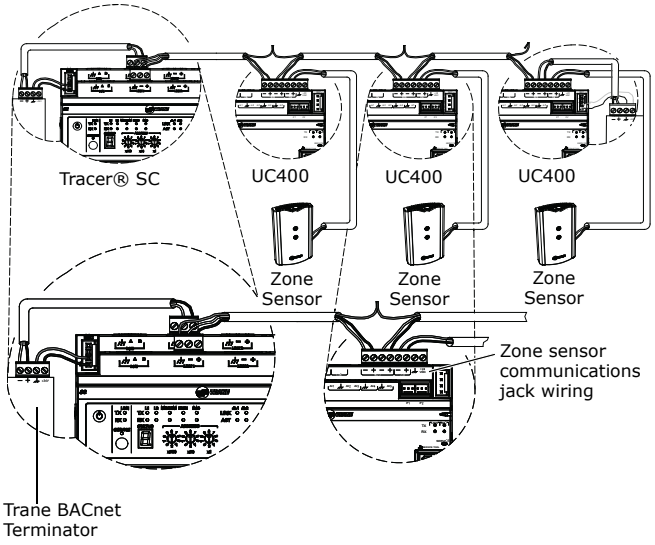

Power Supply

Please read all of the warnings, cautions, and notices below before proceeding with this section.

to the controller (12 VA) and outputs (maximum 12 VA

⚠WARNING

Hazardous Voltage!

Failure to disconnect power before servicing could result in death or serious injury. Disconnect all electric power, including remote disconnects before servicing. Follow proper lockout/tagout procedures to ensure the power can not be inadvertently energized. Verify that no power is present with a voltmeter.

⚠CAUTION

Proper Ground Connection Required!

Failure to follow instructions below could result in death or serious injury. After installation, ensure that the 24 Vac transformer is grounded through the controller. Measure the voltage between chassis ground and any ground terminal on the controller. Expected result: Vac < 4.0 volt.

NOTICE

Equipment Damage!

Sharing 24 Vac power between controllers could result in equipment damage.

A separate transformer is recommended for each UC400 controller. The line input to the transformer must be equipped with a circuit breaker sized to handle the maximum transformer line current.

If a single transformer is shared by multiple UC400 controllers:

- The transformer must have sufficient capacity.
- Polarity must be maintained for every UC400 controller powered by the transformer.

Important: *If the polarity is inadvertently reversed between two controllers powered by the same transformer, a difference of 24 Vac will occur between the grounds of each controller, which can result in:*

- *Partial or full loss of communication on the entire BACnet MS/TP link*
- *Improper function of the UC400 controller outputs*
- *Damage to the transformer or a blown transformer fuse*

Transformer Recommendations

A 24Vac power supply must be used for proper operation of the binary inputs, which requires 24Vac detection. In addition, the spare 24Vac outputs may be used to power relays and TRIACS.

- AC transformer requirements: *UL listed, Class 2 power transformer, 24 Vac ±15%, device max load 24 VA. The transformer must be sized to provide adequate power per binary output).*

- CE-compliant installations: *The transformer must be CE marked and SELV compliant per IEC standards*.

Wiring Requirements

To ensure proper operation of the UC400 controller, install the power supply circuit in accordance with the following guidelines:

- A dedicated power circuit disconnect switch must be near the controller, easily accessible by the operator, and marked as the *disconnecting device* for the controller.
- 18 AWG (0.823 mm^2) copper wire is recommended for the circuit between the transformer and the controller.

Important: *The controller must receive AC power from a dedicated power circuit; failure to comply may cause the controller to malfunction.* DO NOT *run AC power wires in the same wire bundle with input/output wires; failure to comply may cause the controller to malfunction due to electrical noise.*

Connecting Wires

To connect the wires:

1. Disconnect power to the transformer.
2. Connect the 24 Vac secondary wires from the transformer to the 24 Vac and ⏚ terminals on the UC400 controller (refer to the illustration below).
3. Do one of the following to ensure the controller is adequately grounded:
   - Connect a grounding pigtail at some point along the secondary wire that runs between the controller ⏚ terminal and the transformer.
   - Ground one of the ⏚ terminals on the controller to the enclosure (if the enclosure is adequately grounded) or to an alternate earth ground.

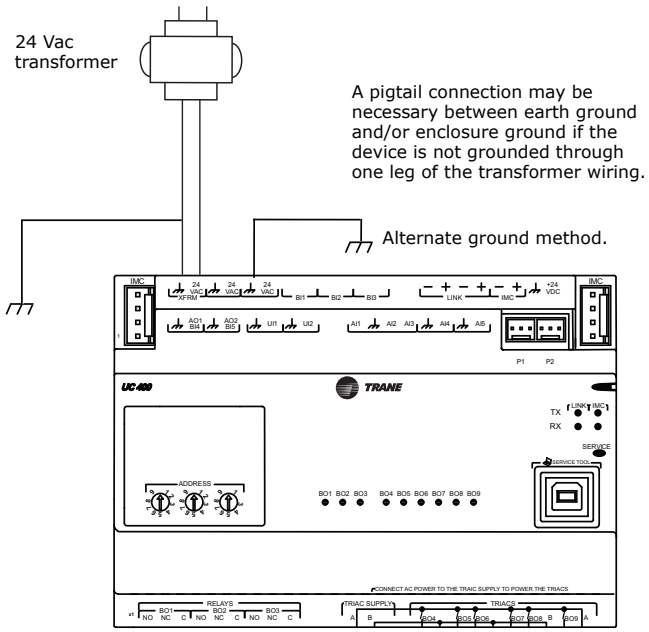

Power ON Check

To perform a **Power ON** check:

1. Verify that the 24 Vac connector and the chassis ground are properly wired.
2. Remove the lockout/tagout from the line voltage power to the electrical cabinet.
3. Energize the transformer to apply power to the UC400 controller.
4. Observe the UC400 controller when power is applied to verify the power check sequence as follows:
   a. The power LED lights red for 1 second
   b. The power LED lights green
   - If the sequence above is completed as described, the controller is properly booted and ready for the application code.

If the power LED flashes red, a fault condition exists.

Zone Sensor Options

Figure 29. Wireless temp sensor with display (SP, OALH, COMM)

Figure 30. Wireless temp sensor (SP, OALMH, COMM)

Figure 31. Wall mtd temp sensor (SP, OCC/UNOCC, OA, LMH, COMM)

Figure 32. Unit mtd temp sensor (SP, OALH, COMM)

Figure 33. Split mtd zone sensor, unit mtd fan speed switch, and wall mtd setpoint dial with On/Cancel

Figure 34. Split mtd zone sensor, unit mtd fan speed switch, and wall mtd setpoint dial

Figure 35. Wall mtd temp sensor (SP, OALMH, COMM)

Figure 36. Wall mtd display temp sensor (SP, OCC/UNOCC, OALMH, COMM)

Fan Mode Switch Installation

The fan mode switch ships loose inside the unit accessory bag. Follow the steps below to install the fan mode switch.

Items needed:

2 x 4 electrical junction box

1. Remove the brown wire if not using a field-supplied damper.
2. Remove the terminals, cut and strip wires as required for installation.
3. Level and position a 2 x 4 electrical junction box.
4. Follow the instructions given in "Wall-Mounted Control Interconnection Wiring," p. 49 and route the

wires as shown in the wiring diagram. Refer to the typical wiring diagram or to the unit specific diagram on the unit.

5. Position the fan mode switch over the junction box with the two screws supplied.

Zone Sensor Installation

Location Considerations

When selecting a sensor location, avoid the following:

- Areas of direct sunlight
- Areas in the direct airstream of air diffusers
- Exterior walls and other walls that have a temperature differential between the two sides
- Areas that are close to heat sources such as sunlight, appliances, concealed pipes, chimneys, or other heat-generating equipment
- Drafty areas
- Dead spots behind doors, projection screens, or corners
- Walls that are subject to high vibration
- Areas with high humidity
- High traffic areas (to reduce accidental damage or tampering)
- Metal barriers between the receiver and the sensor (for example, plastered walls with metal lathe or metal roof decks)
- Thick, solid concrete walls between the receiver and the sensor
- Placing the sensor inside metal enclosures.

Location Considerations for Wireless Zone Sensors

Placement of the sensor is critical to proper operation (the receiver is factory mounted on fan-coil units). For most installations, barriers limit proper radio signal strength more than distance. For best radio transmission range and reliability, mount the receiver and sensor in line of sight. Where this is not possible, try to minimize the number of barriers between the pair of devices. In general, sheetrock walls and ceiling tiles offer little restriction to the transmission range for the sensor is as follows:

- Open range: 2,500 ft (packet error rate = 2%)
- Usable range: 200 ft
- Typical range: 75 ft

Height Requirements

It is recommended that you mount the back plate a maximum distance of 54 inches above the floor. If a parallel approach by a person in a wheelchair is required, reduce the maximum height to 48 inches.

Note: *Consult section 4.27.3 of the 2002 ADA (Americans with Disability Act) guideline, and local building codes, for further details regarding wheelchair requirements.*

Mounting Surfaces

Using the hardware provided, mount the back plate of the sensor to a flat surface such as sheetrock or plaster, or an electrical junction box. The sensor must be mounted plumb for accurate temperature control and to ensure proper air movement through the sensor.

- If mounting onto sheetrock or plaster, use the plastic threaded anchors (pre-drilling holes is not usually necessary) and the two M3.5 x 20 mm mounting screws.
- For mounting onto an electrical junction box, use the two 6-32 x 3/4 in. screws.

Before beginning installation, consider the location considerations below. Also, refer to the unit wiring schematic for specific wiring details and point connections.

Location Considerations

Avoid mounting the sensor in an area subject to the following conditions:

- Dead spots, such as behind doors or in corners that do not allow free air circulation.
- Air drafts from stairwells, outside doors, or unsectioned hollow walls.
- Radiant heat from the sun, fireplaces, appliances, etc.
- Airflow from adjacent zones or other units.
- Unheated or uncooled spaces behind the controller, such as outside walls or unoccupied spaces.
- Concealed pipes, air ducts, or chimneys in partition spaces behind the controller.

Zone Sensor Dimensions

Refer the wall-mounted zone sensor dimensions in Figure 37, p. 38. Position the sensor on an inside wall three to five feet above the floor and at least 18 inches from the nearest outside wall. Installing the sensor at a lower height may give the advantage of monitoring the temperature closer to the zone, but it also exposes the sensor to airflow obstructions. Ensure that air flows freely over the sensor.

Figure 37. Wall-mounted wired and wireless zone sensor dimensions

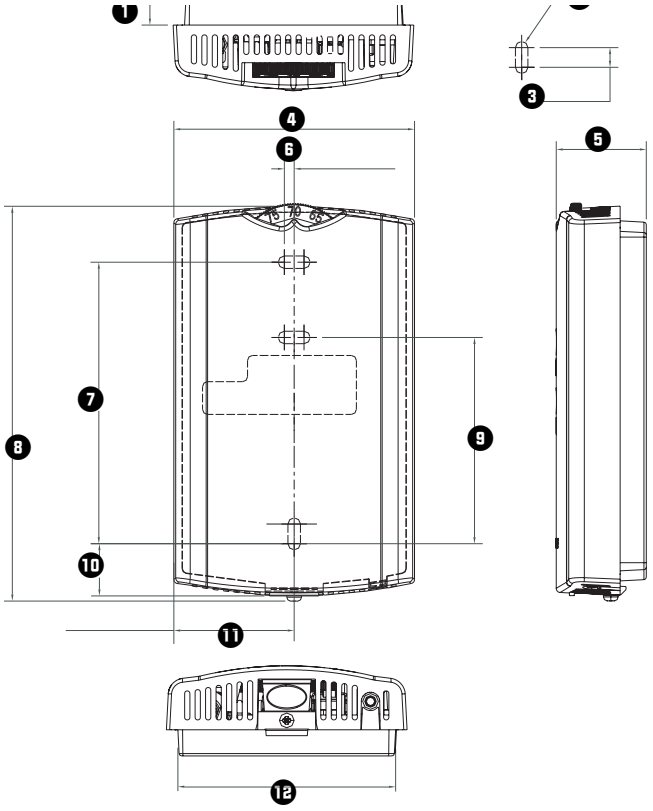

1. 0.31 in
2. TYP R.07 in (R1.9)
3. TYP 0.24 in)
4. 2.9 in
5. 1.08 in
6. 0.12 in
7. 3.39 in
8. 4.68 in
9. 2.48 in
10. 0.63 in
11. 1.45 in
12. 2.62 in

Wired Zone Sensor

Follow the procedure below to install the wired zone sensor module.

1. Note the position of the setpoint adjustment knob and gently pry the adjustment knob from the cover using the blade of a small screwdriver.
2. Insert the screwdriver blade behind the cover at the top of the module and carefully pry the cover away from the base.
3. To mount the sensor back plate:
   a. Hold the back plate against the mounting surface and mark the screw locations.
   b. Secure the back plate against the mounting surface using included hardware.
4. To install the zone sensor module to a standard junction box:
   a. Level and install a 2 x 4-in. junction box (installer supplied) vertically on the wall.
   b. Pull the control wires through the cutout. Attach the module to the wall using the screws provided.
5. Strip the insulation on the interconnection wires back 0.25-inch and connect to TB1 (for wired sensors).
6. Screw down the terminal blocks (for wired sensors).
7. To replace the cover:
   a. Hook the cover over the top of the back plate. Apply light pressure to the bottom of the cover until it snaps in place.
   b. Install the security screw into the bottom of the cover (if desired).

If installing a Tracer® ZN520 zone sensor, see "Zone Sensor Options," p. 35 for more information.

Figure 38. Mounting zone sensor security screw

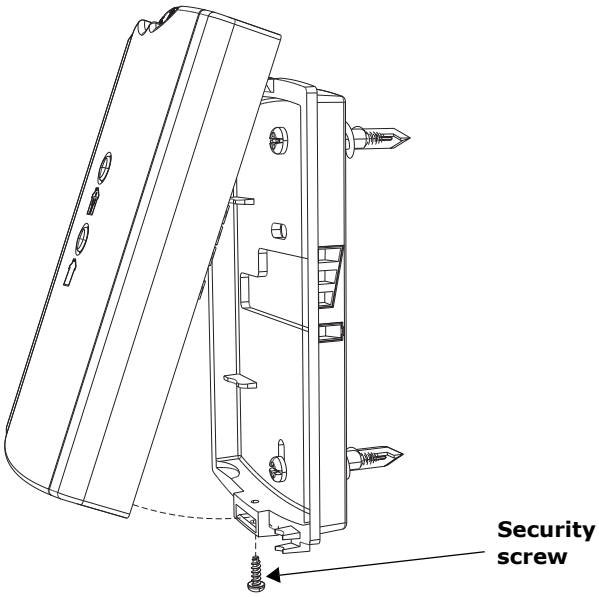

Figure 39. Mounting zone sensor base plate

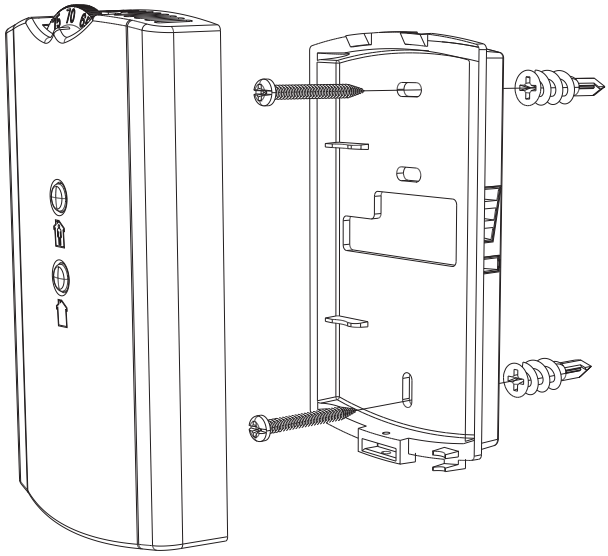

Receivers

Note: *Receivers ship installed on the unit. To remove the receiver, press in the retention tabs on the underside of the receiver enclosure and push upward.*

For more detailed information for wireless sensors, please refer to BAS-SVX04-EN.*

Zone Sensor Setting

Address Setting

The process of establishing communication between a receiver and sensor is referred to as *association*. The following limitations apply:

- Each associated receiver/sensor set that communicates within the reception range of the wireless system must have a unique address.

It is not possible to associate more than one sensor to a receiver, nor is it possible to associate more than one receiver to a sensor.

To associate a receiver and sensor, the two devices must have their rotary address switches set to the same address.

Important: *Set the addresses before applying power to the receiver and before removing the insulation strip (Figure 40) from the sensor.*

To set the receiver and sensor addresses:

1. Using a small screwdriver, set the three rotary address switches (locations S1, S2, S3) on the receiver to an address between 001 and 999 (see Figure 40). You do not have to remove the covers to access the rotary address switches.

   Note: *Do not use 000 as an address. An address of 000 returns the receiver outputs to their factory defaults (zone temperature and setpoint outputs: 72.5°F, removes all association knowledge, and prevents association with a sensor.*

Figure 40. Setting the rotary address switches on the receiver and the sensor

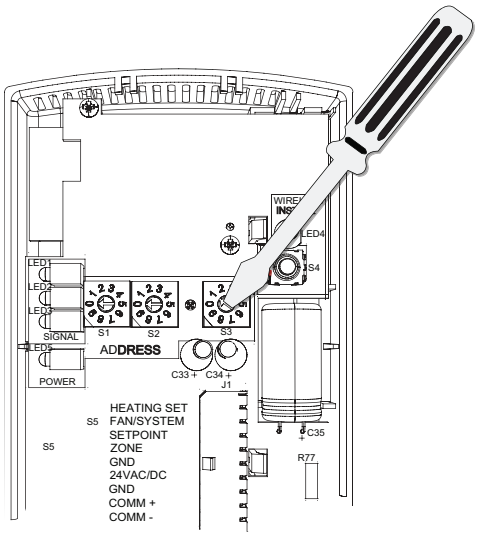

Receiver

Do not remove the insulation strip yet.

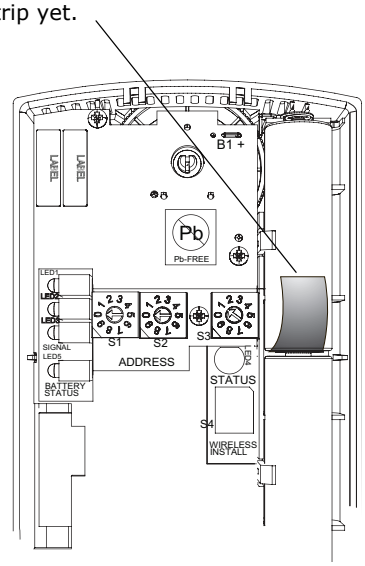

Sensor

2. Set the three rotary address switches (locations S1, S2, S3) on the sensor *to the same address as the receiver* (see Figure 40).

   Note: *Do not use 000 as an address. An address of 000 removes all association knowledge, reverts the sensor to a low-power hibernation mode, and sends a disassociation request to the receiver.*

3. Record the address and location of the receiver and sensor pair.

Observing the Receiver for Readiness to Associate

After initial power up, the receiver conducts a channel scan for 20 seconds. During this time, the receiver selects from 16 available channels the clearest channel on which to operate. LED1, LED2, and LED3 flash rapidly in succession (round-robin style) while the channel scan is in progress, as shown in part 1 of the illustration.

Important: *Do not attempt association (leave the insulation strip in place) until the channel scan is finished.*

After the channel scan is finished, LED3 begins blinking (one-blink pattern) to show that the receiver is ready to be associated with a sensor (see part 2 of the following figure).

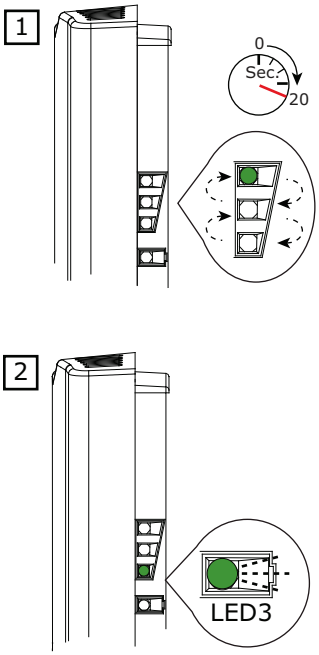

Associating the Sensor to the Receiver

To associate the sensor to the receiver:

1. Remove the sensor cover by firmly pressing the thumb tab at the bottom of the cover and pulling the cover away from the back plate.
2. Verify that the sensor is set to the same address as the receiver it is to be associated with.
3. Power the sensor by removing the insulation strip from between the two batteries.

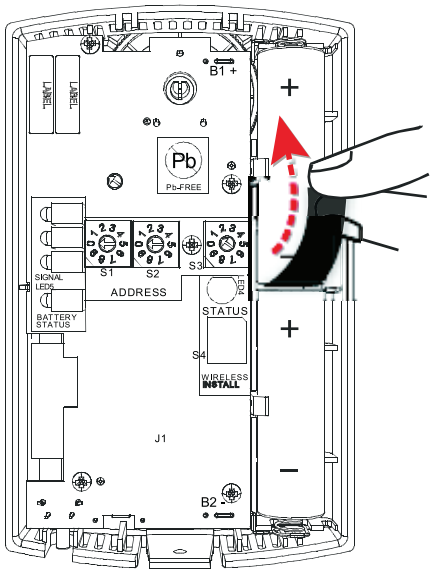

Association is automatically initiated between the sensor and the receiver. When LED3 on the receiver stops blinking, association has been established.

If the first association attempt is unsuccessful, the sensor automatically re-attempts association with the receiver every 10 minutes.

Note: *An associated sensor that has lost communication with the receiver will transmit an association request every 50 minutes. You can manually initiate association (see "Manual Association (Wireless Controls)," p. 97).*

Testing Signal Strength and Battery Status

To verify that the association process was successful and that the batteries have adequate charge:

1. Firmly press and release the Test button on the bottom of the sensor (as illustrated below).
2. For model WZS, view LED1, LED2, and LED3 to determine the signal strength. View LED5 to determine the battery status (see the following figure for model WZS sensors).

   Note: *The LEDs will turn Off after 5 seconds to conserve battery strength.*

   For model WDS, determine the signal strength and battery status by viewing the symbols on the sensor display (see the following figure for model WDS sensors).
3. Record the results in your commissioning statement.

Note: *For more information, see "Testing Signal Strength (Wireless Controls)," p. 95 and "Testing Battery Status (Wireless Controls)," p. 95.*

Model WZS sensor

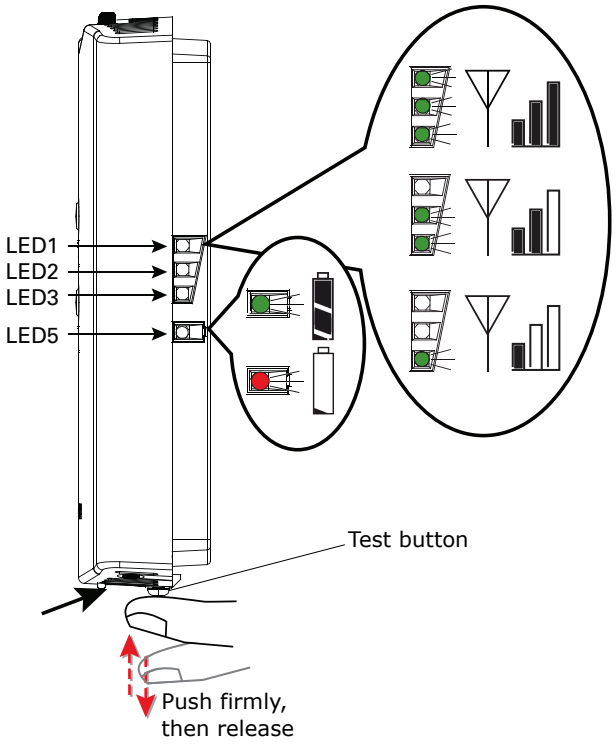

Model WDS sensor

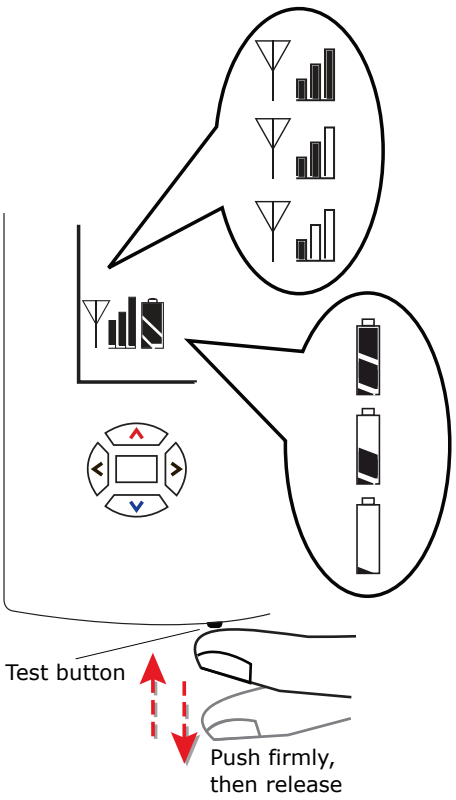

Sensor Operations

Temporary Occupancy (Timed Override)

Temporary occupancy (timed override) is available on model WDS. Temporary occupancy is selected for after-business-hours adjustment of temperature setting, fan settings, or heat/cool settings, when the system has changed to unoccupied mode. System control will revert to unoccupied after a pre-determined time period.

Note: *Not all systems support the occupancy function.*

Model WDS Sensor

To request and cancel temporary occupancy on a model WDS sensor, see "Requesting Temporary Occupancy," p. 46.

End-of-Range Temperature Values

Receiver: The end-of-range temperature limits of the receiver for *all models* are 32°F to 122°F. The receiver cannot replicate temperature values outside this range. If the sensor transmits a temperature value to the receiver that is out of the receiver replication range, the receiver will "freeze" the output at the end-of-range values. This value will remain frozen until the transmitted temperature moves to between the end-of-range temperature limits.

Sensor: The end-of-range temperature setpoint limits for the *model WDS sensor* is 50°Fto 89.6°F.

Receiver Power-up Sequence

When power is applied to the receiver, one of the following sequences occurs. The sequence is dependent on the address setting and the association status of the receiver.

Address set to 000 and receiver is not associated with a sensor

- LED5 is constantly On, indicating power is applied and the receiver is functional.
- All models: Zone temperature and cooling setpoint default to 72.5°F.
  WDS only: The heating setpoint defaults to 70.5°F and the fan/system output will be 2230 Ω. (see "Output Values—Failure and Default Modes of Operation (Wireless Controls)," p. 98).
- Status LED3 will display a 2-blink pattern diagnostic.

Address set from 001 to 999 and receiver is not associated with a sensor

- LED5 is constantly On, indicating power is applied and the receiver is functional.
- All models: Zone temperature and cooling setpoint default to 72.5°F.
  WDS only: The heating setpoint defaults to 70.5°F and the fan/system output will be 2230 Ω. (see "Output Values—Failure and Default Modes of Operation (Wireless Controls)," p. 98).

- The receiver conducts an energy scan for 20 seconds to determine the clearest channel on which to operate.
- LED3 flashes On every 2 seconds when it is ready to accept a sensor association request. When an association request is made by a sensor, the receiver instructs the sensor on which power level to operate. Then the receiver and sensor begin operation at the appropriate channel and power level (see "Observing the Receiver for Readiness to Associate," p. 40).

Address set from 001 to 999 (and not changed since most recent power-up) and receiver is associated with a sensor

- LED5 is constantly On, indicating power is applied and the receiver is functional.
- Zone temperature and setpoint default to 72.5°F. WDS only: Heating setpoint defaults to 70.5°F, Fan = Auto, System = Off.
- The receiver waits for a broadcast transmission from its associated sensor. When a transmission is received, the receiver positions its zone temperature and setpoint outputs appropriately.
- If the receiver does not receive a communicated signal from its associated sensor within 35 minutes, zone temperature and setpoint outputs fail, generating a unit controller alarm (see "Output Values—Failure and Default Modes of Operation (Wireless Controls)," p. 98).

Note: *Once a receiver communicates to a WZS sensor, the receiver disables (opens) its zone setpoint output indefinitely.*

Sensor Transmission Time and Temperature Variables

Sensor transition time variables are as follows:

- The maximum time between sensor temperature transmissions is 15 minutes.
- The minimum time between sensor temperature transmissions is 30 seconds.
- The minimum time for transmitting temperature setpoint changes is 10 seconds.

Note: *If a sensor transmits a message to the receiver and the receiver does not reply, the sensor will retransmit the message to the receiver every 30 seconds until communication to the receiver is re-established.*

Sensor temperature time variables are as follows:

- The minimum change in zone temperature required to force a sensor transmission is:
  - 0.2°F when the temperature range is between 60°F and 80°F
  - 0.5°F when the temperature range is between 32°F and 60°F or between 80°F and 122°F
- The minimum change in temperature setpoint required to force a sensor transmission is:
  - 0.1°C for a model WDS sensor.

Wireless Sensor Specifications

The following table presents specifications for all models of the wireless sensor sets.

Table 11. Wireless sensor specifications

Component	Type
Sensor operating temperature	32°F to 122°F
Receiver operating temperature	-40°F to 158°F
Storage temperature	-40°F to 185°F
Storage and operating humidity range	5% to 95%, non-condensing
Accuracy	0.5°F over a range of 55°F to 85°F
Resolution	0.125°F over a range of 60°F to 80°F 0.25°F when outside this range
Setpoint functional range (WDS only)	50°F to 89.6°F
Receiver voltage	24 V nominal ac/dc ±10%
Receiver power consumption	<1 VA
Housing	Polycarbonate/ABS blend, UV protected, UL 94-5VA flammability rating, suitable for application in a plenum
Mounting	3.24 in (8.26 cm) for 2 mounting screws (supplied)
Sensor battery	(2) AA, 1.5 V, 2800 mAh, lithium, 5-year life, UL listed
Range[(a)]	Open range: 2,500 ft (762 m) (packet error rate = 2%) Usable: 200 ft (61 m) Typical: 75 ft (23 m)
Output power	100 mW
Radio frequency	2.4 GHz (IEEE Std 802.15.4-2003 compliant) (2405 to 2480 MHz, 5 MHz spacing)
Radio channels	16
Address range	000 to 999
Minimum time between transmissions	30 seconds
Maximum time between transmissions	15 minutes

(a) Range values are estimated transmission distances for satisfactory operation. Actual distance is job specific and must be determined during site evaluation.

Configuring the Wireless Display Sensor (Model WDS only)

Note: *Sensors shipped with the fan-coil are pre-configured for three speeds.*

The configuration of the sensor determines which system features can be accessed and changes can be made by the tenant (for example, changes to cooling/heating mode, setpoint, or fan speed. Verify system and associated unit features before configuring the sensor.

The building owner or operator may choose to limit tenant access to certain features. This can be done through configuration. Or, if a sensor is configured to match all control capabilities of the building automation system, the locking feature can be used to restrict the tenant from making changes.

Configuration Procedure

To configure settings on the model WDS sensor, follow this procedure in the order presented.

1. Press the configuration button for 3 seconds.

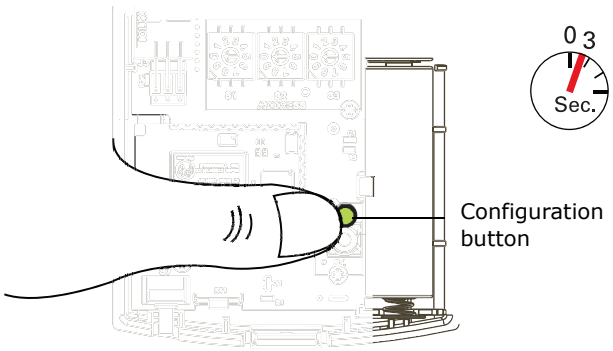

The display will change to configuration mode. When the sensor is in configuration mode, a wrench symbol appears on the display and the menus are separated by lines, as illustrated below.

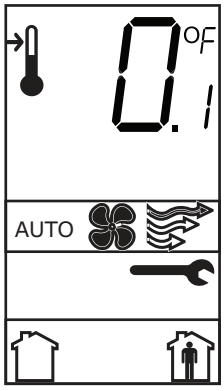

2. Press the center button on the keypad to begin the configuration process.

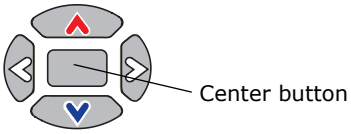

3. Configure the sensor options in the order shown in the table.
   - Press or to scroll to the next selection (as illustrated).
   - Press or to move to the next menu (as illustrated).

Setting	Configuration Options
Temperature • Choose Fahrenheit or Celsius • Choose the degree resolution (whole degrees, half degrees, or tenths of degrees).	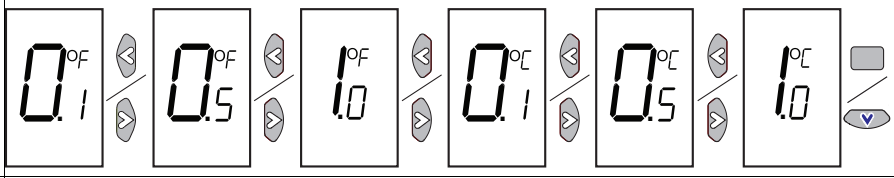
Setpoint	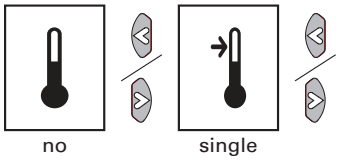 no setpoint single setpoint

Setting	Configuration Options
System	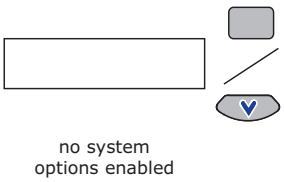
Fan **Note:** Not all fan options are available for all systems.	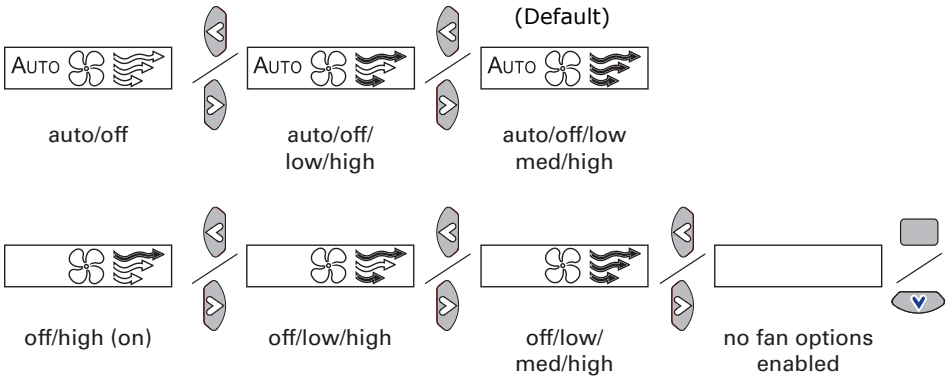
Occupancy (timed override)	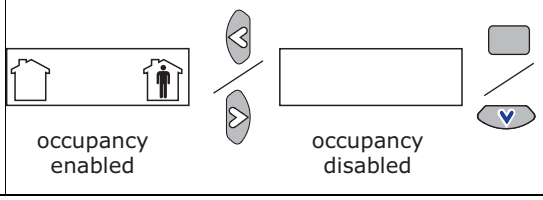

4. Review the display to ensure that you have selected the correct configuration.
5. To return the display to operating mode, press the configuration button (see Step 1, p. 43).

Note: *The sensor will revert to operating mode if no buttons are pressed for 10 minutes.*

Displaying Setpoint or Temperature

You can configure the sensor to display either the temperature (default) or setpoint. To select either option:

1. Verify that the sensor is in operating mode and at the home screen.
2. Press the up and down arrows for 3 seconds. The arrow indicates setpoint display, as shown in the figure.

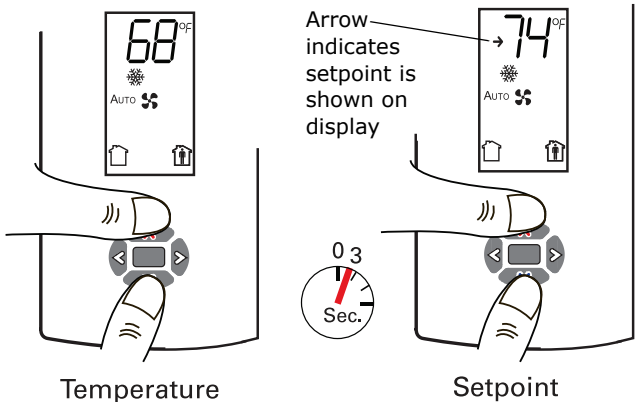

Locking or Unlocking Settings

You can lock or unlock the setpoint, system, or fan setting to prevent changes.

To lock or unlock a setting:

1. Verify that the sensor is in operating mode and at the home screen.
2. Choose a setting to lock or unlock:
   - Select the setpoint by pressing the up or down arrow.

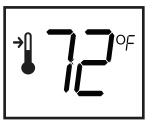

Setpoint

- From the system menu press the down arrow to select the fan menu. Use the left or right arrow to choose the setting.

Fan menu

3. Press the left and right arrows for 4 seconds.

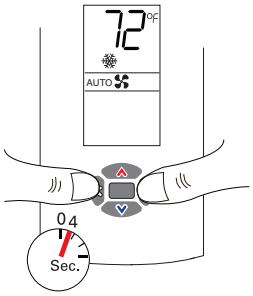

Note: *If you try to access a feature that is locked, the locked symbol will appear on the display. If you press a keypad button to try change a locked setting, the locked symbol will flash.*

WDS Operating Mode

This section describes how to operate the Trane wireless sensor, model WDS. Figure 41 shows an example of a model WDS that has been configured and is in operating mode.

Figure 41. Wireless sensor (model WDS) in operating mode

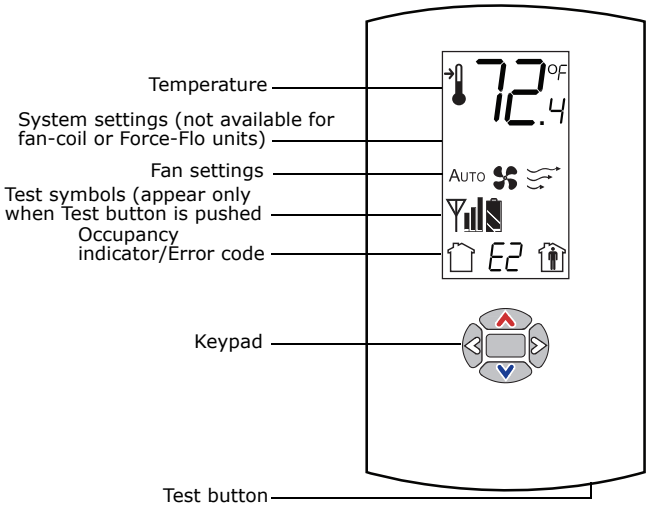

Changing Room Temperature

72.4 °F	This symbol shows the current room temperature, or your setpoint selection while you are making an adjustment.	1. To increase the room temperature, press ▲. To decrease the room temperature, press ▼. 2. To confirm, press ▭ or wait 5 seconds. The display will return to the home screen.
	When you select a setpoint, this symbol appears.	

Changing Heating and Cooling Room Temperature Settings

(applies to some systems)

	Some systems allow you to select both heating and cooling room temperature settings. If your system has this option, this symbol appears when you adjust the temperature setting.	1. Press ▲ or ▼ to select the heating/ cooling setting. 2. If in cooling mode, press ◀ to change to heating mode. If in heating mode, press ▶ to change to cooling mode. 3. Press ▲ or ▼ to select the heating/ cooling setting. 4. To confirm, press ▭ or wait 5 seconds. The home screen will appear.
	When you adjust the cooling setting, the top arrow and snowflake flash.	
	When you adjust the heating setting, the bottom arrow and flame flash.	

Changing the Fan Setting

AUTO	Indicates that the fan will operate as needed to reach the selected temperature.	1. From the home screen, activate the fan setting menu by pressing ▭ and then ▼. 2. Press ◀ or ▶ to choose the desired fan setting. 3. When the symbol for the desired setting appears, confirm your choice by • Pressing ▭ (the home screen will appear), or • Pressing ▲ or ▼ (the next menu will appear), or • Waiting five seconds.
	Indicates that the fan setting is On. The number of arrows indicates fan speed (3: high, 2: medium, 1: low). The example shown indicates a fan on high speed. Not all systems offer all three speeds.	
	Indicates that the fan setting is Off.	

Requesting Temporary Occupancy

	Select to request occupancy	• If you need heating or cooling after normal business hours, you can "request" temporary occupancy by pressing and holding it for 2 seconds. The occupied symbol remains on the screen and the unoccupied symbol disappears. After 30 seconds, the unoccupied symbol will re-appear. • To cancel temporary occupancy, press and hold for 2 seconds. The unoccupied symbol will remain on the screen and the occupied symbol will disappear. After 30 seconds, the occupied symbol will re-appear.
	Select to cancel occupancy	

Error Codes

	Indicates an error code	If an error code (E0–E7) is displayed, technical assistance may be required.

Lock Symbol

	Indicates that a setting is locked	The lock symbol appears if you try to adjust a setting that cannot be changed.

Testing Signal Strength

Indicates excellent signal strength	Indicates satisfactory signal strength	Indicates poor signal strength

Press the Test button to display the signal strength symbols.

Testing Battery Status

Indicates full battery power	Indicates 50% of battery life left.	Indicates 25% of battery life left. Replace batteries. Flashing symbol indicates that approximately 14 days of operation remain.

Press the Test button to display the battery status symbols.
Use only UL-listed non-rechargeable 1.5 V lithium AA batteries (Trane p/n X13770035010 or equivalent).

The following table presents agency compliance information for wireless sensor set models as shown.

United States compliance (all models)	UL listed: UL 94-5VA Flammability rating UL 916: Energy management equipment
	FCC CFR47, Section 15.247 & Subpart E Digital Modulation Transmission with no SAR (FCC Identification TFP-13651127) This device complies with Part 15 of the FCC Rules. Operation is subject to the following two conditions: 1. This device may not cause harmful interference, and 2. This device must accept any interference received, including interference that may cause undesired operation. Warning: Changes or modifications not expressly approved by the party responsible for compliance could void the user's authority to operate the equipment. 20 cm separation distance: To comply with FCC's RF exposure limits for general population/uncontrolled exposure, the antenna(s) used for this transmitter must be installed to provide a separation distance of at least 20 cm from all persons and must not be co-located or operating in conjunction with any other antenna or transmitter.
Canada compliance (all models)	CSA22.2 No. 205-M1983 Signal Equipment
	Industry Canada (Certification no: IC: 6178A-13651127) Industry Canada statement: the term "IC" before the certification/registration number signifies only that the Industry Canada technical specifications were met. Section 14 of RSS-210: The installer of this radio equipment must ensure that the antenna is located or pointed such that it does not emit RF field in excess of Health Canada limits for the general population.
IEEE compliance for radio frequency range (all models)	IEEE 802.15.4-2003, IEEE Standard for Information Technology—Telecommunications and information exchange between systems—Local and metropolitan area networks—Specific requirements, Part 15.4: Wireless Medium Access Control (MAC) and Physical Layer (PHY) Specifications for Low Rate Wireless Personal Area Networks (LR-WPANs)

Time Clock

Setting the Time Clock

The Time Clock must be programmed for the unit to operate. If not programmed, the unit may not run in the correct occupied/unoccupied state until timing instructions are received from the Time Clock.

Note: *Power must be supplied to the unit for the time clock to be set.*

The following procedure covers:

- setting the time format
- setting the current time and day
- setting the program ON / OFF settings (events)
- pre set program selections
- deleting programs
- daylight savings setting
- overriding programs (manually)

Figure 42. Time clock

1. Time format display
2. Day display
3. LED display

The time clock (see Figure 42) is located behind the access door of a Unit Ventilator.

Reset the Time Clock

To clear any programs that may exist from the factory, press the reset button (**Res.**).

Note: *The time clock uses Standard Time. If you are programming during Daylight Savings Time, one hour should be subtracted from times needed (see "Daylight Savings Time," p. 48).*

For example, if the Daylight Savings Time is 2:30, the time setting for the clock should be 1:30.

Set the Time Format, Time, and Day

(Program to 24 hr or am/pm format.)

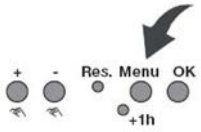

1. Press the **Menu** button until the display screen is blank (time not showing) and **24h** or **am/pm** is blinking in the upper left corner of the screen.
2. Use the **+** and/or **-** buttons to select the desired setting and then press **OK**.
3. The hour display begins to blink—use the **+** and/or **-** buttons to select the desired setting and then press **OK**.
4. The minute display begins to blink—use **+** / **-** to select the desired setting and press **OK**.
5. The day display (on the left side of the display screen) begins to blink—use **+** / **-** to select the desired setting and press **OK**.

Set the Program

Note: *The Time Clock should be used to program the unit for the UNOCCUPIED mode—the periods of time when the unit will not be in operation. The mode you are programming is shown on the LED display:*

: The Timer is in operation (ON). The unit is in UNOCCUPIED mode.
: The Timer is not in operation (OFF). The unit is in OCCUPIED mode.

Note: *Odd number programs activate the timer ON function (the unit is in UNOCCUPIED mode) and even number programs activate the timer OFF function (the unit is in OCCUPIED mode).*

Set the Switching ON Time

Figure 43. Setting the switching ON time

1. Press **OK** until **prog 01** is visible on the LED display (see Figure 43).

   Note: *When **prog 01** is visible, **01** should be blinking and the ON symbol, , should be displayed in the LED window. Press **OK** again.*

2. The hour display begins to blink—use the **+** and/or **-** buttons to select the desired setting and then press **OK**.

3. The minute display begins to blink—use **+** / **-** to select the desired setting and press **OK**.
4. The day display (on the left side of the display screen) begins to blink—use **+** / **-** to select the desired setting and press **OK**.

Note: *After you set the switching ON time, the prog number should increase by one (for example, from **prog 01** to **prog 02**). The number should be blinking and the OFF symbol, ◯, should be displayed in the LED window. Set the switching OFF time.*

Set the Switching OFF Time

1. The hour display begins to blink—use the **+** and/or **-** buttons to select the desired setting and then press **OK**.
2. The minute display begins to blink—use **+** / **-** to select the desired setting and press **OK**.
3. The day display (on the left side of the display screen) begins to blink—use **+** / **-** to select the desired setting and press **OK**.

Note: *Repeat the steps for setting the switching ON/OFF times for each additional programming needed. You can set a maximum of 20 times: 10 switching ON times, and 10 switching OFF times.*

Preset Program Selections

When selecting daily programming, preset selections can be used.

Figure 44. Preset program selection options

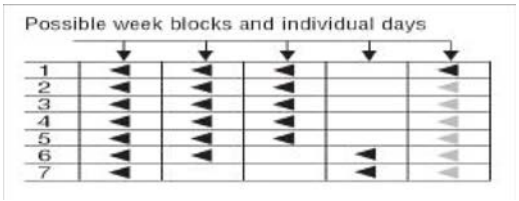

Deleting Programs

1. Press the **Menu** button and then press **OK** until the ON hour time display of the program you want to delete is blinking.
2. Use the **+** / **-** to select **--** and then press **OK**.

Important: *Switching programs **must** be deleted in ON-OFF pairs. When you delete a single ON instruction, you must also delete the corresponding OFF instruction.*

Daylight Savings Time

Note: *Use **+1h** button to make the change to and from Daylight Savings Time.*

- Press the **+1h** button to add 1 hour to the current time. Press the **+1h** button again to subtract 1 hour from the current time.

Figure 45. Daylight Savings Time

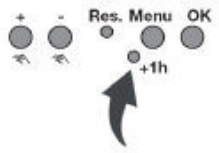

Override Program (Manual)

To override the program, press the **OVR** (**+**) button.

Toggle between the unoccupied ◉ and occupied ◯ states by pressing the **OVR (+)** button.

Note: *When you override the program, the override remains in effect until the next programming event or until you press **OVR** again.*

Installation - Electrical

Wiring

Electrical Wiring

Unit Wiring Diagrams. Specific unit wiring diagrams, based on unit options ordered, are provided inside each unit and can be easily removed for reference. Use these diagrams for connections or trouble analysis. Wiring diagrams are attached on the inside of the front panel of the unit.

Supply Power Wiring. Refer to the unit nameplate to obtain the minimum circuit ampacity (MCA) and maximum fuse size (MFS) or maximum circuit breaker (MCB) to properly size field supply wiring and fuses or circuit breakers. Refer to the unit operating voltage listed on the unit wiring schematic, submittal, or nameplate. Reference the wiring schematic for specific wiring connections.

Note: *All field wiring should conform to NEC and all applicable state and local code requirements. The control panel box is always on the end opposite the piping connections. Access the control box by removing the two screws that secure the front cover. This will allow the panel to be removed, to provide access to the electrical components.*

If the unit does not have a disconnect switch, the power leads and capped ground wire are inside the control panel. If the unit has a disconnect switch, the power leads are wired to the junction box switch on the control panel. Pull the capped ground wire into the junction box.

Electrical Grounding Restrictions. All sensor and input circuits are normally at or near ground (common) potential. When wiring sensors and other input devices to the Tracer® controller, avoid creating ground loops with grounded conductors external to the unit control circuit. Ground loops can affect the measurement accuracy of the controller.

All input/output circuits (except isolated relay contacts and optically isolated inputs) assume a grounded source, either a ground wire at the supply transformer to control panel chassis, or an installer supplied ground.

Wall-Mounted Control Interconnection Wiring. The installer must provide interconnection wiring to connect wall-mounted devices such as a fan mode switch or zone sensor module or thermostat. Refer to the unit wiring schematic for specific wiring details and point-to-point wiring connections. Dashed lines indicate field wiring on the unit wiring schematics. All interconnection wiring must conform to NEC Class 2 wiring requirements and any state and local requirements. Refer to the following table for the wire size range and maximum wiring distance for each device.

Table 12. Maximum wiring distances for low voltage controls (ft)

Device	Wire Size	Range
Fan Control Switch	14–22 AWG	500
Zone Sensor/ Thermostat	16–22 AWG	200

Important: *Do not bundle or run interconnection wiring in parallel with or in the same conduit with any high-voltage wires (110 V or greater). Exposure of interconnection wiring to high voltage wiring, inductive loads, or RF transmitters may cause radio frequency interference (RFI). In addition, improper separation may cause electrical noise problems. Therefore, use shielded wire (Belden 83559/83562 or equivalent) in applications that require a high degree of noise immunity. Connect the shield to the chassis ground and tape at the other end.*

Note: *Do not connect any sensor or input circuit to an external ground connection.*

Supply Power. Power supply wiring is to be connected to terminals 1 and 2 at the junction box in the left end pocket, below the discharge air grille.

NOTICE:

Use Copper Conductors Only!

Failure to use copper conductors could result in equipment damage as the equipment was not designed or qualified to accept other types of conductors.

Electric Heat Units

Supply Power. Supply power wiring is to be connected to the following line terminals in the right-hand end pocket:

- 208V or 240V, 3-phase, 3-wire system: L1, L2, and L3
- 480V, 3-phase, 4-wire system: L1, L2, L3, and N (neutral)

Note: *The supply neutral wire must be connected to the neutral terminal block.*

Operational controls and an electric heating safety device are factory mounted. The safety device is a high temp cut-out which de-energizes electric heating elements through the K1 safety contactor.

Heating Coils with Direct Expansion Cooling

⚠WARNING

Hazardous Voltage!

Failure to disconnect power before servicing could result in death or serious injury.

Disconnect all electric power, including remote disconnects before servicing. Follow proper lockout/ tagout procedures to ensure the power can not be inadvertently energized. Verify that no power is present with a voltmeter.

Wiring. A typical unit ventilator with DX coil includes an low limit sensor, a frost preotection thermostat and a 24V transformer for condensing unit control.

Wire sizing is the same as given for the thermostat wiring in the condensing unit installation instructions, or may be obtained from the nameplate. The condensing unit must be controlled by the unit controller that also controls the Unit Ventilator.

Split System Start-Up. After all piping and wiring has been completed, follow the instructions provided with the condensing unit for control testing and system start-up. If sweat-type field-piped systems are being used, then pressure testing, evacuation and refrigerant charging will be required.

Two bulbs will also be shipped with a split system unit:

1. Frostat® bulb
2. TXV valve bulb

Both components are to be field installed. For complete installation instructions and locations, refer to the tag attached to the unit.

ECM Overview and Setup

Overview

This section addresses changes to unit ventilators, integrating new Trane Brushless DC motors and controllers. This exciting new series delivers outstanding comfort, safety, and performance with greatly reduced energy consumption compared to traditional units with permanent split capacitance AC motors.

The new series of units will provide a long service life with proper installation and operation. The new system provides a high degree of flexibility and configurability, but the simplicity of customized factory configuration appropriate to most installations.

Very little intervention is needed by service and installation personnel in most applications; however, installers must read through the entire document before beginning installation of the new equipment.

This literature focuses on unit motors and controls, including three new circuit modules developed specifically for this series.

General Information

There are four primary components that enable the technology on your product:

1. Trane BLDC Motor
2. ECM Engine Board
3. Adapter Board
4. CSTI Adapter Board

The motors and modules are combined as systems, and cannot work without each other.

Trane BLDC Motor

Figure 46. Trane BLDC motor

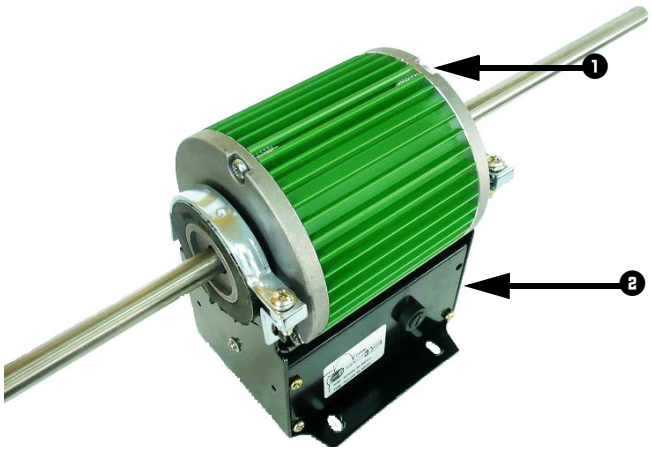

1. High Efficiency Brushless DC (BLDC) Motor Core
2. Motor Base Housing Potted Electronics Package

- The BLDC motor has integrated electronics, overload protection and short circuit protection. The motor contains no user-serviceable components inside.

NOTICE

Equipment Damage!

The motor harness attached to the single plug to which the motor mates contains the very important motor voltage jumper and should not be modified or substituted. Failure to follow this instruction could result in equipment damage.

- The motor mates to the unit electrically via a single plug that contains both the operating voltage and the control signals that are needed for correct operation.
- The BLDC motor comes a single shaft configuration for all horizontal unit ventilator sizes (075, 100, 125, 150, 200).
- The BLDC motor has two voltage variations, 115/208-230V and 277V. Units with three-phase and neutral have motors wired to the L-N (as opposed to L-L). The 115/208-230V is configured for voltage by use of an external jumper. If the jumper is present the motor will be configured for use with 115V. The jumper must NOT be present for use with 208-230V.

ECM Engine Controller

Figure 47. ECM engine controller

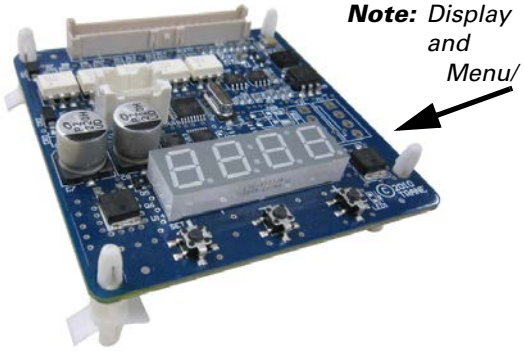

- The ECM engine controls and reports the performance of up to two Trane BLDC motors.
- The engine also co-ordinates the operation of the fan in response to electric heat behavior, and electric heat behavior in response to hydronic heat behavior and fan behavior.
- The engine incorporates a user interface that allows adjustment of certain unit parameters and provides constant feedback on motor operation.
- The engine integrates service and troubleshooting tools, including high-precision tachometers, fan status, and electric heat-enable indicators.

- The engine integrates a versatile configurable auxiliary temperature sensor.
- The engine incorporates various safety and lockout features, such as maintaining proper fan speeds, if electric heat is called for.

Status Display

The ECM engine board contains a four-digit, seven-segment display that is used to present information in a format close to real-world language, while having a small-form factor. Most characters are immediately recognizable; however, please refer to the following table for the graphical representation of each alphanumeric character.

Figure 48. Status display

Table 13. Screen representation of alphabetical characters

A	B	C	D	E	F	G	H	I	J	K	L	M	N	O	P	Q	R	S	T	U	V	W	X	Y	Z
A	b	C	d	E	F	g	H	I	J	H	L	m	n	O	P	q	r	S	t	U	u	v	H	y	2

Table 14. Screen representation of numeric characters

1	2	3	4	5	6	7	8	9	0
1	2	3	4	5	6	7	8	9	0

Installation and Initial Setup

⚠WARNING

Hazardous Voltage w/Capacitors!

Failure to disconnect power and discharge capacitors before servicing could result in death or serious injury. Disconnect all electric power, including remote disconnects and discharge all motor start/run capacitors before servicing. Follow proper lockout/tagout procedures to ensure the power cannot be inadvertently energized. For variable frequency drives or other energy storing components provided by Trane or others, refer to the appropriate manufacturer's literature for allowable waiting periods for discharge of capacitors. Verify with a CAT III or IV voltmeter rated per NFPA 70E that all capacitors have discharged.

⚠WARNING

Safety Alert!

You MUST follow all instructions below. Failure to do so could result in death or serious injury.

- **The BLDC motors contain capacitors which store residual energy. Please keep clear of the fan wheels for 5 minutes after the power has been removed from the system, as a power request with the motor powered off, could result in a very short period of actuation.**
- **All settings take effect immediately, including fan startup and enabling of electric heat. Caution should be taken to stay clear of hazardous voltages, moving parts and electric heat elements while making adjustments to the ECM engine board. If it is not practical to stay clear of these areas during adjustment of the ECM engine board, please contact Trane Global Parts for configuration kit that allows easy powering of the engine board outside of the unit with a 9V battery.**
- **The adapter boards contain high voltage. Configuration adjustments to the ECM engine board should be made through the SMALLER of the two low-voltage lids on the front of the control panel, through the low-voltage insulation/shielding.**
- **Changes to switch settings on the CSTI adapter board take effect immediately. Changes should be made to the CSTI configuration switches with the power off.**
- **Initial hookups to the CSTI and Standard Adapter board, including low voltage interconnections, must be made with the power off.**
- **Do not make connections to the motors or the adapter boards while power is ON. Do not remove connections to the motor or the adapter boards while the power is ON.**
- **Do not free spin the fan wheels with your hands while the unit is powered on. The system is constantly scanning and responding to the operational status of the motors.**

Installation and Initial Setup

Note: *Normally, the Trane BLDC motors are configured for soft ramps and transitions between speeds. However, to aid in commissioning of the unit, for approximately 10–15 minutes, the ramps will be shortened to quickly observe proper unit behavior and response to speeds.*

For new installations, all boards and motors are pre-installed and pre-configured according to the unit configuration, indicated by its model number.

Under normal and intended operation, the only required intervention specific to the new BLDC units is the wiring of:

- Wall-mounted low-voltage fan speed switch inputs to the adapter boards' terminal strips and 24 Vac tap to field-installed fan speed switch.
- Field-supplied controllers/thermostats to the adapter boards' terminal strips and 24 Vac power tap to field-supplied controller/thermostat.
- Adjustment and calibration of the variable speed inputs (VSP/0–10V) on the system.
- Adjustment, calibration or disabling of the optional auto-changeover function on CSTI units.

Otherwise, proceed with the mechanical, electrical and controls installations as defined in other sections of this manual, while obeying the warnings communicated in this section.

Proceed with the power on after installation, as defined in the other sections of UNT-SVX07*-EN.

Wall Mounted Low Voltage Fan Speed Switch/ Customer-Supplied Controller/Thermostat Instructions

⚠WARNING

Hazardous Voltage w/Capacitors!

Failure to disconnect power and discharge capacitors before servicing could result in death or serious injury. Disconnect all electric power, including remote disconnects and discharge all motor start/run capacitors before servicing. Follow proper lockout/ tagout procedures to ensure the power cannot be inadvertently energized. For variable frequency drives or other energy storing components provided by Trane or others, refer to the appropriate manufacturer's literature for allowable waiting periods for discharge of capacitors. Verify with a CAT III or IV voltmeter rated per NFPA 70E that all capacitors have discharged.

⚠WARNING

Safety Alert!

You MUST follow all instructions below. Failure to do so could result in death or serious injury.

- **Hook ups to the adapter boards should be made only with the power off to the unit.**
- **Only connect Class 2 voltages to the terminal blocks on the adapter boards that share a common with the unit mounted low-voltage transformer.**
- **Secure low voltage connections firmly to terminal strips, and strain-relieve all low voltage connection to prevent accidental detachment and possible short-circuiting of high voltage components. Care should be taken to avoid contact of low voltage wiring to the back side of the adapter boards, which contain high voltage.**

Note: *Specifications subject to change without notice. Consult the unit submittals and unit schematics before determining hookup requirements unit. Terminal block positions, polarities and assignments are determined for specific unit configurations only. Signal assignments are indicated, for reference only.*

Both adapter boards come equipped with integrated terminal blocks to hook up to the field supplied/mounted Fan Speed Switches and external controls. Connections should be made to the screw terminals with wires between 16 AWG and 24 AWG, with a ~4–5-mm wire strip length. The terminal blocks have 5-mm spacing, and are equipped with 3-mm screws. The field-supplied wires should have an insulation rating of 600V.

Adjustment and Configuration of the Engine Board

⚠WARNING

Safety Alert!

You MUST follow all instructions below. Failure to do so could result in death or serious injury.

- **All settings take effect immediately, including fan startup and enabling of electric heat. Caution should be taken to stay clear of hazardous voltages, moving parts and electric heat elements while making adjustments to the ECM engine board. If it is not practical to stay clear of these areas during adjustment of the ECM engine board, please contact Trane Global Parts for configuration kit that allows easy powering of the engine board outside of the unit with a 9V battery.**
- **Configuration adjustments to the ECM engine board should be made through the SMALLER of the two low-voltage lids on the front of the control panel, through the low-voltage insulation/shielding.**

⚠CAUTION

Burn Hazard!

On electric heat units, certain parameter values are locked out to prevent overheating of the unit. These functions will appear to be saved; however, they will not be accepted if the Electric Heat Protection setting is "On". Do not change the Electric Heat Protection setting to "Off" and make changes to the protected settings unless you are programming an unconfigured service replacement board to match the unit settings on a ECM configuration label. Failure to follow this instruction could result in the unit overheating and becoming hot to the touch, which could result in minor or moderate injury, and/or equipment damage.

Note: *The engine board functions and unit specific settings are summarized on the ECM engine configuration label affixed to the back side of the control panel low voltage lid on every unit.*

The ECM engine board features a nested menu integrated user interface (UI) that supports:

1. Status display for instant touch-free confirmation of unit operation.
2. Configuration parameter and value display and modification changes (using integrated menu/set buttons).
3. Error code prioritized reporting.

Note: *Characters on the ECM engine board display appear in red, on a black background.*

The display contains decimal positions as well that change position with each parameter, as appropriate. Under normal conditions (i.e., with no error code displayed), the status will loop the following message:

Table 15. Operational status codes

RPM Mode ***RUNNING/ FAN STATUS*** ***CONTINUOUS LOOP*** Displayed when: 1) No error codes are present 2) Motor has completed ramping	ntr 1	Indicates the current rpm of Motor 1 in the system. "0" rpm here indicate that no fan speed has been requested.
	0000 → 2000	
	ntr2	Indicates the current rpm of Motor 2 in the system. "0" rpm here indicate a fan off condition OR a fan "missing" condition[a].
	0000 → 2000	
	FSt 1	Indicates the status being calculated or Fan Motor 1. If "off," this indicates that either: 1) No fan speed is being requested or 2) The fan performance is failing to meet the request; refer to Troubleshooting (ECM) for additional information. If "on," this indicates that the fan is performing correctly and will be used to report fan status correctly, depending on FPru mode.
	YES / no	
	FSt2	Indicates the status being calculated or Fan Motor 2. If "off," this indicates that either: 1) No fan speed is being requested or 2) The fan performance is failing to meet the request; refer to Troubleshooting (ECM) for additional information. 3) If the target speed for Motor 2 is "0", this is used to indicate a missing motor(a). If "on," this indicates that the fan is performing correctly and will be used to report fan status correctly, depending on FPru mode.
	YES / no	
	EhEn	Indicates that the temperature sensing circuit has calculated a logical "on" based on the settings of the following parameters:
	YES / no	A i2Ct / A i2b / A iPU

(a) Motor 1 is the only motor for all horizontal unit ventilator sizes (075, 100, 125, 150, 200).

Configuration Parameter and Value Display and Modification Changes

The ECM engine board's on-board user interface is easy to use and supports:

1. Verification/auditing of on-board parameter settings (read-only)
2. Adjustment of the on-board settings (write)

Figure 49. User interface input buttons

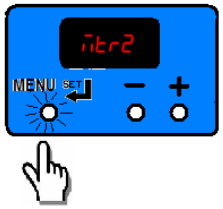

The user interface has three input buttons, from left to right:

1. "Menu/Set"
2. "Decrement"
3. "Increment"

Each button has several different actuation levels depending on length of press, and what the UI is currently displaying.

Table 16. Button actuation levels

Button	Menu/Set	
	Duration	**Action**
Short Press in Status Display	<1 sec	None
Short Press in Configuration Display		Toggles between parameter name and value without saving (abandons value if changed).
Long Press/Hold in Status Display	>3 sec	Enters the configuration menu
Long Press/Hold in Configuration Display	>3 sec	If on a parameter name, toggles to the value. If on a parameter value, saves the value settings and returns to the parameter name as confirmation.

Button	Decrement	
	Duration	**Action**
Short Press in Status Display	<1 sec	None
Short Press in Configuration Display	<1 sec	Scrolls through parameter names, or decreases value of parameter.
Long Press/Hold in Status Display	>3 sec	n/a
Long Press/Hold in Configuration Display	>3 sec	Faster scroll through parameter name, or faster decrease of values of parameters.

Button	Increment	
	Duration	**Action**
Short Press in Status Display	<1 sec	None
Short Press in Configuration Display	<1 sec	Scrolls through parameter names, or increases value of parameter.
Long Press/Hold in Status Display	>3 sec	n/a
Long Press/Hold in Configuration Display		Faster scroll through parameter name, or faster increase of values of parameters.

Configuration Examples

Example 1. View the value parameters without saving. Verify the low speed value for motor 1 is set to 800 rpm.

Start with the ECM engine scrolling status display and proceed as follows:

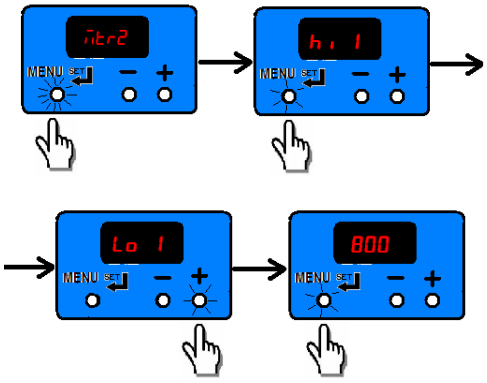

Example 2. Change the value of low speed to 820 rpm.

Continue from the previous example as shown below, using a long press to "save" the new desired value.

Note: *If the display has timed out and returned to the status loop, repeat Example 1 to arrive back at this example's starting point.*

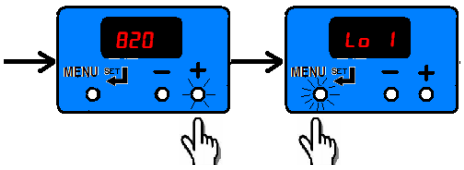

Example 3. Double-check the value of 820 rpm has been saved.

Note: *If the display has timed out and returned to the status loop, repeat Example 1 and Example 2 to arrive back at this example's starting point.*

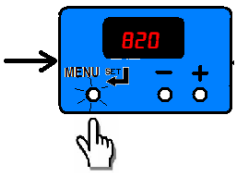

Example 4. Change the value of a protected value on an electric heat unit.

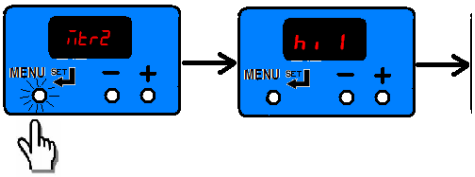

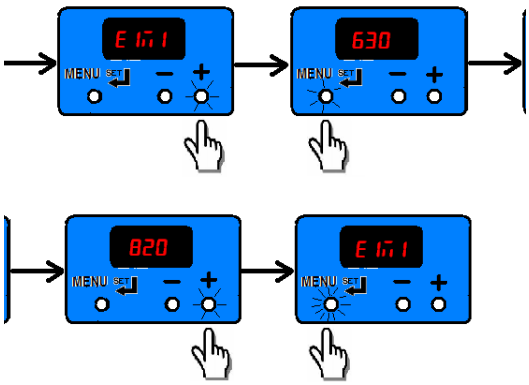

It appears the value has been changed, but after checking the value, the original value has been retained.

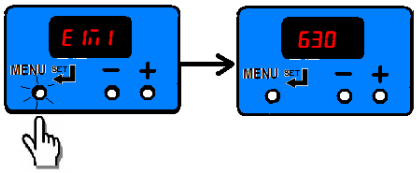

Priority / Error Display

Under special conditions, the status display will interrupt briefly to prioritize display of events:

Notes:

- *During error displays, the user interface will be disabled, until the error is removed or resolved.*
- *If changes are made to parameters and saved, most settings take effect immediately. Any change to fan speeds will take effect and cause the configuration menu to exit immediately to begin tracking speeds via the on-board tachometer.*
- *Where practical, the unit will offer "limp-in" performance, but to ensure safe operation, certain unit functions will be disabled. For example, if one motor fails, the unit will display an error code, but the second motor (if present) will continue to operate. However, to ensure safe operation, the electric heat (if present) will be disabled.*
- *If a error occurs while the configuration menu is in effect, all unsaved values will be discarded and the error codes will be displayed.*

Table 17. Error codes

Displayed during abnormal operation.	nEr 1 LOCH	Indicates a locked rotor condition of Motor 1. The motor will be locked out until the cause has been resolved, and the power cycled; refer to refer to Troubleshooting (ECM) for resolution details. Motor 2 will continue to operate, but will not be monitored. Fan Status function, if being used, will report an inoperative motor. Electric heat and changeover heat will be shut down.
	nEr2 LOCH	Indicates a locked rotor condition of Motor 2. The motor will be locked out until the cause has been resolved, and the power cycled; refer to refer to Troubleshooting (ECM) for resolution details. Motor 1 will continue to operate, but will not be monitored. Fan Status function, if being used, will report an inoperative motor. Electric heat and changeover heat will be shut down.
	nEr 1 OSPd	Indicates that Motor 1 has experienced a run-away or over speed condition, and has been shutdown. The unit will offer limited "limp-in" performance, and Motor 2 will continue to operate, but will not be monitored. Fan Status function, if being used, will report an inoperative motor. Refer to Troubleshooting (ECM): to reset, the cause must be resolved and the power to the unit cycled. Electric heat and changeover heat will be shut down.
	nEr2 OSPd	Indicates that Motor 2 has experienced a run-away or over speed condition, and has been shutdown. The unit will offer limited "limp-in" performance, and Motor 1 will continue to operate, but will not be monitored. Fan Status function, if being used, will report an inoperative motor. Refer to Troubleshooting (ECM): to reset, the cause must be resolved and the power to the unit cycled. Electric heat and changeover heat will be shut down.
	rAMP 0000 → 2000 2000 → 0000	Indicates the motor is transitioning between speeds, ramping up or down. The message "RAMP" is briefly displayed, followed by the target speed for "Motor 1" only. Once the target speed has been reached, the status display will resume operation.
	u 123	On power on, the version of software is briefly displayed, followed by the results of a POST (power on self test).

Note: Fan coil units have only Motor 1 installed.

Initial Setup and Configuration

After connections of power and hookup of customer installed controls/fan speed switches and under normal/operative conditions the only adjustments needed to be made to the ECM engine board during commissioning of the unit are:

- Adjustment and calibration of the variable speed inputs (VSP/0–10V) on the system, where applicable.
- Adjustment, calibration or disabling of the optional auto-changeover function on CSTI units, where applicable.

In addition, the CSTI adapter board offers configurability that can be used in special cases to adjust the following operation of the unit:

- Courtesy cooling/main valve logic inversion relays for use with normally open valves
- Courtesy heating/auxiliary valve logic inversion relays for use with normally open valves
- Changeover function for use with changeover coils (in conjunction with the ECM engine board)

The switches are factory-set based on the model number configuration as ordered; however, the information is provided below to aid in the understanding of the operation of the system.

Configuration

Configuring the ECM Engine Controller

Adjustment and Calibration of the Variable Speed Inputs (VSP/0–10V)

⚠WARNING

Hazardous Voltage w/Capacitors!

Failure to disconnect power and discharge capacitors before servicing could result in death or serious injury. Disconnect all electric power, including remote disconnects and discharge all motor start/run capacitors before servicing. Follow proper lockout/tagout procedures to ensure the power cannot be inadvertently energized. For variable frequency drives or other energy storing components provided by Trane or others, refer to the appropriate manufacturer's literature for allowable waiting periods for discharge of capacitors. Verify with a CAT III or IV voltmeter rated per NFPA 70E that all capacitors have discharged.

⚠WARNING

Safety Alert!

You MUST follow all instructions below. Failure to do so could result in death or serious injury.

- **The adapter boards contain high voltage. Connections to the adapter boards/changes to the CSTI configuration switches should be made only with the power to the unit disconnected.**
- **The adapter boards contain high voltage. Configuration adjustments to the ECM engine board should be made through the SMALLER of the two low-voltage lids on the front of the control panel, through the low-voltage insulation/shielding.**
- **All settings take effect immediately, including fan startup and enabling of electric heat. Caution should be taken to stay clear of hazardous voltages, moving parts and electric heat elements while making adjustments to the ECM engine board. If it is not practical to stay clear of these areas during adjustment of the ECM engine board, please contact Trane Global Parts for configuration kit that allows easy powering of the engine board outside of the unit with a 9V battery.**

⚠CAUTION

Burn Hazard!

On electric heat units, certain parameter values are locked out to prevent overheating of the unit. These functions will appear to be saved; however, they will not be accepted if the Electric Heat Protection setting is "On". Do not change the Electric Heat Protection setting to "Off" and make changes to the protected settings unless you are programming an unconfigured service replacement board to match the unit settings on a ECM configuration label. Failure to follow this instruction could result in the unit overheating and becoming hot to the touch, which could result in minor or moderate injury, and/or equipment damage.

NOTICE

Equipment Damage!

You MUST follow all instructions below. Failure to do so could result in equipment damage.

- **Care should be taken in the system to use a single 24 Vac supply system to avoid damage to equipment.**
- **Care should be taken to observe proper polarity and grounding in the hookup of the 0–10V system to avoid damage to equipment.**

Notes:

- *The 0–10V (variable speed) inputs are available for use, but are not mandatory. The Trane Brushless DC system comes standard with three to five field-accessible*

thermostatic inputs (with adjustable speed), so the use of the 0–10V inputs is optional.

- *All inputs are independently configurable and simultaneously accessible, and the ECM engine will choose the highest user (configured and requested) speed. However, care should be taken with customer controls to avoid contention of signals.*

The ECM engine and adapter boards offer standard, normalizing 0–10V Variable speed fan inputs for use with field supplied controllers or thermostats. These inputs can be used as the only input to the system, used in addition to the thermostatic (H, M, L) inputs, or not used at all. The inputs are accessible via 1TB4 on the adapter boards.

The ECM engine is factory configured to drive the unit to a minimum speed (catalog "low speed" value), defined as ALM1 and ALM2 once the analog (0–10V) input is honored. As a default, the noise floor/threshold is set to 3 percent (0.3V). At 0.3V, the system will drive the motors to the speeds defined in defined as ALM1 and ALM2. If the analog input goes to 10V, the ECM engine will drive the motor to maximum speed (normally catalog "high speed" value), defined as AHM1 and AHM2, and will change speed in response.

Although the ECM engine board ships with settings that will work with most 0–10 Vdc outputs, calibration should be performed to maximize response range and controller authority. Typically, the only settings needed for the VSP inputs are calibration of the signal to ensure that the system obeys the following rules:

1. The minimum output from the field supplied controller is met with a positive fan response. That is, we do not want the uFLr setting on the ECM engine board to be higher than the minimum output of the field supplied controller, as the ECM engine will "ignore" a portion of the usable range of the customer fan variable speed output.
2. The minimum output from the field supplied controller is not significantly greater than the floor setting uFLr floor. If the minimum output of the controller is significantly greater than the floor setting, the first point that the motor will turn on will be above the ALM1 and ALM2 value. The full range of motor control will not be fully utilized in this case, as the motor will never reach the low speed motor analog input scaling value for Motor 1 and Motor 2 (ALM1 and ALM2)
3. The maximum output of the controller needs to be 10V, or if lower, needs to be compensated using the analog input scaling value, AiSc to normalize the operational range. As a default, the scaling value is set to 1.00 (so a voltage of 5V will be graded as 5V); however, to compensate for long runs or lower max voltages (i.e., lower than 10.00), the scaling value can be increased accordingly to maximize operational range.

   For example, if the voltage is only reaching a value of 9.0V at the adapter boards, then the AiSc parameter should be set to (10/9=) 1.111. If left un-calibrated, the unit will never attain maximum speeds, defined as AHM1 and AHM2.
4. The ECM engine can accept slightly over-biased inputs up to 12 Vdc, and the AiSc parameter can be set to a value less than 1.0 to compensate.

VSP Setup Examples

Example 1: uFLr set too high and AiSc set too high

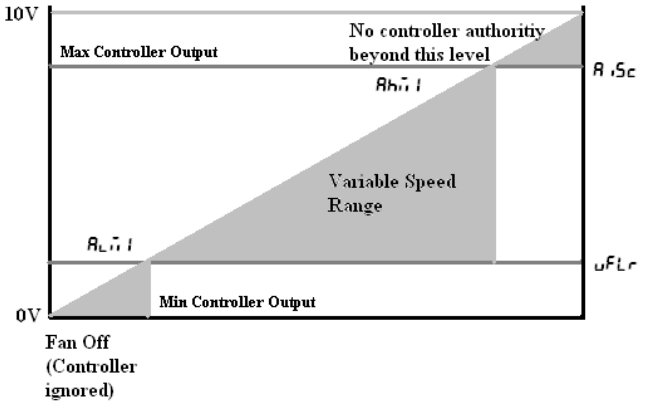

Example 2: uFLr set too high but AiSc set correctly

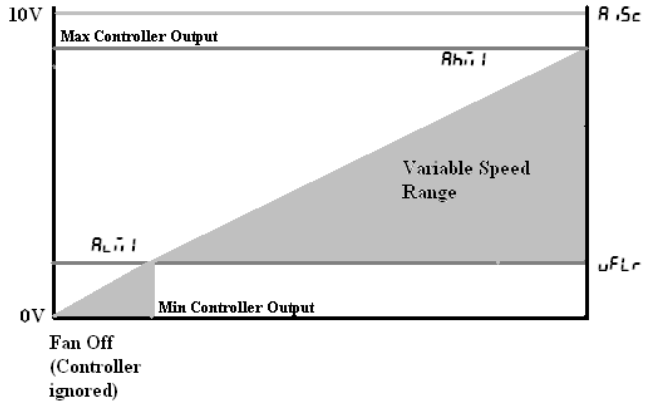

Example 3: uFLr set correctly and AiSc set correctly

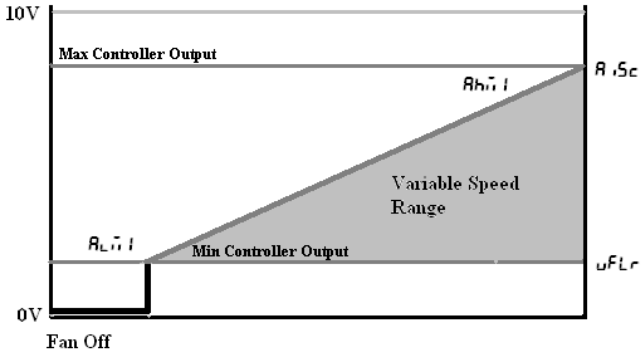

Use of Potentiometer/Rheostat For VSP

⚠WARNING

Hazardous Voltage w/Capacitors!

Failure to disconnect power and discharge capacitors before servicing could result in death or serious injury. Disconnect all electric power, including remote disconnects and discharge all motor start/run capacitors before servicing. Follow proper lockout/ tagout procedures to ensure the power cannot be inadvertently energized. For variable frequency drives or other energy storing components provided by Trane or others, refer to the appropriate manufacturer's literature for allowable waiting periods for discharge of capacitors. Verify with a CAT III or IV voltmeter rated per NFPA 70E that all capacitors have discharged.

⚠WARNING

Safety Alert!

You MUST follow all instructions below. Failure to do so could result in death or serious injury.

- **The adapter boards contain high voltage. Connections to the adapter boards/changes to the CSTI configuration switches should be made only with the power to the unit disconnected.**
- **Configuration adjustments to the ECM engine board should be made through the SMALLER of the two low-voltage lids on the front of the control panel, through the low-voltage insulation/shielding.**
- **All settings take effect immediately, including fan startup, enabling of electric heat. Caution should be taken to stay clear of hazardous voltages, moving parts and electric heat elements while making adjustments to the ECM engine board. If it is not practical to stay clear of these areas during adjustment of the ECM engine board, please contact Trane Global Parts for configuration kit that allows easy powering of the engine board outside of the unit with a 9V battery.**

A courtesy 10-Vdc supply is provided that can support a 10-mA draw. The use of a 1K or a 10K potentiometer is recommended, and only a stand-alone potentiometer (not shared with any other electrical system) should be employed. When a simple potentiometer is used as depicted in the following figure, the uFLr setting will define a null-zone (off).

The typical connection is depicted in the following figure; however, please consult the unit schematic for the most updated instruction.

Figure 50. Typical connection

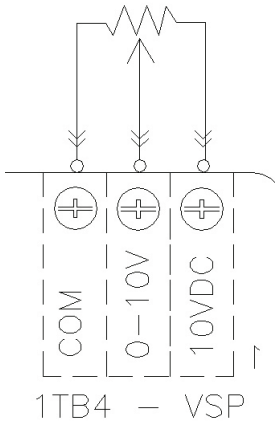

Adjustment or Disabling of Optional Auto-Changeover Function on CSTI Units

⚠WARNING

Hazardous Voltage w/Capacitors!

Failure to disconnect power and discharge capacitors before servicing could result in death or serious injury. Disconnect all electric power, including remote disconnects and discharge all motor start/run capacitors before servicing. Follow proper lockout/ tagout procedures to ensure the power cannot be inadvertently energized. For variable frequency drives or other energy storing components provided by Trane or others, refer to the appropriate manufacturer's literature for allowable waiting periods for discharge of capacitors. Verify with a CAT III or IV voltmeter rated per NFPA 70E that all capacitors have discharged.

⚠WARNING

Safety Alert!

You MUST follow all instructions below. Failure to do so could result in death or serious injury.

- **The adapter boards contain high voltage. Connections to the adapter boards should be made only with the power to the unit disconnected.**
- **All settings take effect immediately, including fan startup, enabling of electric heat. Caution should be taken to stay clear of hazardous voltages, moving parts and electric heat elements while making adjustments to the ECM engine board. If it is not practical to stay clear of these areas during adjustment of the ECM engine board, please contact Trane Global Parts for configuration kit that allows easy powering of the engine board outside of the unit with a 9V battery.**

The ECM engine board provides additional temperature controlled logic to help coordinate certain electric-heat and valve logic functions:

- On units with electric heat and a changeover coil, the engine board and adapter boards are pre-configured to cause hydronic heat and electric heat to be mutually exclusive:
  - On units with ComfortLink™ controls (Tracer® ZN controllers), the Tracer® ZN board will serve as the primary logic to select the electric heat only if hot water is not available, but the engine board will service as a backup lockout.
  - On units with Customer Supplied Controllers (CSTI units), the engine board and CSTI board will serve as the primary lockout.
- On CSTI units selected with a changeover coil configuration, the engine board is factory configured to work in conjunction with the CSTI adapter board to provide a useful auto-changeover function. Traditionally, a fixed setpoint bi-metallic disc temperature switch is used to provide changeover with customer controls; however, the engine board has defeatable and configurable bi-metallic disc temperature switch emulation when combined with the CSTI adapter board. The ECM engine is preconfigured for typical values, so changeover settings do not necessarily need to be changed.

  Note: *CSTI board does not support changeover function with modulating valves.*

  - An NTC thermistor is supplied and affixed to the supply pipes where applicable. The ECM engine has several settings that affect the operation of the changeover function:
    - FPrU parameter should normally be set to EHL or EHFS to use the changeover functions.
    - EHL parameter should be chosen if the unit has a changeover coil without electric heat.
    - EHFS parameter should be chosen if the unit has a changeover coil with electric heat. Generally, this will perform the same as the EHL parameter but in addition, will disable heating function on electric heat and on the changeover coil if there are fan failures. The auxillary heating coil function will continue to operate and respond to the customer heating request.
- A iPU parameter should be set to In for CSTI units and to OUt for ComfortLink controller units.
- A i2n parameter defines the temperature at which the engine board will close the triac onboard the ECM engine (if FPrU parameter is set correctly).
- A i2b parameter defines the temperature at which the engine board will open the triac onboard the ECM Engine (if FPrU parameter is set correctly). By leaving a “gap” between the make and break value, we will simulate hysteresis of a real bi-metallic disc temperature switch.
- When combined with the CSTI adapter board, the bi-metallic disc temperature switch emulation and the electric heat lockout function will work when the switches are set correctly.

  Note: *CSTI board does not support changeover function with modulating valves.*

Configuring the ECM Engine Board

Every Trane unit with BLDC motors will have modules specifically configured at the factory for the operation of that unit. The ECM engine configuration label is affixed to the low-voltage access lid on the outside of the control panel. The ECM engine label may be on the back-side of the low voltage access lid, depending on the unit configuration.

The serial number of each unit and the custom configuration settings specific to that unit will be printed on the label for convenient matching of labels/settings to specific units. Programming a unit with the settings from another unit will result in abnormal operation. The label contains four important sections:

1. How to enter the configuration menu
2. The description and meaning of the Error Codes
3. The description and meaning of the status display
4. The parameter names and values specific to that unit

Figure 51. ECM engine label

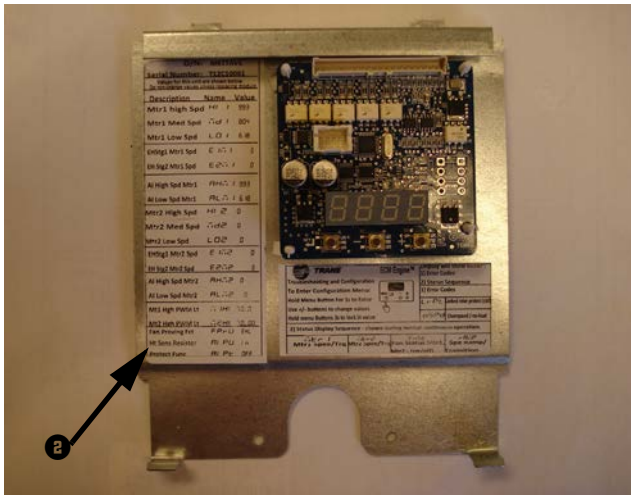

1. To check status, configuration, or to change settings on the engine board with the power on the unit, detach the low voltage access lid and look or reach through the low voltage access panel.
2. The ECM engine label is affixed to the back or front of the low voltage access lid.

Configuration Settings of the ECM Engine Board

⚠WARNING

Safety Alert!

You MUST follow all instructions below. Failure to do so could result in death or serious injury.

All settings take effect immediately, including fan startup and enabling of electric heat. Caution should be taken to stay clear of hazardous voltages, moving parts and electric heat elements while making adjustments to the ECM engine board.

⚠CAUTION

Burn Hazard!

On electric heat units, certain parameter values are locked out to prevent overheating of the unit. These functions will appear to be saved; however, they will not be accepted if the Electric Heat Protection setting is "On". Do not change the Electric Heat Protection setting to "Off" and make changes to the protected settings unless you are programming an unconfigured service replacement board to match the unit settings on a ECM configuration label. Failure to follow this instruction could result in the unit overheating and becoming hot to the touch, which could result in minor or moderate injury, and/or equipment damage.

NOTICE

Equipment Damage!

Do not change the PWM output voltage settings as motor damage could occur.

Note: *The engine board functions and unit specific settings are summarized on the ECM engine configuration label affixed to the back side of the control panel low voltage lid, on every unit.*

The following table lists the parameter names and typical settings of the ECM engine board, for reference only.

Additional Notes:

1. *Do not change the electric heat protection settings if your unit has electric heat.*
2. *If the format setting for rpm values are not correct (i.e., not four-digit: XXXX), please check the operation mode of the ECM engine board* Mod 1 *and* Mod 2 *and motor signal output format* SI 91 *and* SI 92*.*

Table 18. Configuration settings of the motor control board (for reference only)

Description on Unit Label	User Interface Name	Typical User Interface Value	Description	
Mtr 1 High Spd	Hi 1	1080	Sets the high-speed rpm for Motor 1.	Do not exceed 2300 rpm.
Mtr 1 Med Spd	Md 1	777	Sets the medium-speed rpm for Motor 1.	
Mtr 1 Low Spd	Lo 1	632	Sets the low-speed rpm for Motor 1.	Do not set under 600 rpm.
EHStg1 Mtr1 Spd	E1M1	0	Assigns an rpm to be associated with a call for 1st stage electric heat, for Motor 1 (only on units equipped with electric heat).	E1M1, E1M2, E2M1, E2M2 settings are locked out on units with electric heat.
EH Stg 2 Mtr 1 Spd	E2M1	0	Assigns an rpm to be associated with a call for 2nd stage electric heat, for Motor 1 (only on electric heat equipped units).	
AI High Spd Mtr 1	AHM1	0	Sets the maximum rpm for Motor 1 for the maximum input value of the analog input.	Analog inputs below the uFLr setting will be rejected.
AI Low Spd Mtr 1	ALM1	0	Sets the minimum turn-on rpm for Motor 1, when the analog input becomes active.	
Mtr 2 Hgh Spd	Hi 2	0	Sets the high-speed rpm for Motor 2.	Blower coils have only one motor.
Mtr 2 Med Spd	Md 2	0	Sets the medium-speed rpm for Motor 2.	
Mtr 2 Low Spd	Lo 2	0	Sets the low-speed rpm for Motor 2.	
EHStg1 Mtr2 Spd	E1M2	0	Assigns an rpm to be associated with a call for 1st stage electric heat, for Motor 2 (only on electric heat equipped units).	If the unit has only one motor, all seven speed settings for the second motor (Hi 2, Md 2, Lo 2, E1M2, E2M2, ALM2, AHM2) should be set to zero.
EH Stg 2 Mtr 2 Spd	E2M2	0	Assigns an rpm to be associated with a call for 2nd stage electric heat, for Motor 2 (only on electric heat equipped units).	
AI High Spd Mtr 2	AHM2	0	Sets the maximum rpm for Motor 2 for the maximum input value of the analog input.	
AI Low Spd Mtr 2	ALM2	0	Sets the minimum turn-on rpm for Motor 2, when the analog input becomes active.	
Op Mode Mtr 1	Mod1	rPM	Sets the operational mode for Motor 1.	Must be set to rPM for blower coil units.
Op Mode Mtr 2	Mod2	rPM	Sets the operational mode for Motor 2.	Must be set to rPM for blower coil units.
Mtr 1 Out Format	S191	PWM	Sets the interface type for Motor 1.	Must be set to PWM for blower coil units.
Mtr 2 Out Format	S192	PWM	Sets the interface type for Motor 2	Must be set to PWM for blower coil units.
Mtr 1/2 PWM Freq.	FrE9	100	Sets the PWM frequency, for cases when the PWM outputs are used.	On blower coil units, the PWM must not be changed.
Mtr 1 PWM Volt	M1uL	5	Sets the PWM voltage, for cases when the PWM outputs are used.	This setting must NOT be changed, as damage to the motor may occur!
Mtr 2 PWM Volt	M2uL	5	Sets the PWM voltage, for cases when the PWM outputs are used.	This setting must NOT be changed, as damage to the motor may occur!
Mt1 Hgh PWM Lt	M1Hi	90	Sets the maximum output percentage that the controller will request from Motor 1.	This envelope protection value should not be altered.
Mt1 Low PWM Lt	M1Lo	14.5	Sets the minimum maximum output percentage that the controller will request from Motor 1.	This envelope protection value should not be altered.
Mt2 Hgh PWM Lt	M2Hi	90	Sets the maximum output percentage that the controller will request from Motor 2.	This envelope protection value should not be altered.
Mt2 Low PWM Lt	M2Lo	14.5	Sets the minimum maximum output percentage that the controller will request from Motor 2.	This envelope protection value should not be altered.
Mt1 Ovspd RPM	rPM1	2500	Selects the rpm above which the Motor 1 will be assumed to be in an overspeed condition and will need to be shut down.	This envelope protection value should not be altered.
Mt2 Ovspd RPM	rPM2	2500	Selects the rpm above which the Motor 2 will be assumed to be in an overspeed condition and will need to be shut down.	This envelope protection value should not be altered.
Fan Proving Fct	FPru	FnSt	Selects which mode should be assigned to the Binary output circuit, depending on unit type.	This setting has to be correct for proper unit operation of electric heat and changeover units.

Table 18. Configuration settings of the motor control board (for reference only) (continued)

Description on Unit Label	User Interface Name	Typical User Interface Value	Description	
AI Boost Amp	A.Sc	1	Boosts or attenuates the analog input signal to compensate for long wire runs.	A value of 1 should be used if no voltage level compensation is needed (i.e., voltage peak is at 10 Vdc).
AI Floor	uFLr	0.5	Rejects noise on the analog input lines and sets up the motor control board to turn on if the thermostat or controller is commanding its analog outputs on.	
PulsePerRev	FdbH	18	Sets up the tachometer function to be compatible with the on-board motor and for correct speed calculation and calibration.	Do not change this setting as this is critical to proper unit operation.
P Value Mtr 1	PuL 1	0.03	Sets up the on board closed loop control to control Motor 1 with proper stability.	Do not change this setting.
I Value Mtr 1	I uL 1	0.03	Sets up the on board closed loop control to control Motor 1 with proper stability.	Do not change this setting.
P Value Mtr 2	PuL2	0.03	Sets up the on board closed loop control to control Motor 2 with proper stability.	Do not change this setting.
I Value Mtr 2	I uL2	0.03	Sets up the on board closed loop control to control Motor 2 with proper stability.	Do not change this setting.
Ht Sens Mk Val F	A.2ñ	85	Sets the make value for the motor control board triac output based on the thermistor input.	Operation also depends on FPru, A.2b, and A.PU settings.
Ht Sens Bk Val F	A.2b	90	Sets the break value for the motor control board triac output based on the thermistor input.	Operation also depends on FPru, A.2ñ, and A.PU settings.
Ht Sens Resistor	A.PU	oUt	Sets the input impedance of the thermistor input.	Should be pre-set to "OUT" for Tracer® ZN controllers.
Mt 1 Ramp %/sec	ñ1rP	3	Sets the ramp rate for Motor 1, in % per second.	
Mt 2 Ramp %/sec	ñ2rP	3	Sets the ramp rate for Motor 2, in % per second	
EH Ramp Accel	EhrP	2	Sets the acceleration factor for the electric heat inputs.	Is used to force faster ramps when electric heat is requested.
Ramp MAX Time	ñhrP	15	Sets the maximum ramp time for both Motor 1 and Motor 2 (in seconds).	Overrides the ramp rates ñ1rP and ñ2rP if the calculated ramp time exceeds ñhrP.
EH Fan off delay	EHdL	15	Selects how long the fan needs to stay on after an electric heat request has been turned off.	
Lck Rtr Protect	LrPt	on	Selects whether to use the on-board locked rotor protection function.	This will shut down the affected motor, if rotational response is not detected.
Protect Funct	EhPt	on	This function protects settings on the board that affect the safety of the electric heat system.	Do NOT change this setting. This setting locks out the following parameters from being changed, for safe operation of the unit. A.PU FPru A.ñH A.bH E1ñ1 E1ñ2 E2ñ1 E2ñ2 S.9 ñod1 ñod2 ñ1H1 ñ1Lo

Table 18. Configuration settings of the motor control board (for reference only) (continued)

Description on Unit Label	User Interface Name	Typical User Interface Value	Description	
Protect Funct	EhPt	FLA	This his function protects settings on the board that affect the safety of the electric heat system, and limit the maximum current the motor will draw under any operating condition.	Do NOT change this setting. This setting locks out the following parameters from being changed, for safe operation of the unit. E 1n1 E2n1 E 1n2 E2n2 n0d1 n0d2 SI 91 SI 92 n1HI n1LO n2HI n2LO FPru A 12n A 12b AI PU
Rmp dft (auto rst)	rPdF	oFF	This function shortens the ramps for faster unit commissioning and auto-resets to off after approximately 15 minutes of power-on operation.	To aid in commissioning of the unit, for approximately 10–15 minutes, the ramps will be shortened to quickly observe proper unit behavior and response to speeds.
Soft Rev	SoFt	uH_HH	Displays the software version.	Module should be received with most recent version.

Fan Speed Response Verification

1. After performing controller specific commissioning, observe the display on the ECM engine board with the power on, to the unit. The ECM engine display should display a looping status indicator as follows:

   ntr 1 → 0 → ntr2 → 0 → FSt 1 → 0 FF → FSt2 →
   OFF → EhEn → On

Notes:

- *The* EhEn *indicator is unit-specific and may indicate "Off" at this point; refer to thermistor function for more information.*
- *A representative fan speed of "1050" rpm are shown in the following example. Each unit is factory-configured differently and will have different settings for different fan speeds.*

2. While the unit remains on, exercise the fan controls on the unit, either directly or indirectly through request for unit heat/cool. Observe the fan spinning, and then observe the fan display on the ECM engine board. It should display a looping status indicator as follows:

   For any size unit (using typical unit operating fan speeds):

   ntr 1 → 1050 → ntr2 → 0 → FSt 1 → On → FSt2 →
   OFF → EhEn → On

Note: *The* EhEn *indicator is unit-specific and may indicate "Off" at this point; refer to thermistor function for more information.*

3. *OPTIONAL:*

   While the fan is running, if practical, change the fan speeds and observe the display temporarily indicate: rAnP

   Exercise all fan speeds to ensure positive unit response and to validate any field wiring.

Congratulations! Your new Trane BLDC Engine/Motor system is performing properly.

Pre-Start

Before energizing the unit, the following system devices must be checked:

- ☐ Is the high voltage power supply correct and in accordance with the nameplate ratings?
- ☐ Is the field wiring and circuit protection the correct size?
- ☐ Is the low voltage control circuit wiring correct per the unit wiring diagram?
- ☐ Is the piping system clean/complete and correct?
- ☐ Is unit serviceable? (see the Dimensions and Weights information).
- ☐ Are all the unit access panels secure and in place?
- ☐ Is the water flow established and circulating through all the units?
- ☐ Is the condensate line properly sized, run, trapped and pitched?
- ☐ Does the indoor blower turn freely without rubbing?
- ☐ Has all work been done in accordance with applicable local and national codes?
- ☐ Has heat transfer fluid been added in the proper mix to prevent freezing if required?

Startup

Unit Startup

Thermostat

Thermostat Operation

Auto: Fan will automatically adjust the fan speed (Low, Medium, High) based on the set point and room temperature. The more the room temperature is from the set point the faster the fan will operate. The fan will be off in OFF mode.

Figure 52. Thermostat

Unit Mounted Thermostat

Wall Mounted Thermostat

Configuration Mode

The configuration mode is used to set the thermostat to match your heating/cooling system.

To configure the thermostat perform the following steps:

1. Verify the thermostat is in the OFF mode. Press the SYS (left) button until off mode displays.
2. Press the PROG button for 5 seconds while the thermostat is in OFF mode.
3. Press the up or down button to change settings within each screen.
4. Press the PROG button to advance to the next screen.

   Note: *Note: Pressing the SYS button will return you to the previous screen.*
5. Press the PROG switch for 5 seconds to exit configuration mode.

Configuration Mode Settings

1 – System

Select the type of operation you require.

1. Heat Only is for a system with only heating.
2. Cool Only is for a system with only cooling.
3. 2-Pipe Seasonal Changeover is for a 2 pipe system that handles both heating and cooling. The thermostat selects whether the system will be set to heat or set to cool based on the pipe sensor temperature.
4. 2-Pipe Manual Changeover with Auxiliary is for a 2 pipe system that handles both heating and cooling. The user selects whether the system will be set to heat or set to cool. If set to heat and the pipe sensor indicates there is not heat, the auxiliary output will be turned ON.
5. 4-Pipe Auto Changeover is for a 4 pipe system. The user selects whether the system will be set to heat, cool, heat and cool or OFF.
   - "1" Heat only
   - "2" Cool only
   - "4" 2-pipe seasonal changeover

2 – Temperature Scale

This thermostat can function in Fahrenheit and Celsius.

- F = Fahrenheit (Default)
- C = Celsius

3 – Valve Type

This thermostat operates with Normally Open or Normally Closed valves. Select the correct valve type for your system.

- no = Normally Open (Default)
- nc = Normally Closed
- "5" 2-pipe seasonal changeover w auxiliary
- "6" 4-pipe manual changeover
- "7" 4-pipe auto changeover (Default)

4 – Temperature Sensor

Select the type of room temperature sensor you are using.

- o = On board temperature sensor (Default)
- r = Remote temperature sensor

6 – Pipe Sensor (Y/N) (for 2 pipe system only)

Select whether you are using a pipe sensor to monitor the pipe temperature.

- n = No Pipe Sensor Connected
- y = Pipe Sensor Connected (Default)
- 7 – Pipe Sensor Cooling

Pipe temperature below this setting is considered to be cooling. If pipe sensor temperature is above this selected temperature for more than the Pipe Sensor Delay Time the cool valve will be turned OFF.

Changes setting between 50°F and 65°F (10.0°C and 18.0°C) Default: 60

8 – Pipe Sensor Heating

Pipe temperature above this setting is considered to be heating. If pipe sensor temperature is below this selected temperature for more than the Pipe Sensor Delay Time the heat valve will be turned off.

Changes setting between 70°F and 90°F (21.0°C and 32.0°C) Default: 80

9 – Pipe Sensor Delay Time

This is the time that the valve will be open to verify the pipe temperature before the valve is turned off. This gives time for circulation through the system.

Changes setting between 0 and 5 minutes at 1 minute intervals Default: 5

10 – 1st-Stage Differential

Differential is the number of degrees between the set point temperature and the turn on temperature.

Changes setting between d1°F and d6°F (0.5°C and 3.0°C) Default: d1°F

11 – Dead Band

Dead band is the minimum number of degrees allowed between heat set point and cool set point in auto changeover operation.

Select setting between 0°F and 9°F (0.0°C and 4.5°C) Default: 4°F

Note: *Only appears when system is set to 7*

12 – Minimum Set Point Cooling (Lower Limit)

The minimum cooling set point can be limited so the cooling cannot be set too low.

Adjust setting between 45°F and 90°F (7.0°C and 32.0°C) Default: 45°F

Note: *Will not appear when system is set to 1*

13 – Maximum Set Point Heating Upper Limit)

The maximum heating set point can be limited so the heating cannot be set too high.

Adjust setting between 45°F and 90°F (7.0°C and 32.0°C) Default: 90°F

Note: *Will not appear when system is set to 2*

14 – Temperature Calibration

The room temperature can be offset to display a different temperature. Example: 70F room temperature with -2 setting displays 68F.

Changes displayed room temperature between -9°F and 9°F (-4.5°C and 4.5°C) Default: 0°F

15 – Lock Feature

Thermostat can be locked so temperature, configurations and mode cannot be changed. Thermostat must be locked for this setting to take affect (see Lockout Feature)

0-9 - number of degrees that can be adjusted, mode cannot be changed

Cool-Heat – can adjust up to max heat and min cool but cannot change mode Default: 0

16 – Temperature Display

Select whether to display room temperature only, set point temperatures only or both.

- "S" Display set point only
- "r" Display room temperature only
- "rS" Display set point and room temperature Default: "rS"

17 – Valve Purge

Select time to open valves during inactivity period. This feature purges the lines so water does not become stagnant and helps keeps valves from sticking.

- "0" Disabled (Default)
- "1" 1 minute every 24 hours
- "3" 3 minutes every 24 hours

Thermostat Button Function

Figure 53. Fan speed control

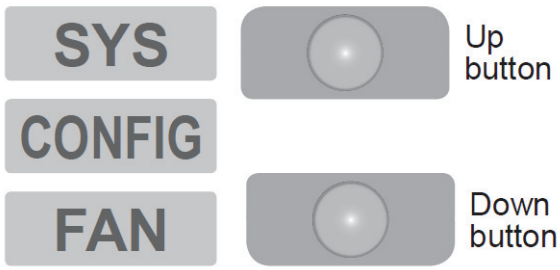

UP – Used to increase the set temperatures and to adjust configuration settings.

DOWN – Used to decrease the set temperatures and to adjust configuration settings.

SYS – Used to change from OFF, HEAT, COOL and AUTO changeover modes.

CONFIG – Used to enter configuration and advance to the next configuration screen.

FAN – Used to turn the fan on and off. Also used to cycle through fan speeds

SYS then CONFIG – Held in simultaneously for 10 seconds to lock and unlock the thermostat.

Up and Down – Pressed simultaneously to display pipe sensor temperature if pipe sensor is connected.

Operating Mode

There are four possible operation modes for the SC900V-24V. OFF, Cool, Heat, and Cool and Heat modes are accessed by pressing the SYS button.

Note: *The modes are accessible based on configuration.*

OFF

In OFF mode, the thermostat will not turn on the heating or cooling devices.

Note: *The fan (when configured as continuous fan) can be turned on manually in off mode by pressing the*

FAN button. The word FAN shows on the display and the fan icon appears when the fan operates.

Heat Mode

In Heat mode, the thermostat controls the heating system. When the heat outputs, the flame icon appears on the display.

Cool Mode

In Cool mode, the thermostat controls the cooling system. When the cooling outputs, the snowflake icon appears on the display.

Heat and Cool Mode

In Heat and Cool mode, the thermostat can automatically turn on heat or cool as needed. AUTO appears on display with heat set point and cool set point.

Fan Mode

Only use auto fan mode. The fan speed is determined by the number of degrees the room temperature differs from the set point.

Tracer® ZN520 Unit Startup

Refer to the most recent version of Trane publication CNT-SVX04*-EN. The factory pre-programs the ZN520 with default values to control the temperature and unit airflow. Use Tracer® Summit building automation system or Rover™ software to change the default values.

Follow the procedure below to operate the ZN520 in a stand-alone operation:

1. Turn power on at the disconnect switch option.
2. Position the fan mode switch to either high, medium, low, or the auto position.
3. Rotate the setpoint dial on the zone sensor module to 55°F for cooling or 85°F for heating.

The appropriate control valve will actuate assuming the following conditions:

1. Room temperature should be greater than 55°F and less than 85°F.
2. For a 2-pipe fan-coil unit with an entering water temperature sensor, the water temperature input is appropriate for the demand placed on the unit. For example, cooling operation is requested and cold water (5° lower than room temperature) flows into the unit.
3. Select the correct temperature setpoint.

Note: *Select and enable zone sensor temperature settings to prevent freeze damage to unit.*

Tracer® UC400 Unit Startup

Refer to the most recent version of Trane publication BAS-SVX48*-EN for Tracer® UC400 unit ventilator. The factory pre-programs the Tracer® UC400 unit ventilator with default values to control the temperature and unit airflow. Use Tracer® SC building automation system or Tracer® TU software to change the default values.

Follow the procedure below to operate the Tracer® UC400 in a stand-alone operation:

1. Turn power on at the disconnect switch option.
2. Position the fan mode switch to either high, medium, low, or the auto position.
3. Rotate the setpoint dial on the zone sensor module to 55°F for cooling or 85°F for heating.

The appropriate control valve will actuate assuming the following conditions:

1. Room temperature should be greater than 55°F and less than 85°F.
2. For a 2-pipe fan-coil unit with an entering water temperature sensor, the water temperature input is appropriate for the demand placed on the unit. For example, cooling operation is requested and cold water (5° lower than room temperature) flows into the unit.
3. Select the correct temperature setpoint.

Note: *Select and enable zone sensor temperature settings to prevent freeze damage to unit.*

General Information

Fan Mode Switch Operation

OFF

Fan is turned OFF, two-position damper option spring-returns closed.

Hi, Med, Lo

Fan runs continuously at the selected speed. The two-position damper option opens to an adjustable mechanical stop position.

Tracer® ZN520 Operation

OFF

Fan is OFF; control valve options and fresh air damper options close. The low air temperature detection option is still active.

Auto

Fan speed control in the auto setting allows the modulating (3-wire floating point) or 2–position control valve option and three-speed fan to work cooperatively to meet precise capacity requirement, while minimizing fan speed (motor/energy/acoustics) and valve position (pump energy, chilled water reset). As the capacity requirement increases at low fan speed, the water valve opens. When the low fan speed capacity switch point is reached, the fan switches to medium speed and the water valve repositions to maintain an equivalent capacity. The reverse sequence takes place with a decrease in required capacity.

Low/Med/High

The fan runs continuously at the selected speed and the valve option will cycle to meet setpoint.

UC400 Controller Operation

OFF

Fan is OFF; control valve options and fresh air damper options close. The low air temperature detection option is still active.

Auto

Fan speed control in the auto setting allows the modulating (3-wire floating point) or 2-position control valve option and 1-, 2-, 3- or variable-speed fan to work cooperatively to meet precise capacity requirement, while minimizing fan speed (motor/energy/acoustics) and valve position (pump energy, chilled water reset). As the capacity requirement increases, the water valve opens. When the fan speed capacity switch points are reached, the fan speed ramps up and the water valve repositions to maintain an equivalent capacity. The reverse sequence takes place with a decrease in required capacity.

Low/Med/High

The fan runs continuously at the selected speed and the valve option will cycle to meet setpoint.

Tracer® ZN520 Sequence of Operation

The Tracer® ZN520 operates the fan in the following modes:

1. occupied
2. unoccupied
3. occupied standby
4. occupied bypass
5. Tracer® Summit with supply fan control

Occupied (Tracer® ZN520)

When the controller is in the occupied mode, the unit attempts to maintain the space temperature at the active occupied heating or cooling setpoint, based on the measured space temperature, the discharge air temperature, the active setpoint, and the proportional/integral control algorithm. The modulating control algorithm used when occupied or in occupied standby is described in the following sections. Additional information related to the handling of the controller setpoints can be found in the previous Setpoint operation section.

Unoccupied Mode (Tracer® ZN520)

When the controller is in the unoccupied mode, the controller attempts to maintain the space temperature at the stored unoccupied heating or cooling setpoint, based on the measured space temperature, the active setpoint and the control algorithm, regardless of the presence of a hard-wired or communicated setpoint. Similar to other configuration properties of the controller, the locally stored unoccupied setpoints can be modified using Rover service tool.

In unoccupied mode, a simplified zone control algorithm is run. During the cooling mode, when the space temperature is above the cool setpoint, the primary cooling capacity operates at 100 percent. If more capacity is needed, the supplementary cooling capacity turns on (or opens to 100 percent). During the heating mode, when the space temperature is below the heat setpoint, the primary heating capacity turns on. All capacity is turned off when the space temperature is between the unoccupied cooling and heating setpoints. Note that primary heating or cooling capacity is defined by unit type and whether heating or cooling is enabled or disabled. For example, if the economizer is enabled and possible, it will be the primary cooling capacity. If hydronic heating is possible, it will be the primary heating capacity.

Occupied Standby Mode (Tracer® ZN520)

The controller can be placed into the occupied standby mode when a communicated occupancy request is combined with the local (hard-wired) occupancy binary input signal. When the communicated occupancy request is unoccupied, the occupancy binary input (if present) does not affect the controller's occupancy. When the communicated occupancy request is occupied, the controller uses the local occupancy binary input to switch between the occupied and occupied standby modes.

During occupied standby mode, the controller's economizer damper position goes to the economizer standby minimum position. The economizer standby minimum position can be changed using Rover service tool.

In the occupied standby mode, the controller uses the occupied standby cooling and heating setpoints. Because the occupied standby setpoints typically cover a wider range than the occupied setpoints, the Tracer® ZN520 controller reduces the demand for heating and cooling the space. Also, the outdoor air economizer damper uses the economizer standby minimum position to reduce the heating and cooling demands.

When no occupancy request is communicated, the occupancy binary input switches the controller's operating mode between occupied and unoccupied. When no communicated occupancy request exists, the unit cannot switch to occupied standby mode.

Occupied Bypass Mode (Tracer® ZN520)

The controller can be placed in occupied bypass mode by either communicating an occupancy request of Bypass to the controller or by using the timed override On button on the Trane zone sensor.

When the controller is in unoccupied mode, you can press the On button on the zone sensor to place the controller into occupied bypass mode for the duration of the bypass time (typically 120 minutes).

Occupancy Sources (Tracer® ZN520)

There are four ways to control the controller's occupancy:

- Communicated request (usually provided by the building automation system or peer device)
- By pressing the zone sensor's timed override On button
- Occupancy binary input
- Default operation of the controller (occupied mode)

A communicated request from a building automation system or another peer controller can change the controller's occupancy. However, if communication is lost, the controller reverts to the default operating mode (occupied) after 15 minutes (configurable, specified by the "receive heartbeat time"), if no local hard-wired occupancy signal exists.

A communicated request can be provided to control the occupancy of the controller. Typically, the occupancy of the controller is determined by using time-of-day scheduling of the building automation system. The result of the time-of-day schedule can then be communicated to the unit controller.

Tracer® Summit with Supply Fan Control (Tracer® ZN520)

If the unit is communicating with Tracer® Summit and the supply fan control programming point is configured for Tracer® (the factory configures as local), Tracer® Summit will control the fan regardless of the fan mode switch position.

When the fan mode switch is set to Off or when power is restored to the unit, all Tracer® ZN520 lockouts (latching diagnostics) are manually reset. The last diagnostic to occur is retained until the unit power is disconnected. Refer to Trane publication, CNT-SVX04*-EN for specific instructions regarding the procedure for running the Tracer® ZN520.

Cooling Operation (Tracer® ZN520)

The heating and cooling setpoint high and low limits are always applied to the occupied and occupied standby setpoints. During the cooling mode, the Tracer® ZN520 controller attempts to maintain the space temperature at the active cooling setpoint. Based on the controller's occupancy mode, the active cooling setpoint is one of the following:

- Occupied cooling setpoint
- Occupied standby cooling setpoint
- Unoccupied cooling setpoint

The controller uses the measured space temperature, the active cooling setpoint, and discharge air temperature along with the control algorithm to determine the requested cooling capacity of the unit (0 percent–100 percent). The outputs are controlled based on the unit configuration and the required cooling capacity. To maintain space temperature control, the Tracer® ZN520 cooling outputs (modulating hydronic valve, two-position hydronic valve, or outdoor air economizer damper) are controlled based on the cooling capacity output.

The cooling output is controlled based on the cooling capacity. At 0 percent capacity, all cooling capacities are off and the damper is at minimum position. Between 0 percent and 100 percent capacity, the cooling outputs are controlled according to modulating valve logic (modulating valves) or cycled on (2-position valves). As the load increases, modulating outputs open further and binary outputs are energized longer. At 100 percent capacity, the cooling valve or damper is fully open (modulating valves) or on continuously (and 2-position valves).

Unit diagnostics can affect fan operation, causing occupied and occupied standby fan operation to be

defined as abnormal. Refer to Troubleshooting Wireless Controls for more information about abnormal fan operation.

The Tracer® ZN520 controller operates the supply fan continuously when the controller is in the occupied and occupied standby modes, for either heating or cooling. The controller only cycles the fan off with heating and cooling capacity in the unoccupied mode.

The economizer is used for cooling purposes whenever the outdoor temperature is below the economizer enable setpoint and there is a need for cooling. The economizer is used first to meet the space demand, and other forms of cooling are used if the economizer cannot meet the demand alone. See modulating outdoor air damper operation for additional information.

Cascade cooling control initiates a discharge air tempering function if the discharge air temperature falls below the discharge air temperature control low limit, all cooling capacity is at minimum, and the discharge control loop determines a need to raise the discharge air temperature. The controller then provides heating capacity to raise the discharge air temperature to its low limit.

Discharge Air Tempering (Tracer® ZN520)

The discharge air tempering function enables when cold outdoor air is brought in through the outdoor air damper, causing the discharge air to fall below the discharge air temperature control low limit. The controller exits the discharge air tempering function when heat capacity has been at 0 percent for five minutes.

Heating Operation (Tracer® ZN520)

During heating mode, the Tracer® ZN520 controller attempts to maintain the space temperature at the active heating setpoint. Based on the occupancy mode of the controller, the active heating setpoint is one of the following:

- Occupied heating
- Occupied standby heating
- Unoccupied heating

During dehumidification in the heating mode, the controller adjusts the heating setpoint up to the cooling setpoint. This reduces the relative humidity in the space with a minimum of energy usage.

The controller uses the measured space temperature, the active heating setpoint, and discharge air temperature, along with the control algorithm, to determine the requested heating capacity of the unit (0 percent–100 percent). The outputs are controlled based on the unit configuration and the required heating capacity.

Unit diagnostics can affect the Tracer® ZN520 controller operation, causing unit operation to be defined as abnormal. Refer to the Diagnostics section for more information about abnormal unit operation.

The heating output is controlled based on the heating capacity. At 0 percent capacity, the heating output is off continuously. Between 0 percent and 100 percent capacity, the heating output is controlled according to modulating valve logic (modulating valves) or cycled on (two-position valves). As the load increases, modulating outputs open further and binary outputs are energized longer. At 100 percent capacity, the heating valve is fully open (modulating valves) or on continuously (two-position valves).

The Tracer® ZN520 fan output(s) normally run continuously during the occupied and occupied standby modes, but cycle between high and off speeds with heating/cooling during the unoccupied mode. When in the occupied mode or occupied standby mode and the fan speed is set at the high, medium, or low position, the fan runs continuously at the selected speed. Refer to the Diagnostics section for more information on abnormal fan operation.

When the unit's supply fan is set to auto, the controller's configuration determines the fan speed when in the occupied mode or occupied standby mode. The fan runs continuously at the configured heating fan speed or cooling fan speed. For all fan speed selections except off, the fan cycles off during unoccupied mode.

The economizer outdoor air damper is never used as a source of heating. Instead, the economizer damper (when present) is only used for ventilation; therefore, the damper is at the occupied minimum position in the occupied mode. The damper control is primarily associated with occupied fan operation.

Fan Mode Operation (Tracer® ZN520)

For multiple fan speed applications, the Tracer® ZN520 controller offers additional fan configuration flexibility. Separate default fan speeds for heating and cooling modes can be configured. The fan runs continuously for requested speeds (off, high, medium, or low). When the fan mode switch is in the Auto position or a hard-wired fan mode input does not exist, the fan operates at the default configured speed. See the following table for default fan configuration for heat and cool mode. During unoccupied mode, the fan cycles between high speed and off with heating and cooling fan modes. If the requested speed is off, the fan always remains off.

Table 19. Fan configuration (Tracer® ZN520)

	Auto Fan Operation	Fan Speed Default
Heating	Continuous	Off Low Medium High
Cooling	Continuous	Off Low Medium High

During dehumidification, when the fan is on Auto, the fan speed can switch depending on the error. Fan speed increases as the space temperature rises above the active cooling setpoint.

Additional flexibility built into the controller allows you to enable or disable the local fan switch input. The fan mode request can be either hard-wired or communicated to the controller. When both are present, the communicated request has priority over the hard-wired input. See the following table for more information.

Table 20. Local fan switch enabled (Tracer® ZN520)

Communicated Fan Speed Input	Fan Switch (Local)	Fan Operation
Off	Ignored	Off
Low	Ignored	Low
Medium	Ignored	Medium
High	Ignored	High
Auto	Off	
Low		
Medium		
High		
Auto	Off	
Low		
Medium		
High		
Auto (configured default, determined by heat/cool mode)		

Table 21. Fan operation in heating and cooling modes (Tracer® ZN520)

	Heating		Cooling	
Fan Mode	Occ.	Unocc.	Occ.	Unocc.
Off	Off	Off	Off	Off
Low	Low	Off/high	Low	Off/high
Medium	Med	Off/high	Med	Off/high
High	High	Off/high	High	Off/high
Auto	Default fan sp.	Off/high	Default fan sp.	Off/high

Table 22. Local fan switch disabled or not present (Tracer® ZN520)

Communicated Fan Speed Input	Fan Operation
Off	Off
Low	Low
Medium	Medium
High	High
Auto (or not present)	Auto (fan runs at the default speed)

Continuous Fan Operation (Tracer® ZN520)

During occupied and occupied standby modes, the fan normally is on. For multiple speed fan applications, the fan normally operates at the selected or default speed (off, high, medium, or low). When fan mode is auto, the fan operates at the default fan speed.

During unoccupied mode, the controller controls the fan off. While unoccupied, the controller heats and cools to maintain the unoccupied heating and cooling setpoints. In unoccupied mode, the fan is controlled on high speed only with heating or cooling.

The unit fan is always off during occupied, occupied standby, and unoccupied modes when the unit is off due to a diagnostic or when the unit is in the off mode due to the local zone sensor module, a communicated request, or the default fan speed (off).

If both a zone sensor module and communicated request exist, the communicated request has priority.

Fan Cycling Operation (Tracer® ZN520)

Tracer® ZN520 does not support fan cycling in occupied mode. The fan cycles between high speed and off in the unoccupied mode only. The controller's cascade control algorithm requires continuous fan operation in the occupied mode.

Fan Off Delay (Tracer® ZN520)

When a heating output is controlled off, the Tracer® ZN520 controller automatically holds the fan on for an additional 30 seconds. This 30-second delay gives the fan time to blow off any residual heat from the heating source, such as a steam coil. When the unit is heating, the fan off delay is normally applied to control the fan; otherwise, the fan off delay does not apply.

Fan Start on High Speed (Tracer® ZN520)

On a transition from off to any other fan speed, the Tracer® ZN520 controller automatically starts the fan on high speed and runs the fan at high speed for 0.5 seconds. This provides the ample torque required to start all fan motors from the off position.

Entering Water Temperature Sampling Function (Tracer® ZN520)

Only units using the main hydronic coil for both heating and cooling (2-pipe changeover and 4-pipe changeover units) use the entering water temperature sampling function. Two-pipe changeover and 4-pipe changeover applications allow the main coil to be used for heating and for cooling; therefore, these applications require an entering water temperature sensor.

When three-way valves are ordered with a Tracer® ZN520 control, the controller is factory-configured to disable the entering water temperature sampling function, and the entering water sensor is mounted in the proper location. Disabling entering water temperature sampling eliminates unnecessary water flow through the main coil when three-way valves are used.

The controller invokes entering water temperature sampling only when the measured entering water temperature is too cool to heat or too warm to cool. Entering water is cold enough to cool when it is five degrees below the measured space temperature. Entering water is warm enough to heat when it is five degrees above the measured space temperature.

When the controller invokes the entering water temperature sampling function, the unit opens the main hydronic valve for no more than three minutes before considering the measured entering water temperature. An initial stabilization period is allowed to flush the coil. This period is equal to 30 seconds plus half of the valve stroke time. Once this temperature stabilization period has expired, the controller compares the entering water temperature against the effective space temperature (either hard-wired or communicated) to determine whether the entering water can be used for the desired heating or cooling. If the water temperature is not usable for the desired mode, the controller continues to compare the entering water temperature against the effective space temperature for a maximum of three minutes.

The controller automatically disables the entering water temperature sampling and closes the main hydronic valve when the measured entering water exceeds the high entering water temperature limit (110°F). When the entering water temperature is warmer than 110°F, the controller assumes the entering water temperature is hot because it is unlikely the coil would drift to a high temperature unless the actual loop temperature was very high.

If the entering water temperature is unusable—too cool to heat or too warm to cool—the controller closes the hydronic valve and waits 60 minutes before initializing another sampling. If the controller determines the entering water temperature is valid for heating or cooling, it resumes normal heating/cooling control and effectively disables entering water temperature sampling until it is required.

Electric Heat Operation (Tracer® ZN520)

The Tracer® ZN520 controller supports one or two-stage electric heat operation for heating. To control the space temperature, electric heat is cycled to control the discharge air temperature. The rate of cycling is dependent upon the load in the space and the temperature of the incoming fresh air from the economizer (if any). Two-pipe changeover units with electric heat use the electric heat only when hot water is not available.

Manual Fresh Air Damper (Tracer® ZN520)

Units with the manual fresh air damper option ship with the damper in the closed position, which is adjustable from zero to 100 percent in 25 percent increments. To adjust the position, first remove the air filter to expose the damper stop screw on the control panel end. Relocate the stop screw to the appropriate position. Then loosen the stop screw wingnut and adjust the linkage.

Economizer Damper Option (Tracer® ZN520)

With a valid outdoor air temperature (either hard-wired or communicated), Tracer® ZN520 uses the modulating economizer damper as the highest priority source of cooling. Economizer operation is only possible through the use of a modulating damper.

Economizing is possible during the occupied, occupied standby, unoccupied, and occupied bypass modes.

The controller initiates the economizer function if the outdoor air temperature is cold enough to be used as free cooling capacity. If the outdoor air temperature is less than the economizer enable setpoint (absolute dry bulb), the controller modulates the outdoor air damper (between the active minimum damper position and 100 percent) to control the amount of outdoor air cooling capacity. When the outdoor air temperature rises 5°F above the economizer enable point, the controller disables economizing and moves the outdoor air damper back to its predetermined minimum position based on the current occupancy mode or communicated minimum damper position.

Table 23. Relationship between outdoor temperature sensors and damper position (Tracer® ZN520)

Outdoor Air Temp.	Modulating Outdoor Air Damper		
	Occupied or Occupied Bypass	Occupied Standby	Unoccupied
None or invalid	Open to occupied minimum position	Open to occupied standby minimum position	Closed
Failed	Open to occupied minimum position	Open to occupied standby minimum position	Closed
Present and economizing feasible	Economizing minimum postion to 100%	Economizing between occupied standby minimum position to 100%	Open & economizing when unit is operating, closed
Present & economizing not feasible	Open to occupied minimum position	Open to occupied standby minimum position	Closed

Dehumidification (Tracer® ZN520)

Dehumidification is possible when mechanical cooling is available, the heating capacity is located in the reheat position, and the space relative humidity setpoint is valid.The controller starts dehumidifying the space when the space humidity exceeds the humidity setpoint.

The controller continues to dehumidify until the sensed humidity falls below the setpoint minus the relative humidity offset.The controller uses the cooling and reheat capacities simultaneously to dehumidify the space. While dehumidifying, the discharge air temperature is controlled to maintain the space temperature at the current setpoint.

A typical scenario involves high humidity and high temperature load of the space.The controller sets the cooling capacity to 100 percent and uses the reheat capacity to warm the discharge air to maintain space temperature control. Dehumidification may be disabled via Tracer® or configuration.

Note: *If the unit is in the unoccupied mode, the dehumidification routine will not operate.*

Data Sharing (Tracer® ZN520)

Because this controller utilizes LONWORKS® technology, the controller can send or receive data (setpoint, heat/cool mode, fan request, space temperature, etc.) to and from other controllers on the communication link, with or without the existence of a building automation system. This applies to applications where multiple unit controllers share a single space temperature sensor (for rooms with multiple units but only one zone sensor) for both standalone (with communication wiring between units) and building automation system applications. For this application you will need to use the Rover service tool. For more information on setup, refer to the Trane publication EMTX-SVX01*-EN.

Binary Inputs (Tracer® ZN520)

The Tracer® ZN520 controller has four available binary inputs. Normally, these inputs are factory-configured for the following functions:

- Binary input 1: Low temperature detection (freezestat)
- Binary input 2: Condensate overflow
- Binary input 3: Occupancy/ Generic
- Binary input 4: Fan status

Note: *The generic binary input can be used with a Tracer® Summit building automation system only.*

Each binary input default configuration (including normally open/closed) is set at the factory. However, you can configure each of the four binary inputs as normally open or normally closed. The controller will be set properly for each factory-supplied binary input end-device. When no device is connected to the input, configure the controller's input as not used.

Table 24. Binary input configurations (Tracer® ZN520)

Binary Input	Description	Configuration	Controller Operation	
			Contact Closed	Contact Open
BI 1	Low temperature detection(a)	Normally closed	Normal	Diagnostic(b)
BI 2	Condensate overflow(a)	Normally closed	Normal	Diagnostic(b)
BI 3	Occupancy	Normally open	Unoccupied	Occupied
BI 3	Generic binary input	Normally open	Normal(c)	Normal(c)
BI 4	Fan status(a)	Normally open	Normal	Diagnostic(d)

Note: The occupancy binary input is for standalone unit controllers as an occupied/unoccupied input. However, when the controller receives a communicated occupied/unoccupied request, the communicated request has priority over the hard-wired input.

(a) During low temperature, condensate overflow, and fan status diagnostics, the Tracer® ZN520 control disables all normal unit operation of the fan, valves, and damper.
(b) The following table shows the controller's response to low temperature detection, condensate overflow, and fan status diagnostics.
(c) The generic binary input does not affect unit operation. A building automation system reads this input as a generic binary input.
(d) If the fan mode input is in the off position or the controller is in the unoccupied mode with the fan off, the fan status input will be open. A diagnostic will not be generated when the controller commands the fan off. A diagnostic will only be generated if the fan status input does not close after one minute from energizing a fan output or any time the input is open for one minute. The controller waits up to one minute after energizing a fan output to allow the differential pressure to build up across the fan.

Binary Outputs (Tracer® ZN520)

Binary outputs are configured to support the following:

- Three fan stages (when one or two fan stages are present, medium fan speed can be configured as exhaust fan)
- One hydronic cooling stage
- One hydronic heating stage (dehumidification requires this to be in the reheat position)
- One DX cooling stage
- One or two-stage electric heat (dehumidification requires this to be in the reheat position)
- Face and bypass damper
- Modulating outdoor air damper
- One baseboard heat stage

Table 25. Binary output configuration (Tracer® ZN520)

Binary Output	Configuration
J1-1	Fan high
J1-2	Fan medium
J1-3	Fan low
J1-4	(Key)
J1-5	Cool valve—open, or 2-position valve(a)
J1-6	Cool valve—close Note 1
J1-9	Heat valve—open, or 2 position valve, or 1st electric heat stage(a)
J1-10	Heat valve—close or 2nd Electric heat stage(a)
J1-11	Fresh air damper—open
J1-12	Fresh air damper—close
TB4-1	Generic/baseboard heat output
TB4-2	24 Vac

(a) For Tracer® ZN520 units configured and applied as 2-pipe hydronic heat/cool changeover, terminals J1-5 and J1-6 are used to control the primary valve for both heating and cooling. For Tracer® ZN520 units configured and applied as 2-pipe hydronic heat/cool changeover with electric heat, terminals J1-5 and J1-6 are used to control the primary valve (for both cooling and heating), and terminals J1-9 and J1-10 are used only for the electric heat stage. For those 2-pipe changeover units, electric heat will not be energized while the hydronic supply is hot (5° or more above the space temperature).

Table 26. Analog inputs (Tracer® ZN520)

Description	Terminals	Function	Range
Zone	TB3-1	Space temperature input	5°F to 122°F
Ground	TB3-2	Analog ground	NA
Set	TB3-3	Setpoint input	40°F to 115°F
Fan	B3-4	Fan switch input	4821 to 4919 W (off)
			2297 to 2342 W (auto)
			10593 to 10807 W (low)
			13177 to 13443 W (medium)
			15137 to 16463 W (high)
Ground	TB3-6	Analog ground	NA
Analog input 1	J3-1	Entering water temperature	-40°F to 212°F
	J3-2	Analog ground	NA
Analog input 2	J3-3	Discharge air temperature	-40°F to 212°F
	J3-4	Analog ground	NA
Analog input 3	J3-5	Fresh air temp/generic temp	-40°F to 212°F
	J3-6	Analog ground	NA
Analog input 4	J3-7	Universal input	0% to 100%
		Generic 4–20mA	0% to 100%
		Humidity	0 to 2000 ppm
		CO_2	
	J3-8	Analog ground	NA
Ground	J3-9	Analog ground	NA

Notes:
1. The zone sensor, entering water temperature sensor, discharge air sensor, and the outside air temperature sensor are 10KΩ thermistors.
2. Zone sensor: Wall-mounted sensors include a thermistor soldered to the sensor's circuit board. Unit mounted sensors include a return air sensor in the units return air stream.
3. Changeover units include an entering water temperature sensor.

Zone Sensor (Tracer® ZN520)

The Tracer® ZN520 controller accepts the following zone sensor module inputs:

- Space temperature measurement (10kΩ thermistor)
- Local setpoint (either internal or external on the zone sensor module)
- Fan switch
- Timed override (On) and Cancel timed override
- Communication jack

Space Temperature Measurement (Tracer® ZN520)

Trane zone sensors use a 10kΩ thermistor to measure the space temperature. Typically, zone sensors are wall-mounted in the room and include a space temperature thermistor. As an option, the zone sensor can be unit-mounted with a separate space temperature thermistor located in the unit's return air stream. If both a hard-wired and communicated space temperature value exist, the controller ignores the hard-wired space temperature input and uses the communicated value.

External Setpoint Adjustment (Tracer® ZN520)

Zone sensors with an external setpoint adjustment (1kΩ) provide the Tracer® ZN520 controller with a local setpoint (50°F to 85°F or 10°C to 29.4°C). The external setpoint is exposed on the zone sensor's front cover.

When the hard-wired setpoint adjustment is used to determine the setpoints, all unit setpoints are calculated based on the hard-wired setpoint value, the configured setpoints, and the active mode of the controller. The hard-wired setpoint is used with the controller's occupancy mode (occupied, occupied standby, or unoccupied), the heating or cooling mode, the temperature deadband values, and the heating and cooling setpoints (high and low limits) to determine the controller's active setpoint.

When a building automation system or other controller communicates a setpoint to the controller, the controller ignores the hard-wired setpoint input and uses the communicated value. The exception is the unoccupied mode, when the controller always uses the stored default unoccupied setpoints. After the controller completes all setpoint calculations, based on the requested setpoint, the occupancy mode, the heating and cooling mode, and other factors, the calculated setpoint is validated against the following setpoint limits:

- Heating setpoint high limit
- Heating setpoint low limit
- Cooling setpoint high limit
- Cooling setpoint low limit

These setpoint limits only apply to the occupied and occupied standby heating and cooling setpoints. These setpoint limits do not apply to the unoccupied heating and cooling setpoints stored in the controller's configuration.

When the controller is in unoccupied mode, it always uses the stored unoccupied heating and cooling setpoints.The unit can also be configured to enable or disable the local (hard-wired) setpoint. This parameter provides additional flexibility to allow you to apply communicated, hard-wired, or default setpoints without making physical changes to the unit.

Similar to hard-wired setpoints, the effective setpoint value for a communicated setpoint is determined based on the stored default setpoints (which determines the occupied and occupied standby temperature deadbands) and the controller's occupancy mode.

Fan Switch (Tracer® ZN520)

The zone sensor fan switch provides the controller with an occupied (and occupied standby) fan request signal (Off, Low, Medium, High, Auto). If the fan control request is communicated to the controller, the controller ignores the hard-wired fan switch input and uses the communicated value. The zone sensor fan switch input can be enabled or disabled through configuration using the Rover service tool. If the zone sensor switch is disabled, the controller resorts to its stored configuration default fan speeds for

heating and cooling, unless the controller receives a communicated fan input.

When the fan switch is in the off position, the controller does not control any unit capacity. The unit remains powered and all outputs drive to the closed position. Upon a loss of signal on the fan speed input, the controller reports a diagnostic and reverts to using the default fan speed.

On/Cancel Buttons (Tracer® ZN520)

Momentarily pressing the on button during unoccupied mode places the controller in occupied bypass mode for 120 minutes. You can adjust the number of minutes in the unit controller configuration using Rover service tool. The controller remains in occupied bypass mode until the override time expires or until you press the Cancel button.

Communication Jack (Tracer® ZN520)

Use the RJ-11 communication as the connection point from Rover service tool to the communication link—when the communication jack is wired to the communication link at the controller. By accessing the communication jack via Rover, you can access any controller on the link.

Communications (Tracer® ZN520)

Tracer® ZN520 controller communicates via Trane's LonTalk protocol. Typically, a communication link is applied between unit controllers and a building automation system. Communication also is possible via Rover, Trane's service tool. Peer-to-peer communication across controllers is possible even when a building automation system is not present. You do not need to observe polarity for LonTalk communication links.

The controller provides six 0.25-inch quick-connect terminals for the LonTalk communication link connections, as follows:

- Two terminals for communication to the board
- Two terminals for communication from the board to the next unit (daisy chain)
- Two terminals for a connection from the zone sensor back to the controller

Table 27. Zone sensor wiring connections (Tracer® ZN520)

TB1	Description
1	Space temperature / timed override detection
2	Common
3	Setpoint
4	Fan mode
5	Communications
6	Communications

UC400 Sequence of Operation

The UC400 controller will operate to maintain the space temperature setpoint. This section provides information about sequence of operations.

Power-up Sequence (UC400)

When 24 Vac power is initially applied to the UC400 controller, the following sequence occurs:

1. The Power Marquee LED turns on as red, then flashes green, and then turns a solid green.
2. All outputs are controlled **OFF** and all modulating valves and dampers close.
3. The controller reads all input local values to determine initial values.
4. The random start timer begins.
5. The random start timer expires.
6. Normal operation begins, assuming there are no generated diagnostics. If any points are in fault or alarm mode, the Power Marquee LED flashes red.

Important: *Flashing red does not indicate that the UC400 controller will fail to operate. Instead, the point(s) that are in fault or alarm mode should be checked to determine if the status of the point(s) is acceptable to allow equipment operation.*

Random Start (UC400)

Random start is intended to prevent all units in a building from energizing at the same time. The random start timer delays the fan and any heating or cooling start-up from 5 to 30 seconds.

Occupancy Modes (UC400)

Occupancy modes can be controlled in the following ways:

- The state of the local (hard wired) occupancy binary input BI1.
- A timed override request from a Trane zone sensor.
- A communicated signal from either a Tracer® SC or BAS.

A communicated request, from either a Tracer® SC or BAS, takes precedence over local requests. If a communicated occupancy request has been established, and is no longer present, the controller reverts to the default (occupied) occupancy mode after 15 minutes (if no hard wired occupancy request exists). The UC400 controller has the following occupancy modes:

- Occupied
- Unoccupied
- Occupied standby
- Occupied bypass

Occupied Mode (UC400)

In Occupied Mode, the UC400 controller maintains the space temperature based on the occupied space temperature setpoint ± occupied offset. The controller uses the occupied mode as a default mode when other forms of occupancy request are not present and the fan runs continuously. The outdoor air damper, if present, will close when the fan is OFF. The temperature setpoints can be local (hard wired), communicated, or stored default values (configurable using the Tracer® TU service tool).

Unoccupied Mode (UC400)

In unoccupied mode, the UC400 controller attempts to maintain the space temperature based on the unoccupied heating or cooling setpoint. The fan will cycle between high speed and **OFF**. In addition, the outdoor air damper remains closed, unless economizing. The controller always uses the stored default setpoint values (configurable using the Tracer® TU service tool), regardless of the presence of a hard wired or communicated setpoint value.

Occupied Standby Mode (UC400)

The UC400 controller is placed in occupied standby mode *only* when a communicated occupied request is combined with an unoccupied request from occupancy binary input BI1. In occupied standby mode, the controller maintains the space temperature based on the occupied standby heating or cooling setpoints. Because the occupied standby setpoints have a typical temperature spread of 2°F (1.1°C) in either direction, and the outdoor air damper is closed, occupied standby mode reduces the demand for heating and cooling the space. The fan will run as configured (continuously) for occupied mode. The controller always uses the stored default setpoint values (configurable using the

® TU service tool), regardless of hard wired or communicated setpoint values. In addition, the outdoor air damper uses the economizer occupied standby minimum position setpoint to reduce the ventilation rate.

Occupied Bypass Mode (UC400)

The UC400 controller is placed in occupied bypass mode when the controller is operating in the unoccupied mode and when either the timed override **ON** button on the Trane zone sensor is pressed or the controller receives a communicated occupied bypass signal from a BAS. In occupied bypass mode, the controller maintains the space temperature based on the occupied heating or cooling setpoints. The fan will run as configured (continuous or cycling). The outdoor air damper closes when the fan is **OFF**. The controller remains in occupied bypass mode until either the **CANCEL** button is pressed on the Trane zone sensor or the occupied bypass time (configurable using the Tracer® TU service tool) expires. The temperature setpoints can configured as local (hard wired), communicated, or stored default values using the Tracer® TU service tool.

Timed Override Control (UC400)

If the UC400 controller has a timed override option (**ON/CANCEL** buttons), pushing the **ON** button initiates a timed override on request. A timed override on request changes the occupancy mode from unoccupied mode to occupied bypass mode. In occupied bypass mode, the controller controls the space temperature based on the occupied heating or cooling setpoints. The occupied bypass time, which resides in the UC400 controller and defines the duration of the override, is configurable from 0 to 240 minutes (default value of 120 minutes). When the occupied bypass time expires, the unit transitions from occupied bypass mode to unoccupied mode. Pushing the **CANCEL** button cancels the timed override request. In addition, it will end the timed override before the occupied bypass time has expired and transition the unit from occupied bypass mode to unoccupied mode.

If the controller is in any mode other than unoccupied mode when the **ON** button is pressed, the controller still starts the occupied bypass timer without changing to occupied bypass mode. If the controller is placed in unoccupied mode before the occupied bypass timer expires, the controller is placed into occupied bypass mode and remains in this mode until either the **CANCEL** button is pressed on the Trane zone sensor or the occupied bypass time expires.

Zone Temperature Control (UC400)

The UC400 controller has three methods of zone temperature control:

- **Cascade zone control**—used in the occupied, occupied bypass, and occupied standby modes. It maintains zone temperature by controlling the discharge air temperature to control the zone temperature. The controller uses the difference between the measured zone temperature and the active zone temperature setpoint to produce a discharge air temperature setpoint. The controller compares the discharge air temperature setpoint with the discharge air temperature and calculates a unit heating/cooling capacity accordingly (refer to the illustration below). The end devices (outdoor air damper, valves, and so on) operate in sequence based on the unit heating/cooling capacity (0–100 percent).

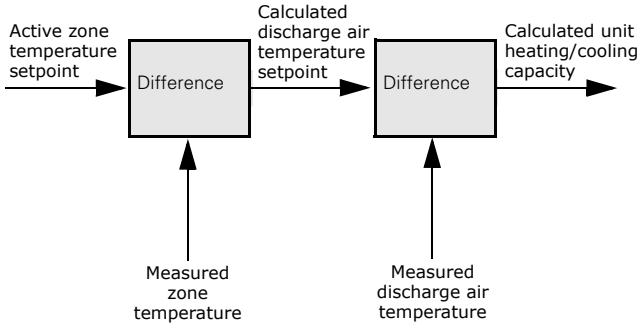

If the discharge air temperature falls below the discharge air temperature low limit setpoint,

(configurable using the Tracer® TU service tool), and the cooling capacity is at a minimum, the available heating capacity is used to raise the discharge air temperature to the low limit (refer to the following section, (Discharge Air Tempering).

- **Simplified zone control**— if discharge air temperature failure occurs, then simplified zone controls runs. In the unoccupied mode, the controller maintains the zone temperature by calculating the required heating or cooling capacity (0–100%) according to the measured zone temperature and the active zone temperature setpoint. The active zone temperature setpoint is determined by the current operating modes, which include occupancy and heat/cool modes.
- **Discharge air temperature control**— is the backup mode that runs *only* if there is not valid zone temperature. In this mode, the active space temperature setpoint is used as the discharge air temperature setpoint.

  Important: *This is not a normal operating mode. The source of the invalid zone temperature needs to be corrected to restore normal operation.*

Discharge Air Tempering (UC400)

If the UC400 controller is in cooling mode, cascade zone control initiates a discharge air tempering function when:

- The discharge air temperature falls below the discharge air temperature low limit setpoint (configurable using the Tracer® TU service tool)
- All cooling capacity is at a minimum. The discharge air tempering function allows the controller to provide heating capacity (if available) to raise the discharge air temperature to the discharge air temperature low limit setpoint.
- The cold outdoor air is brought in through the outdoor air damper and when the damper is at (high) minimum position. This causes the discharge air temperature to fall below the discharge air temperature low limit setpoint.

Heating or Cooling Mode (UC400)

The heating or cooling mode can be determined in one of two ways:

- By a communicated signal from a BAS or a peer controller
- Automatically, as determined by the UC400 controller

A communicated heating signal permits the controller to *only* heat and a communicated cooling signal permits the controller to *only* cool. A communicated auto signal allows the controller to automatically change from heating to cooling and vice versa.

In heating or cooling mode, the controller maintains the zone temperature based on the active heating setpoint and the active cooling setpoint, respectively. The active heating and cooling setpoints are determined by the occupancy mode of the controller.

For 2-pipe and 4-pipe changeover units, normal heat/cool operation *will not* begin until the ability to conduct the desired heating or cooling operation is verified. This is done using the entering water temperature sampling function, for which a valid entering water temperature is required. When neither a hard wired nor a communicated entering water temperature value is present on changeover units, the controller operates in *only* heating mode and assumes the coil water is hot. The sampling function is not used.

The entering water temperature sampling function is used *only* for changeover applications and for information and troubleshooting. It *does not* affect the operation of the controller.

Entering Water Temperature Sampling Function (UC400)

The entering water temperature sampling function is used with 2-pipe and 4-pipe changeover units and requires a valid entering water temperature value. If the entering water temperature value is less than 5°F (2.8°C) above a valid zone temperature value for hydronic heating, and greater than 5°F (2.8°C) below a valid zone temperature value for hydronic cooling, the sampling function is enabled. When the sampling function is enabled, the UC400 controller opens the main hydronic valve to allow the water temperature to stabilize. After 3 minutes, the controller again compares the entering water temperature value to the zone temperature value to determine if the desired heating or cooling function can be accomplished. If the entering water temperature value remains out of range to accomplish the desired heating/cooling function, the controller closes the main hydronic valve and waits 60 minutes to attempt another sampling. If the entering water temperature value falls within the required range, it resumes normal heating/cooling operation and disables the sampling function.

Fan Operation (UC400)

The UC400 controller supports 1-, 2-, 3-speed fans and variable-speed fans. The fan always operates continuously while either heating or cooling during occupied, occupied standby, and occupied bypass operation. During unoccupied operation, the fan cycles between **OFF** and **HIGH**, regardless of the fan configuration. When running in **AUTO** mode, the fan operates differently based on the mode and the type of fan.

For 1-, 2-, and 3-speed fans, each time the fan is enabled, the fan begins operation and runs on high speed for a period of time (0.5 seconds for fan coils and 3 seconds for unit ventilators and blower coils) before changing to another speed. Initially running on high speed provides

adequate torque to start the fan motor from the **OFF** position.

Note: *In occupied mode, the UC400 controller requires continuous fan operation because of cascade zone control. In unoccupied mode, the fan cycles.*

Manual Fan Speed Control (UC400)

Regardless of the fan type, the fan runs continuously at the desired fan speed during occupied, occupied standby, and occupied bypass operation as follows:

- When the controller receives a communicated fan speed signal (**HIGH**, **MEDIUM**, **LOW**)
- The associated fan speed switch is set to a specific fan speed
- The Supply Fan Speed Request point is overridden

During unoccupied operation, the fan cycles between **OFF** and **HIGH**, regardless of the communicated fan speed signal or fan speed switch setting (unless either of these is **OFF**, which in turn, will control the fan **OFF**).

The fan turns OFF when:

- The controller receives a communicated **OFF** signal
- The fan speed switch is set to **OFF**
- Specific diagnostics are generated
- The default fan speed is set to **OFF** and the fan is operating in the **AUTO** mode

Note: *The supply fan speed source can be configured for BAS, local, or default value control using the Tracer® TU service tool.*

AUTO Fan Operation; 1-, 2-, 3-speed Fans (UC400)

When the controller receives a communicated auto signal (or the associated fan speed switch is set to **AUTO** with no communicated value present), the fan operates in the **AUTO** mode. In **AUTO** mode, the fan operates according to the fan default (configurable using the Tracer® TU service tool). The fan speed has multiple speed configurations (default is **AUTO**) or set to **OFF** for both heating and cooling operation. When configured as **AUTO** (and with multiple speeds available), the fan changes based on the required capacity calculated by the control algorithm.

AUTO Fan Operation; ECM Energy Efficient Mode (UC400)

When the controller is configured for *Energy Efficient Mode,* by means of the *Fan Operating Mode Request MV* point, the controller and daughter board will minimize energy use by running the fan at the lowest possible speed while maintaining space temperature. The controller will fully utilize valves, economizer, or electric heat which increases fan speed to meet space temperature (unless the fan has been manually controlled.

AUTO Fan Operation; ECM Acoustical Mode (UC400)

When the controller is configured for *Acoustical Mode*, by means of the *Fan Operating Mode Request MV* point, the controller and daughter board will minimize acoustical nuisance by balancing changes in fan speed and total fan noise. The controller will fully **OPEN** cooling and heating valves before increasing fan speed to meet space temperature (unless the fan has been manually controlled. If multiple stages of electric heat exist the controller will use a single minimum air flow for each stage.

Exhaust Control (UC400)

Exhaust control is achieved by a single-speed exhaust fan and controlled by binary output 2 (BO2). Exhaust control, if not present, can be enabled by selecting **Yes** under the *Exhaust Fan Selection* on the Tracer® TU Configuration page under the *Equipment Options* group.

Note: *Exhaust fan configuration cannot be selected with 3-speed fan operation.*

Important: *If exhaust control is added to an existing configuration, all other configuration options should be verified to match the correct equipment options.Temperature and flow setpoints will revert to default values.*

The exhaust function is coordinated with the supply fan and outdoor/return air dampers as follows:

- The exhaust fan energizes when the fan is running and when the outdoor air damper position is greater than or equal to the exhaust fan enable position (or the outside air damper position at which the exhaust fan turns **ON**).
- The exhaust fan turns **OFF** when the fan either turns **OFF** or the outdoor air damper closes to 10 percent below the exhaust fan enable position.
- If the exhaust fan/damper enable setpoint is less than 10 percent, the exhaust output is energized if the outdoor air damper position is at the setpoint and de-energized at 0.

Valve Operation (UC400)

The UC400 controller supports one or two modulating or two-position valves, depending on the application (refer to the following table. The controller opens and closes the appropriate valve(s) to maintain the active zone temperature setpoint at the heating setpoint in heating mode or the cooling setpoint in cooling mode (refer to "Cascade Zone Control," p. 78).

Modulating Valve Operation (UC400)

The UC400 controller supports tri-state modulating valve control. Two binary outputs control each valve: one to drive the valve open and one to drive the valve closed. The stroke time for each valve is configurable using the

Tracer® TU service tool. The controller supports the following:

- Heating
- Cooling
- Heat/cool changeover with a single valve and coil for 2-pipe applications
- Cooling or heat, cool changeover with the main valve, and coil
- Only heating with the auxiliary valve and coil for 4-pipe applications

The controller moves the modulating valve to the desired positions based on heating or cooling requirements.

Modulating Valve Calibration (UC400)

Modulating valve calibration is automatic. During normal controller operation, the UC400 overdrives the actuator (135 percent of the stroke time) whenever there is a request for a position of 0 percent or 100 percent. At either power-up, after a power outage, or when the occupancy status changes to unoccupied, the controller first drives all modulating valves (and dampers) to the closed position. The controller calibrates to the fully **CLOSED** position by over driving the actuator (135 percent of the stroke time). Thereafter, the controller resumes normal operation.

Two-position Valve Operation (UC400)

The UC400 controller supports two-position valves with a single binary output for each valve. Controllers used for 2-pipe applications support heating, cooling, or heat/cool changeover with a single valve/coil. A controller used for 4-pipe applications supports cooling or heat/cool changeover with a main valve/coil and heating *only* with an auxiliary valve/coil.

Modulating Outdoor/Return Air Damper (UC400)

The UC400 controller operates the modulating outdoor/return air dampers based on the following:

- Occupancy mode
- Outdoor air temperature (communicated or hard wired sensor)
- Zone temperature
- Setpoint
- Discharge air temperature
- Discharge air temperature setpoint

The minimum position for an outdoor air damper is configurable using the Tracer® TU service tool for both occupied mode and occupied standby mode and for low-speed fan operation. A controller can receive a BAS-communicated outdoor air damper minimum position.

A BAS-communicated minimum position setpoint has priority over all locally configured setpoints. When a communicated minimum position setpoint is not present, the controller uses the configured minimum position for low fan speed whenever the fan is running at low speed, regardless of the occupancy state. See below for more information about how the controller determines the position of the modulating outdoor air damper.

Table 28. Modulating outdoor air damper position setpoint determination (UC400)

Occupancy	BAS-communicated Setpoint	Fan speed	Active Minimum Setpoint
Unoccupied	Any value	Any value	0% (closed).
• Occupied • Occupied bypass • Occupied standby	Valid	Any value	BAS-communicated.
• Occupied • Occupied bypass • Occupied standby	Invalid	Low	Occupied low fan minimum.
• Occupied • Occupied bypass	Invalid	Medium/high	Occupied minimum.
Occupied standby	Invalid	Medium/high	Occupied standby minimum.

Table 29. Relationship between outdoor temperature sensors and damper position (UC400)

	Modulating outdoor air damper position		
Outdoor Air Temperature	Occupied or Occupied Bypass	Occupied Standby	Unoccupied
No or invalid outdoor air temperature.	Open to occupied minimum position.	Open to occupied standby minimum position.	Closed.
Failed outdoor air sensor.	Open to occupied minimum position.	Open to occupied standby minimum position.	Closed.
Outdoor air temperature present and economizing possible (Refer to section, "Economizing (Free Cooling) (UC400)," p. 81).	Economizing; damper controlled between occupied minimum position and 100%.	Economizing; damper controlled between occupied standby minimum position and 100%.	Open and economizing during unit operation; otherwise closed.
Outdoor air temperature present and economizing not possible (Refer to section, "Economizing (Free Cooling) (UC400)," p. 81).	Open to occupied minimum position.	Open to occupied standby minimum position.	Closed.

Economizing (Free Cooling) (UC400)

Cooling with outdoor air (during the times when the temperature is low enough to allow) is referred to as economizing (free cooling). The UC400 controller and applications with modulating outside air damper, support economizing. The modulating outdoor air damper provides the first source of cooling for the controller.

The controller initiates economizing if the outdoor air temperature is below the economizer enable point (configurable using the Tracer® TU service tool). If economizing is initiated, the controller modulates the outdoor air damper (between the active minimum damper position and 100 percent) to control the amount of

outdoor air cooling capacity. When the outdoor air temperature rises 5°F (2.8°C) above the economizer enable point, the controller disables economizing and moves the outdoor air damper back to its predetermined minimum position, based on the current occupancy mode or communicated minimum outdoor air damper position. If an outdoor air temperature value is not present, economizing is disabled.

Two-position Control Of A Modulating Outdoor Air Damper (UC400)

The UC400 controller supports two-position outdoor air damper actuators. However, a modulating outdoor/return air damper actuator can be used for two-position control. Two-position control can be achieved by not providing an outdoor air temperature (neither hard wired nor communicated) to the controller, and by setting the damper minimum position (using the Tracer® TU service tool) to the desired value, typically 100 percent.

Electric Heat Operation (UC400)

The UC400 controller supports both SCR (modulating) and staged electric heat (1- or 2-stages). SCR heat is *only* a field-installed option. In a unit configured with staged electric heat, the electric heating circuit(s) are cycled **ON** and **OFF** appropriately to maintain the desired space temperature at the active heating setpoint. In a unit configured with SCR (modulating) electric heat, the UC400 will send a 0 to 10 Volt DC signal to adjust SCR capacity in order to maintain the desired space temperature.

In both staged and modulating electric heat applications, the simultaneous use of electric and hydronic heat is not supported and the UC400 will operate electric heat *only* when hot water *is not* available (for example, in a changeover unit). In addition, the UC400 will run the supply fan for 30 seconds after electric heat is turned **OFF** in order to dissipate heat from the unit

Note: *This delay* does not *apply to steam or hydronic heating.*

Factory-configured electric heat units have built-in mechanical protections to prevent dangerously high discharge air temperatures.

Dehumidification Operation (UC400)

The UC400 controller supports space dehumidification when:

- Mechanical (DX or hydronic) cooling is available
- The heating capacity is located in the reheat position
- The space relative humidity is valid

The space relative humidity can be a BAS-communicated value or come directly from a wired relative humidity sensor. The controller begins to dehumidify the space when the space humidity exceeds the humidity setpoint. The controller continues to dehumidify until the sensed humidity falls below the setpoint minus the relative humidity offset.

Peer-to-peer Communication (UC400)

Peer-to-peer communication is accomplished by means of custom TGP2 programming in the Tracer® SC system controller or via hard wiring *only* between controllers.

Unit Protection Strategies (UC400)

The following unit protection strategies are initiated when specific conditions exist in order to protect the unit or building from damage:

- Smart reset
- Low coil temperature protection
- Condensate overflow
- Fan status
- Fan off delay
- Filter maintenance timer
- Freeze avoidance
- Freeze protection (discharge air temperature low limit)

Smart Reset (UC400)

The UC400 controller will automatically restart a unit that is locked out as a result of a **Low Coil Temp Detection** (BI3) diagnostic. Referred to as *smart reset*, this automatic restart will occur 30 minutes after the diagnostic occurs. If the unit is successfully restarted, the diagnostic is cleared. If the unit undergoes another **Low Coil Temp Detection** diagnostic within a 24-hour period, the unit will be locked out until it is manually reset.

Note: *Freeze protection will also perform a smart reset.*

Low Coil Temperature Protection (UC400)

For more information refer to BAS-SVX48*-EN.

Condensate Overflow (UC400)

For more information refer to BAS-SVX48*-EN.

Fan Status (UC400)

In 1-, 2- and 3-speed fans, the status is based on the statuses of the supply fan output multistate and analog points dedicated to fan control. The fan status is reported as **HIGH**, **MEDIUM**, **LOW**, and as a percentage, whenever the fan is running. The fan status is reported as **OFF** whenever the fan is not running. In addition, a fan status switch can be connected to binary input 5 (BI5) to monitor the status of the fan for belt-driven or direct-driven units (except Trane Macon factory ECM fan motor units). The fan status switch provides feedback to the controller as follows:

- If the fan is not operating when the controller has the fan controlled to **ON**, the controller generates a *Low Airflow-Supply Fan Failure* diagnostic.
- If the UC400 controller energizes the fan output for 1 minute, and the fan status switch indicates no fan operation, the controller performs a unit shutdown

and generates a *Low Airflow-Supply Fan Failure* diagnostic.

- If the fan has been operating normally for one minute, but the fan status switch indicates no fan operation, the same diagnostic is generated.

This manual diagnostic discontinues unit operation until the diagnostic has been cleared from the controller. If a diagnostic reset is sent to the controller, and the fan condition still exists, the controller attempts to run the fan for 1 minute before generating another diagnostic and performing a unit shutdown. A diagnostic reset can be sent to the controller from the Tracer® TU *Alarms* page or by temporarily overriding the *Reset Diagnostic Request* on the Tracer® TU *Binary Status* page.

Note: *In the ECM fan application, the ECM engine board will monitor the status of the fan. In case of a failure, the engine board will disable the motor immediately, and the low airflow diagnostic is sent.*

Fan Off Delay (UC400)

After heating has been controlled **OFF**, the UC400 controller keeps the fan energized for an additional 30 seconds in order to remove residual heat from the heating source.

Filter Maintenance Timer (UC400)

The filter maintenance timer tracks the amount of time (in hours) that the fan is enabled. The Filter Runtime Hours Setpoint (configurable using the Tracer® TU service tool) is used to set the amount of time until maintenance (typically, a filter change) is required. The timer can be enabled/disabled from the **Supply Fan** group on the **Setup Parameters** page in Tracer® TU.

The UC400 controller compares the fan run time to filter runtime hours setpoint. Once the setpoint is reached, the controller generates a **Filter Change Required** diagnostic. When the diagnostic is cleared, the controller resets the filter maintenance timer to zero, and the timer begins accumulating fan run time again. The diagnostics can be cleared and the filter timer reset by temporarily overriding the **Filter Timer Reset Request** on the **Binary Status** page or by using the reset button on the **Alarms** page in Tracer® TU.

Freeze Avoidance (UC400)

Freeze avoidance is used for low ambient temperature protection. It is initiated *only* when the fan is **OFF**. The UC400 controller enters the freeze avoidance mode when the outdoor air temperature is below the freeze avoidance setpoint (configurable using the Tracer® TU service tool). The controller disables freeze avoidance when the outdoor air temperature rises 3°F (1.7°C) above the freeze avoidance setpoint.

The following occurs when the controller is in freeze avoidance mode:

- Valves are driven open to allow water to flow through the coil
- Fan is **OFF**
- Economizing is disabled
- The outdoor/return air damper is closed
- DX cooling is **OFF**
- Electric heat stages are **OFF**

Freeze Protection (Discharge Air Temperature Low Limit) (UC400)

The UC400 controller monitors the discharge air temperature with a 10 kΩ thermistor wired to AI4. The freeze protection operation is initiated whenever the discharge air temperature falls below the discharge air temperature low limit. The discharge air temperature low limit is configurable using the Tracer® TU service tool. During freeze protection, the controller increases the heating capacity or decreases the cooling capacity in order to raise the discharge air temperature above the low limit. If the discharge air temperature remains below the low limit for 3 minutes, the controller generates a **Discharge Air Temp Limit** diagnostic.

Note: *Freeze protection will also perform a smart reset.*

Maintenance

⚠WARNING

Hazardous Service Procedures!

Failure to follow all precautions in this manual and on the tags, stickers, and labels could result in death or serious injury.

Technicians, in order to protect themselves from potential electrical, mechanical, and chemical hazards, MUST follow precautions in this manual and on the tags, stickers, and labels, as well as the following instructions: Unless specified otherwise, disconnect all electrical power including remote disconnect and discharge all energy storing devices such as capacitors before servicing. Follow proper lockout/tagout procedures to ensure the power can not be inadvertently energized.When necessary to work with live electrical components, have a qualified licensed electrician or other individual who has been trained in handling live electrical components perform these tasks.

Service Access

To access the unit for water balancing, motor access or other start-up and maintenance functions, use one of the following methods:

1. Remove the entire front panel and put a blockoff over the air chamber in the front.
2. Remove the return air grille by releasing the mounting screws.
3. If there is no shelving or other obstructions, removing the end panel may allow more access.

Periodic Maintenance

The following maintenance suggestions apply to all types of unit ventilators, chilled water, hot water, split systems and electric. Additional information for controls not supplied by The Trane Company should be obtained from the controls manufacturer.

Split system unit ventilators include a condensing unit and the instructions provided with the condensing unit will apply to the entire refrigerant system.

Filters

The air filters supplied with Trane unit ventilators are specially designed for high lint content. Depending upon room conditions, these filters will normally need to be replaced every four to eight weeks. To assure proper unit operation, inspect the filters monthly and clean or replace as required.

Overloaded filters will reduce unit air handling capacity, which may result in insufficient heating during the morning warm-up period and loss of natural cooling capacity during mild weather.

NOTICE:

Equipment Damage!

Do not operate unit without filters or grille in place. Operating the unit without filters or grille in place could cause equipment failure.

To replace the filter, lower the back access panel and lift the filter out of its channel and out of the unit.

Figure 54.

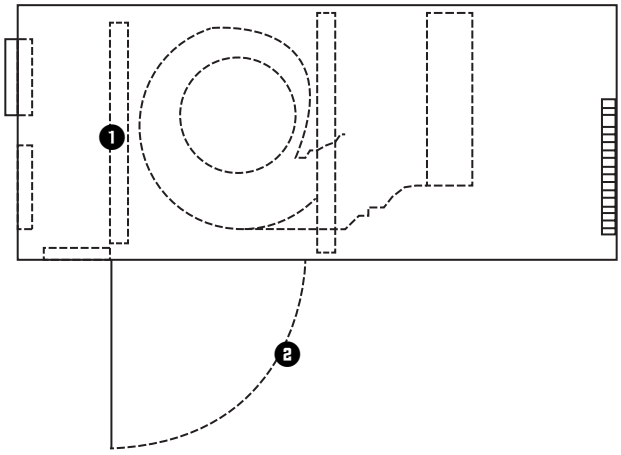

1. Filter
2. Hinged back access panel

Removal of the Drain Pan

The unit ventilator's drain pan is removable for periodic cleaning or for easy access for maintenance/drainage issues. Refer to the following figure and the following steps for removing the drain pan:

1. Turn off power to the unit and remove the front panel by turning camlocks.
2. Disconnect the drain line from the drain spout.
3. Remove two screws from each side of the drain pan (four total) as shown.

   Note: *The drain pan will drop straight down upon screw removal.*

Figure 55. Removal of screws holding drain pan in place.

Note: *The drain pan is installed at an angle to allow drainage. For each end of the drain pan, remember the position (top or bottom slot) from which the fastener was removed.*

4. When reinstalling, use the same steps in reverse order, remembering the pitch of the drain pan.

Removal of the Fanboard and Coil Cleaning

The unit ventilator fan board can be removed for service to the blower motor and fan wheels. The fan board must also be removed for easier access to the unit coils for cleaning and maintenance. Utilize the following steps for proper removal of the fanboard.

1. Turn off power to the unit and remove the front panel.
2. Remove the front air grille and filter from the unit.
3. Pick wires out of the cable chase and tie them out of the way (see Figure 56).

   Note: *The cable chase is part of the fanboard assembly.*

Figure 56. Tie wires from the cable chase out of the way

4. Disconnect motor wires.
5. Loosen the four bolts (two on each side of the fanboard; see Figure 57).

NOTICE:

Equipment Damage!

Support the fanboard before removing the bolts that support it to prevent it from falling out of the unit, which could cause equipment damage.

Figure 57. Loosen the two bolts (four total) at either end of the fanboard

6. *For units with face and bypass options only:* Before removing the fanboard, the drain pan must be removed (Figure 55, p. 85). After the drain pan has been removed, proceed to Step 7.
7. Remove the bolts and fanboard.
8. When reinstalling, use the same steps in reverse order.

Lubrication: Fan Shaft

One fan shaft bearing is mounted on the right end of the fan board. This sleeve-type bearing has an inner surface of sintered bronze which allows oil to flow from the built-in

reservoir to the bearing surface without the use of grooves or holes in the inner bearing surface. Do not alter the inner bearing in any way.

Fill the bearing reservoir every six months with a No. 10 SAE, non- detergent, automotive type oil.

Motor

The fan motor is an electronically commutated motor.

To replace the fan motor, complete the following steps:

1. Turn off power to the unit and remove the front cover.
2. Complete steps for return air grille and filter removal.
3. Complete steps for removal of drain pan if face and bypass option is installed.
4. Complete steps for removal of fan board.
5. Disconnect the motor ground wire.
6. Using a 7/16-in. Allen wrench, loosen the coupling on the fan shaft.
7. Loosen the screw on the motor clamp until it allow the motor to be lifted off the base.
8. Lift the motor and pull forward until fan shaft separates from the motor.
9. Attach new motor to fan shaft and reverse steps to complete installation.

Preventive Maintenance

A comprehensive preventive maintenance program should be established for a unit ventilator system. The following are several key elements:

- Inspect the filters monthly.
- Inspect and clean the drain pans every three months.
- Check the coils for “dirt” accumulation every three to six months.
- Clean the coils at least once each year.
- Inspect the unit ventilator insulation every three months; thoroughly clean as needed.

Diagnostics and Troubleshooting

Troubleshooting Checklist

⚠WARNING

Hazardous Service Procedures!

Failure to follow all precautions in this manual and on the tags, stickers, and labels could result in death or serious injury.

Technicians, in order to protect themselves from potential electrical, mechanical, and chemical hazards, MUST follow precautions in this manual and on the tags, stickers, and labels, as well as the following instructions: Unless specified otherwise, disconnect all electrical power including remote disconnect and discharge all energy storing devices such as capacitors before servicing. Follow proper lockout/tagout procedures to ensure the power can not be inadvertently energized.When necessary to work with live electrical components, have a qualified licensed electrician or other individual who has been trained in handling live electrical components perform these tasks.

If operating difficulties are encountered, refer to the following table for probable causes and corrective measures. If suggested corrective measures have been taken, and the trouble still persists, contact the control supplier or the local Trane Sales Office.

Problem	Heating	Cooling	Cause	Correction
Room too warm (outside air temperature is below 35°F)	X		Main power off.	Check fuses.
	X		Room sensor is not properly set.	Reset room sensor temperature.
	X		Room sensor is providing a false reading due to walls being cold from the night temperature setting.	Start the warm-up cycle earlier in the morning to provide appropriate time-frame to increase room temperature prior to space occupation.
	X		Sensor is mounted on a block wall that is leaking cold air into the room through the mounting holes.	Relocate sensor.
	X		Face and bypass damper, or coil valve is malfunctioning.	Replace malfunctioning component, or contact the control's contractor, or if Trane controls, see CNT-SVX04*-EN for more information concerning Tracer® controls.
Room too warm (outside air temperature is above 35°F)	X		Room sensor is not properly set.	Reset room sensor temperature.
	X		Face and bypass damper or coil control valve is malfunctioning.	Replace malfunctioning component, or contact the control's contractor, or if Trane controls, see CNT-SVX04*-EN for more information concerning Tracer® controls.
	X		OA damper is in the closed position.	Ensure OA damper is in the open position.
	X		Clogged filter.	Replace filter.
Room too warm (outside air temperature is above 35°F) Unit utilizes Wall Fin auxiliary radiation:	X		Control valve is malfunctioning.	Check flow of hot water through the control valve.
	X		Boiler.	Check the boiler reset schedule to determine if the loop temperature can be decreased.
	X		Steam.	Check the operation of the control valves.
	X		Outside air temperature is above 60°F to 65°F.	The economics of the unit ventilator selection dictate that, in most cases, the unit will be sized to provide adequate natural (ventilation) cooling without outside temperatures up to 60°F to 65°F. Above this point, a changeover should be made to the mechanical cooling cycle.

Problem	Heating	Cooling	Cause	Correction
Room too cool		X	Room sensor is not properly set.	Reset room sensor temperature.
		X	Clogged filter.	Replace filter.
		X	Face and bypass damper, or coil valve is malfunctioning.	Replace malfunctioning component, or contact the control's contractor, or if Trane controls, see CNT-SVX04*-EN for more information concerning Tracer® controls.
		X	OA damper is in the open position.	Ensure OA damper is in the closed or minimum outside air position.
		X	Boiler pressure or temperature design requirements not being met.	On hot water and steam type units, check the boiler pressure or temperature to ensure that the requirements are being met.
Room too cool Unit utilizes Wall Fin auxiliary radiation:		X	Radiation controls malfunctioning.	Check the operation of the wall fin controls.
Room too hot		X	Room sensor is not properly set.	Reset room sensor temperature.
		X	Clogged filter.	Replace filter.
		X	Face and bypass damper, or coil valve is malfunctioning.	Replace malfunctioning component, or contact the control's contractor, or if Trane controls, see CNT-SVX04*-EN for more information concerning Tracer® controls.
		X	OA damper is in the open position.	Ensure OA damper is in the minimum outside air position.
		X	Chiller temperature design requirements not being met.	Check the temperature of the water leaving the chiller to ensure that it meets design requirements.
Motor		X	If the motor fails to start, and other motors on the same circuit are functioning.	Check the unit switch to ensure it is in the ON position.
		X	If the motor fails to start, and other motors on the same circuit are functioning.	Check for loose switch or motor connection.
Unit 265 and 460 volt unit	X	X	If the unit fails to start.	Check fuse in right-hand end pocket inside the transformer mounting box. Replace with Trane fuse X1311057435 (ABC type 6A 250V).

Testing (Thermostat)

Once the thermostat is configured, it should be thoroughly tested.

Note: *If using pipe sensors, verify pipe sensor is within range to output. Check pipe temperature by pressing the UP and DOWN buttons simultaneously.*

Heat Test (for systems with heat)

1. Press SYS button until heat mode is displayed.
2. Adjust the set temperature so it is 5 degrees above the room temperature.
3. Heat should come on within a few seconds.
4. Adjust the set temperature 2 degrees below the room temperature and the heat should turn off. There may be a fan delay on your system.

Cool Test (For systems with cooling)

1. Press SYS (left) button until cool mode is displayed.
2. Adjust set temperature so it is 5 degrees below room temperature.
3. Cooling should come on within a few seconds.
4. Adjust the set temperature 2 degrees above the room temperature and the cool should turn off. There may be a fan delay on your system.

Fan Test (System off)

Press FAN button to toggle between Fan Off, Fan Hi, Fan Med or Fan Low.

Output Testing and Diagnostics (Tracer® ZN520)

Table 30. Tracer® ZN520 diagnostics

Diagnostic	Fan	Other Outputs[a]
Condensate overflow	Off	Valves Closed, Fresh air damper Closed, Electric heat Off, Baseboard heat Off
Low temperature detection	Off	Valves Open, Fresh air damper Closed, Electric heat Off, Baseboard heat Off
Low air flow - fan failure	Off	Valves Closed, Fresh air damper Closed, Electric heat Off, Baseboard heat Off
Space temperature failure	Off	Valves Closed, Fresh air damper Closed, Electric heat Off, Baseboard heat Off
Entering water temp failure	On	Valves Enabled[b], Fresh air damper Enabled[b], Electric heat Enabled[b], Baseboard heat Off
Discharge air temp low limit	Off	Valves Open, Fresh air damper Closed, Electric heat Off, Baseboard heat Off

Table 30. Tracer® ZN520 diagnostics (continued)

Diagnostic	Fan	Other Outputs[a]
Discharge air temp failure	Off	Valves Closed, Fresh air damper Closed, Electric heat Off, Baseboard heat Off
Fresh air temp failure	On	Valves Enabled, Fresh air damper Minimum position[c], Electric heat Enabled, Baseboard heat Enabled
Relative humidity failure	On	Valves Enabled, Fresh air damper Enabled, Electric heat Enabled, Baseboard heat Enabled
Generic 4–20mA failure	On	Valves Enabled, Fresh air damper Enabled, Electric heat Enabled, Baseboard heat Enabled
CO_2 Input failure	On	Valves Enabled, Fresh air damper Enabled, Electric heat Enabled, Baseboard heat Enabled
Maintenance required	On	Valves Enabled, Fresh air damper Enabled, Electric heat Enabled, Baseboard heat Enabled
Local fan mode failure	On	Valves Enabled, Fresh air damper Enabled, Electric heat Enabled, Baseboard heat Enabled
Local setpoint failure	On	Valves Enabled, Fresh air damper Enabled, Electric heat Enabled, Baseboard heat Enabled
Invalid unit configuration	Off	Valves Disabled, Fresh air damper Disabled, Electric heat Disabled, Baseboard heat Disabled
Normal—power up	On	Valves Enabled, Fresh air damper Enabled, Electric heat Enabled

(a) The generic binary output (TB4-1, TB4-2) state is unaffected by all unit diagnostics.
(b) When the entering water temperature is required but not present, the Tracer® ZN520 controller generates a diagnostic to indicate the sensor loss condition. The controller automatically clears the diagnostic once a valid entering water temperature value is present (non-latching diagnostic). When the entering water temperature sensor fails, the controller prohibits all hydronic cooling operation, but allows the delivery of heat when heating is required. In the Cool mode, all cooling is locked-out, but normal fan and outdoor air damper operation is permitted.
(c) When the outdoor air temperature sensor has failed or is not present, the Tracer® ZN520 controller generates a diagnostic to indicate the sensor loss condition. The controller automatically clears the diagnostic once a valid outdoor air temperature value is present (non-latching diagnostic). When the outdoor air temperature sensor fails or is not present, the controller prohibits economizer operation.

Translating Multiple Diagnostics (Tracer® ZN520)

The controller senses and records each diagnostic independently of other diagnostics. It is possible to have multiple diagnostics present simultaneously. The diagnostics are reported in the order they occur.

Possible diagnostics include:

- Low temperature detection
- Condensate overflow
- Low air flow—fan status
- Discharge air temp limit
- Space temperature failure[1]
- Entering water temp failure[1]
- Discharge air temp failure[1]
- Outdoor air temp failure[1]
- Local setpoint failure[1]
- Local fan mode failure[1]
- CO_2 sensor failure[1]
- Generic AIP failure[1]
- Humidity input failure[1]
- Defrosting compressor lockout[1]
- Maintenance required
- Invalid unit configuration
- Generic temperature failure
- Discharge air low limit

Resetting Diagnostics (Tracer® ZN520)

There are a number of ways in which diagnostics are reset:

1. Automatic reset by the controller
2. By initiating a manual output test at the controller
3. By cycling power to the controller
4. Through Rover, Trane's service tool
5. Tracer® ZN520: by using any other communicating device ab le to access the controller's diagnostic reset input.
6. Tracer® ZN520: by cycling the fan switch from Off to any speed setting.

Automatic Reset by the Controller (Tracer® ZN520)

The controller includes an automatic diagnostic reset function that attempts to automatically restore the unit when a low temperature diagnostic occurs.

Note: *The controller implements the automatic diagnostic reset function only once every 24 hours. For the controller to increment the 24 hour timer, you must maintain power to the controller. Cycling power resets all timers and counters.*

After the controller detects the first special diagnostic, the unit waits 30 minutes before invoking the automatic diagnostic reset function. The automatic diagnostic reset function clears the special diagnostic and attempts to restore the controller to normal operation. The controller resumes normal operation until another diagnostic occurs.

Note: *The automatic diagnostic reset function does not operate during the manual output test sequence.*

If a special diagnostic occurs within 24 hours after an automatic diagnostic reset, the controller must be manually reset. Other possible methods of resetting diagnostics are described in the sections that follow.

Manual Output Test (Tracer® ZN520)

To verify proper end device operation, press the controller's Test button. This exercise will verify all outputs in a predefined sequence, the first of which will attempt to reset the controller diagnostics if any are present.

Cycling Power to the Controller (Tracer® ZN520)

After removing and reapplying the 24 Vac power from the board, the unit cycles through a power-up sequence. By

[1] Non-latching diagnostics automatically reset when the input is present and valid.

default, the controller attempts to reset all diagnostics present at power-up.

Table 31. Tracer® ZN520 controller diagnostics

Diagnostic	Latching	Fan	Valves	Elec Heat	Damper
Auxiliary temp. failure	No	Enabled	No action	No action	No action
Condensate overflow detection	Yes	Off	Closed	Off	Closed
Entering water temp. failure	No	Enabled	Enabled	Enabled	Enabled
Fan mode failure	No	Enabled	Enabled	Enabled	Enabled
Invalid unit configuration failure	Yes	Disabled	Disabled	Disabled	Disabled
Low temp. detection	Yes	Off	Open	Off	Closed
Maintenance required	Yes	Enabled	No action	No action	No action
Setpoint	No	Enabled	No action	No action	No action
Zone temp. failure	No	Off	Closed	Off	Closed

Notes:
1. Priority Level: Diagnostics are listed in order from highest to lowest priority. The controller senses and records each diagnostic independently of other diagnostics. It is possible to have multiple diagnostics present simultaneously. The diagnostics affect unit operation according to priority level.
2. Latching: A latching diagnostic requires a manual reset of the controller; while a non-latching diagnostic automatically resets when the input is present and valid.
3. Enabled: End device is allowed to run if there is a call for it to run.
4. Disabled: End device is not allowed to run even if there is a call for it to run.
5. No Action: The diagnostic has no affect on the end device.

Using Trane's Service Tool, Rover (Tracer® ZN520)

Rover, Trane's service tool, can reset diagnostics present in the controller and troubleshoot the unit. For more information, refer to the Trane publication EMTX-SVX01*-EN.

Diagnostic Reset (Tracer® ZN520)

Any device that can communicate the network variable nviRequest (enumeration "clear_alarm") can reset diagnostics in the Tracer® ZN520 controller.The controller also attempts to reset diagnostics whenever power is cycled.

Cycling the Fan Switch (Tracer® ZN520)

Cycle the fan speed switch from Off to any speed and the controller resets all diagnostics. Diagnostics may recur immediately if the problem still exists.

Table 32. Fan outputs do not energize (Tracer® ZN520)

Probable Cause	Explanation
Random start	After power-up, the controller always observes a random start that varies observed between 0 and 25 seconds. The controller remains off until the random start time expires.
Power-up control wait	When power-up control wait is enabled (non-zero time), the controller remains off until one of two conditions occurs: 1. The controller exits power-up control wait once it receives communicated information. 2. The controller exits power-up control wait once the power-up control wait time expires.
Cycling fan operation	When the fan mode switch is in the auto position, the unit fan cycles off when there is no call for heating or cooling. The heating/cooling sources cycle on or off periodically with the unit fan to match the capacity according to pulse-width-modulation (PWM) logic.
Unoccupied operation	The fan cycles with capacity when the unit is in unoccupied mode. This occurs even if the unit is in continuous fan operation. While unoccupied, the fan cycles on or off with heating/cooling to provide varying amounts of heating or cooling to the space to match the to pulse-width-modulation (PWM) logic.
Fan mode off	When using the local fan mode switch to determine the fan operation, the off position controls the unit fan to off.
Requested mode: off	It is possible to communicate the operating mode (such as off, heat, and cool) to the controller. When "off" is communicated to the controller, the unit controls the fan to off. The unit is not capable of heating or cooling when the controller is in this mode.
Diagnostic present	A specific list of diagnostics effects fan operation. For more information, see the Diagnostic section.
No power to the controller	If the controller does not have power, the unit fan will not operate. For the controller to operate normally, it must have an input voltage of 24 Vac. When the green LED is off continuously, the controller does not have sufficient power or the controller has failed.
Manual output test	The controller includes a manual output test sequence to verify binary output operation and the associated wiring. However, based on the current step in the test sequence, the unit fan may not be powered on.
Unit wiring	The wiring between the controller outputs and the fan relays and contacts must be present and correct for normal fan operation. Refer to the typical unit wiring diagrams.

Table 33. Valves stay closed (Tracer® ZN520)

Probable Cause	Explanation
Normal operation	The controller opens and closes the valves to meet the unit capacity requirements.
Requested mode: off	It is possible to communicate the operating mode (such as off, heat, and cool) to the controller. When off is communicated to the controller, the unit controls the fan to off. The unit is not capable of heating or cooling when the controller is in this mode.
Valve override	The controller can communicate a valve override request. This request affects the valve operation.
Manual output test	The controller includes a manual output test sequence to verify analog and binary output operation and the associated wiring. However, based on the current step in the test sequence, the valves may not be open.
Diagnostic present	A specific list of diagnostics affects valve operation. For more information, see the Diagnostic section.
Sampling logic	The controller includes entering water temperature sampling logic that automatically invokes during 2-pipe or 4-pipe changeover. It determines when the entering water temperature is either too cool or too hot for the desired heating or cooling mode.
Unit configuration	The controller must be properly configured based on the actual installed end devices and application. When the unit configuration does not match the actual end device, the valves may not work correctly.
No power to the controller	If the controller does not have power, the valves do not operate. For the controller to operate normally, it must have an input voltage of 24 Vac. When the green LED is off continuously, the controller does not have sufficient power, or the controller has failed.
Unit wiring	The wiring between the controller outputs and the valve(s) must be present and correct for normal valve operation. Refer to the typical unit wiring diagrams.

Table 34. Valves stay open (Tracer® ZN520)

Probable Cause	Explanation
Normal operation	The controller opens and closes the valves to meet the unit capacity requirements.
Valve override	The controller can communicate a valve override request to affect the valve operation.
Manual output test	The controller includes a manual output test sequence that verifies analog and binary output operation and the associated wiring. However, based on the current step in the test sequence, the valves may be open.
Diagnostic present	A specific list of diagnostics affects valve operation. For more information, see the Diagnostic section.
Sampling logic	The controller includes entering water temperature sampling logic that automatically invokes during 2-pipe or 4-pipe changeover to determine if the entering water temperature is correct for the unit operating mode.
Unit configuration	The controller must be properly configured based on the actual installed end devices and application. When the unit configuration does not match the actual end device, the valves may not work correctly.
Unit wiring	The wiring between the controller outputs and the valve(s) must be present and correct for normal valve operation. Refer to the typical unit wiring diagrams.

Table 35. Electric heat not operating (Tracer® ZN520)

Probable Cause	Explanation
Normal operation	The controller cycles electric heat on and off to meet the unit capacity requirements.
Requested mode: off	It is possible to communicate the operating mode (such as off, heat, cool) to the controller. When off is communicated to the controller, the units shuts off the electric heat.
Communicated disable	Numerous communicated requests may disable electric heat, including an auxiliary heat enable input and the heat/cool mode input. Depending on the state of the communicated request, the unit may disable electric heat.
Manual output test	The controller includes a manual output test sequence that verifies analog and binary output operation and associated output wiring. However, based on the current step in the test sequence, the electric heat may not be on.
Diagnostic present	A specific list of diagnostics affects electric heat operation. For more information, see the Diagnostic section.
Unit configuration	The controller must be properly configured based on the actual installed end devices and application. When the unit configuration does not match the actual end device, the electric heat may not work properly.
No power to the controller	If the controller does not have power, electric heat does not operate. For the controller to operate normally, a 24 Vac input voltage must be applied. When the green LED is off continuously, the controller does not have sufficient power or has failed.
Unit wiring	The wiring between the controller outputs and the electric heat contacts must be present and correct for normal electric heat operation. Refer to the typical unit wiring diagrams.
ECM Motor / Control Board Failure	ECM controls include sophisticated fan proving / interlock circuitry that will disable electric heat if one or more motors are not performing normally
Hot water is present on a changeover unit	On units with changeover coil and electric heat, simultaneous operation of hydronic heat and electric heat is not allowed.

Table 36. Fresh air damper stays open (Tracer® ZN520)

Probable Cause	Explanation
Normal operation	The controller opens and closes the fresh air damper based on the controller's occupancy mode and fan status. Normally, the fresh air damper is open during occupied mode when the fan is running and closed during unoccupied mode.
Manual output test	The controller includes a manual output test sequence that verifies analog and binary output operation and associated output wiring. However, based on the current step in the test sequence, the fresh air damper may not be open.
Unit configuration	The controller must be properly configured based on the actual installed end devices and application. When the unit configuration does not match the actual end device, the damper may not work correctly.zcf vv
Unit wiring	The wiring between the controller outputs and the fresh air damper must be present and correct for normal damper operation. Refer to the typical unit wiring diagrams.

Table 37. Fresh air damper stays closed (Tracer® ZN520)

Probable Cause	Explanation
Normal operation	The controller opens and closes the fresh air damper based on the controller's occupancy mode and fan status. Normally, the fresh air damper is open during occupied mode when the fan is running and closed during unoccupied mode.
Warmup and cooldown	The controller includes both a warmup and cooldown sequence to keep the fresh air damper closed during the transition from unoccupied to occupied. This is an attempt to bring the space under control as quickly as possible.
Requested mode: off	It is possible to communicate the operating mode (such as off, heat, cool) to the controller. When off is communicated to the controller, the unit closes the fresh air damper.
Manual output test	The controller includes a manual output test sequence that verifies analog and binary output operation and associated output wiring. However, based on the current step in the test sequence, the fresh air damper may not be open.
Diagnostic present	A specific list of diagnostics effects fresh air damper operation. For more information, see the Diagnostic section.
Unit configuration	The controller must be properly configured based on the actual installed end devices and application. When the unit configuration does not match the actual end device, the damper may not work correctly.
No power to the controller	If the controller does not have power, the fresh air damper does not operate. For the controller to operate normally, a 24 Vac input voltage must be applied. When the green LED is off continuously, the controller does not have sufficient power or has failed.
Unit wiring	The wiring between the controller outputs and the fresh air damper must be present and correct for normal damper operation. Refer to the typical unit wiring diagrams.

Output Testing and Diagnostics (UC400)

This section provides information about the following:

- Output testing
- Diagnostics

Note: *For detailed description of LED activities and troubleshooting tips, refer to the section.*

Output Testing (UC400)

Important: Do not *directly overwrite the outputs. Output testing can be accomplished by overriding the following analog and multistate value points in the desired state or position:*

- *Cool valve request*
- *DX cool request*
- *Economizer request*
- *Electric heat request*
- *Heat valve request*
- *Supply fan speed request*

The points can be overridden on the Tracer® TU analog or multistate pages by clicking on the **Override** icon in the control column. A higher priority (lower number) must be chosen over the current control setting.

Diagnostics (UC400)

Diagnostics are informational messages that indicate the operational status of the UC400 controller. In response to most diagnostics, the controller attempts to protect the equipment by enabling/disabling, or by opening/closing specific outputs. Other diagnostics provide information about the status of the controller, but have no effect on outputs. Diagnostics are reported in the order in which they occur. Multiple diagnostics can be present simultaneously. Diagnostic messages are viewed using the Tracer® TU service tool or through a BAS.

Note: *Tracer® TU will report only active diagnostics.*

Diagnostics Types (UC400)

Diagnostics are categorized according to the type of clearing method each uses and the type of information each provides.

The diagnostic types are:

- Manual (latching) diagnostics
- Automatic (non-latching) diagnostics
- Smart reset diagnostics
- Informational diagnostics

Note: *Clearing diagnostics refers to deleting diagnostics from the software; it does not affect the problem that generated the message.*

Manual (Latching) Diagnostics (UC400). Manual diagnostics (also referred to as latching) cause the unit to shut down. Manual diagnostics can be cleared from the UC400 controller in one of the following ways:

- By using the Tracer® TU service tool to reset latching diagnostics on the **Alarms Status** tab or by temporarily overriding the **Reset Diagnostic Request** (bv/2) on the **Binary Status** tab.
- Through a building automation system.
- By cycling power to the controller. When the 24Vac power to the controller is cycled **OFF** and then **ON** again, a power-up sequence occurs.

Automatic (Non-latching) Diagnostics (UC400).

Automatic diagnostics clear automatically when the problem that generated the diagnostic is solved.

Smart Reset Diagnostics (UC400). Smart Reset Diagnostics are latching diagnostics that will auto-recover if the condition is corrected. After the controller detects the first smart reset diagnostic, the unit waits 30 minutes before initiating the smart reset function. If another diagnostic of this type occurs again within 24 hours after an automatic clearing, clear the diagnostic manually by using any of the ways listed under the preceding section, "Manual (Latching) Diagnostics (UC400)."

Informational Diagnostics (UC400). Informational diagnostics provide information about the status of the controller. They *do not* affect machine operation, but can be cleared from the controller using the BAS or Tracer® SC.

Table of Diagnostics (UC400)

The following table lists each diagnostic that can be generated by the UC400 controller, the diagnostic effect on outputs *(consequences)*, and diagnostic type.

Note: *The generic binary output is unaffected by diagnostics.*

Table 38. UC4000 diagnostics

Diagnostic	Probable Cause	Consequences	Diagnostic Type
Filter change required	Fan run hours exceed the time set to indicate filter change.	• Fan **Unaffected** • Valves **Unaffected** • Electric heat **Unaffected**	Informational
Condensate overflow	The drain pan is full of water.	• Fan **OFF** • Valves **Closed** • Outdoor air damper **Closed** • DX/electric heat **OFF**	Manual
Low coil temp detection	The leaving fluid temperature may be close to freezing.	• Fan **OFF** • Valves **Open** • Outdoor air damper **Closed** • DX/electric heat **OFF**	Smart reset/ Manual
Low airflow supply fan failure	The fan drive belt, contactor, or motor has failed.	• Fan **OFF** • Valves **Closed** • Outdoor air damper **Closed** • DX/electric heat **OFF**	Manual

Table 38. UC4000 diagnostics (continued)

Diagnostic	Probable Cause	Consequences	Diagnostic Type
Space temperature failure(a)	Invalid or missing value for zone temperature.	• Discharge air temperature control runs • Unit shuts **OFF** if both space temperature and discharge air temperature fail	Automatic
Entering water temp failure	Invalid or missing value for zone temperature.	• Fan **Unaffected** (enabled) • Valves **Unaffected** • Outdoor air damper **Unaffected** • DX/electric heat **Unaffected**	Automatic
Discharge air temp low limit	Discharge air temperature has fallen below the Discharge Air Temperature Low Limit.	• Fan **OFF** • Valves **Open** • Outdoor air damper **Closed** • DX/electric heat **OFF**	Smart reset/ manual
Discharge air temp failure(a)	Invalid or missing value for discharge air temperature.	• Simplified zone control algorithm runs • Unit shuts OFF if zone temperature fails	Automatic
Outdoor air temp failure	Invalid or missing value for outdoor air temperature.	• Fan **Unaffected** • Valved **Unaffected** • Outdoor air damper **Minimum Position** • DX cooling/electric heat **unaffected**	Automatic
Humidity input failure	Invalid or missing value for relative humidity.	• Fan **Unaffected** • Valves **Unaffected** • Outdoor air damper **Unaffected** • DX cooling/electric heat **Unaffected**	Automatic
CO_2 sensor failure	Invalid or missing value for CO_2.	• Fan **Unaffected** • Valves **Unaffected** • Outdoor air damper **Unaffected** • DX cooling/electric heat **Unaffected**	Informational
Generic AIP failure	Invalid or missing value for generic analog input.	• Fan **Unaffected** • Valves **Unaffected** • Outdoor air damper **Unaffected** • DX cooling/electric heat **Unaffected**	Informational
Local fan mode failure	Invalid or missing fan-speed switch *(reverts to default fan speed)*.	• Fan **Unaffected** • Valves **Unaffected** • Outdoor air damper **Unaffected** • DX cooling/electric heat **Unaffected**	Automatic
Local setpoint failure	Invalid or missing value for zone temperature setpoint *(reverts to default setpoint)*.	• Fan **Unaffected** • Valves **Unaffected** • Outdoor air damper **Unaffected** • DX cooling/electric heat **Unaffected**	Automatic

(a) For detailed information about zone temperature control methods, refer to "Zone Temperature Control (UC400)," p. 78.

Troubleshooting (Wireless Controls)

Locations of LEDs, Test button, Test Symbols, and Error Codes

The receiver for all models has four LEDs: LED1, LED2, LED3, and LED5.

Note: *To view LEDs on a flush mount receiver on a fan-coil unit, the front panel of the unit must be removed.*

Figure 58. LED locations on the receiver

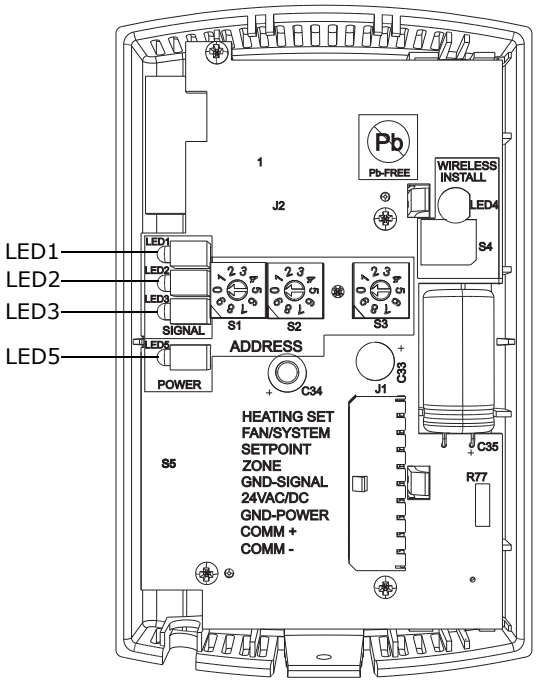

The sensor for model WZS have four LEDs: LED1, LED2, LED3, and LED5. The sensor for model WDS has test symbols and error codes that appear on the display. All three sensor models have a Test button.

Figure 59. LED, Test button, and symbol locations on the sensor

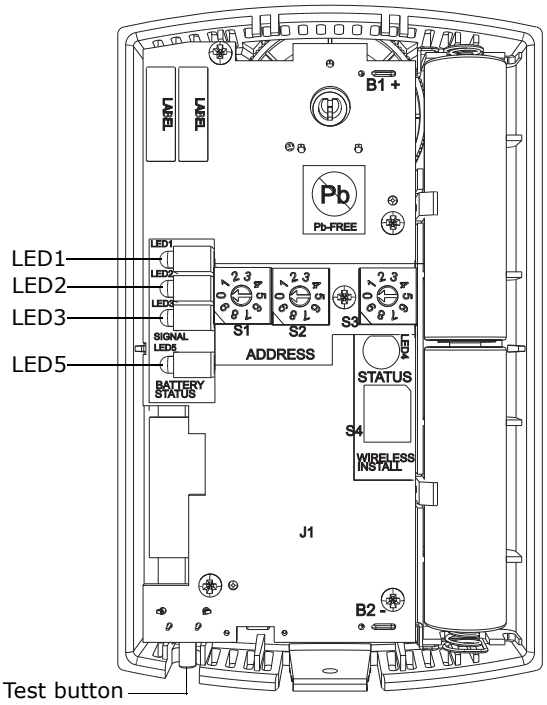

WZS sensor

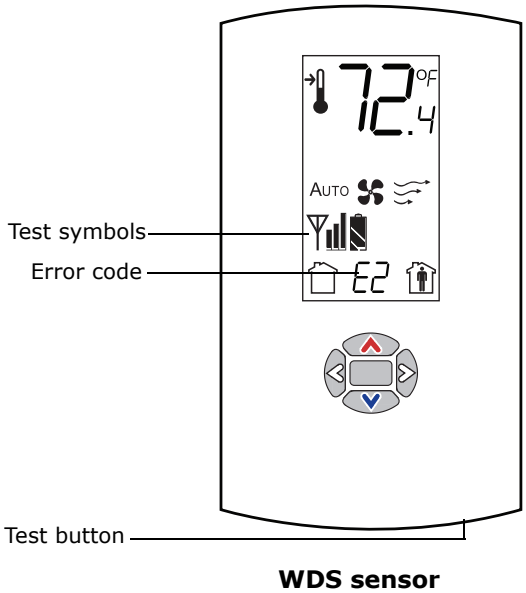

WDS sensor

Diagnostics (Wireless Controls)

LED1, LED2, and LED3, located on the sensor of model WZS respond to diagnostics by exhibiting specific blinking patterns. View their response by pressing the Test button.

Error codes appear on the display of the model WDS sensor when diagnostics occur.

Table 39. Diagnostics on the sensor (wireless controls)

LED state when Test button is pressed (WZS sensor)	Error code (WDS sensor display)	Indicates...
N/A	E0, E5, E7	Sensor failure • Replace sensor
LED1: Off LED2: Off LED3[(a)]: 1-blink pattern repeated 3 times	E1	Disassociated • Sensor is not associated with a receiver.
LED1: Off LED2: Off LED3(a): 2-blink pattern repeated 3 times	E2	Address set to 000 • Address not set to between 001–999.
LED1: Off LED2: Off LED3(a): 3-blink pattern repeated 3 times	E3	Software error • Replace sensor
LED1: Off LED2: Off LED3(a): 4-blink pattern repeated 3 times	E4	Input voltage too high • No RF transmission is permitted with an input battery voltage greater than 3.9 V.

(a) Blink pattern is On for 1/4 s, Off for 1/4 s, with 2 s Off between repetitions.

LED1, LED2, and LED3, located on the receiver of all models, respond to diagnostics by exhibiting specific blinking patterns. They respond independently of any user action.

Table 40. Diagnostics on the receiver (wireless controls)

LED state	Indicates...
LED1: Off LED2: Off LED3: 1-blink pattern repeated continuously[(a)]	Disassociated • Receiver is not associated, waiting for a sensor. • Receiver lost communication with sensor. • Receiver has no devices on its wireless personal area network. • Association with a device has been manually removed.
LED1: Off LED2: Off LED3: 2-blink pattern repeated continuously(a)	Address set to 000 • Address not set to between 001–999.
LED1: Off LED2: Off LED3: 3-blink pattern repeated continuously(a)	Not configured • Receiver configuration properties not properly set (defective receiver).

(a) Blink pattern is On for 1/4 s, Off for 1/4 s, with 2 s Off between repetitions.

Testing Signal Strength (Wireless Controls)

To initiate a signal strength test, push the Test button on the sensor (see location of Test button).

- **Models WZS**: LED1, LED2, and LED3 respond by indicating signal strength. You can view them on the sensor and the receiver.
- **Model WDS**: Test symbols on the sensor display indicate signal strength. LED1, LED2, and LED3, on the receiver, respond by indicating signal strength.

Table 41. Observing signal strength on the sensor (wireless controls)

User action	LED state (WZS sensors)	Symbol (WDS sensor display)	Indicates...
None	LED1: Off LED2: Off LED3: Off	No Test symbols appear	Normal state • No Test button press.
Press Test button on the sensor	LED1: Off LED2: Off LED3: Off		Associated; no communication with receiver • Associated, but no signal from the receiver after pressing Test button.
	LED1: On LED2: On LED3: On Displays for 5 seconds, then constantly Off		Excellent signal strength • Good signal margin for reliable communication.
	LED1: Off LED2: On LED3: On Displays for 5 seconds, then constantly Off		Satisfactory signal strength • Adequate signal strength for reliable communication. • Moving sensor or receiver may improve signal strength. • Increased channel switching may reduce battery life.
	LED1: Off LED2: Off LED3: On Displays for 5 seconds, then constantly Off		Poor signal strength • Unreliable communication. • Strongly recommend moving the sensor or receiver to a better location.

Table 42. Observing signal strength on the receiver (wireless controls)

User action	LED state (receiver, all models)	Indicates...
None	LED1: Off LED2: Off LED3: Off	Normal state • No Test button press.
Press Test button on the sensor	LED1: On LED2: On LED3: On Displays for 5 seconds, then constantly Off	Excellent signal strength • Good signal margin for reliable communication.
	LED1: Off LED2: On LED3: On Displays for 5 seconds, then constantly Off	Satisfactory signal strength • Adequate signal strength for reliable communication. • Moving sensor or receiver may improve signal strength. • Increased channel switching may reduce battery life.
	LED1: Off LED2: Off LED3: On Displays for 5 seconds, then constantly Off	Poor signal strength • Unreliable communication • Strongly recommend moving the sensor or receiver to a better location

Testing Battery Status (Wireless Controls)

Initiate a battery status test as follows:

- On model WZS, push the Test button on the sensor. LED5 on the sensor responds by indicating the level of battery strength, as shown in the following table.

- On model WDS, push the Test button on the sensor. In response, a battery test symbol appears on the display. The symbol shown indicates battery life expectancy.

Table 43. Battery status: LED5 on model WZS sensors (wireless controls)

User action	LED state (WZS)	Indicates...
Press Test button	Solid green for 5 seconds	Battery is adequate for proper operation.
	Solid red for 5 seconds	25% battery life left. Batteries should be replaced.
	No light	Batteries life expired or not installed properly, or sensor is defective.
None	Blinking red: 1-blink pattern[a] repeated 5 times. Cycle repeats every 15 minutes.	Approximately 14 days of operation remain before the battery is too weak to power the sensor.

(a) Blink pattern is On for 1/4 s, Off for 3/4 s, with 2 s Off between repetitions.

Table 44. Battery status: Battery symbol on model WDS sensor display (wireless controls)

User action	Battery test symbol	Indicates...
Press Test button		Full battery power.
		50% battery life left.
		25% battery life left. Replace batteries. Flashing symbol indicates that approximately 14 days of operation remain before the battery is too weak to power the sensor.

24 V Power Status Indicator (Wireless Controls

LED5 on the receiver of all model lights and stays constantly On when 24 V power is normal.

Using the Wireless Sensor System to Check Signal Strength on a Site (Wireless Controls)

Follow these steps to check the signal strength on a site:

1. Power up a receiver with a 24 V transformer (user supplied)
2. Associate the sensor to a receiver of the same model intended for the job
3. Place the receiver at the desired location
4. Place or hold the sensor at the desired location
5. Press the Test button (S5) on the sensor and observe the signal strength as indicated by LED1, LED2, and LED3 on model WZS, and on the display on model WDS.

For more information on interpreting the LEDs and the display symbols that indicate signal strength, see "Testing Signal Strength (Wireless Controls)".

Replacing Sensor Batteries (Wireless Controls)

Sensor battery type, length of life, and installation are addressed in this section.

Battery Type (Wireless Controls)

NOTICE

Battery Damage!

Failure to follow instructions below could result in battery leakage and, in some cases, cause the safety release vent to open.

Do NOT attempt to recharge the batteries. The batteries are manufactured in a ready-to-use state and are NOT designed for recharging.

NOTICE

Sensor Damage!

Do not hook up the sensor to a power supply as it could result in sensor damage.

Use two non-rechargeable 1.5 V lithium AA batteries in the sensor. To maintain UL rating, use only UL-listed lithium batteries. The sensor ships with Energizer® L91 batteries already installed. Replacement batteries are available at Trane Service Parts Centers (p/n X13770035010) or other local suppliers.

Battery Life (Wireless Controls)

Battery life is five years under normal conditions. If the sensor is not used for an extended period of time, do one of the following:

- Set the sensor address to 000 to place the sensor into a low-power hibernation mode.
- Remove the batteries

Notes:

- *If lithium batteries are temporarily unavailable, alkaline batteries can be used. However, alkaline battery life is very short by comparison.*
- *The battery life for a model WDS may decrease with extended LCD display activity.*

Battery Installation (Wireless Controls)

⚠WARNING

Risk of Injury with Batteries!

Failure to follow handling instructions below could result in severe injury.

• Do NOT install batteries backwards.

• Do NOT disassemble, charge, or expose batteries to water, fire, or high temperature.

• Keep batteries away from children. If swallowed, contact your local poison control center immediately.

⚠WARNING

Prevent Injury!

Keep away from small children. If swallowed, contact your local poison control center immediately.

6. Observe the polarity indicators that are molded into the cover.
7. Install two batteries (of the type specified in "Battery Type (Wireless Controls) in the battery-holding slot that is molded into the sensor cover.

The sensor has been designed to prevent damage if the batteries are installed backwards, to reduce the potential for injury.

Manual Association (Wireless Controls)

Before attempting manual or automatic association, the receiver must indicate readiness to associate (one blink pattern of LED3 on receiver). Refer to "Observing the Receiver for Readiness to Associate.

At any time, the manual association method can be used to associate the receiver with the sensor. If an association was previously established between a receiver and a sensor and needs to be re-established, the manual association process may be used. If an association has not yet been established, the automatic association process is recommended (see "Associating the Sensor to the Receiver).

8. Using a small screwdriver, set the three rotary address switches (locations S1, S2, S3) on the receiver to an address between 001 and 999.

Notes:

- An address can be changed without powering down the receiver or sensor.
- An address can be changed at any time after initial association has been established.

9. Set the three rotary address switches (locations S1, S2, S3) on the sensor to the same address as the receiver.
10. Record the address and location of the receiver and sensor pair.
- After verifying that the receiver and sensor are powered up, press the Test button on the sensor to establish that the signal strength ("Testing Signal Strength (Wireless Controls)) and the battery life ("Testing Battery Status (Wireless Controls)) are adequate for proper functioning.

Disassociation (Wireless Controls)

The receiver disassociates from the sensor (by removing all stored association information), conducts a channel scan, and restarts itself, if any of the following are true:

- The receiver address is changed from its current setting (001–999)
- The receiver receives a disassociation notification from its associated sensor
- The receiver does not receive a communication from its associated sensor within 50 minutes.
- The sensor and receiver are associated and communicating at the time the sensor is set to 000 and the Test button is pressed.

Note: *A disassociated sensor will transit an association request every 10 minutes.*

Sensor/Receiver Compatibility (Wireless Controls)

Version 1.5 (p/n X13790854 and X13790855) and higher receivers are compatible with all sensors models and support all functions. Receivers released prior to version 1.5 are compatible with only model WZS.

Replacing a Failed Sensor or Receiver (Wireless Controls)

Note: *Receivers ship installed on the unit. To remove the receiver, press in the retention tabs on the underside of the receiver enclosure and push upward.*

To replace a failed sensor or receiver:

11. Confirm that the device is disassociated (see Table 39 and Table 40).
12. Set the rotary address switch of the new device to match the address of the remaining sensor or receiver.

    Note: *There is no need to remove power from the remaining device.*

13. Apply power to the new device. Association between the new and the remaining devices will automatically occur.

Note: *When replacing a WDS sensor, the receiver (version 1.5 or higher) will automatically configure the sensor to match the last stored configuration, if the sensor has not been placed into configuration mode and the factory default configuration is still valid. If the sensor configuration does not match the desired system features, it can be manually configured (see "Manual Association (Wireless Controls)).*

Servicing and Testing (Wireless Controls)

If the wireless sensor system is not working as expected, use the tools and procedure described in this section.

Servicing and Testing Tools (Wireless Controls)

No special tools or software are necessary to service and test the wireless sensor system. Test the system by using:

- The LEDs on the receiver, LEDs on the model WZS sensor, and the display on the model WDS sensor
- The Test button on the sensor
- The address test mode on the receiver
- A common volt-ohm meter

Procedure for Testing the Wireless Sensor System (Wireless Controls)

If the wireless sensor system is not working as expected:

1. Observe LED5 on the receiver. LED5 is On solid green whenever the receiver is powered.
2. Verify that the receiver is properly grounded. Both the GND-SIGNAL (black) wire and the GND-POWER (yellow) wire must be grounded.
3. Press the Test button on the sensor.
   - Model WZS: LED5 should turn On solid green, indicating proper battery strength. LED1, LED2, and LED3 will indicate signal strength.

     Note: *When checking signal strength, both LED1 and LED3 on the receiver and sensor illuminate in unison if the sensor and receiver are associated. Use this feature to confirm association.*
   - Model WDS: Battery life ("Testing Battery Status (Wireless Controls)) and signal strength ("Testing Signal Strength (Wireless Controls)) are indicated on the display.

Procedure for Testing the Receiver (Wireless Controls)

If the receiver is not working as expected:

1. Verify that the receiver is powered.
2. Set the receiver address to 000 to force the zone temperature output and zone temperature setpoint output to their default mode values (see "Output Values—Failure and Default Modes of Operation (Wireless Controls)).
3. Measure the receiver output resistance (see "Measuring Output Resistance (Wireless Controls)).
4. When the test is complete, reset the receiver address to its previous setting.
5. Press the Test button on the sensor to force re-association.
6. Confirm association and communication by noting LED1, LED2, and LED3 as described in "Testing Signal Strength (Wireless Controls).

Forcing a Sensor to Transmit (Wireless Controls)

To force a wireless sensor to transmit during servicing, press the Test button on the sensor.

Output Power Level (Wireless Controls)

The maximum output power level of a wireless sensor set is controlled by software and restricted by channel of operation and agency requirements per country or region. The sensor has a default maximum power level of 10 mW, but the receiver determines the ultimate output power level of the sensor.

Output Values—Failure and Default Modes of Operation (Wireless Controls)

The following table provides output values for failure and default modes of operation, which can be used for troubleshooting.

Table 45. Output values

Situation	Zone temperature output	Zone setpoint output	Heating setpoint output	Fan/ System output
Receiver address = 000	11.17 kΩ, 72.5°F (22.5°C), indefinitely	451 Ω, 72.5°F (22.5°C), indefinitely	501 Ω, 70.5°F (21.4°C), indefinitely	2320 Ω Fan = Auto System = Off
Receiver address = 001 to 999 and: Receiver is powered up, but not is associated, or Receiver has received a disassociation request from the associated sensor.	11.17 kΩ, 72.5°F (22.5°C) Hold for 15 minutes, then open	451 Ω, 72.5°F (22.5°C), Hold for 15 minutes, then open	501 Ω, 70.5°F (21.4°C), indefinitely	2320 Ω Fan = Auto System = Off
Receiver address = 001 to 999 and receiver has not received a communication within 35 minutes from the associated sensor.	Open	Open	Open	Open
Receiver has no power.	Open	Open	Open	Open
Thermistor in sensor has failed to either open or close.	Open	Normal value	Normal value	N/A
Setpoint potentiometer has failed to either open or close.	Normal value	Open	Open	N/A

Measuring Output Resistance (Wireless Controls)

To measure the resistance of receiver outputs for zone temperature and setpoints for all models, and heating setpoint and fan/system for the WDS:

1. Ensure that the GND-SIGNAL (black) wire and the GND-POWER (yellow) wire are grounded to the transformer.
2. Disconnect the ZONE (white) and SETPOINT (RED) wires from the controller. Disconnect the HEAT

SETPOINT (brown) and FAN/SYSTEM (green) wires from the controller, if applicable.

3. Measure resistance as follows:
   a. All models: Measure between the grounded GND-SIGNAL (black) wire and either the SETPOINT (red) or ZONE (white) wire. Compare resistance measurements to those in Table 46.
   b. WDS only: Measure between the grounded GND-SIGNAL (black) wire and the FAN/SYSTEM (green) wire. Compare resistance measurements to those given in Table 47.

   Note: *The output circuits are not electrically powered; consequently, resistance can be measured without risk of damage to the volt-ohm meter.*

Table 46. Receiver resistance table for all models (wireless controls)

Zone or setpoint temperature	Nominal zone temperature output resistance	Nominal setpoint and heating setpoint output resistance
55°F (12.8°C)	17.47 kΩ	792 Ω
60°F (15.6°C)	15.3 kΩ	695 Ω
65°F (18.3°C)	13.49 kΩ	597 Ω
70°F (21.1°C)	11.9 kΩ	500 Ω
75°F (23.9°C)	10.5 kΩ	403 Ω
80°F (26.7°C	9.3 kΩ	305 Ω
85°F (29.4°C)	8.25 kΩ	208 Ω

Table 47. Receiver resistance table for model WDS (wireless controls)

Fan command	Nominal output resistance
High	16,130 Ω
Med	13,320 Ω
Low	10,770 Ω
Auto	2320 Ω
Off	4870 Ω

Cleaning the Sensor (Wireless Controls)

NOTICE

Sensor Damage!

Do not spray glass cleaner or any other solution directly on the sensor as it could damage it.

You can clean the sensor by applying glass cleaner to a soft, non-abrasive cloth, and gently wiping the face, including the buttons and LCD display. Use of a pre-moistened towelette designed for lens or screen cleaning is also acceptable.

Avoid inadvertent pressing of the Occupied/Unoccupied buttons on the keypad on the WDS sensor as this may result in an unwanted timed override or settings change.

If the LED is off, either the power is off, an abnormal

Troubleshooting (Tracer® ZN520)

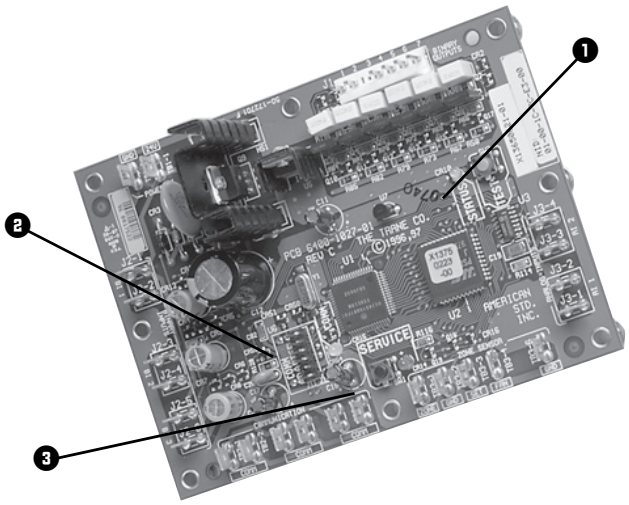

1. **Green STATUS LED**
   Indicates Whether the Controller is Powered On (24 Vac Supplied)
2. **Yellow COMM LED**
   Indicates if Communication is Functioning
3. **Red SERVICE LED**
   Indicates if Service is Needed

Red SERVICE LED (Tracer® ZN520)

During normal operation, the LED is off continuously when power is applied to the controller.

If the LED is on continuously, even when power is applied to the controller means that someone is pressing the SERVICE button or that the controller has failed.

If the LED flashes once every second, use Rover, Trane's service tool, to restore the unit to normal operation. Refer to the Rover product literature for more information.

Note: *If the Service button is held down for more than 15 seconds on the Tracer® ZN520 controller, it will uninstall itself from the ICS communication network and shut down all unit operation.*

Green STATUS LED (Tracer® ZN520)

During normal operation, the LED is on continuously.

If the LED blinks once, the controller is in Manual output test mode.

If the LED blinks twice the controller is in Manual output test mode, with one or more diagnostics present.

If the LED blinks (1/4 second on, 1/4 second off for 10 seconds) the controller is in the "Wink" mode.

Note: *The "wink" feature allows the identification of a particular controller. When sending a request from a device, such as Rover, the controller will "wink" to indicate it received the signal.*

condition is present or the TEST button is pressed.

Yellow COMM LED (Tracer® ZN520)

If the LED is off continuously, the controller is not detecting any communication. This is normal for units in standalone applications.

If the LED blinks, the controller detects communication.

If the LED is on continuously, this indicates an abnormal condition.

Manual Output Test (Tracer® ZN520)

The purpose of the manual output test sequence is to verify output and end device operation. Use the manual output test to:

- Verify output wiring and operation without using Rover, service tool
- Force the water valve to open and balance the hydronic system

Note: *The manual output test is not an automatic cycle. You must press the TEST button to proceed through each step.*

The controller observes all diagnostics that occur during the test sequence. Although an automatic diagnostic reset sequence exists as part of the controller's normal operation, the automatic diagnostic reset feature is not active during the test sequence.

If left in an individual test step, the controller remains in test mode for 60 minutes and then exits to normal operation.

Many service calls are due to unit diagnostics. The test sequence resets unit diagnostics and attempts to restore normal unit operation prior to testing the outputs. If the diagnostics remain after a reset, the STATUS LED indicates the diagnostic condition is still present (two blinks).

Manual Output Test Procedure (Tracer® ZN520)

Follow the procedure below to test Tracer® ZN520 controllers.

1. Press and hold the TEST button for at least two seconds (not exceeding 5 seconds), and then release, to start the test mode.
2. The test sequence will turn off all outputs and then attempt to clear all diagnostics.
3. Press the TEST button several more times (no more than once per second) to advance through the test sequence.

The outputs are not subject to minimum times during the test sequence. However, the test sequence only permits one step per second which limits minimum output time.

The green LED is turned off when the TEST button is pressed. To begin the manual output test mode, press and hold the TEST button (turning off the green LED) for at least two seconds.The green LED will begin to blink, indicating the controller is in test mode.

Table 48. Test sequence for 1-heat/1-cool configurations (Tracer® ZN520)

Steps	Fan BOP1-3	Cool Output BOP4[a]	Heat Output BOP5	Damper BOP6
1. Off	Off	Off	Off	Closed
2. Fan High	High	Off	Off	Closed
3. Fan Medium	Medium	Off	Off	Closed
4. Fan Low	Low	Off	Off	Closed
5. Cool	High	On	Off	Closed
6. Heat	High	Off	On	Closed
7. Fresh Air Damper[b]	High	Off	Off	Open
8. Exit	[c]			

Note: For all 1-heat/1-cool applications including 2-pipe changeover, BOP4 energizes in the cooling test stage and BOP5 energizes in the heat test stage.This occurs even though during normal 2-pipe changeover operation BOP4 controls the unit valve for both cooling and heating.

(a) At the beginning of the Fan High step, the controller attempts to clear all diagnostics.
(b) The fresh air damper (BOP6) only energizes during this step if binary output 6 has been configured as a fresh air damper.
(c) After the Fresh Air Damper step, the test sequence performs the Exit step.This initiates a reset and attempts to return the controller to normal operation.

Troubleshooting (UC400)

If encountering operational problems with the UC400 controller, refer to the following troubleshooting tables.

Table 49. Fan does not energize (UC400)

Probable Cause	Explanation
Unit wiring	The wiring between the controller outputs and the fan relays and contacts must be present and correct for normal fan operation. Refer to applicable wiring diagram.
Failed end device	The fan motor and relay must be checked to ensure proper operation.
Normal operation	The fan will turn **OFF** when: • The controller receives a communicated off signal • The fan-speed switch is set to **OFF** if no communicated value is present • Specific diagnostics are generated • The default fan speed is set to **OFF** and the fan is operating in the Auto mode. If the controller is in unoccupied mode, the fan cycles between **OFF** and the highest fan speed.
No power to the controller	If the controller does not have power, the unit fan does not operate. For the controller to operate normally, it must have an input voltage of 24 Vac. If the Marquee/Power LED is **OFF** continuously, the controller does not have sufficient power or has failed.
Diagnostic present	Several diagnostics affect fan operation. See the diagnostic section for more information.
Unit configuration	The controller must be properly configured based on the actual installed end devices and application. If the unit configuration does not match the actual end device, the fans may not work correctly.
Random start observed	After power-up, the controller always observes a random start from 5 to 30 seconds. The controller remains **OFF** until the random start time expires.
Cycling fan operation/ continuous	The controller continuously operates the fan when in the occupied, occupied standby, or occupied bypass mode. When the controller is in the unoccupied mode, the fan is cycled between high speed and **OFF** with capacity.
Unoccupied operation	Even if the controller is configured for continuous fan operation, the fan normally cycles with capacity during unoccupied mode. While unoccupied, the fan cycles **ON** or **OFF** with heating/cooling to provide varying amounts of heating or cooling to the space.

Table 49. Fan does not energize (UC400) (continued)

Probable Cause	Explanation
Fan mode off	If a local fan mode switch determines the fan operation, the **OFF** position controls the fan to off.
Requested mode off	The user can communicate a desired operating mode (*such as **OFF**, heat, and cool*) to the controller. If **OFF** is communicated to the controller, the unit controls the fan to off. There is no heating or cooling.

Table 50. Valves remain closed (UC400)

Probable Cause	Explanation
Unit wiring	The wiring between the controller outputs and the valve(s) must be present and correct for normal valve operation. Refer to applicable wiring diagram.
Failed end device	The valves must be checked to ensure proper operation.
No power to the controller	If the controller does not have power, the unit valve(s) will not operate. For the controller to operate normally, apply an input voltage of 24 Vac. If the Marquee/Power LED is **OFF** continuously, the controller does not have sufficient power or has failed.
Diagnostic present	Several diagnostics affect valve operation. See the diagnostic section for more information.
Normal operation	The controller opens and closes the valves to meet the unit capacity requirements.
Unit configuration	The controller must be properly configured based on the actual installed end devices and application. If the unit configuration does not match the actual end device, the valves may not work correctly.
Random start observed	After power-up, the controller always observes a random start from 5 to 30 seconds. The controller remains **OFF** until the random start time expires.
Requested mode off	The user can communicate a desired operating mode (such as **OFF**, heat, and cool) to the controller. If **OFF** is communicated to the controller, the unit controls the fan to off. There is no heating or cooling.
Entering water temperature sampling logic	The controller includes entering water temperature sampling logic, which is automatically initiated during 2-pipe and 4-pipe changeover, if the entering water temperature is either too cool or too hot for the desired heating or cooling.
Valve configuration	Ensure the valves are correctly configured, using the Tracer® TU service tool, as normally open or normally closed as dictated by the application.

Table 51. Valves remain open (UC400)

Probable Cause	Explanation
Unit wiring	The wiring between the controller outputs and the valve(s) must be present and correct for normal valve operation. Refer to applicable wiring diagram.
Failed end device	The valves must be checked to ensure proper operations.
Normal operation	The controller opens and closes the valves to meet the unit capacity requirements.
Diagnostic present	Several diagnostics affect valve operation. See the diagnostic section for more information.
Unit configuration	The controller must be properly configured based on the actual installed end devices and application. If the unit configuration does not match the actual end device, the valves may not work correctly.
Entering water temperature sampling logic	The controller includes entering water temperature sampling logic, which is automatically initiated during 2-pipe and 4-pipe changeover, if the entering water temperature is either too cool or too hot for the desired heating or cooling.

Table 51. Valves remain open (UC400) (continued)

Probable Cause	Explanation
Valve configuration	Ensure the valves are correctly configured, using the Tracer® TU service tool, as normally open (NO) or normally closed (NC) as dictated by the application.
Freeze avoidance	When the fan is **OFF** with no demand for capacity (0%), and the outdoor air temperature is below the freeze avoidance setpoint, the controller opens the water valves (100%) to prevent coil freezing. This includes unoccupied mode when there is no call for capacity or any other time the fan is **OFF**.

Table 52. DX or electric heat does not energize (UC400)

Probable Cause	Explanation
Unit wiring	The wiring between the controller outputs and the end devices must be present and correct for normal operation. Refer to applicable wiring diagram.
Failed end device	Check the control contactors or the electric heat element, including any auxiliary safety interlocks, to ensure proper operation.
No power to the controller	If the controller does not have power, heat outputs do not operate. For the controller to operate normally, apply an input voltage of 24 Vac. If the Marquee/Power LED is **OFF** continuously, the controller does not have sufficient power or has failed.
Diagnostic present	Several diagnostics affect DX and electric heat operation. See the diagnostic section for more information.
Normal operation	The controller controls compressor or electric heat outputs as needed to meet the unit capacity requirements.
Unit configuration	The controller must be properly configured based on the actual installed end devices and application. If the unit configuration does not match the actual end device, DX or electric heat may not operate correctly.
Requested mode off	The user can communicate a desired operating mode (such as **OFF**, heat, and cool) to the controller. If **OFF** is communicated to the controller, the unit shuts off the compressor or electric heat.
Freeze avoidance	When the fan is **OFF** with no demand for capacity (0%), and the outdoor air temperature is below the freeze avoidance setpoint, the controller disables compressors and electric heat outputs (100%) to prevent coil freezing. This includes unoccupied mode when there is no call for capacity or any other time the fan is **OFF**.

Table 53. Outdoor air damper remains closed (UC400)

Probable Cause	Explanation
Unit wiring	The wiring between the controller outputs and the outdoor air damper must be present and correct for normal outdoor air damper operation. Refer to applicable wiring diagram.
Failed end device	Check damper actuator to ensure proper operation.
No power to the controller	If the controller does not have power, the outdoor air damper does not operate. For the controller to operate normally, apply an input voltage of 24 Vac. If the Marquee/Power LED is **OFF** continuously, the controller does not have sufficient power or has failed.
Diagnostic present	Several diagnostics affect outdoor air damper operation. See the diagnostic section for more information.
Normal operation	The controller opens and closes the outdoor air damper based on the controller's occupancy mode and fan status. Normally, the outdoor air damper is open during occupied mode when the fan is running and closed during unoccupied mode.
Unit configuration	The controller must be properly configured based on the actual installed end devices and application. If the unit configuration does not match the actual end device, the outdoor air damper may not work correctly.

Table 53. Outdoor air damper remains closed (UC400)

Probable Cause	Explanation
Warm-up and cool-down sequence	The controller includes both a morning warm-up and cool-down sequence to keep the outdoor air damper closed during the transition from unoccupied to occupied. This is an attempt to bring the space under control as quickly as possible.
Requested mode off	The user can communicate a desired operating mode (such as **OFF**, heat, or cool) to the controller. If **OFF** is communicated to the controller, the unit closes the outdoor air damper.

Table 54. Outdoor air damper remains open

Probable Cause	Explanation
Unit wiring	The wiring between the controller outputs and the outdoor air damper must be present and correct for normal outdoor air damper operation. Refer to applicable wiring diagram.
Failed end device	Check damper actuator to ensure proper operation.
Normal operation	The controller opens and closes the outdoor air damper based on the controller occupancy mode and fan status. Normally, the outdoor air damper is open during occupied mode when the fan is running and closed during unoccupied mode.
Unit configuration	The controller must be properly configured based on the actual installed end devices and application. If the unit configuration does not match the actual end device, the outdoor air damper may not work correctly.

Troubleshooting (Thermostat)

Table 55. Thermostat troubleshooting

Probable Cause	Explanation
No display	Check for voltage at thermostat; display is blank when voltage is not present.
System fan does not come on properly	Verify wiring is correct, check connections are correct.
Thermostat turns on and off too frequently	Adjust temperature differential (see Configuration Mode Setting 10)
Room temperature is not correct	Calibrate thermostat (see Configuration Mode Setting 14) If remote sensor is used, check connections.
Displays when any button is pressed	Thermostat has the button lockout function activated (see Lockout Feature and Configuration Mode Setting 15).
- - On display instead of room temperature	Check for a bad connection if remote sensor is used (see Configuration Mode Setting 4).
Heat or Cool not coming on (No pipe sensor)	Verify wiring is correct, gently pull on each wire to verify there is a good connection, verify configuration settings.
Heat or Cool not coming on (Pipe sensor connected)	Check pipe sensor temperature by pressing up and down buttons in – if out of range, outputs may not turn on (see Configuration Mode Settings 6-9).

Troubleshooting (ECM)

⚠WARNING

Hazardous Voltage w/Capacitors!

Failure to disconnect power and discharge capacitors before servicing could result in death or serious injury. Disconnect all electric power, including remote disconnects and discharge all motor start/run capacitors before servicing. Follow proper lockout/tagout procedures to ensure the power cannot be inadvertently energized. For variable frequency drives or other energy storing components provided by Trane or others, refer to the appropriate manufacturer's literature for allowable waiting periods for discharge of capacitors. Verify with a CAT III or IV voltmeter rated per NFPA 70E that all capacitors have discharged.

⚠WARNING

Safety Alert!

You MUST follow all instructions below. Failure to do so could result in death or serious injury.

- **The BLDC motors contain capacitors which store residual energy. Please keep clear of the fan wheels for 5 minutes after the power has been removed from the system, as a power request with the motor powered off, could result in a very short period of actuation. Unplugging the motor is adequate to ensure that there will be no power request.**
- **The adapter boards contain high voltage. Configuration adjustments to the ECM engine board should be made through the SMALLER of the two low-voltage lids on the front of the control panel, through the low-voltage insulation/shielding.**
- **Initial hookups to the CSTI and standard adapter boards, including low voltage interconnections, must be made with the power off.**
- **Do not make connections to the motors or the adapter boards while power is ON. Do not remove connections to the motor or the adapter boards while the power is ON.**

Notes:

- *The new Trane BLDC system is a closed loop system that has equipment protections and envelope enforcements. Do not assume that the motor has failed without first consulting the ECM engine status/diagnostics screen. In many cases, the engine shuts down the motor operation and locks it out to prevent equipment damage.*
- *Electric Heat operation and Changeover Coil control on CSTI units are co-coordinated by the ECM engine board. Changeover function on Tracer® ZN units can also be affected by incorrect configuration of the ECM engine or improper wiring of terminals to analog*

input 1 on the Tracer® ZN controller (polarity sensitivity).

- *The mini-access lid on the front of the main control panel lid has the ECM engine troubleshooting/setup guide affixed to the back of the lid. This guide is unit-specific and should be consulted before determining the disposition of a unit.*

General Information (ECM)

The ECM engine oversees and monitors all motor operations and changes to speed resulting from:

- Direct Fan Speed Requests
  - Customer Fan Speed Switches
  - Thermostat Fan Speed, On or 0–10V requests
  - Automatic Fan Request from Tracer® ZN / UC controllers
- Indirect Fan Speed Requests
  - Electric Heat requests will bring the fan to the proper speed.
- Conflicting Fan Speed Requests
  - If two or more commands are received (direct or indirect), the fan will honor the higher speed requested.

Note: *In some cases, indirect requests will result in fan behavior change regardless of whether the end-device fails to actuate (due to device failure, or safety/down-stream lockouts).*

The ECM engine board also coordinates the operation of Electric Heat, Electric/Hydronic Heat lockouts, and CSTI Changeover coil operation.

Troubleshooting Information (ECM)

General System Troubleshooting Tips (ECM)

- ECM engine configuration must perfectly match the factory-supplied ECM.
  - Refer to "ECM Overview and Setup for troubleshooting configuration of the engine board.
- The ECM engine will display troubleshooting information, and contains dual tachometers to aid in performance verification.
- Under normal circumstances, the ECM engine display will display the operational status of the motors and electric heat circuit/sensors, however, a malfunction will drive a priority display mode that will present the error code instantly to the screen. The error must be cleared by solving by powering down, removing the cause of the problem and restarting the engine board.
- Engine Label setup document (affixed to the back of the low voltage access lid) should be used to verify engine configuration settings.
- For proper operation of the system, all plugs must be firmly seated in all boards and motors. Insecure connections will cause malfunction and the system will shutdown.
- Do not unplug or plug-in motors or connectors while the system is receiving a speed request of any kind. The system must be powered down before plugging or un-plugging connections to the adapter boards, engine boards or motors. Failure do so will register diagnostics or cause unsafe operation and reduction in the contact life of the connectors.
- The motor will not spin if plugged in while the ECM engine is requesting power.

Troubleshooting a Motor that does not Spin, or Spins too Slowly (ECM)

The motor connections and motor plug connections to the adapter boards should be secure. Unit should be powered off to check the fit of the connectors.

When configured correctly, the system will always respond positively to direct, indirect, and conflicting speed requests with very few exceptions:

These exceptions are:

1. If a motor has been locked out due to engine locked rotor protection:
   - Assuming Motor 1 has an obstruction. In this case, the "Status Display" will be interrupted to display:

     LOCH → mtr 1 → LrPt

     Solution:

     i. Remove obstruction from the fan wheel.

     ii. Ensure that motor plugs and all plugs to adapter boards and the ECM engine board are secure

     iii. Verify that the configuration does not specify a motor that is physically missing. Most units require only one motor. The controller is made aware of the missing motor by specifying all speeds related to Motor 2 to 0 rpm.

     iv. Verify that m1LO and m2LO, the low motor signal output limits, are set correctly.
2. If a motor has been locked out due to overspeed or runaway condition:
   - Assuming Motor 1 has an overspeed condition. In this case, the "Status Display" will be interrupted to display:

     OSPd → mtr 1 → OSPd

     Solution:

     i. Ensure that set-screw is attached firmly to the motor shaft.

     ii. Ensure that motor plugs and all plugs to adapter boards and the ECM engine board are secure.

     iii. Verify that the configuration does not specify a speed lower than 450 rpm for the affected motor. Speeds below 450 rpm are not supported on fan-coil units.

3. VSP Inputs (0–10V inputs) are of the wrong polarity
   – Verify that variable speed (VSP) inputs are properly wired to 1TB4.

   Notes:

   •Do not short the courtesy 10 Vdc supply to chassis or loads that require greater than 10 mA of DC current.

   •Please observe proper polarity of 0–10 Vdc inputs. Failure to observe proper polarity can cause failure of the ECM engine board, the customer-supplied controller or the Tracer® ZN controller.

4. Customer Controller output signal to VSP Inputs are too low.

   Note: *If the customer supplied controller outputs signals that are below the noise threshold, they will be ignored by the ECM Engine.*

   – The ECM Engine board contains an adjustable noise floor parameter, uFLr that can be configured to reject signals below the noise floor.

   – If the noise floor parameter is set too high, it can be lowered as long as there are acceptable noise levels on the inputs lines.

Troubleshooting a Motor that Spins too Fast, or Spins without any Apparent Speed Request (ECM)

Typical equipment and controls design practice will ensure that the fans will come on if there is a call for heat, cool, or ventilation. In most cases, we will depend on the controller/thermostat to call for the fan to come on when appropriate, but during calls for electric heat, or calls for heat on CSTI units equipped with electric heat, as a call for the appropriate fan speed. This behavior, as described previously, is an indirect request.

When a call for electric heat is made, the system will positively drive the fan on to the correct speed, regardless of whether the controller has asked for fan operation or not. The unit design incorporates an interlock instead of a lock-out. (It does not lock out electric heat if the fan is set to off; it brings the fan on.)

Notes:

- *In many cases, indirect requests will result in fan behavior change regardless of whether the end-device fails to actuate (due to device failure, or safety/down-stream lockouts). If there is hot water available on CSTI units with changeover coils and electric heat, we will still drive the fan to the appropriate electric heat speed.*

If the preceding conditions do not describe the behavior of the unit, the following checks should be performed:

- Verify that the voltage jumper on the motor plug harness is absent for 208-230V units and 277V units. If the jumper is present for these units, the motor electronics will be damaged, and the motor will not be controllable.
- Verify that the fan speed request is not below 450 rpm.
- Verify that the all binary inputs to the customer terminal blocks are of proper and consistent polarity.
  – For CSTI units, the fan inputs and end device inputs on TB3 must receive signals that are 24 Vac with respect to the unit chassis.

    Note: *Do not short 24 Vac (pos 1 or pos 2) to chassis; refer to the unit schematic.*

  – For Fan Speed Switch units, that incorporate the Tracer® ZN/CSTI adapter board, all inputs to TB3 must be 24 Vac with respect to unit chassis.

    Note: *Do not short 24 Vac (pos 1 or pos 2) to chassis; refer to the unit schematic.*

  – For Tracer® ZN units, where there is a desire to use parallel fan inputs on the adapter board TB3 strip, the inputs must be COM (i.e., the inputs will honor only 0 V with respect to unit chassis).

    Note: *Do not short 24 Vac (pos 1 or pos 2) to chassis; refer to the unit schematic.*

- Verify that variable speed (VSP) inputs are properly wired to 1TB4.

  Notes:

  •Do not short the courtesy 10 Vdc supply to chassis or loads that require greater than 10 mA of DC current.

  •Please observe proper polarity of 0–10 Vdc inputs. Failure to observe proper polarity can cause failure of the ECM Engine board, the customer-supplied controller or the Tracer® ZN controller.

- Verify that the signal on the VSP inputs is noise free. The ECM engine board contains an adjustable noise floor parameter, uFLr, that can be configured to reject signals below the noise floor.

  Note: *If the customer supplied controller outputs signals that are below the noise threshold, they will be ignored by the ECM engine.*

- Verify that VSP input settings are correct. The ECM engine board contains an adjustable digital amplifier, A1Sc, to compensate for long 10 Vdc cable runs. For normalized (0–10 Vdc) signals, this setting should be set to 1.000. If it is set too high, the motors will faster than the requested ratio, and will hit the limit Ahi1 before the input voltage has reached its upper limit.
- Verify that n1Lo and n2Lo, the low motor signal output limits, are set correctly.

Replacing ECM Components

⚠WARNING

Hazardous Voltage w/Capacitors!

Failure to disconnect power and discharge capacitors before servicing could result in death or serious injury. Disconnect all electric power, including remote disconnects and discharge all motor start/run capacitors before servicing. Follow proper lockout/tagout procedures to ensure the power cannot be inadvertently energized. For variable frequency drives or other energy storing components provided by Trane or others, refer to the appropriate manufacturer's literature for allowable waiting periods for discharge of capacitors. Verify with a CAT III or IV voltmeter rated per NFPA 70E that all capacitors have discharged.

⚠WARNING

Safety Alert!

You MUST follow all instructions below. Failure to do so could result in death or serious injury.

- **The BLDC motors contain capacitors which store residual energy. Please keep clear of the fan wheels for 5 minutes after the power has been removed from the system, as a power request with the motor powered off, could result in a very short period of actuation. Unplugging the motor is adequate to ensure that there will be no power request.**
- **The adapter boards contain high voltage. Configuration adjustments to the ECM engine board should be made through the SMALLER of the two low-voltage lids on the front of the control panel, through the low-voltage insulation/shielding.**
- **Initial hookups to the CSTI and standard adapter board, including low voltage interconnections, must be made with the power off.**
- **Do not make connections to the motors or the adapter boards while power is ON. Do not remove connections to the motor or the adapter boards while the power is ON.**
- **Caution should be taken to stay clear of hazardous voltages, moving parts and electric heat elements while making adjustments to the ECM engine board. If it is not practical to stay clear of these areas during adjustment of the ECM engine board, please contact Trane Global Parts for configuration kit that allows easy powering of the engine board outside of the unit with a 9V battery.**
- **For safe operation, it is necessary to configure replacement boards to match the setup/switch configuration of the previously installed boards.**
- **Ensure that new circuit modules are firmly seated on the nylon standoffs, and that the nylon standoffs are firmly seated on the metal panel.**

NOTICE

Equipment Damage!

The motor harness attached to the single plug to which the motor mates contains the very important 115V motor voltage jumper; the motor harness should always be present for 115V units and should not be modified or substituted. Failure to follow this instruction could result in equipment damage.

Notes:

- *Ensure that drip-loops are maintained on wiring on pipe end of unit to avoid wicking of water into the unit.*
- *Before assuming that any of the boards or components in the new system have failed, please ensure that the ECM engine board has been configured correctly and that the switches on the CSTI board (where applicable) are set correctly.*
- *It is necessary to configure the service replacement ECM engine board before commissioning the unit. The ECM engine board is pre-configured with safe values, but will NOT work correctly unless properly configured.*
- *Only genuine Trane® replacement components with identical Trane part numbers should be used.*
- *Unit fan assemblies contain concealed wires that should be removed before the fan-board is removed, to avoid nicking the wire.*
- *Care should be maintained to retain the order of the motors with respect to the motor plugs. On a unit with two motors, the double-shafted motor will always be to the left side, and will be designated as Motor 2 by the controller.*

Tips:

- *Ensure that motor nameplate voltage is the same as unit voltage (for 3-phase/ 4-wire units with Neutral, motor voltage will be L-N, not L1-L2).*
- *Ensure that motor harness is correct (harness will have jumper installed for 115V units only).*
- *Ensure that configuration on ECM Engine matches the affixed label.*
- *Maintain correct plug/motor association. The plugs will have the motor number and shaft configuration printed on an affixed label.*
- *Ensure that configuration of switches on CSTI adapter board matches depiction of switches on the unit schematic.*
- *Ensure that all wires are plugged in securely.*
- *Ensure that edge protection on sharp edges, grommets, and wire management devices are maintained when replacing components.*
- *Ensure that blunt-tip screws are used when in the proximity of wire harnesses.*

Circuit Modules Replacement Notes/Work Instructions

1. Circuit modules are equipped with nylon standoffs which can either be removed by squeezing the barbs at the rear of the control panel, or squeezing the latch above the circuit module. If the latter method is chosen, the standoffs will be retained on the metal panel. The new standoffs (affixed to the replacement modules) can be removed if necessary, so the new module circuit board can be attached to the retained standoffs.

Figure 60.

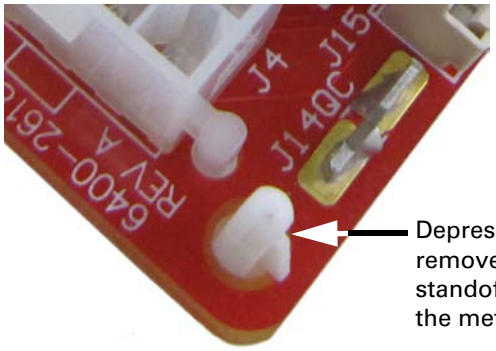

Depress latch to remove PCB, leaving standoff attached to the metal panel.

2. If replacing the ECM engine module, special care should be taken to avoid electro-static discharge damage. Please use an ESD protection wrist-strap and frequently touch a grounded surface (with unit power off) to discharge any static buildup.
3. Replace connectors carefully onto the appropriate board. For units with a green wire attached to the CSTI or standard adapter boards, please **ensure that the green wire is attached to the engine board white connector** as shown below.

Figure 61.

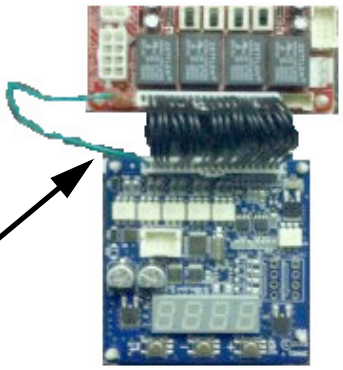

Green wire attached to white plug on blue ECM engine board, and to quick-connect terminal on the

4. Ensure that the new ECM engine controller is configured to match the ECM engine configuration label that is present on the unit. It is necessary to configure the ECM engine board to avoid improper operation of the unit, discomfort to the end user, and loud fan operation.

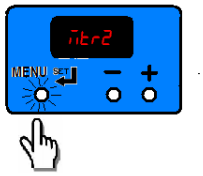

5. Ensure that the CSTI adapter board switches are set correctly, as indicated on the attached unit schematic (where applicable).

Figure 62.

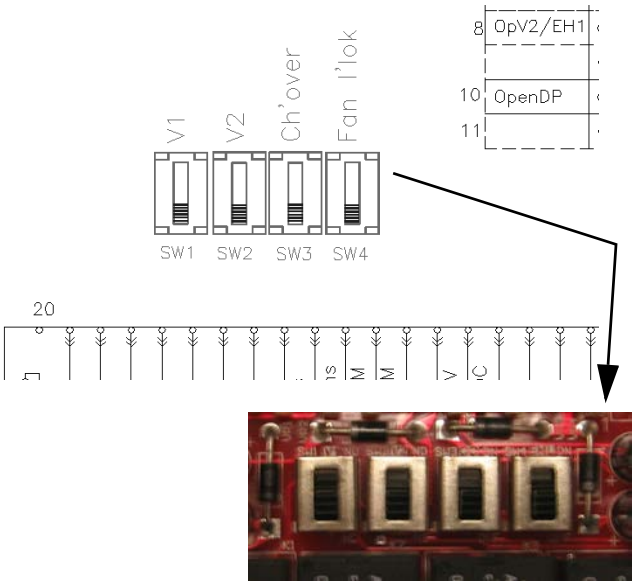

6. After replacing modules, commission the unit by performing at a minimum, "Fan Speed Response Verification.

Softsetting the IMC Address of an ECM Engine Module

When a blower coil, fan-coil, or unit ventilator application requires an ECM engine module, the Tracer® UC400 requires that the ECM engine module be configured at IMC address 99. If an engine module is found at an address other than 99 (as it will be in a field application / hardware replacement scenario), Tracer® TU populates the Expansion Module box on the Controller Status screen as shown here.

Figure 63.

Notice one ECM type is configured at address 99, but no ECM is found at that address. Also, notice that another ECM has been found with an address of 0. When this situation occurs, Tracer® TU displays a Softset… button you can use to configure the engine module address.

Complete the following steps to softset the engine module address:

1. Click the **Softset…** button to initiate the softest procedure.

   Tracer® TU displays the Softset Rotary Address - Expansion Module dialog box.

Figure 64.

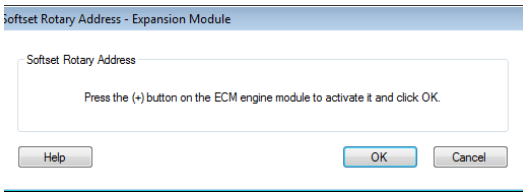

2. Prior to clicking OK, activate the engine module using the **(+)** button on the ECM engine board in the control box.

   Once the engine module is activated, the LED to the right of the (+) button lights up.

Figure 65.

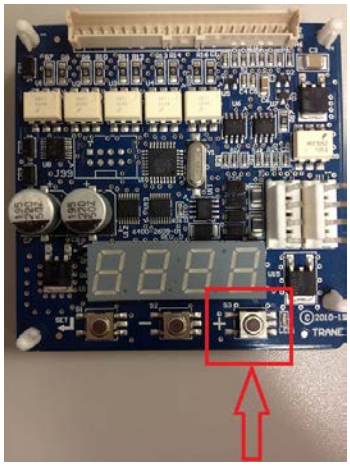

3. Once the light has been activated, click **OK** on the Softset Rotary Address - Expansion Module dialog box shown in Figure 64.

   When you click OK, Tracer® TU softsets the engine module IMC address to 99 and the light on the module will turn off.

4. Return to the Expansion Module Status box, click **Discover** and wait five to ten seconds for Tracer® TU to refresh the screen.

   Once complete, the value in the Error column updates to None and the Status column updates to Comm Up.

Figure 66.

Accessories

Wallboxes

The following instructions are general recommendations for installing wall intake boxes. Consult the architectural plans for specific requirements.

Additional materials required to complete any specific installations (such as duct connections, metal mounting plates, or flanges) *are not furnished* by Trane.

For best results, all air intake boxes should be removable from outside of the building. Weep holes must be at the bottom to permit free drainage. A positive air and moisture seal should be provided around all edges.

General Instructions

Trane wallboxes are illustrated below. Each lists the wall openings required for wallboxes.

Vertical louvers in the wall intake box provide extra strength for a high load bearing capacity. The lintel may be omitted on masonry wall installations.

Weep holes are provided in the outside face of the bottom channel in the wallbox frame. Install all wall boxes to permit free drainage through the weep holes to the outside of the building.

All wallboxes are furnished with diamond pattern expanded aluminum bird screen.

Note: *H1 (horizontal) wall models are all unflanged. H2, V3, and V6 are flanged.*

Figure 67. Horizontal louver wallbox (H1 and H2) dimensions

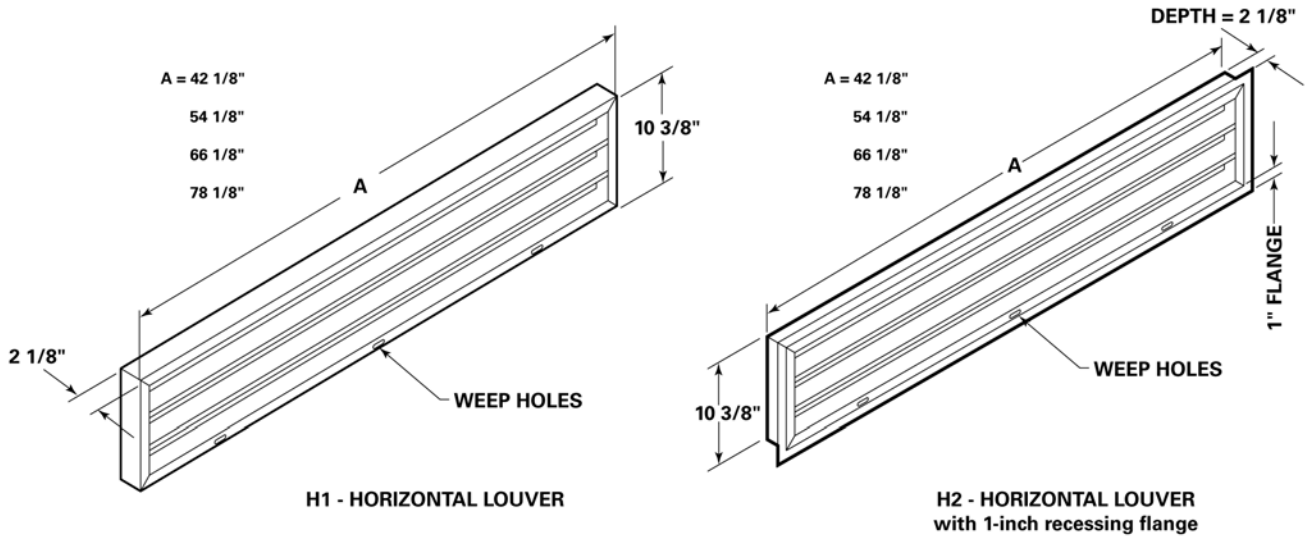

Unit Size	A	Square Feet of Free Area
075	42 1/8"	.81
100	54 1/8"	1.10
125	66 1/8"	1.39
150/200	78 1/8"	1.69

NOTE:
THE DIMENSIONS LISTED ABOVE ARE ACTUAL (NOT NOMINAL) DIMENSIONS.

THE HORIZONTAL BLADES OF THE H1 AND H2 WALL BOXES ARE SPACED 2" APART.

Figure 68. Vertical louver wallbox (V1, V3, V2, and V6) dimensions

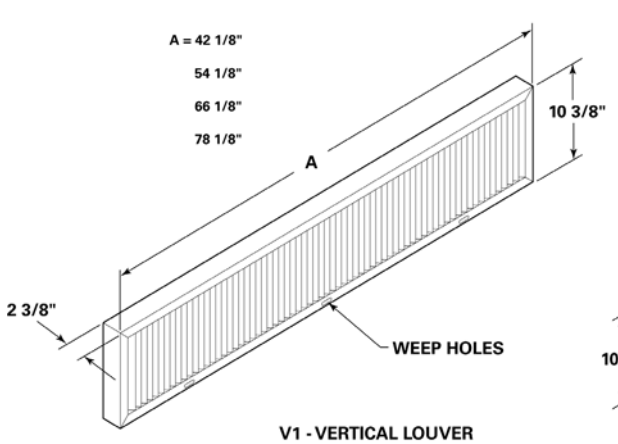

V1 - VERTICAL LOUVER

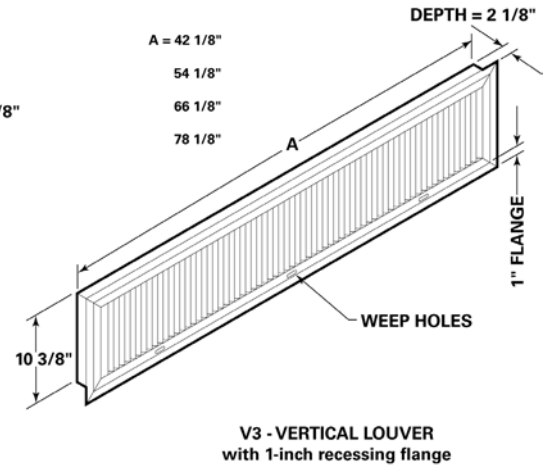

V3 - VERTICAL LOUVER
with 1-inch recessing flange

Unit Size	A	Square Feet of Free Area
075	42 1/8"	1.39
100	54 1/8"	1.88
125	66 1/8"	2.37
150/200	78 1/8"	2.87

NOTE:
THE DIMENSIONS LISTED ABOVE ARE ACTUAL (NOT NOMINAL) DIMENSIONS.

THE VERTICAL BLADES OF THE V1 AND V3 WALL BOXES ARE SPACED 3/8" APART.

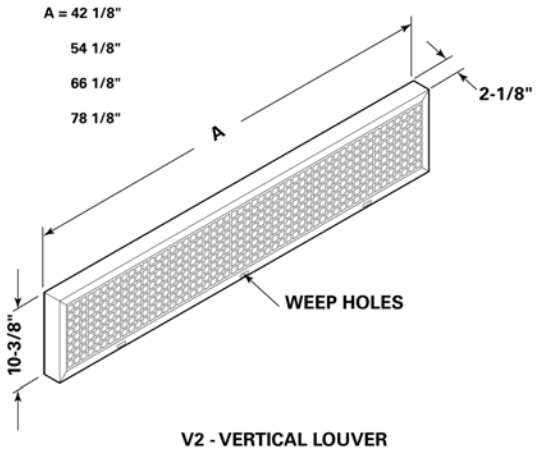

V2 - VERTICAL LOUVER

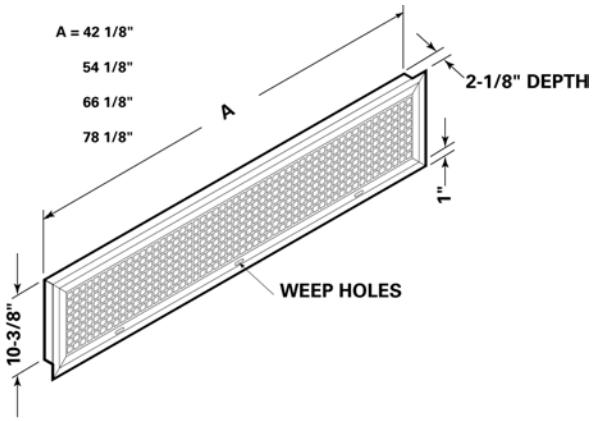

V6 - VERTICAL LOUVER
with 1-inch recessing flange

Unit Size	A	Square Feet of Free Area
075	42 1/8"	1.035
100	54 1/8"	1.345
125	66 1/8"	1.681
150/200	78 1/8"	1.992

NOTE:
THE DIMENSIONS LISTED ABOVE ARE ACTUAL (NOT NOMINAL) DIMENSIONS.

THE VERTICAL BLADES OF THE V2 AND V6 WALL BOXES ARE SPACED 3/8" APART.

Installation in Masonry Walls

A typical method of installing the wallbox in a masonry wall opening is illustrated below.

Grout the top and bottom of the wall box frame as noted. A sloped water dam located in the space between the unit and wall facilitates moisture drainage. Grouting at the ends of the intake box will complete the seal between the wall box frame and the masonry opening.

Installation in Curtain Walls

In all cases, the wall intake box should be caulked to provide a tight, weatherproof seal.

Note: *A minimum of 2-1/8 in. of clearance must be maintained between the exterior wall and back of the unit. Failure to provide this gap will not allow the wall box to fit properly.*

Figure 69. Wallbox installation in masonry wall

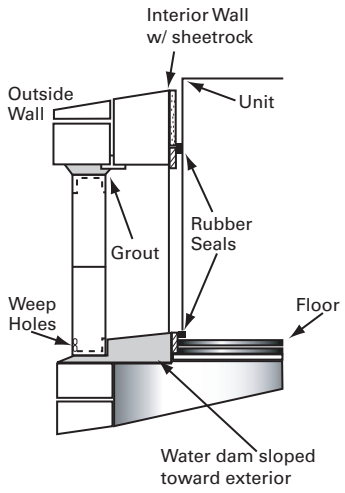

Figure 70. Flanged wallbox installation in 2-in. wall

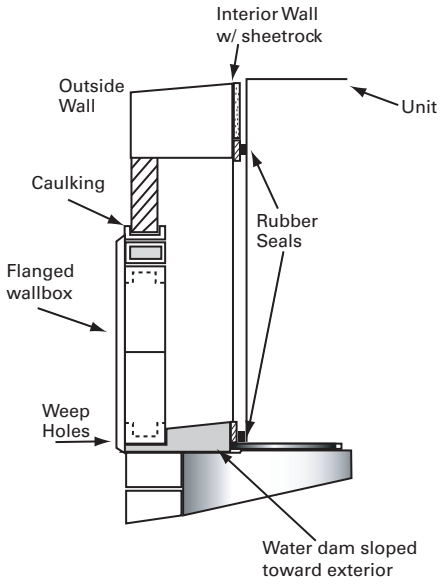

Wiring Diagrams

Table 56. Wiring diagram matrix

Number	Description
Power	
2311-4198	Power Schematic, HUV - UC400B Without Electric Heat
2311-4276	Power Schematic, HUV - ZN520 and CSTI Without Electric Heat
4619-4482	Power Schematic, HUV - UC400B With Electric Heat
4619-4483	Power Schematic, HUV - ZN520 and CSTI With Electric Heat
Controls	
2311-4271	Controls Schematic, HUV - ZN520 With Standard Coils
4619-3712	Controls Schematic, HUV - UC400B With Standard Coils
4619-3713	Controls Schematic, HUV - UC400B With Isolation Valves and Face and Bypass
4619-3714	Controls Schematic, HUV - UC400B With DX Coils
4619-3718	Controls Schematic, HUV - ZN520 With Isolation Valves and Face and Bypass
4619-3719	Controls Schematic, HUV - ZN520 With DX Coils
4619-3720	Controls Schematic, HUV - CSTI With Standard Coils
4619-3721	Controls Schematic, HUV - CSTI With Isolation Valves and Face and Bypass
4619-3722	Controls Schematic, HUV - CSTI With DX Coils
4619-4499	Controls Schematic, HUV - Wall Mounted Thermostat
Zone Sensors	
2311-4171	Zone Sensors, HUV - ZN520
2311-4274	Zone Sensors, HUV - UC400B
Electric Heat	
2311-4613	Electric Heat Schematic, 3PH-6EL-2STG-Factory Controls
2311-4614	Electric Heat Schematic, 1PH-3EL-2STG-Factory Controls
2311-4615	Electric Heat Schematic, 1PH-3EL-2STG-Factory Controls
2311-4616	Electric Heat Schematic, 1PH-4EL-2STG-Factory Controls
2311-4617	Electric Heat Schematic, 1PH-4EL-2STG-Factory Controls
2311-4618	Electric Heat Schematic, 1PH-4EL-2STG-Factory Controls
2311-4619	Electric Heat Schematic, 1PH-6EL-2STG-Factory Controls
2311-4620	Electric Heat Schematic, 1PH-6EL-2STG-Factory Controls
2311-4621	Electric Heat Schematic, 1PH-6EL-2STG-Factory Controls
2311-4623	Electric Heat Schematic, 3PH-3EL-2STG-Factory Controls
2311-4624	Electric Heat Schematic, 3PH-4EL-2STG-Factory Controls
2311-4625	Electric Heat Schematic, 3PH-4EL-2STG-Factory Controls
2311-4626	Electric Heat Schematic, 3PH-6EL-2STG-Factory Controls
2311-4627	Electric Heat Schematic, 3PH-3EL-2STG-Factory Controls
2311-4628	Electric Heat Schematic, 3PH-4EL-2STG-Factory Controls
2311-4629	Electric Heat Schematic, 3PH-6EL-2STG-Factory Controls
Component Layout	
2311-4560	Component Layout, HUV

Note: Wiring diagrams can be accessed using e-Library by entering the diagram number in the literature order number search field or by contacting technical support.

Trane - by Trane Technologies (NYSE: TT), a global climate innovator - creates comfortable, energy efficient indoor environments for commercial and residential applications. For more information, please visit trane.com or tranetechnologies.com.

Trane has a policy of continuous product and product data improvement and reserves the right to change design and specifications without notice. We are committed to using environmentally conscious print practices.

UV-SVX004D-EN 06 Nov 2021
Supersedes UV-SVX004C-EN (Feb 2021)

©2021 Trane