Product Catalog

Packaged Rooftop Air Conditioners Mixed Air Unit Light Commercial – Cooling, Gas/Electric

10 to 15 Tons, 60 Hz

May 2021

RT-PRC095A-EN

Introduction

Packaged Rooftop Air Conditioners

Mixed Air Unit provides the highest standards in quality and reliability, comfort, ease of service, and the performance of Trane light commercial products.

Trane customers demand products that provide exceptional reliability, meet stringent performance requirements, and are competitively priced. Trane delivers with Mixed Air Unit.

Mixed Air Unit features cutting edge technologies: reliable compressors, Trane engineered controls, 100% factory tested, and Integrated Comfort™ Systems. Whether you're the contractor, the engineer, or the owner, you can be certain Mixed Air Unit products are built to meet your needs.

Copyright

This document and the information in it are the property of Trane, and may not be used or reproduced in whole or in part without written permission. Trane reserves the right to revise this publication at any time, and to make changes to its content without obligation to notify any person of such revision or change.

Trademarks

All trademarks referenced in this document are the trademarks of their respective owners.

Table of Contents

Features and Benefits 4
- Standard Features and Available Options 4
- Standard Unit Features 6
- Standard Control Features 6
- Optional Features 6
- Other Features and Benefits 7

Application Considerations 9
- Clearance Requirements 9
- Eco coated Coil 9
- Condensate Trap 9
- Dual Compressors — 5 Stages of Cooling (10 – 15 Tons) 9
- Heating Operation 9
- Optional Stainless Steel Heat Exchanger 9
- Unit Pitch 9
- Low Airflow 9

Model Number Descriptions 10

General Data 12

Dimensional Data 16

Unit Weights (lb) and Center of Gravity Dimensions (in) 30

Mechanical Specifications 31
- Mixed Air Unit Mechanical Specifications 31

Features and Benefits

Standard Features and Available Options

Table 1. Mixed air unit commercial control features — standard and optional

	Standard Features	Options		
		Factory Installed	Factory or Field Installed	Field Installed
BACnet® Communications Interface (BCI)			X	
Discharge Line Thermostat	X			
Humidity Sensor				X
Thermostat				X
Trane® Communications Interface (TCI)			X	
Wireless Zone Sensor				X
Zone Sensors and Remote Zone Sensors				X

Table 2. Mixed air unit commercial control features — standard and optional

	Standard Features	Options		
		Factory Installed	Factory or Field Installed	Field Installed
1-year Limited Parts Warranty	X			
5-year Limited Compressor Warranty	X			
5-year Limited Aluminized Heat Exchanger Warranty				
2-inch MERV 8 Filters or 2-inch MERV 13 Filters with Filter Removal Tool		X		
Anti-Short Cycle Timer	X			
Direct Drive Motors	X			
Clogged Filter Switch		X		
Fan Failure Switch	X			
CO_2 Sensor				X
Colored and Numbered Wiring	X			
Eco Coat Heat Exchanger Coils		X		
Condensate Overflow Switch		X		
Crankcase Heater (Not required for variable speed compressor)	X			
Dehumidification (Hot Gas Reheat)		X		
Digital Display Zone Sensor				X
Discharge Air Temperature Sensing Kit			X	
Easy Access Low Voltage Terminal Board (LTB)	X			
Economizer - Standard, Downflow		X		
Electric Heaters			X	
Fault Detection and Diagnostics (FDD)		X		
Robust unit construction with 2-inch doublewall panels with foam insulation for an R value 13	X			
Frostat™			X	

Table 2. Mixed air unit commercial control features — standard and optional (continued)

	Standard Features	Options		
		Factory Installed	Factory or Field Installed	Field Installed
High Efficiency Gas Heat		X		
High Efficiency Motors	X			
High Pressure Cutout	X			
High Short Circuit Current Rated (SCCR) Electrical Subsystem		X		
Hinged Access Doors	X			
Human Interface - 7-inch Color Touchscreen		X		
Indoor Fan Motor Shaft Grounding Ring		X		
Liquid Line Refrigerant Drier	X			
Low Leak Economizer - Downflow		X		
LP Conversion Kit		X		
Manual Outside Air Dampers		X		
Microchannel Condenser Coils	X			
Fin and tube Evaporator Coils	X			
Modulating ALZ Gas Heat Furnace with a 1.8:1 Turndown Ratio		X		
Modulating SS Gas Heat Furnace with a 10:1 Turndown Ratio		X		
Motorized Outside Air Dampers		X		
Multi-Speed Indoor Fans		X		
Operating Charge of R-410A	X			
Phase Monitor	X			
Powered Exhaust		X		
Convenience Outlet		X		
Roof Curb (Downflow Only)				X
Single Point Power	X			
Single Zone Variable Air Volume (SZ VAV)		X		
Stainless Steel Drain Pan	X			
Stainless Steel Heat Exchanger with 10 Year limited warranty	X			
Supply and/or Return Air Smoke Detector				X
Thermal Expansion Valve	X			
Through the Base Electrical Access	X			
Through the Base Electrical with Circuit Breaker Or Disconnect switch	X			
Variable Frequency Drive (Multi-speed Indoor Fan, VAV, and Single Zone VAV)	X			
Ventilation Override Accessory				X

Standard Unit Features

- Airflow range from 1500 to 6000 cfm
- 2-inch double-wall, R-13 construction (including unit roof)
- Outdoor air inlet hood
- Prepainted exterior finish
- Air-cooled DX refrigeration system
- Completely factory-piped and leak-tested refrigeration system
- Stainless steel drain pan
- Scroll compressors with crankcase heaters
- Single-point power connections for units with optional total-energy wheel, powered exhaust, and electric heat
- Filter rack adjustable for 2 or 4-inch filters
- Manual outdoor air damper
- High-efficiency fan motors
- Variable frequency drive (VFD)
- Neoprene vibration isolation under supply and exhaust fan base and compressors
- Low and high pressure cutouts
- Easy Access Low Voltage Terminal Board
- Pleated media filters 2-inch MERV-8
- Direct drive BI plenum fan
- Fan failure switch

Standard Control Features

- Fully integrated, factory-installed and commissioned microelectronic controls
- Emergency stop for safety interlock
- Occupied/unoccupied control modes

Optional Features

- Modulating damper control systems
- Clogged filter
- Pleated media filters MERV-13, 14
- Adjustable powered exhaust
- Exhaust gravity dampers
- Non-fused and Fused disconnect switch
- Integral total-energy wheel
- Protective coatings (cathodic epoxy type electro disposition) for the coils
- Factory wired convenience outlet
- Hailguards
- LED service lights
- Digital, Staged and Variable/eflex scroll compressors
- Unit mounted human interface panel- (7-inch color touchscreen)
- Compressor sound blankets
- Condensate overflow switch
- 65 kA SCCR rating
- Staged electric heater
- Dehumidification (Hot Gas Reheat)
- Modulating gas heat with 10:1 turn down ratio

Note: *Modulating gas heat units are equipped with a stainless-steel heat exchanger as optional and On-off gas heat are equipped with aluminized heat exchanger as standard.*

- Single-zone VAV control
- Frostat
- Indoor and power exhaust Fan Motor Shaft Grounding Ring
- Humidity Sensor
- Roof Curbs
- Class 1A, ultra-low leak parallel blade outdoor/return air damper with edge seals
- Type 439 stainless steel or Aluminized heat exchanger

Other Features and Benefits

Indoor Air Quality (IAQ) Features

- Stainless steel drain pan sloped to ensure proper drainage and reduce the potential for microbial growth
- Double-wall foamed panel construction throughout the indoor section of unit to provide, non-porous, cleanable interior surfaces
- High efficiency throwaway filter option with standard 2-inch or 4-inch adjustable filter rack
- Piezometer airflow measurement option
- Easy filter access encourages frequent changing
- Refrigerant hot gas reheat for low dewpoint supply air for superior humidity control

Energy Efficiency

- Total energy wheel option for recovered energy from centralized building exhaust
- Optional modulating recovered refrigerant reheat for unit supply air

High Quality and Durability

- Robust unit construction with 2-inch double wall panels with foam insulation for an R-value of 13
- Hinged access doors
- High quality, long-lasting latches and hinges for all access doors
- Protective standard prepainted finish on cabinet exterior with optional stainless steel interior and eco-coated coils

Advanced Controls

- All controls are factory-engineered, mounted, configured and tested to minimize field startup time
- UC600 BACnet® microprocessor control
- Human interface with touch-pad screen for monitoring, setting, editing and controlling
- Capable of supply-air control or zone control of both temperature and relative humidity
- Occupied and unoccupied control sequences
- Optional remote human interface for ease of control access without going outdoors

Flexibility

- Numerous heater options and temperature rise capabilities available
- Multiple roof curb options (1-inch or 2-inch. vibration isolation, multiple heights) and seismic certification
- Indirect fired gas heat, primary electric heat and secondary electric preheat option

Enhanced Serviceability

- Hinged access doors for ease of maintenance and service
- Easy-open door latches
- Slide out access direct-drive plenum fan
- Optional slide out, total-energy wheel
- Optional control display

Rigorous Testing

All of Mixed Air Unit designs were rigorously rain tested at the factory to ensure water integrity. Each part of the top (either two or three pieces) overlaps in such a way that water cannot leak into the unit. These overlapped edges are gasketed and sealed to ensure superior water integrity.

Actual shipping tests were performed to determine packaging requirements. Units were test shipped around the country to determine the best packaging.

The fin/tube and microchannel coils are leak checked at 500 psig. The completely assembled refrigerant system is leak tested at a minimum of 500 psig with a refrigerant and nitrogen mixture.

All parts are inspected at the point of final assembly. Sub-standard parts are identified and rejected immediately. Every unit receives a 100% unit run test before leaving the production line to make sure it lives up to rigorous Trane requirements.

Application Considerations

Application of this product should be within the cataloged airflow and cooling considerations.

Clearance Requirements

The recommended clearances identified with unit dimensions should be maintained to ensure adequate serviceability, maximum capacity and peak operating efficiency. Actual clearances which appear inadequate should be reviewed with local Trane sales personnel.

Eco coated Coil

The cathodic epoxy type electrodisposition coating is formulated for high edge build to a number of different types of heat exchangers. The coating is selected to provide excellent resistance and durability to corrosive effects of alkalies, acids, alcohols, petroleum, seawater, salt air, and corrosive environments. This coating shall be available on all heat exchanger coils.

Condensate Trap

The evaporator is a draw-through configuration. A trap must be field provided prior to start-up on the cooling cycle.

Dual Compressors — 5 Stages of Cooling (10 – 15 Tons)

Using the UC 600 microprocessor controls, the Mixed Air Unit high efficiency line can provide five stages of cooling, allowing for a more efficient and comfortable cooling operation.

Heating Operation

The stainless steel heat exchanger is modulating. The aluminized heat exchanger is two-stage operation.

Optional Stainless Steel Heat Exchanger

The optional stainless steel heat exchanger is manufactured with 439 stainless steel.

Unit Pitch

These units have sloped-condensate drain pan. Units must be installed level.

Low Airflow

Unit applications designed for airflow below 320 cfm/ton are available on cooling only units and gas heat units equipped with modulating gas heat. Two stage gas and electric heat is restricted below 320 cfm/ton.

Model Number Descriptions

Digit 1, 2 — Unit Type
HA

Digit 3 — Cabinet Size
E = 1500-6000

Digit 4 — Major Design Sequence
A = Revision 1

Digit 5, 6, 7 — Normal Gross Cooling Capacity (MBh)
010 = 10 Tons High Efficiency
012 = 12 Tons High Efficiency
015 = 15 Tons High Efficiency

Digit 8 — Airflow Configuration
A = Vertical Discharge/No Return
C = Vertical Discharge/Vertical Return

Digit 9 — Voltage Selection
1 = 208/60/3
2 = 230/60/3
3 = 460/60/3
4 = 575/60/3

Digit 10 — Not Used

Digit 11 — Indoor Coil Type
C = DX 4-Row

Digit 12 — Reheat
0 = No Reheat
A = Fin and Tube Modulating HGRH

Digit 13 — Compressor
B = Digital Scroll (1st Circuit Only)
D = eFlexTM (1st Circuit Only)
G = Two-Stage Scroll Compressors

Digit 14 — Outdoor Coil
2 = Air Cooled Microchannel

Digit 15 — Refrigerant Capacity Control
0 = None

Digit 16 — Heat Type (Primary)
0 = No Heat
A = Indirect Fired NG (IF) - Standard Efficiency (80%)-439 SS
D = Indirect Fired LP (IF) - Standard Efficiency (80%)-439 SS
H = Electric - Staged
L = Indirect Fired NG (IF) - High Efficiency (81%)-ALZ
M = Indirect Fired LP (IF) - High Efficiency (81%)-ALZ

Digit 17 — Gas Heat Capacity—Primary
0 = No Gas Heat
F = 200 MBh
H = 300 MBh
K = 400 MBh

Digit 18 — Heat Type - Secondary
0 = No Secondary Heat
4 = Electric - Staged

Digit 19 — Heat Capacity—Secondary
0 = No Secondary Heat
B = 10 kW (8kW @208V)
D = 20 kW (16kW @208V)
F = 28 kW (23 @208V)
S = 38 kW (31 @208V)

Digit 20 — Not Used

Digit 21 — Supply Fan Motor
A = 1 hp—1800 rpm
B = 1 hp—3600 rpm
C = 1.5 hp—1800 rpm
D = 1.5 hp—3600 rpm
E = 2 hp—1800 rpm
F = 2 hp—3600 rpm
G = 3 hp—1800 rpm
H = 3 hp—3600 rpm
J = 5 hp—1800 rpm
K = 5 hp—3600 rpm
L = 7.5 hp—1800 rpm
M = 7.5 hp—3600 rpm
N = 10 hp—1800 rpm
P = 10 hp—3600 rpm

Digit 22 — Supply Fan Motor Type
1 = Direct Drive with VFD
3 = Direct Drive with Shaft Grounding Ring with VFD

Digit 23, 24 — Supply Fan Wheel Diameter
AC = 14 in. wheel
AG = 18 in. wheel
AL = 22 in. wheel

Digit 25 — Exhaust Fan Motor
0 = No Powered Exhaust
A = 1 hp—1800 rpm
B = 1 hp—3600 rpm
C = 1.5 hp—1800 rpm
D = 1.5 hp—3600 rpm
E = 2 hp—1800 rpm
F = 2 hp—3600 rpm
G = 3 hp—1800 rpm
H = 3 hp—3600 rpm
J = 5 hp—1800 rpm
K = 5 hp—3600 rpm
L = 7.5 hp—1800 rpm
M = 7.5 hp—3600 rpm

Digit 26 — Exhaust Fan Motor Type
0 = No Powered Exhaust
1 = Direct Drive with VFD
3 = Direct Drive with Shaft Grounding Ring with VFD

Digit 27, 28 — Exhaust Fan Wheel Diameter
00 = No Powered Exhaust
AC = 14 in. wheel
AG = 18 in. wheel

Digit 29 — Air Flow Monitoring
0 = No Piezo Ring
1 = Supply Fan Piezo Ring
2 = Exhaust Fan Piezo Ring
3 = Supply Fan Piezo Ring and Exhaust Fan Piezo Ring

Digit 30 — Not Used

Digit 31 — Unit Controls
1 = Trane Space Control
2 = Trane Discharge Air Control
3 = Trane Multi-Zone VAV
4 = Trane Single-Zone VAV

Digit 32 — Building Interface
1 = BACnet®

Digit 33 — Filter Options
A = MERV-8, 30%- With Filter Status Switch
B = MERV-13, 80% With Filter Status Switch
C = MERV-14, 95% With Filter Status Switch
D = MERV-8 30%, MERV-13 80% With Filter Status Switch
F = MERV-8, 30% Without Filter Status Switch
G = MERV-13, 80% Without Filter Status Switch
H = MERV-14, 95% Without Filter Status Switch
J = MERV-8 30%, MERV-13 80% Without Filter Status Switch

Digit 34 — Energy Recovery
0 = No Energy Recovery
1 = ERV-Composite Construction with Bypass for Frost Protection
2 = ERV-Composite Construction with Frost Protection with VFD
3 = ERV-Aluminum Construction with Bypass for Frost Protection
4 = ERV-Aluminum Construction with Frost Protection with VFD

Digit 35 — Energy Recovery Option, Purge
0 = No Purge
1 = Purge

Digit 36 — Energy Recovery Wheel Size
0 = No ERV
A = 3014
B = 3622
C = 4136
D = 4634

Digit 37 — Energy Recovery Option, Rotation Sensor

0 = No Rotation Sensor

Digit 38 — Damper Options

3 = Modulating OA and RA Dampers with Economizer
5 = Manual OA Damper

Digit 39 — Exhaust Dampers

0 = No Exhaust Dampers
A = Gravity Dampers

Digit 40 — Not Used

Digit 41— Electrical Options

0 = Terminal Block - No Factory installed disconnect
A = Non-Fused Disconnect
B = Fused Disconnect Switch
C = 65 SCCR Electrical Rating with Non-Fused Disconnect
D = 65 SCCR Electrical Rating with Fused Disconnect
E = 65 KAIC Electrical Rating with Non-Fused Disconnect
F = 65 KAIC Electrical Rating with Fused Disconnect

Digit 42 — Corrosive Environment Package

0 = No Corrosive Package
A = Eco Coated Coils
C = S/S Coil Casing

Digit 43 — Outdoor Air Monitoring

0 = No Outdoor Air Monitoring

Digit 44 — Condenser Fan Options

A = Standard Condenser Fan

Digit 45 — Compressor Sound Blankets and Sound Attenuation

0 = No Sound Attenuation Package
A = Compressor Sound Blankets

Digit 46 — Smoke Detector - Field Installed

0 = No Smoke Detector
4 = Supply Smoke Detector
5 = Return Smoke Detector
6 = Supply and Return Smoke Detector

Digit 47 — Hailguards

0 = No Hailguards
A = Hailguards

Digit 48 — Service Lights

0 = No Service Lights
A = Supply Fan Section Service Light
B = Exhaust Fan Section Service Light
C = Supply and Exhaust Fan Section Service Light

Digit 49 — UV Lights

0 = No UV lights

Digit 50 — Not Used

Digit 51 — Unit Installation Location

A = Outdoor

Digit 52 — Convenience Outlet

0 = No Convenience Outlet
A = Convenience Outlet

Digit 53 — Controls Display

0 = No Display
1 = TD7 Factory Installed
2 = TD7 Remote Mounted

Digit 54 — Cooling Controls

0 = Standard Control

Digit 55 — Face and Bypass on Indoor Coil

0 = No Face and Bypass

Digit 56 — Thermostat

0 = No Thermostat
1 = Thumbwheel Thermostat

Digit 57 — Altitude

0 = Sea Level to 1,000 feet
1 = 1,001 to 2,000 feet
2 = 2,001 to 3,000 feet
3 = 3,001 to 4,000 feet
4 = 4,001 to 5,000 feet
5 = 5,001 to 6,000 feet
6 = 6,001 to 7,000 feet
7 = Above 7,000 feet

Digit 58 — Condensate Overflow Switch

0 = No Condensate Overflow Switch
A = Condensate Overflow Switch

Digit 59 — Frostat

0 = No Frostat

Digit 60 — Not Used

Digit 61 — Outdoor Coil Fluid Type

0 = None

Digit 62 — Minimum Damper Leakage

0 = Standard
1 = Class 1A

Digit 63, 64 — UC 600 Hardware Template

00 = Prior To Hardware Template

Digit 65 — Electric Heat Capacity—Primary

0 = No Electric Heat
E = 24 kW (19.6kW @208V)
J = 48 kW (39kW@208V)
L = 68 kW (55.6kW@208V)
N = 99 kW (81kW@208V)

Digit 66 — Hot Water Coil Design - Primary

0 = No Hot Water Heat

Digit 67— Gas Heat Cap - Secondary

0 = No Secondary Gas Heat

Digit 68,69 — Reserved for Future Use

General Data

Table 3. General data-cooling 10-15 tons standard efficiency

	10 Tons Downflow	12 Tons Downflow Units	15 Tons Downflow Units
Cooling Performance [a] Staged Compressor (4 ROW)			
Gross Cooling Capacity (No Heat - Electric Heat / Gas Heat)	119,000/119,000	148,000/146,000	181,000/179,000
EER[b] (No Heat - Electric Heat / Gas Heat)	11.2/11.0	11.0/10.8	11.0/10.8
Nominal Airflow CFM / AHRI Rated CFM	4000 / 3200	4800 / 3840	6000 / 4800
AHRI Net Cooling Capacity (No Heat - Electric Heat / Gas Heat)	112,000/112,000	142,000/140,000	176,000/174,000
Integrated Energy Efficiency Ratio (IEER)[c] (No Heat - Electric Heat / Gas Heat)	12.9/12.7	12.4/12.2	12.4/12.2
Compressor Number/Type	2 / Scroll	2 / Scroll	2 / Scroll
Cooling Performance[a] Digital Scroll Compressor (4 ROW)			
Gross Cooling Capacity (No Heat - Electric Heat / Gas Heat)	117,000/116,000	150,000/150,000	178,000/180,000
EER[b] (No Heat - Electric Heat / Gas Heat)	11.2/11.0	11.0/10.8	11.0/10.8
Nominal Airflow CFM / AHRI Rated CFM	4000 / 3200	4800 / 3840	6000 / 4800
AHRI Net Cooling Capacity (No Heat - Electric Heat / Gas Heat)	110,000/108,000	140,000/140,000	174,000/176,000
Integrated Energy Efficiency Ratio (IEER)[c] (No Heat - Electric Heat / Gas Heat)	12.9/12.7	12.4/12.2	12.4/12.2
Compressor Number/Type	2 / Scroll	2 / Scroll	2 / Scroll
Cooling Performance[a] Variable Speed Compressor (4 ROW)			
Gross Cooling Capacity (No Heat - Electric Heat / Gas Heat)	120,000/120,000	150,000/150,000	180,000/182,000
EER[b] (No Heat - Electric Heat / Gas Heat)	11.2/11.0	11.0/10.8	11.0/10.8
Nominal Airflow CFM / AHRI Rated CFM	4000 / 3200	4800 / 3840	6000 / 4800
AHRI Net Cooling Capacity (No Heat - Electric Heat / Gas Heat)	112,000/112,000	140,000/140,000	176,000/178,000
Integrated Energy Efficiency Ratio (IEER)[c] (No Heat - Electric Heat / Gas Heat)	12.9/12.7	12.4/12.2	12.4/12.2
Compressor Number/Type	1 / Scroll	1 / Scroll	1 / Scroll
Outdoor Coil			
Type	Microchannel	Microchannel	Microchannel
Coil Width (in.)	1.90	1.90	1.90
Face Area (sq. ft.)	28.36	28.36	28.36
Rows/FPI	1/24	1/24	1/24
Indoor Coil			
Type	Fin and Tube	Fin and Tube	Fin and Tube
Coil Width (in.)	5.83	5.83	5.83
Face Area (sq. ft.)	13.64	13.64	13.64

Table 3. General data-cooling 10-15 tons standard efficiency (continued)

	10 Tons Downflow	12 Tons Downflow Units	15 Tons Downflow Units
Rows/FPI	4/14	4/14	4/14
Refrigerant Control	TXV	TXV	TXV
Drain Connection Number/Size (in.)	1/1.00 NPT	1/1.00 NPT	1/1.00 NPT
Outdoor Fan			
Type	Propeller	Propeller	Propeller
Number Used/Diameter (in.)	2/ 30	2/ 30	2/ 30
Drive Type/No. Speeds	Direct / 1	Direct / 1	Direct / 1
cfm	17,270	17,270	17,270
Number Motors/hp	2 / 1.0	2 / 1.0	2 / 1.0
Motor rpm	1,140	1,140	1,140
Indoor Fan			
Type	BI	BI	BI
Number Used/Diameter (in.)	1/(14-22)	1/(14-22)	1/(14-22)
Drive Type/No. Speeds	Direct Drive with VFD	Direct Drive with VFD	Direct Drive with VFD
Filters			
Type[d]	MERV8	MERV8	MERV8
Number Size Recommended	(2) 20x24x2 (2) 24x24x2	(2) 20x24x2 (2) 24x24x2	(2) 20x24x2 (2) 24x24x2
Refrigerant Charge[e]			
Staged Scroll	16lbs. 2oz.	17lbs. 2oz.	19lbs. 0 oz.
Digital Scroll	15lbs. 11oz.	17lbs. 8oz.	17 lbs
Variable Speed	15 lbs	16 lbs	17 lbs

(a) Cooling Performance is rated at 95°F ambient, 80°F entering dry bulb, 67°F entering wet bulb. Gross capacity does not include the effect of fan motor heat. AHRI capacity is net and includes the effect of fan motor heat. Certified in accordance with the Unitary Large Equipment Certification Program, which is based on AHRI Standard 340/360.
(b) EER is rated at AHRI conditions and in accordance with AHRI Standard 340/360.
(c) Integrated Energy Efficiency Ratio (IEER) is rated in accordance with AHRI standard 340/360.
(d) MERV 13, MERV 14, and MERV 8 & 13 are selectable options.
(e) Base charge increased by 3lbs. for units selected with hot gas reheat.

Table 4. Mixed air unit filters

	Thickness	MERV	Qty	Height	Width
Evaporator	2	8, 13	2	20	24
	2	8, 13	2	24	24
	4	14	2	20	24
	4	14	2	24	24
ERV Module	**Return Air**				
	Thickness	**MERV**	**Qty**	**Height**	**Width**
	2	8	4	18	24
	Outside Air				
	Thickness	**MERV**	**Qty**	**Height**	**Width**
	2	8	4	18	24

Table 4. Mixed air unit filters (continued)

Filter Inlet Hood	**Thickness**	**Material**	**Qty**	**Height**	**Width**
	2	Aluminum Mesh	4	16	25
	Thickness	**MERV**	**Qty**	**Height**	**Width**
	2	8	4	16	25

Note: *Filter inlet hood is only provided on units with electric preheater. Bird screen installed in non preheater units.*

Table 5. General data—heating—10-15 tons

Tube Material	**Total**	**Total**	**Stage 1**		**Stage 2**		
	Heating Input MBh	**Heating Output MBh**	**Heating Input MBh**	**Heating Output MBh**	**Heating Input MBh**	**Heating Output MBh**	**Steady State Efficiency%**
Aluminized	200	162	110	89	200	162	81
	300	243	165	134	300	243	81
	400	324	220	178	400	324	81

Table 6. General data—heating—stainless steel

Tube Material	**Total**	**Total**	**Modulating Turn Down = 10:1**		**Steady State Efficiency%**
	Heating Input MBh	**Heating Output MBh**	**Min Input**	**Min Output**	
Stainless Steel	200	160	20	16	80
	300	240	30	24	80
	400	320	40	32	80

Notes:

- *Minimum/maximum inlet pressure = 5-inch wc/13.5-inch wc (1.2 kpa/3.3 kpa) for natural gas and 10-inch wc/14-inch wc (2.5 kpa/3.5 kpa) for propane.*
- *Gas connections for all aluminized burner and 400 MBh stainless steel is 3/4-inch and 200-300 MBh stainless steel burners is 1/2-inch.*
- *Heating Performance limit settings and rating data were established and approved under laboratory test conditions using American National Standards Institute standards. Ratings shown are for elevations up to 3000 feet.*

Table 7. Electric heater voltage correction factors

Nominal Voltage	**Distribution Voltage**	**Capacity Multiplier**
	208	0.75
240	230	0.92
	240	1
	440	0.84
480	460	0.92
	480	1
	540	0.81
600	575	0.92
	600	1

Table 8. Compressor and condenser fan electrical data

Electrical Characteristics												
Tons	Compressor Type	No. of Units	Compressor Motors					Condenser Fan Motors				
			Volts	Phase	rpm	Amps		No.	Phase	hp	Amps	
						RLA (C1/C2)	LRA(C1/C2)				FLA	LRA
10	2 Stage	2	230	3	3500	25/15.6	149/83.1	2	3	1	4.2	21
	2 Stage	2	460	3	3500	11.8/7.1	75/41	2	3	1	2.1	10.5
	2 Stage	2	575	3	3500	8.6/5.1	54/33	2	3	1	1.7	10.5
	Digital Scroll	2	230	3	3500	21.9/17.9	136/110	2	3	1	4.2	21
	Digital Scroll	2	460	3	3500	11.4/8.6	83/52	2	3	1	2.1	10.5
	Digital Scroll	2	575	3	3500	7.4/5.6	55.3/33	2	3	1	1.7	10.5
	eFlexTM (VS)	1	230	3	5400	50.4	90.2	2	3	1	4.2	21
	eFlexTM (VS)	1	460	3	5400	24.5	48.2	2	3	1	2.1	10.5
	eFlexTM (VS)	1	575	3	5400	26.3	42	2	3	1	1.7	10.5
12	2 Stage	2	230	3	3500	27.9/18.4	164/110	2	3	1	4.2	21
	2 Stage	2	460	3	3500	13.6/8.1	100/52	2	3	1	2.1	10.5
	2 Stage	2	575	3	3500	10/6.1	78/38.9	2	3	1	1.7	10.5
	Digital Scroll	2	230	3	3500	25.9/21.2	164/123	2	3	1	4.2	21
	Digital Scroll	2	460	3	3500	12.5/10.9	75/62	2	3	1	2.1	10.5
	Digital Scroll	2	575	3	3500	8.8/8.3	54/50	2	3	1	1.7	10.5
	eFlexTM (VS)	1	230	3	5400	50.4	90.2	2	3	1	4.2	21
	eFlexTM (VS)	1	460	3	5400	24.5	48.2	2	3	1	2.1	10.5
	eFlexTM (VS)	1	575	3	5400	26.3	42	2	3	1	1.7	10.5
15	2 Stage	2	230	3	3500	31.4/19.6	240/136	2	3	1	4.2	21
	2 Stage	2	460	3	3500	16.4/9.4	130/66.1	2	3	1	2.1	10.5
	2 Stage	2	575	3	3500	12.6/7.1	93.7/55.3	2	3	1	1.7	10.5
	Digital Scroll	2	230	3	3500	27.9/26.8	164/186.6	2	3	1	4.2	21
	Digital Scroll	2	460	3	3500	13.6/14.1	100/100	2	3	1	2.1	10.5
	Digital Scroll	2	575	3	3500	10.7/11	78/78	2	3	1	1.7	10.5
	eFlexTM (VS)	1	230	3	5400	80	116.7	2	3	1	4.2	21
	eFlexTM (VS)	1	460	3	5400	49.9	59.1	2	3	1	2.1	10.5
	eFlexTM (VS)	1	575	3	5400	37.6	66.9	2	3	1	1.7	10.5

Dimensional Data

Figure 1. Mixed air unit 10-15 tons DX primary cabinet multi-view

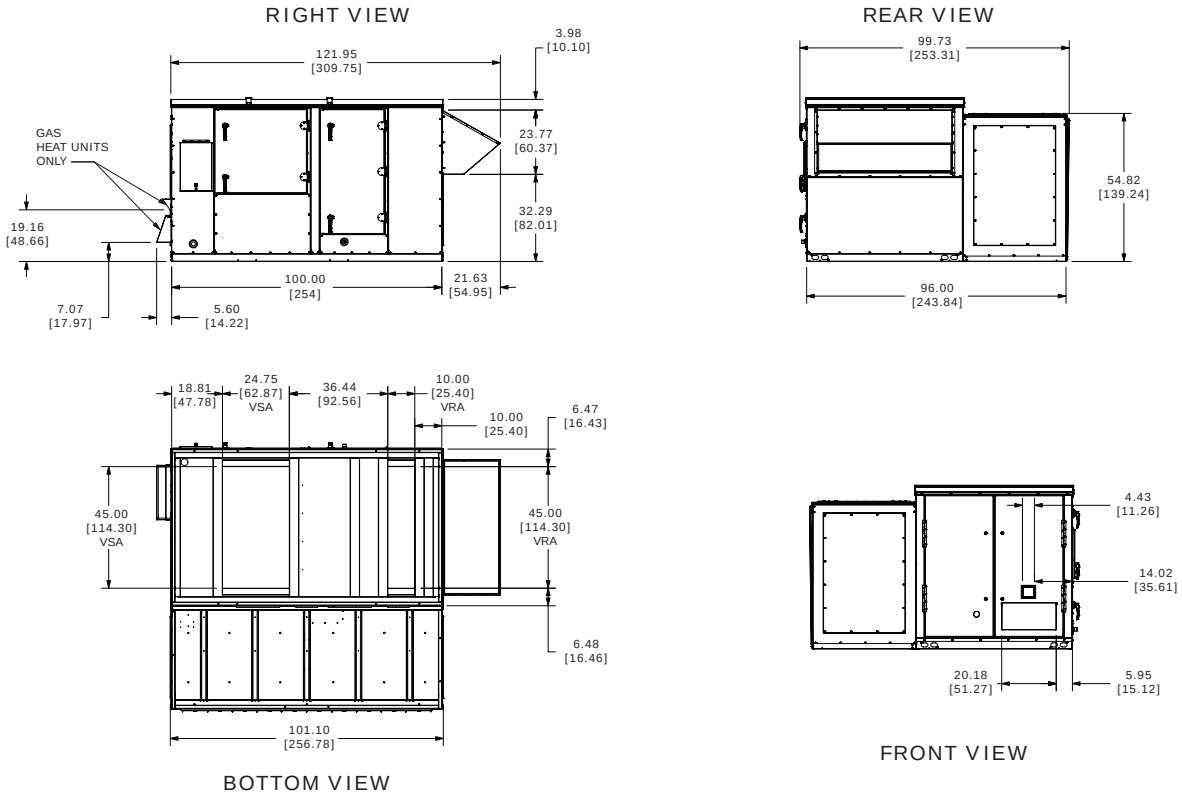

IN.
[CM.]
DIMENSIONS ARE IN INCHES UNLESS OTHERWISE SPECIFIED. DO NOT SCALE DRAWING.

Figure 2. Mixed air unit 10-15 tons DX primary cabinet clearance

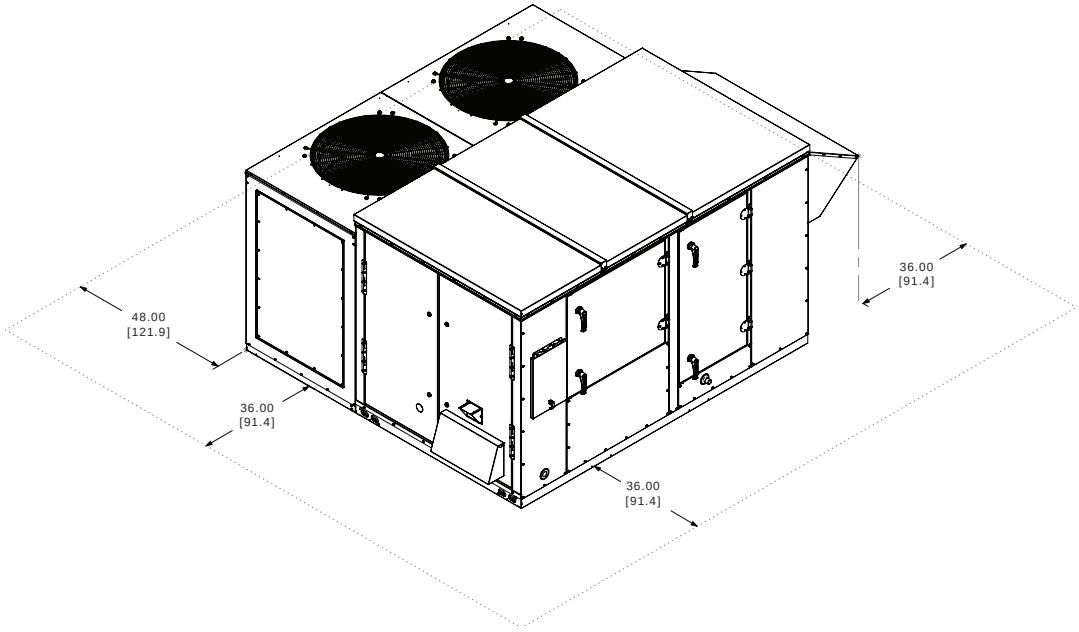

IN.
[CM.]
DIMENSIONS ARE IN INCHES UNLESS OTHERWISE SPECIFIED. DO NOT SCALE DRAWING.

Figure 3. Mixed air unit 10-15 tons DX primary cabinet utility connections

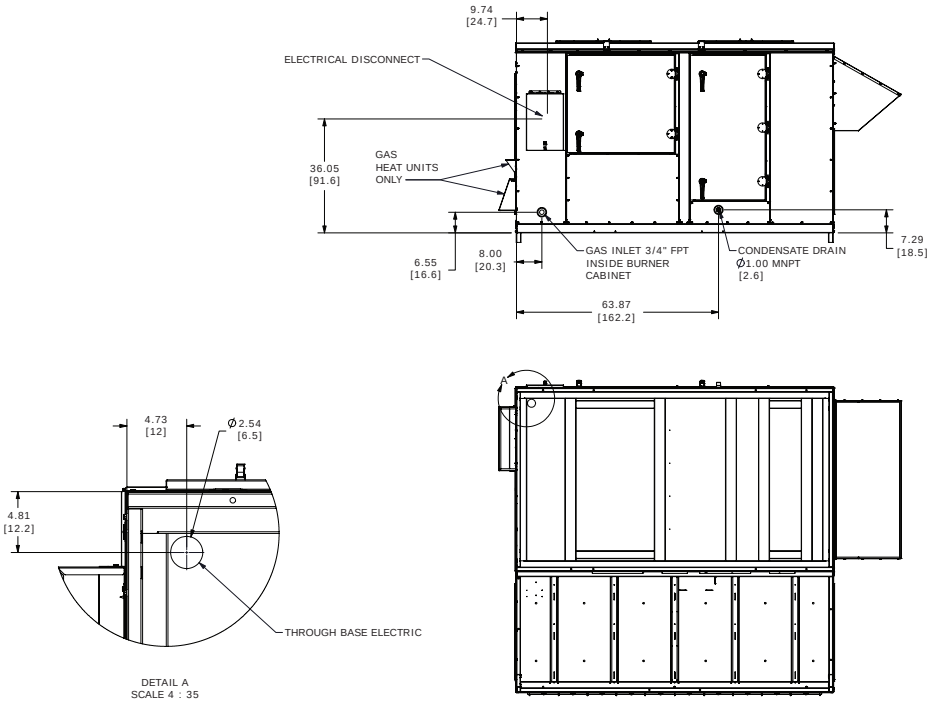

IN.
[CM.]
DIMENSIONS ARE IN INCHES UNLESS OTHERWISE SPECIFIED. DO NOT SCALE DRAWING.

Figure 4. Mixed air unit 10-15 tons DX primary cabinet knockdown curb

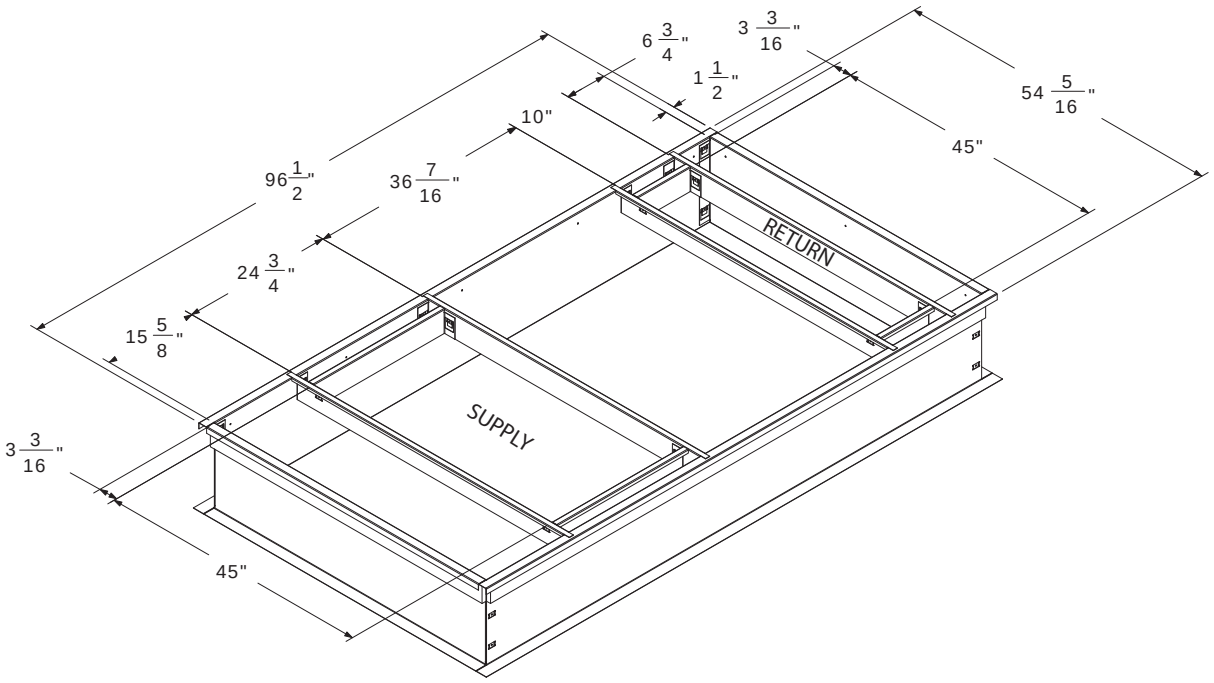

Figure 5. Mixed air unit 10-15 tons DX power exhaust cabinet multi-view

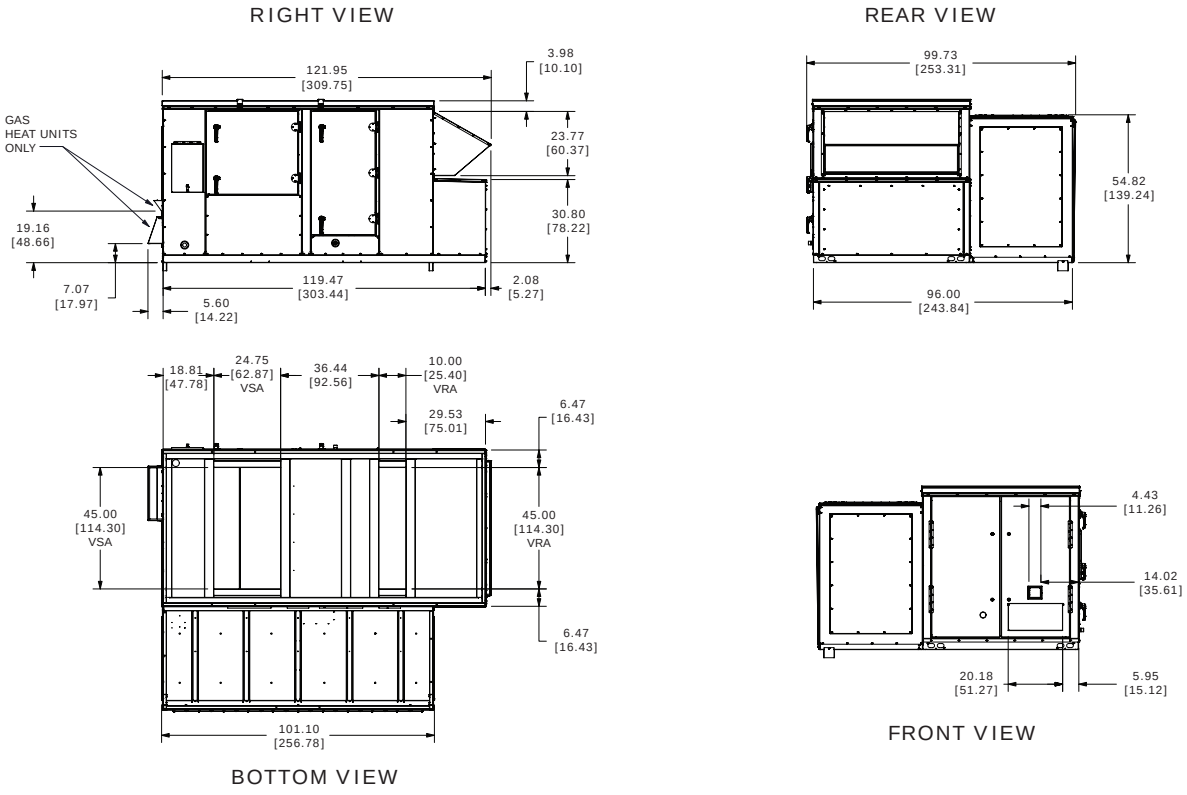

IN.
[CM.]
DIMENSIONS ARE IN INCHES UNLESS OTHERWISE SPECIFIED. DO NOT SCALE DRAWING.

Figure 6. Mixed air unit 10-15 tons DX power exhaust cabinet clearance

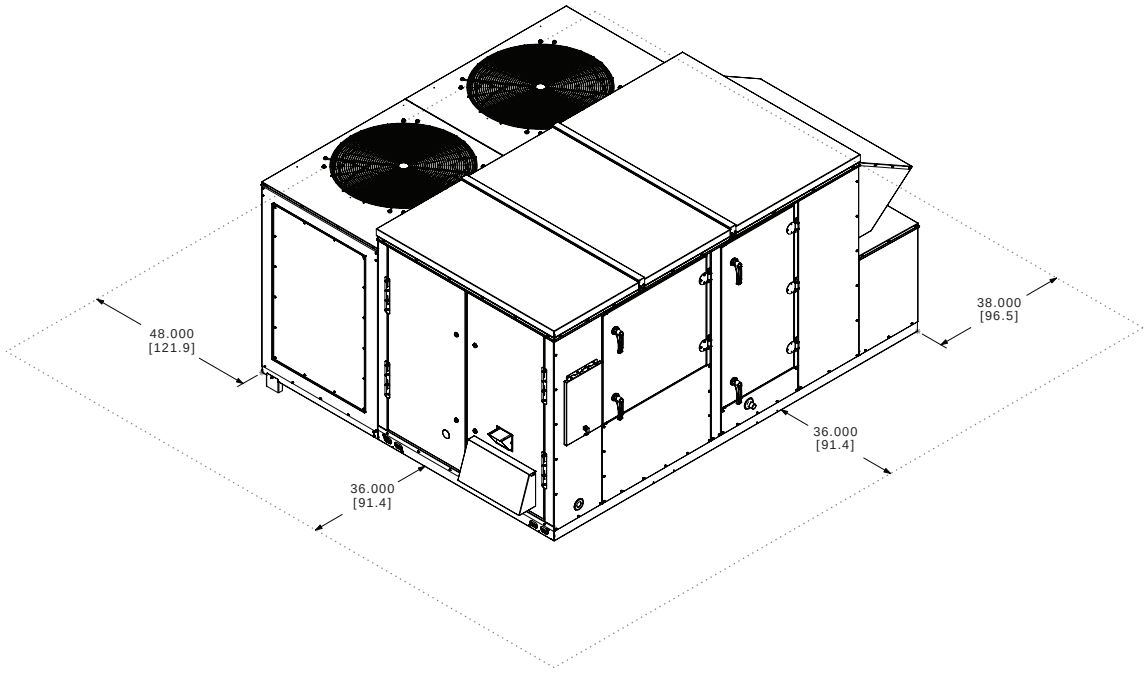

IN.
[CM.]
DIMENSIONS ARE IN INCHES UNLESS OTHERWISE SPECIFIED. DO NOT SCALE DRAWING.

Figure 7. Mixed air unit 10-15 tons DX power exhaust cabinet utility connections

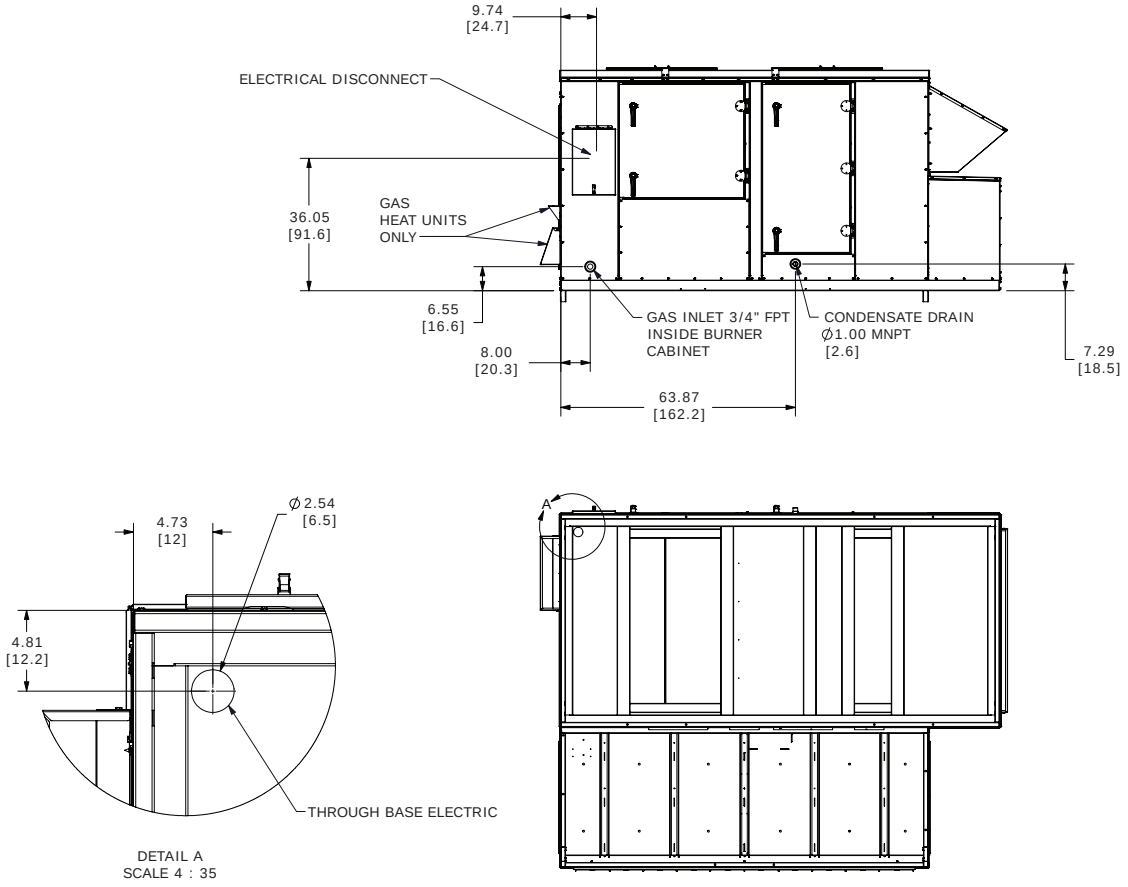

IN.
[CM.]
DIMENSIONS ARE IN INCHES UNLESS OTHERWISE SPECIFIED. DO NOT SCALE DRAWING.

Figure 8. Mixed air unit 10-15 tons DX power exhaust cabinet knockdown curb

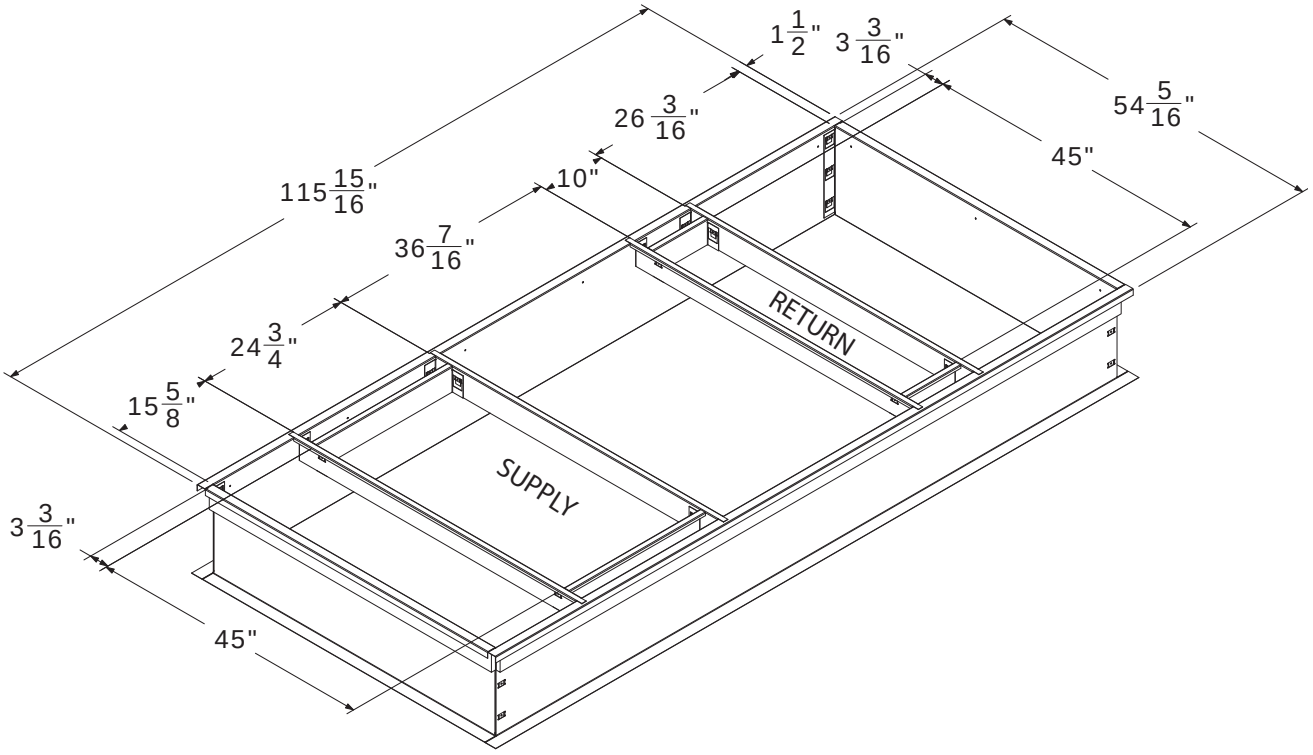

Figure 9. Mixed air unit 10-15 tons DX ERV cabinet with standard inlet multi-view

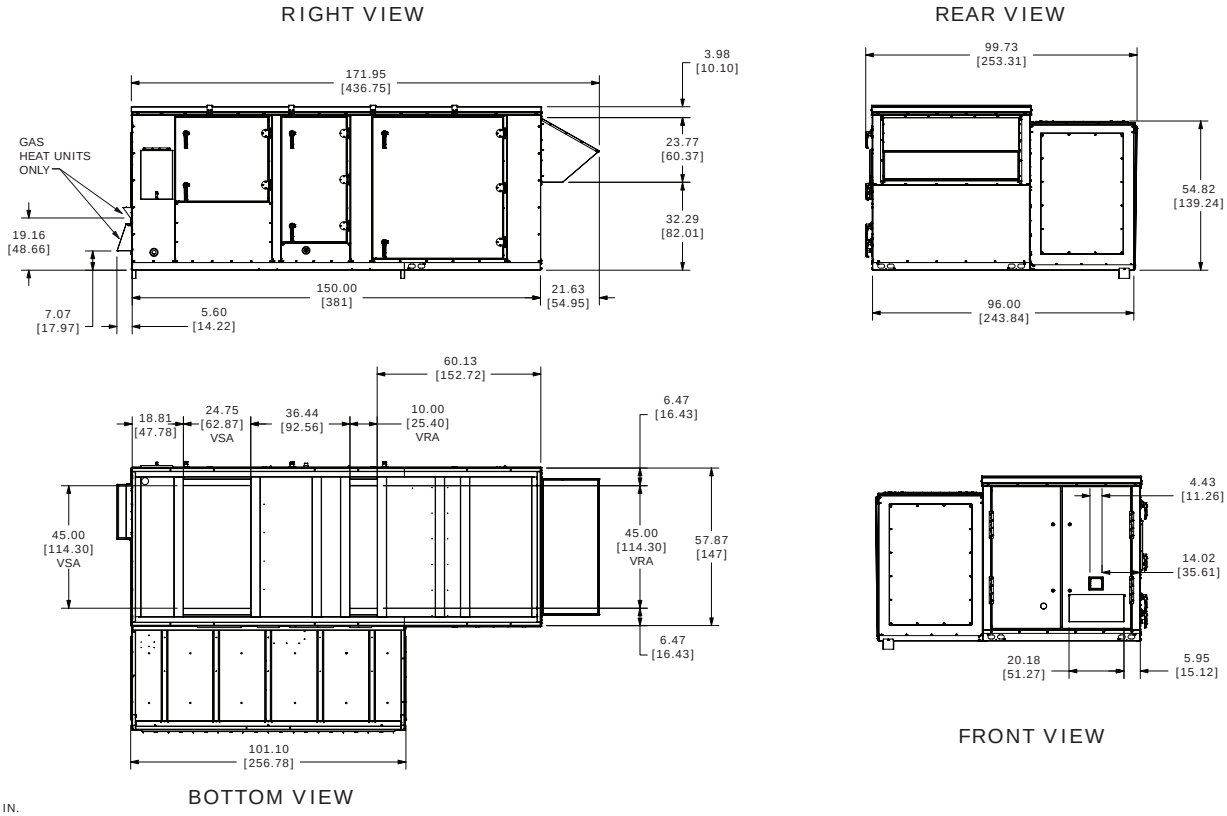

IN.
[CM.]
DIMENSIONS ARE IN INCHES UNLESS OTHERWISE SPECIFIED. DO NOT SCALE DRAWING.

Figure 10. Mixed air unit 10-15 tons DX ERV cabinet with filter inlet multi-view

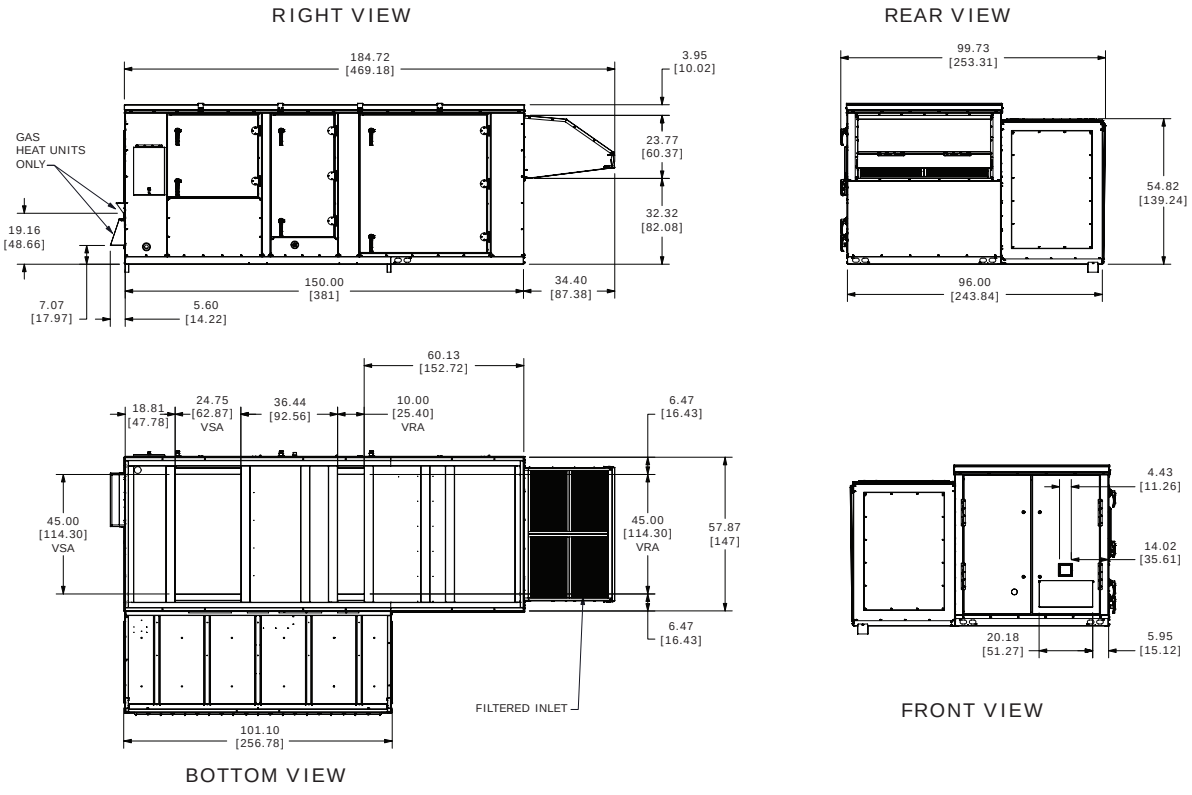

IN.
[CM.]
DIMENSIONS ARE IN INCHES UNLESS OTHERWISE SPECIFIED. DO NOT SCALE DRAWING.

Figure 11. Mixed air unit 10-15 tons DX ERV cabinet with standard inlet clearance

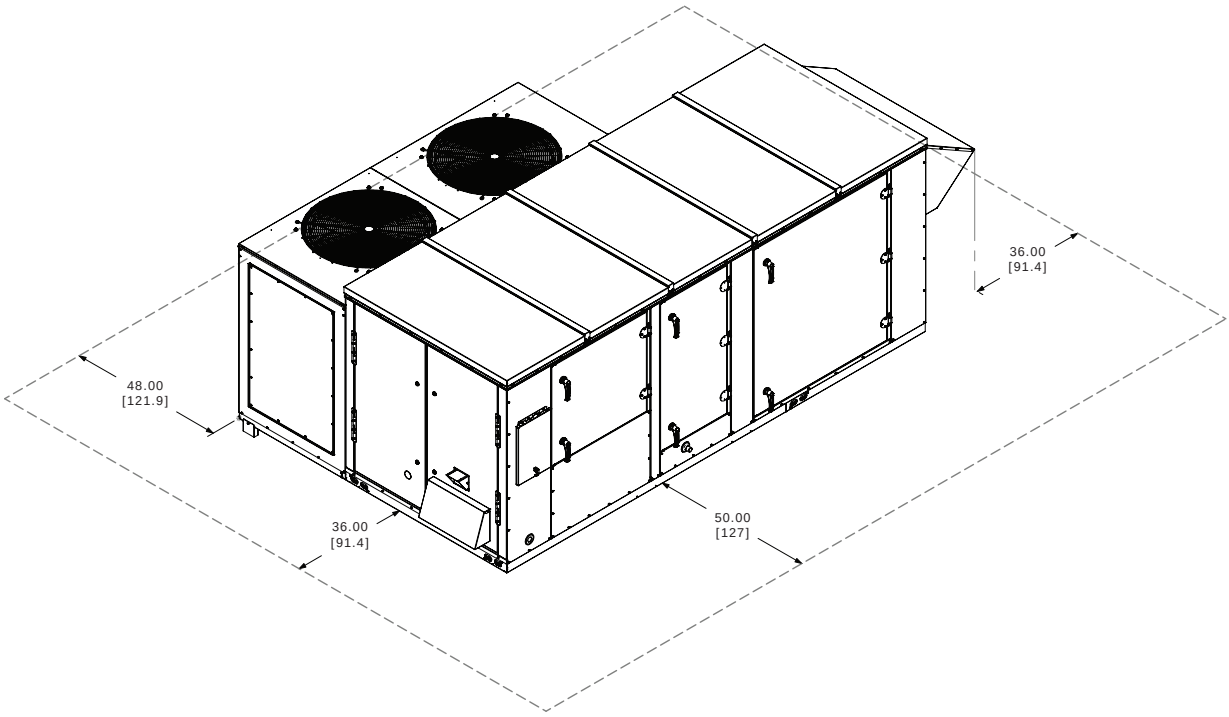

IN.
[CM.]
DIMENSIONS ARE IN INCHES UNLESS OTHERWISE SPECIFIED. DO NOT SCALE DRAWING.

Figure 12. Mixed air unit 10-15 tons DX ERV cabinet with filter inlet clearance

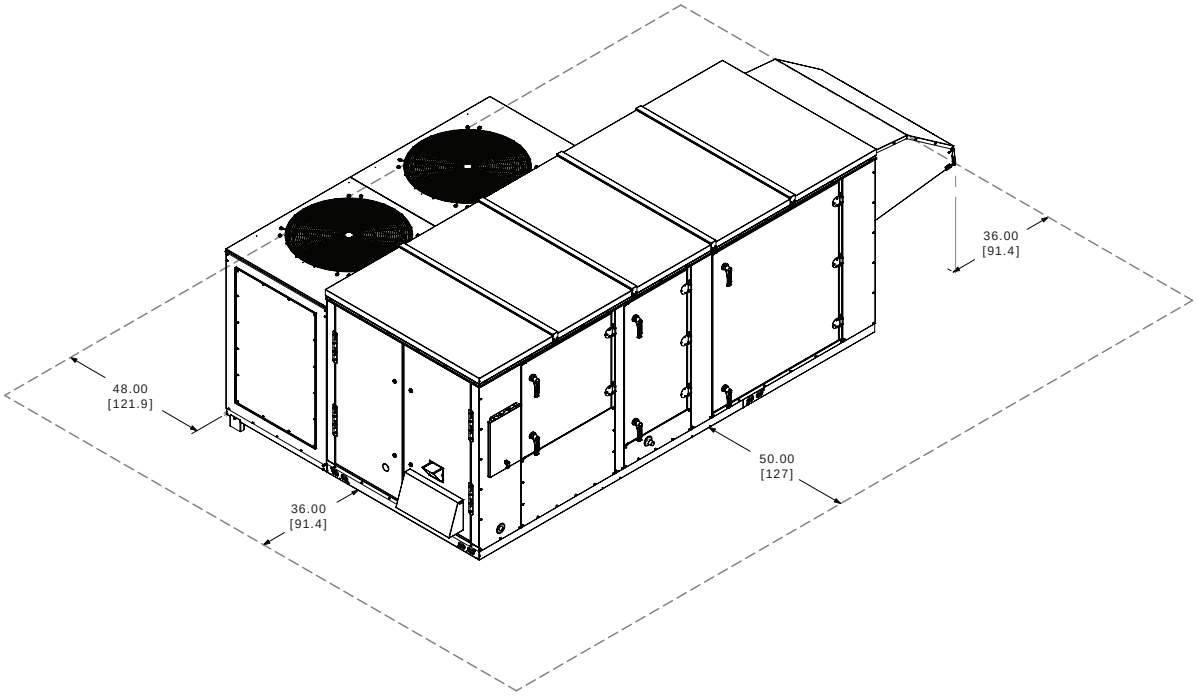

IN.
[CM.]
DIMENSIONS ARE IN INCHES UNLESS OTHERWISE SPECIFIED. DO NOT SCALE DRAWING.

Figure 13. Mixed air unit 10-15 tons DX ERV cabinet with standard inlet utility

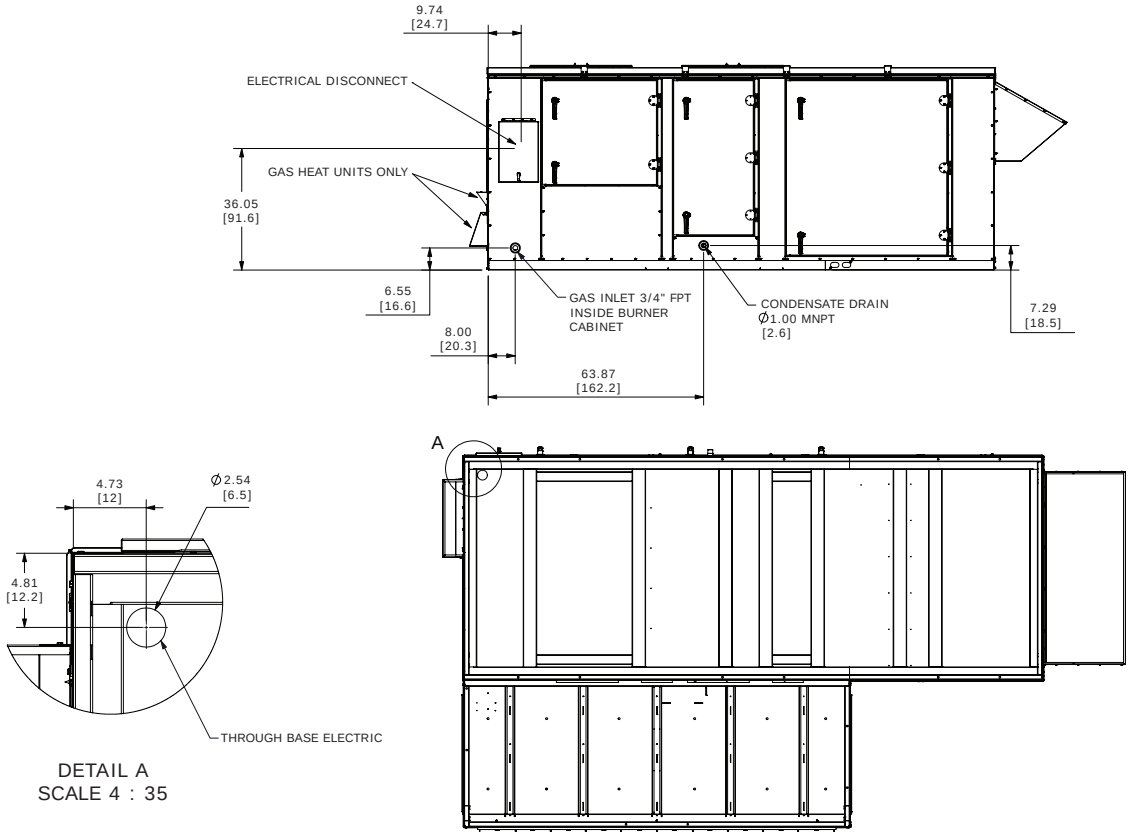

IN.
[CM.]

DIMENSIONS ARE IN INCHES UNLESS OTHERWISE SPECIFIED. DO NOT SCALE DRAWING.

Figure 14. Mixed air unit 10-15 tons DX ERV cabinet with filter inlet utility

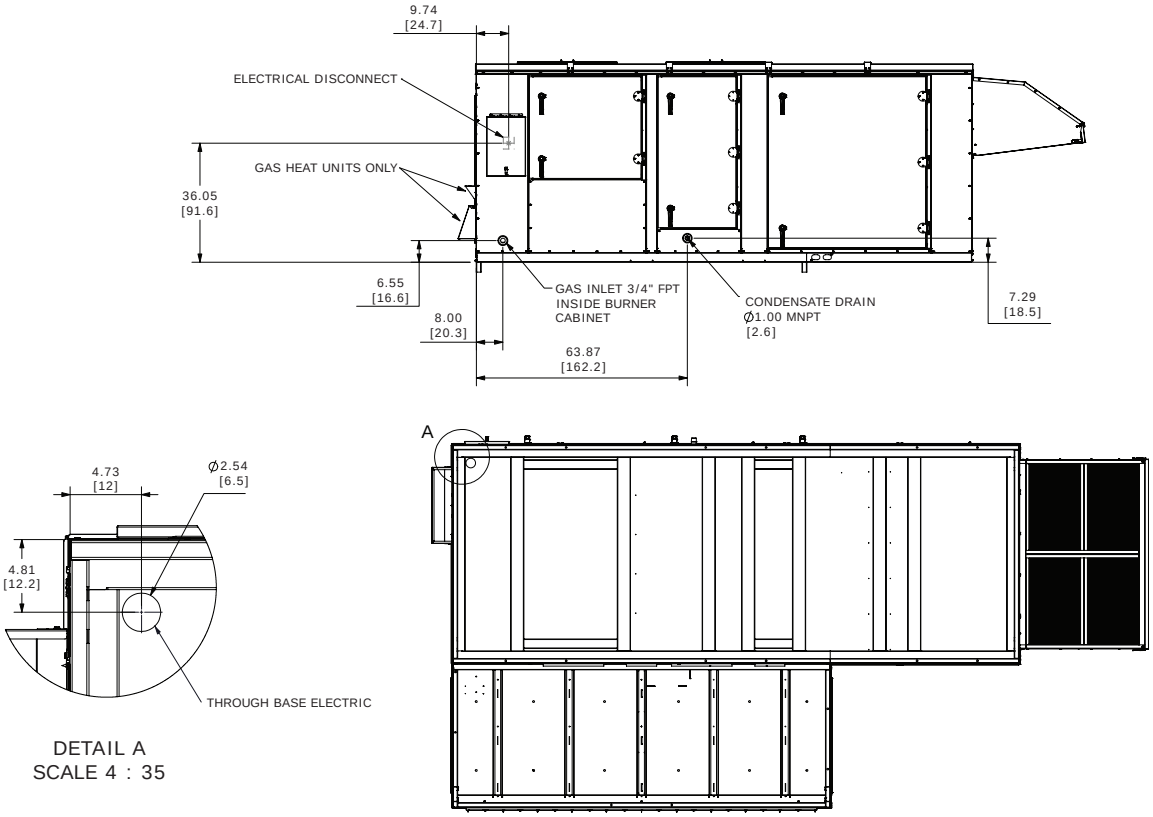

IN.
[CM.]
DIMENSIONS ARE IN INCHES UNLESS OTHERWISE SPECIFIED. DO NOT SCALE DRAWING.

Figure 15. Mixed air unit 10-15 tons DX ERV cabinet knockdown curb

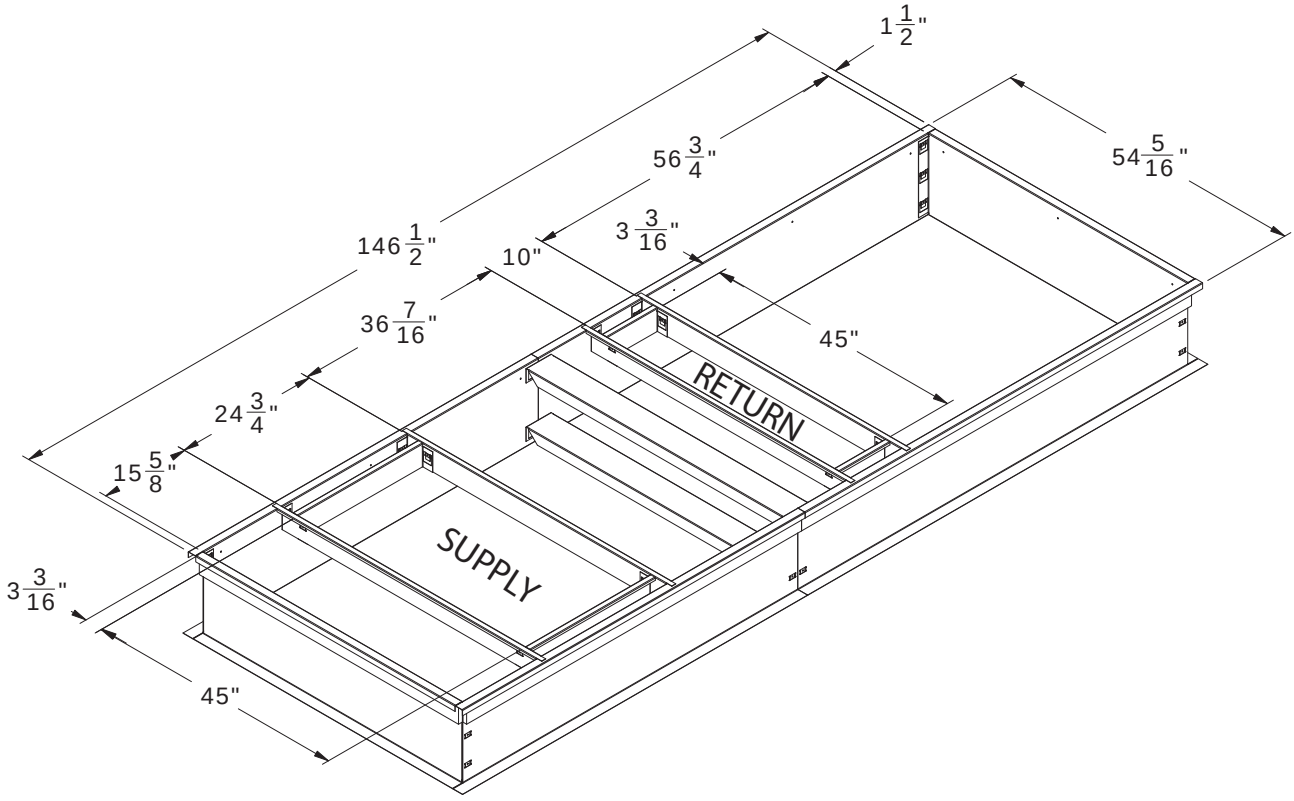

Unit Weights (lb) and Center of Gravity Dimensions (in)

Cabinet Type	Weight (lbs)		COG (inch)		Corner Weight (% of total weight)			
	Min	Max	Length	Width	Corner A	Corner B	Corner C	Corner D
Primary Cabinet	1794	3134	46	43	42	31	15	12
Primary Cabinet with Power Exhaust only	2038	3590	50	41	39	32	11	18
Primary Cabinet with ERV	2501	4391	68	39	35	33	11	21

Figure 16. Corner weight locations - HAE top view

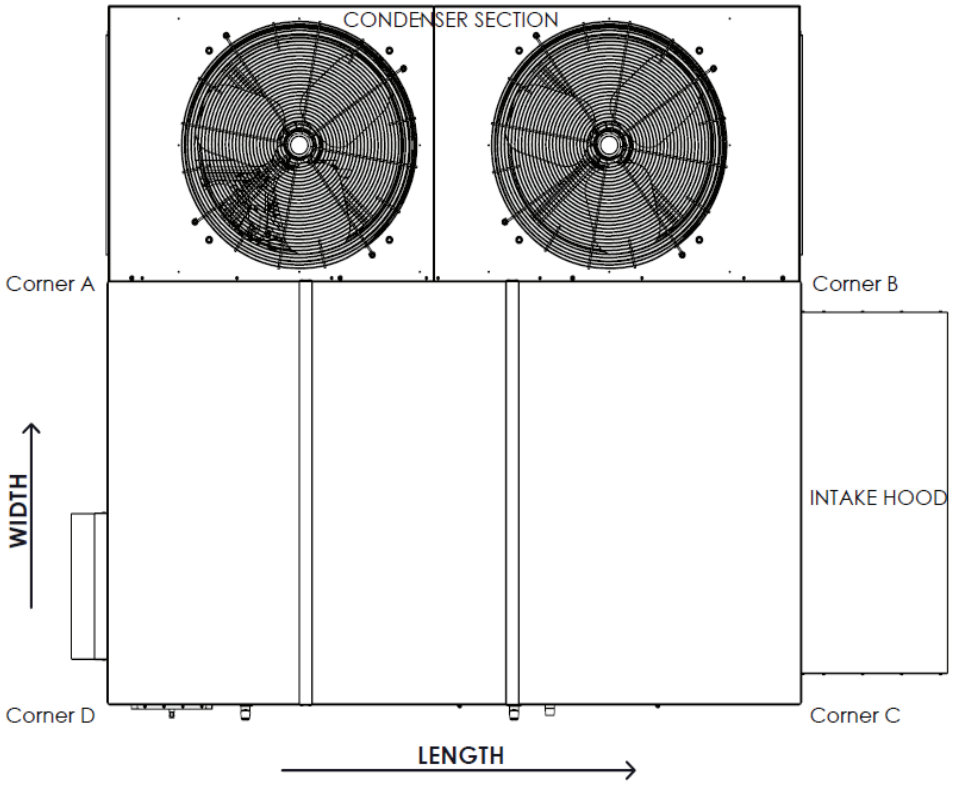

Mechanical Specifications

Mixed Air Unit Mechanical Specifications

General

The supply and return openings shall be available as vertical airflow. Cooling performance shall be rated in accordance with AHRI 340/360/ETL testing procedures. All units shall be factory assembled, internally wired, fully charged with R-410A, and 100 percent run tested to check cooling operation, fan and blower rotation, and control sequence before leaving the factory. Wiring internal to the unit shall be colored and numbered for simplified identification. Units shall be ETL listed and labeled, classified in accordance to UL 1995/CSA C22.2#236 and ANSI Z83.8/CSA 2.6 Central Cooling Air Conditioners and packaged heaters. Canadian units shall be CSA Certified.

Casing

Unit casing will be provided with a thermal break and shall be constructed of galvanized steel. Exterior surfaces shall be cleaned, phosphatized, and finished with a weather-resistant baked enamel finish. Unit's surface shall be tested 672 hours in a salt spray test in compliance with ASTM B117. Unit shall have a 2-inch thick Antimicrobial Insulation with an R-value of 13, including roof panels. All insulation edges shall be either captured or sealed. The ribbed top adds extra strength and enhances water removal from unit top.

Drain Pan

The drain pan is a single-walled assembly made of Type 304 stainless steel. It is sloped in two planes and is fully drainable.The coils are mounted above the drain pan to allow easy inspection and cleaning of the drain pan. The bottom of the drain pan is insulated.

Refrigeration and Dehumidification Systems

Compressors

All units shall have direct-drive, hermetic, scroll type compressors with centrifugal type oil pumps. Motor shall be suction gas-cooled and shall have a voltage utilization range of plus or minus 10 percent of unit nameplate voltage. Internal overloads shall be provided with the scroll compressors. Each compressor has a crankcase heater (or equivalent) to minimize the amount of liquid refrigerant present in the oil sump during off cycles.

Evaporator and Condenser Coils

Internally finned copper tubes mechanically bonded to a configured aluminum plate fin shall be standard for Evaporator. Microchannel coils are standard for Condenser. Coils shall be leak tested at the factory to ensure the pressure integrity. The evaporator coil and condenser coil shall be leak tested to 500 psig and pressure tested to 500 psig. Evaporator coil will have four interlaced rows for superior sensible and latent cooling.

Figure 17. Evaporator coil

Total Energy Wheel (Composite)

The rotating wheel heat exchanger is composed of a rotating cylinder in an insulated cassette frame complete with seals, drive motor, and drive belt. The total-energy recovery wheel is coated with silica gel desiccant permanently bonded by a patented and proprietary process without the use of binders or adhesives, which may degrade desiccant performance.The substrate is a lightweight polymer and will not degrade nor require additional coatings for application in marine or coastal environments. Coated segments are washable with detergent or alkaline coil cleaner and water. Desiccant will not dissolve nor deliquesce in the presence of water or high humidity. As the wheel rotates between the ventilation and exhaust air streams it picks up sensible and latent heat energy and releases it into the colder air stream.The driving force behind the exchange is the difference in temperatures between the opposing air streams which is also called the thermal gradient. Bypass dampers will be provided on outside air path.

Figure 18. Total energy wheel

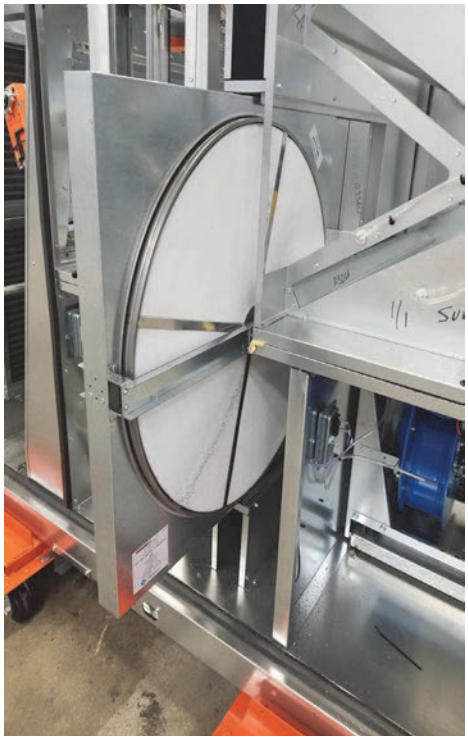

Total Energy Wheel (Aluminum)

The rotor media shall be lightweight and be made of aluminum.The rotor media shall be coated to prohibit corrosion; etched or oxidized surfaces are not acceptable. All surfaces must be coated with a non-migrating adsorbent layer of desiccant prior to being formed into the honeycomb media structure to insure that all surfaces are coated and that adequate latent capacity is provided.The desiccant must be designed for the adsorption of water vapor.The media shall be cleanable with low temperature steam, hot water or light detergent without degrading the latent recovery. Bypass dampers will be provided on outside air paths.

Supply and Exhaust Fan and Motors

Fan motor shall be direct drive type with factory installed Variable Frequency Drive. All motors shall be thermally protected. All indoor fan motors meet the U.S. Energy Policy Act of 2005 (EPACT). Neoprene isolation pads will be provided under fan base. Refer to the following figure.

Figure 19. Supply Fan

Condenser Fan and Motors

The outdoor fans shall be direct-drive, statically and dynamically balanced, draw-through in the vertical discharge position.The fan motor shall be permanently lubricated and shall have built-in thermal overload protection.

Dampers—Low Leak

The outside/return air damper has a unit-controlled actuator with parallel-blades. For Class 1A dampers the blade construction is a 14-gauge galvanized steel, roll-formed airfoil-type and for standard dampers the blade construction is 16-gauge.

Electrical and Controls

Controls

Unit is completely factory-wired with necessary controls and contactor pressure lugs for power wiring. Units will provide an external location for mounting fused disconnect device. Micro-processor controls are provided for all 24-volt control functions. The resident control algorithms will make all heating, cooling and/or ventilating decisions in response to electronic signals from sensors measuring outdoor temperature and humidity. The control algorithm maintains accurate temperature control, minimizes drift from set point, and provides better building comfort.

Options

Electric Heating Option

Primary heat is supplied using Electric Resistance heaters. Heaters shall meet the requirements of the National Electrical Code and shall be listed by ETL for zero clearance to combustible surfaces and for use with air conditioning equipment. Heating elements shall be open coil, 80 percent nickel, 20 percent chromium, Grade A resistance wire. Type C alloys containing iron or other alloys are not acceptable. Coils shall be machine crimped into stainless steel terminals extending at least 1-inch into the air stream and all terminal hardware shall be stainless steel. Coils shall be supported by ceramic bushings staked into supporting brackets. Heater frames and terminal boxes shall be corrosion resistant steel. Unless otherwise indicated, the terminal box shall be NEMA 1 construction and shall be provided with a hinged, latching cover. Heaters shall be furnished with a disc type, automatic reset thermal cutout for primary over temperature protection. All heaters shall also be furnished with disc type, load-carrying manual reset thermal cutouts, factory wired in series with heater stages for secondary protection. Heat limiters or other fusible over temperature devices are not acceptable. Control will be 2 Staged type. Unit shall be suitable for use with Electric Resistance Heat. Refer to the following figure.

Figure 20. Electric heating

Indirect Gas-Fired Heating Option

Primary heat is supplied using indirect fired gas heating. The heating section shall have a progressive tubular heat exchanger design using 439 stainless steel or aluminized tube. An induced draft combustion blower shall be used to pull the combustion products through the firing tubes. The heater shall use a direct spark ignition (DS) system. On initial call for heat, the combustion blower shall purge the heat exchanger for 20 seconds before ignition. After three unsuccessful ignition attempts, the entire heating system shall be locked out until manually reset at the unit. Units shall be comply with the California requirement for low NO_x emissions. Unit shall be suitable for use with Natural Gas.

Filter Status Switch

This option indicates when filters require cleaning or replacement. The Filter Status switch triggers an information-only diagnostic message on the human interface and will allow continued unit operation.

Non-Fused Disconnect Switch

A 3-pole, molded case, disconnect switch with provisions for through the base electrical connections shall be installed. The disconnect switch will be installed in the unit in a water tight enclosure. Wiring will be provided from the switch to the unit high voltage terminal block. The switch will be UL/CSA agency recognized. The disconnect switch will be sized per NEC and UL guidelines.

Convenience Outlet

A convenience outlet is provided on the high voltage side of the unit. The GFI outlet is 115 volt, and capable of manual resetting. The convenience outlet will remain powered regardless of the position of the unit disconnect.

Figure 21. Convenience outlet

Roof Mounting Curb

The roof mounting curb is fabricated of 14-gage galvanized steel with a nominal 2-inch x 2-inch nailer setup. The curb ships knocked down with a curb gasket. Curb height options are 14-inch or 24-inches.

Crankcase Heaters

These band heaters provide improved compressor reliability by warming the oil to prevent migration during off-cycles or low ambient conditions. These are standard on scroll, digital and staged compressor options.

Discharge Line Thermostat

A bi-metal element discharge line thermostat is installed as a standard option on the discharge line of each system. This standard option provides extra protection to the compressors against high discharge temperatures in case of loss of charge, extremely high ambient and other conditions which could drive the discharge temperature higher. Discharge line thermostat is wired in series with high pressure control. When the discharge temperature rises above the protection limit, the bi-metal disc in the thermostat switches to the off position, opening the 24 Vac circuit. When the temperature on the discharge line cools down, the bi-metal disc closes the contactor circuit, providing power to the compressor.

Filters

Two inch standard MERV 8 filters shall be factory supplied on all units. Optional MERV 13 or MERV 14 filters with filter removal tool shall be available.

Phase Monitor

The Phase Monitor is a three-phase line monitor module that protects against phase loss, phase reversal and phase unbalance. It has an operating input voltage range of 190–600 Vac, and LED indicators for ON and FAULT. There are no field adjustments and the module will automatically reset from a fault condition.

Refrigerant Circuits

Each refrigerant circuit shall have thermostatic expansion devices, service pressure ports, check valves as required and liquid line filter driers factory installed as standard.

Unit Top

The top cover shall be one piece, or where seams exist, double hemmed and gasket sealed to prevent water leakage.

Variable Frequency Drive

Variable Frequency Drives are factory installed and tested to provide supply and exhaust fan motor speed modulation. VFDs on the supply fan, as compared to inlet guide vanes or discharge dampers, are quieter, more efficient, and are eligible for utility rebates.

CO_2 wiring

The unit wiring for field installed CO_2 sensors. Factory-installed CO_2 sensor wiring saves time and ensures proper unit connections for the field installed CO_2 sensor kits.

Eco-coated Coil

The cathodic epoxy type electrodisposition coating is formulated for high edge build to a number of different types of heat exchangers. The coating is selected to provide excellent resistance and durability to corrosive effects of alkalies, acids, alcohols, petroleum, seawater, salty air, and other corrosive environments. This coating shall be available on all fin and tube coils.

Condensate Overflow Switch

This will trigger an alarm and shall shut the compressors down in the event that a clogged condensate drain line prevents proper condensate removal from the unit.

Fault Detection and Diagnostics (FDD)

This offering meets the mandatory requirement of Title 24. This option provides detection of the following faults: Air temperature sensor failure/fault, not economizing when it should, economizing when it should not, damper not modulating, and excessive outdoor air. The FDD system shall be certified by the Energy Commission as meeting the requirements.

High Short Circuit Current Rating

Unit shall be provided with optional electrical subsystem that will withstand fault currents up to 65kA (208/ 230, 460 Vac) or 25kA (575 Vac) compliant with UL 1995. Each compressor circuit and the indoor fan shall have dedicated overcurrent protection. Three phase motors shall be protected by Class J time delay fuses. Single phase motors shall be protected by Class CC time delay fuses. All transformers shall also be protected with Class CC time delay fuses. Contactors shall be din rail mounted.

Human Interface

The Human Interface shall have a 7-inch color touchscreen display that conforms to FCC Part 15 Class B with an Ingress Protection Rating of IP24. The display text shall be readable by a person with 20/20 vision at a distance of 3 feet and 60° angle at lighting levels ranging from 100 lux - 25,000 lux. Also, the display shall operate at temperatures of 40°F to 158°F.

Single Zone VAV

SZVAV systems combine Trane application, control and system integration knowledge to exactly match fan speed with cooling and heating loads, regardless of the operating condition.

Note: *Zone sensors are required for units configured for Single Zone VAV indoor fan system control in order to enable Single Zone VAV functionality.*

Stainless Steel Drain Pan

This option provides excellent corrosion and oxidation resistance. Drain pan shall be constructed of 304 stainless steel.

Supply, Return, and Plenum Air Smoke Detector

With this field installed option installed, if smoke is detected, all unit operation will be shut down. Reset will be manual at the unit. Return Air Smoke Detectors require minimum allowable airflow when used with certain models. See the Installation, Operation, and Maintenance (IOM) manual for the models affected and the minimum allowable airflow required.

Through the Base Electrical with Disconnect Switch

Three-pole, molded case, disconnect switch with provisions for through the base electrical connections are available. The disconnect switch will be installed in the unit in a water tight enclosure with access through a swinging door. Factory wiring will be provided from the switch to the unit high voltage terminal block. The switch will be UL/CSA agency recognized.

Note: *The disconnect switch will be sized per NEC and UL guidelines but will not be used in place of unit overcurrent protection.*

Through the Base Utilities Access

An electrical service entrance shall be provided allowing electrical access for both control and main power connections inside the curb and through the base of the unit. Option will allow for field installation of liquid-tight conduit and an external field installed disconnect switch.

BACnet® Communications Interface

This option shall be provided to allow the unit to communicate directly with a generic open protocol BACnet TP Network Building Automation System Controls.

Fan Failure Switch

A dedicated differential pressure switch is available to achieve active fan failure indication. These indications will be registered with either a zone sensor with status indication lights or an Integrated Comfort™ System.

Differential Pressure Switches

These options allow for individual fan failure and dirty filter indication. The fan failure switch will disable all unit functions and “flash” the Service LED on the zone sensor. The dirty filter switch will light the Service LED on the zone sensor and will allow continued unit operation.

Economizer - Low Leak, Downflow

This accessory meets low leak requirements for ASHRAE 90.1, IECC, and CA Title 24 standards (3 cfm/ft^2@1" wg exterior air, 4 cfm/ft^2@1" wg return air). This option allows 100% outdoor air supply from 0-100% modulating dampers. It can be paired with powered exhaust for additional building pressure relief.This option is paired with Fault Detection and Diagnostics (FDD) to meet current mandatory CA Title 24 requirements. The economizers come with three control options, dry bulb and reference or comparative enthalpy (optional).

Indoor Fan Motor Shaft Grounding Ring

Shaft grounding rings are used on all VFD driven motors to provide a conductive discharge path away from the motor bearings to ground. Bearing Protection Ring shall be maintenance free circumferential ring of conductive micro fibers that discharges voltages to ground.

Reference or Comparative Enthalpy

Reference Enthalpy is used to measure and communicate outdoor humidity. The unit receives and uses this information to provide improved comfort cooling while using the economizer.

Comparative Enthalpy measures and communicates humidity for both outdoor and return air conditions, and return air temperature. The unit receives and uses this information to maximize use of economizer cooling, and to provide maximum occupant comfort control. Reference or Comparative Enthalpy option shall be available when a factory or field installed Downflow Economizer is ordered. This option is available on all downflow models.

CO_2 Sensor

The CO_2 sensor shall have the ability to monitor the concentration (parts per million, ppm) of CO_2 (Carbon Dioxide) in the air. As the CO_2 concentration changes, the outside air damper modulates to meet the current ventilation needs of the zone.

Humidity Sensor

Field installed, wall-mounted or duct-mounted humidity sensor is used to control activation of the hot gas reheat dehumidification option. The humidity sensor can be set for humidity levels between 40% and 60% relative humidity by adjusting the UC600 Options Module.

Motorized Outside Air Dampers

Outdoor air dampers shall open to default position when indoor fan starts. The damper shall close to the full closed position when indoor fan shuts down.

Powered Exhaust

The powered exhaust shall provide exhaust of return air, when using an economizer, to maintain better building pressurization.

The AHRI Certified mark indicates Trane U.S. Inc. participation in the AHRI Certification program. For verification of individual certified products, go to ahridirectory.org.

Trane - by Trane Technologies (NYSE: TT), a global climate innovator - creates comfortable, energy efficient indoor environments for commercial and residential applications. For more information, please visit trane.com or tranetechnologies.com.

Trane has a policy of continuous product and product data improvement and reserves the right to change design and specifications without notice. We are committed to using environmentally conscious print practices.

RT-PRC095A-EN 03 May 2021
(NEW)

©2021 Trane