Installation, Operation, and Maintenance

# Air-Cooled Scroll Chillers
# Model CGAM

20 to 130 Tons — Made in USA

**Model:** CGAM

**⚠ SAFETY WARNING**

**Only qualified personnel should install and service the equipment. The installation, starting up, and servicing of heating, ventilating, and air-conditioning equipment can be hazardous and requires specific knowledge and training. Improperly installed, adjusted or altered equipment by an unqualified person could result in death or serious injury. When working on the equipment, observe all precautions in the literature and on the tags, stickers, and labels that are attached to the equipment.**

July 2022

**CG-SVX17N-EN**

# Introduction

Read this manual thoroughly before operating or servicing this unit.

## Warnings, Cautions, and Notices

Safety advisories appear throughout this manual as required. Your personal safety and the proper operation of this machine depend upon the strict observance of these precautions.

The three types of advisories are defined as follows:

| | |
|---|---|
| **⚠WARNING** | Indicates a potentially hazardous situation which, if not avoided, could result in death or serious injury. |
| **⚠CAUTION** | Indicates a potentially hazardous situation which, if not avoided, could result in minor or moderate injury. It could also be used to alert against unsafe practices. |
| ***NOTICE*** | Indicates a situation that could result in equipment or property-damage only accidents. |

### Important Environmental Concerns

Scientific research has shown that certain man-made chemicals can affect the earth's naturally occurring stratospheric ozone layer when released to the atmosphere. In particular, several of the identified chemicals that may affect the ozone layer are refrigerants that contain Chlorine, Fluorine and Carbon (CFCs) and those containing Hydrogen, Chlorine, Fluorine and Carbon (HCFCs). Not all refrigerants containing these compounds have the same potential impact to the environment. Trane advocates the responsible handling of all refrigerants-including industry replacements for CFCs and HCFCs such as saturated or unsaturated HFCs and HCFCs.

### Important Responsible Refrigerant Practices

Trane believes that responsible refrigerant practices are important to the environment, our customers, and the air conditioning industry. All technicians who handle refrigerants must be certified according to local rules. For the USA, the Federal Clean Air Act (Section 608) sets forth the requirements for handling, reclaiming, recovering and recycling of certain refrigerants and the equipment that is used in these service procedures. In addition, some states or municipalities may have additional requirements that must also be adhered to for responsible management of refrigerants. Know the applicable laws and follow them.

**⚠WARNING**

**Proper Field Wiring and Grounding Required!**

**Failure to follow code could result in death or serious injury. All field wiring MUST be performed by qualified personnel. Improperly installed and grounded field wiring poses FIRE and ELECTROCUTION hazards. To avoid these hazards, you MUST follow requirements for field wiring installation and grounding as described in NEC and your local/state/national electrical codes.**

**⚠WARNING**

**Personal Protective Equipment (PPE) Required!**

**Failure to wear proper PPE for the job being undertaken could result in death or serious injury. Technicians, in order to protect themselves from potential electrical, mechanical, and chemical hazards, MUST follow precautions in this manual and on the tags, stickers, and labels, as well as the instructions below:**

- **Before installing/servicing this unit, technicians MUST put on all PPE required for the work being undertaken (Examples; cut resistant gloves/sleeves, butyl gloves, safety glasses, hard hat/bump cap, fall protection, electrical PPE and arc flash clothing). ALWAYS refer to appropriate Safety Data Sheets (SDS) and OSHA guidelines for proper PPE.**
- **When working with or around hazardous chemicals, ALWAYS refer to the appropriate SDS and OSHA/GHS (Global Harmonized System of Classification and Labeling of Chemicals) guidelines for information on allowable personal exposure levels, proper respiratory protection and handling instructions.**
- **If there is a risk of energized electrical contact, arc, or flash, technicians MUST put on all PPE in accordance with OSHA, NFPA 70E, or other country-specific requirements for arc flash protection, PRIOR to servicing the unit. NEVER PERFORM ANY SWITCHING, DISCONNECTING, OR VOLTAGE TESTING WITHOUT PROPER ELECTRICAL PPE AND ARC FLASH CLOTHING. ENSURE ELECTRICAL METERS AND EQUIPMENT ARE PROPERLY RATED FOR INTENDED VOLTAGE.**

©2022 Trane

**⚠WARNING**

### Follow EHS Policies!

**Failure to follow instructions below could result in death or serious injury.**

- **All Trane personnel must follow the company's Environmental, Health and Safety (EHS) policies when performing work such as hot work, electrical, fall protection, lockout/tagout, refrigerant handling, etc. Where local regulations are more stringent than these policies, those regulations supersede these policies.**
- **Non-Trane personnel should always follow local regulations.**

**⚠WARNING**

### Hazardous Service Procedures!

**Failure to follow all precautions in this manual and on the tags, stickers, and labels could result in death or serious injury.**
**Technicians, in order to protect themselves from potential electrical, mechanical, and chemical hazards, MUST follow precautions in this manual and on the tags, stickers, and labels, as well as the following instructions: Unless specified otherwise, disconnect all electrical power including remote disconnect and discharge all energy storing devices such as capacitors before servicing. Follow proper lockout/tagout procedures to ensure the power can not be inadvertently energized. When necessary to work with live electrical components, have a qualified licensed electrician or other individual who has been trained in handling live electrical components perform these tasks.**

## Factory Warranty Information

Compliance with the following is required to preserve the factory warranty:

***All Unit Installations***

Startup MUST be performed by Trane, or an authorized agent of Trane, to VALIDATE this WARRANTY. Contractor must provide a two-week startup notification to Trane (or an agent of Trane specifically authorized to perform startup).

## Copyright

This document and the information in it are the property of Trane, and may not be used or reproduced in whole or in part without written permission. Trane reserves the right to revise this publication at any time, and to make changes to its content without obligation to notify any person of such revision or change.

## Trademarks

All trademarks referenced in this document are the trademarks of their respective owners.

## Factory Training

Factory training is available through Trane University™ to help you learn more about the operation and maintenance of your equipment. To learn about available training opportunities contact Trane University™.

Online: www.trane.com/traneuniversity

Phone: 855-803-3563

Email: traneuniversity@trane.com

## Revision History

- Updated Installation - Mechanical and Installation - Electrical chapters.
- Running edits.

# Table of Contents


Model Number Descriptions . . . . . 7
Nameplates . . . . . 7
Unit Nameplate . . . . . 7
Compressor Nameplate . . . . . 7
Model Number Coding System . . . . . 7
Model Number Descriptions . . . . . 8
Unit Model Number Description . . . . . 8
Compressor Model Number Description . . . . 9
General Information . . . . . 10
Unit Description . . . . . 10
Accessory/Options Information . . . . . 12
General Data . . . . . 14
Pre-Installation . . . . . 24
Inspection Checklist . . . . . 24
Unit Storage . . . . . 24
Installation Requirements . . . . . 24
Dimensions and Weights . . . . . 25
Service Clearances . . . . . 25
Mounting Locations . . . . . 26
Unit without Wind Load Rating . . . . . 26
Units with Wind Load Rating . . . . . 29
Weights . . . . . 31
Base Units . . . . . 31
Option Weights . . . . . 36
Installation - Mechanical . . . . . 38
Location Requirements . . . . . 38
Sound Considerations . . . . . 38
Wind Load Considerations . . . . . 38
Foundation . . . . . 38
Clearances . . . . . 38
Rigging . . . . . 38
Lifting Procedure . . . . . 38
Center of Gravity . . . . . 40
Unit Isolation and Leveling . . . . . 45
General . . . . . 45
Isolator Options . . . . . 45
Isolator Selection and Placement . . . . . 48
Evaporator Piping . . . . . 65
Drainage . . . . . .65
Evaporator Piping Components . . . . . .65
Entering Chilled Water Piping . . . . . .66
Leaving Chilled Water Piping . . . . . .66
Water Strainer . . . . . .66
Flow Switch . . . . . .66
Evaporator Label . . . . . .67
Pressure Drop Curves . . . . . .68
Ambient Freeze Avoidance . . . . . .69
Low Evap Refrigerant Cutout/
Percent Glycol Recommendations . . . . . .69
Performance Adjustment Factors . . . . . .73
Partial Heat Recovery . . . . . .74
. . . . . .74
Partial Heat Recovery Piping . . . . . .74
Partial Heat Recovery Freeze Avoidance . .75
Partial Heat Recovery
Pressure Drop Curves . . . . . .76
Dual High Head Pump Package . . . . . .77
Pressure Drop Information -
Units with Optional Pump Package . . . . . .78
Pump Package Requirements . . . . . .81
Expansion Tank -
Maximum Loop Volume . . . . . .82
Installation - Electrical . . . . . .84
General Recommendations . . . . . .84
Installer-Supplied Components . . . . . .84
Power Supply Wiring . . . . . .85
Control Power Supply . . . . . .85
Heater Power Supply . . . . . .85
Partial Heat Recovery Power Supply . . . . . .86
Water Pump Power Supply . . . . . .86
Interconnecting Wiring . . . . . .86
Chilled Water Flow (Pump) Interlock . . . . . .86
Chilled Water Pump Control . . . . . .86
Chilled Water Pump Control —
Field Supplied Dual Pumps . . . . . .87
Chilled Water Pump Control —
Optional Pump Package . . . . . .88
Alarm and Status Relay Outputs

(Programmable Relays) . . . . . 88
Low Voltage Wiring . . . . . 88
Emergency Stop . . . . . 89
External Auto/Stop . . . . . 89
Ice Building Option . . . . . 89
External Chilled Water Setpoint (ECWS) Option . . . . . 89
External Demand Limit Setpoint (EDLS) Option . . . . . 90
ECWS and EDLS Analog Input Signal Wiring Details . . . . . 90
Chilled Water Reset (CWR) . . . . . 90
Percent Capacity Output Option . . . . . 91
Communications Interface Options . . . . . 92
Tracer Communications Interface . . . . . 92
LonTalk Communications Interface for Chillers (LCI-C) . . . . . 92
BACnet Interface (BCI-C) . . . . . 92
CGAM Operating Principles . . . . . 93
General . . . . . 93
Base Units . . . . . 94
Pump Package Components - Optional . . . 96
Buffer Tank Components - Optional . . . . . 100
Partial Heat Recovery Components . . . . . 100
Refrigerant Cycle . . . . . 102
Oil System Operation (CGAM) . . . . . 102
Sensor Requirements . . . . . 102
Controls Interface . . . . . 103
CH530 Communications Overview . . . . . 103
DynaView Interface . . . . . 103
Display Screens . . . . . 104
Basic Screen Format . . . . . 104
Auto, Stop/Immediate Stop . . . . . 104
Diagnostic Annunciation . . . . . 104
Manual Override Exists . . . . . 105
Main Screen . . . . . 105
Chiller Operating Mode . . . . . 105
Active Chilled Water Setpoint . . . . . 105
Other Active Setpoints . . . . . 106
Password-Protected Settings . . . . . 106
Settings Screen . . . . . 106
Local Time of Day Schedule Screen . . . . . 108
Lockout Screen . . . . . 111
Reports . . . . . 111
Power Up and Self Tests . . . . . 112
TechView . . . . . 112
Unit View . . . . . 114
Diagnostics View . . . . . 119
Configuration View . . . . . 119
Software View . . . . . 121
Binding View . . . . . 122
Pre-Start Checkout . . . . . 123
Start-Up and Shutdown . . . . . 124
Start-Up . . . . . 124
Seasonal Unit Start-Up Procedure . . . . . 124
Seasonal Unit Shutdown . . . . . 124
Sequence of Operation . . . . . 125
Software Operation Overview . . . . . 125
Power Up . . . . . 126
Power Up to Starting . . . . . 126
Stopped to Starting . . . . . 127
Normal Shutdown to Stopped . . . . . 127
Maintenance . . . . . 128
Recommended Maintenance . . . . . 128
Weekly . . . . . 128
Monthly . . . . . 128
Annual . . . . . 128
Refrigerant and Oil Charge Management . . 129
Lubrication System . . . . . 129
Oil Level . . . . . 129
Oil Testing . . . . . 129
Condenser Maintenance . . . . . 130
Microchannel Condensers . . . . . 130
Round Tube Plate Fin Condensers . . . . . 130
Evaporator Maintenance . . . . . 131
Water Strainer Maintenance . . . . . 131
Pump Package Maintenance . . . . . 132
Rust Prevention . . . . . 132
Diagnostics . . . . . 133
Main Processor Diagnostic . . . . . 134

Sensor Failure Diagnostics . . . . . 140
Communication Diagnostics . . . . . 141
Main Processor- Boot Messages and Diagnostics 145
Unit Wiring . . . . . 146
Log and Check Sheet . . . . . 147

# Model Number Descriptions

## Nameplates

The CGAM unit nameplates are applied to the exterior surface of the control panel door for 20-70 Ton sizes. The 80-120 Ton sizes have a nameplate on a support beam to the right side of the starter panel.

A compressor nameplate is located on each compressor.

See Figure 1.

## Unit Nameplate

The unit nameplate provides the following information:

- Unit model and size descriptor.
- Unit serial number.
- Identifies unit electrical requirements.
- Lists correct operating charges of R-410A and refrigerant oil.
- Lists unit design pressures.
- Identifies installation, operation and maintenance and service data literature.
- Lists drawing numbers for unit wiring diagrams.

## Compressor Nameplate

The compressor nameplate provides the following information:

- Compressor model number.
- Compressor serial number.
- Compressor electrical characteristics.
- Utilization Range.
- Recommended refrigerant.

## Model Number Coding System

The model numbers for the unit and the compressors are comprised of numbers and letter which represent features of the equipment.

See “Unit Model Number Description,” p. 8 and “Compressor Model Number Description,” p. 9 for details.

Each position, or group of positions, in a number or letter is used to represent a feature. For example, from the chart, we can determine that the letter “F” in digit 8 of the unit model number indicates unit voltage is 460/60/3.

**Figure 1. Unit and compressor nameplates**

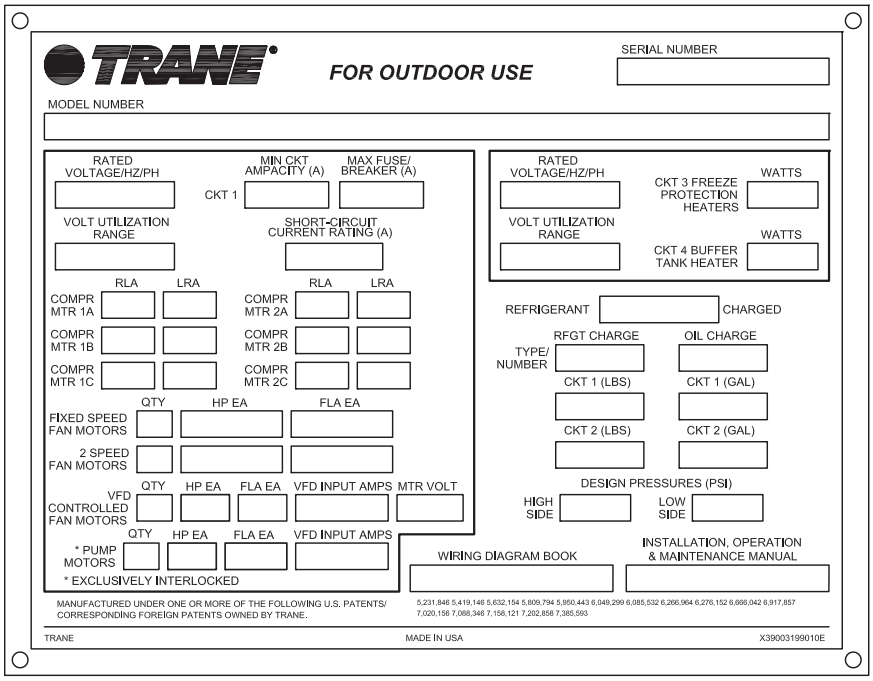


CGAM Unit Nameplate

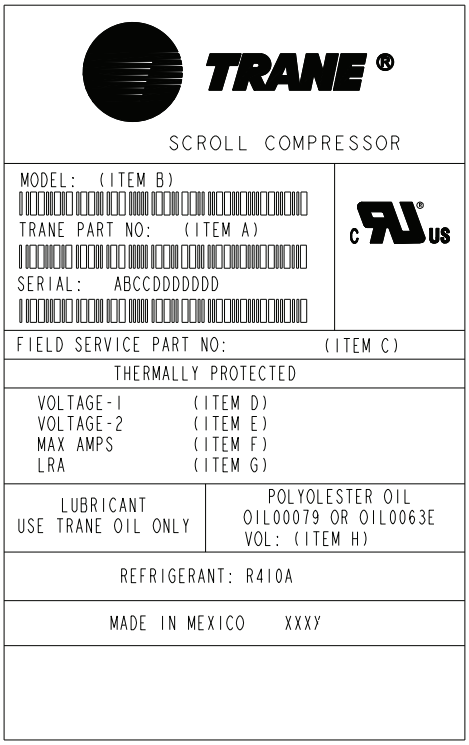


CGAM Compressor Nameplate

# Model Number Descriptions

## Unit Model Number Description

### Digits 1,2,3, 4— Chiller Model

CGAM= Air-Cooled Scroll Packaged Chiller

### Digits 5,6,7— Unit Nominal Ton

020 = 20 Tons
026 = 26 Tons
030 = 30 Tons
035 = 35 Tons
040 = 40 Tons
052 = 52 Tons
060 = 60 Tons
070 = 70 Tons
080 = 80 Tons
090 = 90 Tons
100 = 100 Tons
110 = 110 Tons
120 = 120 Tons
130 = 130 Tons

### Digit 8— Unit Voltage

A = 208 Volt 60 Hz 3 Phase
B = 230 Volt 60 Hz 3 Phase
D = 380 Volt 60 Hz 3 Phase
E = 400 Volt 50 Hz 3 Phase
F = 460 Volt 60 Hz 3 Phase
G = 575 Volt 60 Hz 3 Phase

### Digit 9— Manufacturing Plant

2 = Pueblo, USA

### Digits 10,11— Design Sequence

** = Factory/ABU Assigned

### Digit 12— Unit Type

2 = High Efficiency
3 = Extra Efficiency

### Digit 13— Agency Listing

X = No Agency Listing
A = UL Listed to U.S. and Canadian Safety Standard

### Digit 14— Pressure Vessel Code

X = No Pressure Vessel Code

### Digit 15— Unit Application

B = High Ambient (32-125°F/0-52°C)
D = Wide Ambient (0-125°F/-18-52°C)
J = Extreme Low Ambient — down to -20°F (-28.9°C)

### Digit 16— Refrigerant Isolation Valves

2 = Refrigerant Isolation Valves (Discharge Valve)

### Digit 17— Structural Options

A = Standard Unit Structure
B = Seismic to International Building Code (IBC)
C = California Office of Statewide Health Planning and Development (OSHPD) Certification
D = Wind Load for Florida Hurricane

### Digit 18— Freeze Protection (Factor-Installed Only)

X = Without Freeze Protection
1 = With Freeze Protection (External T-Stat Control)

### Digit 19— Insulation

A = Factory Insulation - All Cold Parts
B = Insulation for High Humidity/ Low Evap Temp

### Digit 20— Factory Charge

1 = Full Factory Refrigerant Charge (R-410A)
2 = Nitrogen Charge

### Digit 21— Evaporator Application

A = Standard Cooling (40 to 65°F/4.4 to 18°C)
B[1] = Low Temperature Process (10 to 40°F/-12.2 to 4.4°C)
C1 = Ice-Making - Hardwired Interface (20 to 65°F/-7 to 18°C)
D1 = Low Leaving Water (below 10°F/-12.2°C)

### Digit 22— Water Connections

1 = Grooved Pipe Connection

### Digit 23— Condenser Fin Material

A = Lanced Aluminum Fins
C = Non-Lanced Copper Fins
D = Lanced Aluminum Fins w/ CompleteCoat™
H = Microchannel Coils
J = Microchannel Coils w/ CompleteCoat

### Digit 24— Condenser Heat Recovery

X = No Heat Recovery
11 = Partial Heat Recovery with Fan Control

*Note: Heat pump option is only available on units manufactured in Epinal.*1

### Digit 25— Not Used

X

### Digit 26— Starter Type

A = Across the Line Starter/ Direct on Line

### Digit 27— Incoming Power Line Connection

1 = Single Point Power Connection

### Digit 28— Power Line Connection Type

A = Terminal Block
C = Circuit Breaker
D = Circuit Breaker with High Fault Rated Control Panel

### Digit 29— Enclosure Type

1 = Water Tight (per UL 1995 Standard)

### Digit 30— Unit Operator Interface

A = Dyna-View/English

### Digit 31— Remote Interface (Digital Comm)

X = No Remote Digital Communication
2 = LonTalk®/Tracer® Summit Interface
3 = Time of Day Scheduling
4 = BACNet® Interface

### Digit 32— External Chilled/Hot Water and Current Demand Limit Setpoint

X = No External Chilled Water Setpoint
A = External Chilled Water and Demand Limit Setpoint 4-20mA
B = External Chilled Water and Demand Limit Setpoint 2-10Vdc

### Digit 33— Percent Capacity

X = Without % Capacity
1 = With % Capacity

### Digit 34— Programmable Relays

X = No Programmable Relays
A = Programmable Relays

### Digit 35— Pump Type

X = No Pumps and No Contactors
8 = Dual High Head Pump

### Digit 36— Pump Flow Control

X = No Pump Control
B = Pump Flow Controlled by Variable Speed Drive

### Digit 37— Buffer Tank

X = None
B = With Buffer Tank

### Digit 38— Short Circuit Rating

X = No Short Circuit Rating
A = Default A Short Circuit Rating
B = High A Short Circuit Rating

[1] Units with this option selected will require a discharge temperature sensor.

### Digit 39— Installation Accessories

X = No Installation Accessories
1 = Elastomeric Isolators
3 = Seismically Rated Isolators
5 = Elastomeric Pads

### Digit 40— Water Strainer

A = With Water Strainer Factory Installed

### Digit 41— Sound Attenuator Package

3 = Super Quiet
5 = Comprehensive Acoustic Package

### Digit 42— Appearance Options

X = No Appearance Options
A = Architectural Louvered Panels
B = Half Louvers

### Digit 43— Exterior Finish

1 = Standard Paint

### Digit 44— Label, Literature Language

B = Spanish and English
D = English
E = French and English

### Digit 45— Phase Reversal Protection

1 = Phase Reversal Protection

### Digit 46— Shipping Package

X = No Skid (Standard)
A = Unit Containerization Package

### Digit 47— Performance Test Options

X = No Performance Test
2 = Test with Report
3 = Witness Test with Report

### Digit 48— Flow Switch Set Point

C = Flow Switch Set Point 15
F = Flow Switch Set Point 35
H = Flow Switch Set Point 45
L = Flow Switch Set Point 60

### Digit 49— Not Used

X

### Digit 50— Specials

X = None
S = Special

***Note:*** *If a digit is not defined it may be held for future use.*

# Compressor Model Number Description

### Digits 1,2,3, 4— Compressor Model

CSHD= Light Commercial
CSHN= Commercial
CSHL= Permanent Magnet

### Digits 5,6,7— Capacity

125 = CSHD 10.5 ton
161 = CSHD 13.4 ton
183 = CSHD 15 ton
184 = CSHN 15 ton
250 = CSHN 20 ton
315 = CSHN 25 ton
374 = CSHN or CSHL 30 ton

### Digit 8— Voltage

J = 200-230/60/3
K = 460/60/3 - 400/50/3
F = 230/50/3
D = 575/60/3
X = 380/60/3

### Digit 9— Unloading

0 = No Unloading

### Digit 10 — Design Sequence

Factory Assigned

### Digit 11— Protection Module Voltage

0 = Internal Line Break
A = 115 Vac
B = 230 Vac
H = 24 Vac
K = 115/230 Vac

### Digit 12— Basic Compressor Variation

M = Suction and Discharge Tube, Oil Equalizer with Seal Nut, Grade 32 POE oil

# General Information

## Unit Description

The CGAM units are scroll type, air-cooled, liquid chillers, designed for installation outdoors. The 20-35 ton units have a single independent refrigerant circuit, with two compressors per circuit. The 40 ton and larger units have 2 independent refrigerant circuits, with two compressors per circuit. The CGAM units are packaged with an evaporator and condenser.

***Note:*** *Each CGAM unit is a completely assembled, hermetic -compressors packaged unit that is factory-piped, wired, leak-tested, dehydrated, charged and tested for proper control operations prior to shipment. The chilled water inlet and outlet openings are covered for shipment.*

The CGAM series features Trane's exclusive Adaptive Control logic with CH530 controls. It monitors the control variables that govern the operation of the chiller unit. Adaptive Control logic can correct these variables, when necessary, to optimize operational efficiencies, avoid chiller shutdown, and keep producing chilled water.

Each refrigerant circuit is provided with filter, sight glass, electronic expansion valve, and charging valves on the CGAM.

The evaporator is a brazed plate heat exchanger which is equipped with a water drain and vent connections in the water piping.The condenser is an air-cooled slit or serpentine fin coil.

The condensers are available in three configurations depending on the tonnage of the unit. Units may be referred to the size by the condenser configuration. The three configurations are slant, V and W.

**Figure 2. CGAM slant 20 to 35 ton configuration**

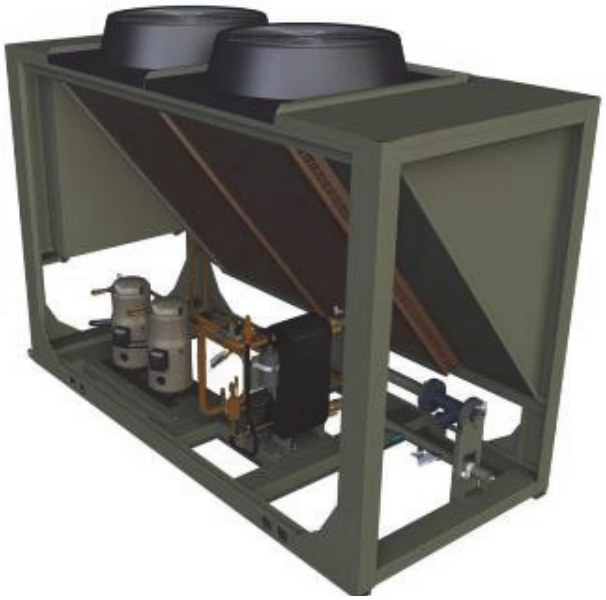

**Figure 3. CGAM “V” 40 to 70 ton configuration**

**Figure 4. CGAM “W” 80 to 130 ton configuration**

# Accessory/Options Information

Check all the accessories and loose parts which are shipped with the unit against the original order. Included in these items will be rigging diagrams, electrical diagrams, and service literature, which are placed inside the control panel and/or starter panel for shipment. Also check for optional components, such as isolators.

The unit elastomeric or seismic isolators and fan prop rod ship on brackets attached to the frame of the unit. The location varies by unit tonnage. The following figures show the location of these ship-with items for the various unit sizes.

Elastomeric pads required for units with wind load rating ship inside control panel.

**Figure 5. Ship with location — elastomeric or seismic isolators and prop rod 20 to 35 ton units**

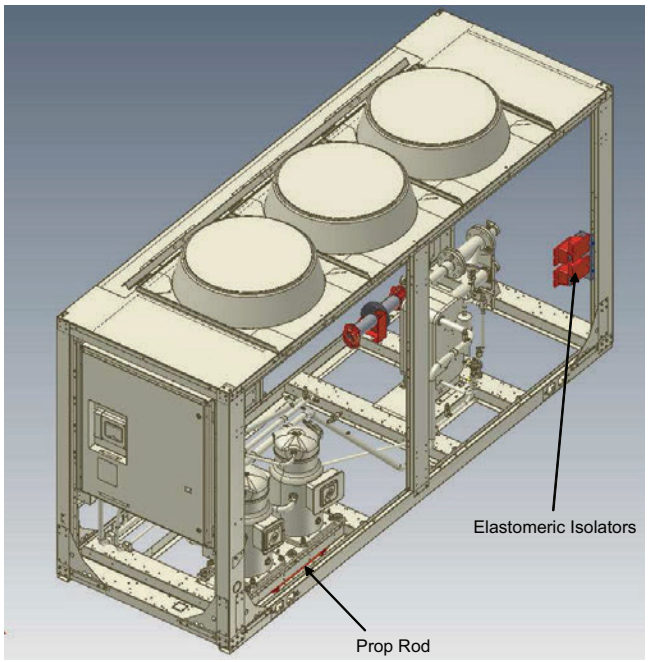


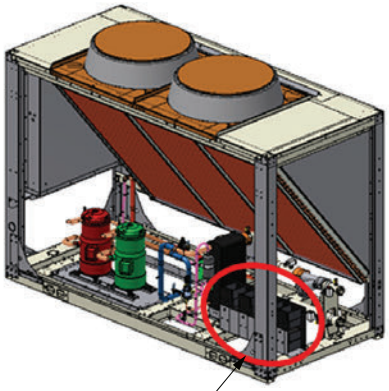


**Figure 6. Ship with location — elastomeric or seismic isolators and prop rod 40 to 70 ton units**

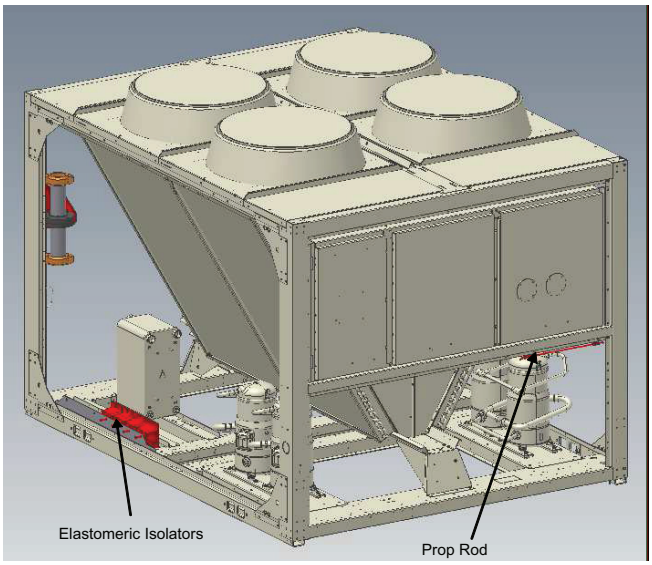


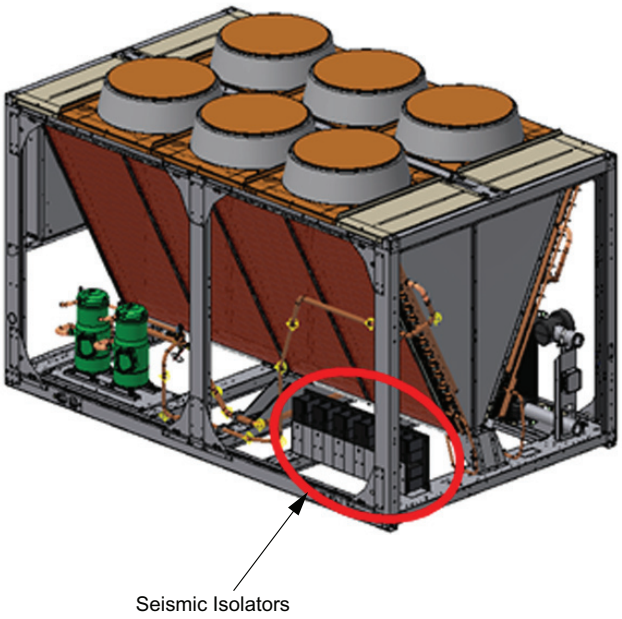

**Figure 7. Ship with location — elastomeric or seismic isolator and prop rod 80 to130 ton units**

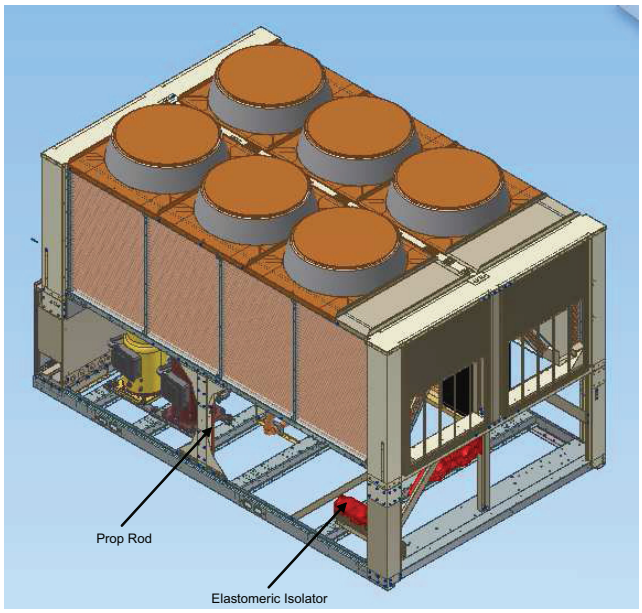


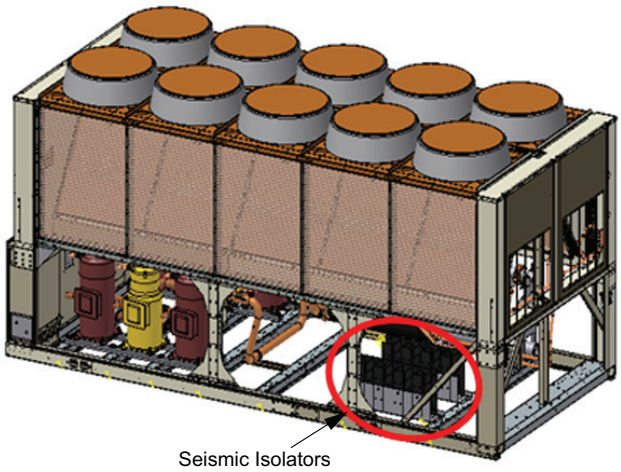

# General Data

**Table 1. General data, 60 Hz, high efficiency (I-P)**

| Size | | 20 | 26 | 30 | 35 | 40 | 52 | 60 | 70 | 80 | 90 | 100 | 110 | 120 | 130 |
|---|---|---|---|---|---|---|---|---|---|---|---|---|---|---|---|
| **Compressor** | | | | | | | | | | | | | | | |
| Number | # | 2 | 2 | 2 | 2 | 4 | 4 | 4 | 4 | 4 | 4 | 4 | 4 | 4 | 6 |
| Tonnage/ckt[a] | | 10+10 | 13+13 | 15+15 | 15+20 | 10+10 | 13+13 | 15+15 | 15+20 | 20+20 | 20+25 | 25+25 | 25+30 | 30+30 | 20+20+25 |
| **Evaporator** | | | | | | | | | | | | | | | |
| Water storage | (gal) | 1.4 | 2.2 | 2.2 | 3.2 | 2.4 | 4.1 | 5.0 | 7.5 | 7.0 | 9.0 | 10.3 | 11.5 | 11.5 | 12.3 |
| Min. flow [b] (LWT ≥42°F) | (gpm) | 23.2 | 29.8 | 33.1 | 39.2 | 45.4 | 58.8 | 67.1 | 79.5 | 91.8 | 102.6 | 115.5 | 125.2 | 135.9 | 146.9 |
| Min. flow(b) (LWT 40 to 41.9°F) | (gpm) | 29.1 | 37.2 | 41.8 | 49.1 | 56.7 | 73.5 | 83.9 | 99.4 | 114.7 | 128.3 | 144.4 | 156.5 | 169.9 | 183.7 |
| Max. flow(b) | (gpm) | 69.0 | 89.0 | 100.0 | 117.0 | 136.0 | 176.0 | 201.0 | 238.0 | 275.0 | 307.0 | 346.0 | 375.0 | 407.0 | 440.0 |
| Water connection | (in) | 2.0 | 2.5 | 2.5 | 2.5 | 3.0 | 3.0 | 3.0 | 3.0 | 4.0 | 4.0 | 4.0 | 4.0 | 4.0 | 4.0 |
| **Condenser** | | | | | | | | | | | | | | | |
| **Round Tube and Plate Fin Coils** | | | | | | | | | | | | | | | |
| Quantity of coils | # | 1 | 1 | 1 | 1 | 2 | 2 | 2 | 2 | 4 | 4 | 4 | 4 | 4 | 4 |
| Coil length | (in) | 91 | 91 | 127 | 127 | 91 | 91 | 127 | 127 | 121 | 121 | 144 | 144 | 144 | 180 |
| Coil height | (in) | 68 | 68 | 68 | 68 | 68 | 68 | 68 | 68 | 42 | 42 | 42 | 42 | 42 | 42 |
| Number of rows | # | 2 | 2 | 2 | 2 | 2 | 2 | 2 | 2 | 3 | 3 | 3 | 3 | 3 | 3 |
| Fins per foot | (fpf) | 192 | 192 | 192 | 192 | 192 | 192 | 192 | 192 | 192 | 192 | 192 | 192 | 192 | 192 |
| **Microchannel Coils** | | | | | | | | | | | | | | | |
| Quantity of coils | # | 1 | 1 | 1 | 1 | 2 | 2 | 2 | 2 | 8 | 8 | 8 | 8 | 8 | 8 |
| Coil length | (in) | 91 | 91 | 127 | 127 | 91 | 91 | 127 | 127 | 68+46 | 68+46 | 68+68 | 68+68 | 68+68 | 68+104 |
| Coil height[c] | (in) | 42+10 | 42+10 | 42+10 | 42+10 | 42+10 | 42+10 | 42+10 | 42+10 | 34+7 | 34+7 | 34+7 | 34+7 | 34+7 | 34+7 |
| Tube width | (in) | 1 | 1 | 1 | 1 | 1 | 1 | 1 | 1 | 1 | 1 | 1 | 1 | 1 | 1 |
| **Fan** | | | | | | | | | | | | | | | |
| Quantity | # | 2 | 2 | 3 | 3 | 4 | 4 | 6 | 6 | 6 | 6 | 8 | 8 | 8 | 10 |
| Diameter | (in) | 28.8 | 28.8 | 28.8 | 28.8 | 28.8 | 28.8 | 28.8 | 28.8 | 28.8 | 28.8 | 28.8 | 28.8 | 28.8 | 28.8 |
| Airflow per fan | (cfm) | 9413 | 9420 | 9168 | 9173 | 9413 | 9420 | 9168 | 9173 | 9470 | 9472 | 9094 | 9096 | 9098 | 9094 |
| Power per motor | (HP) | 1.3 | 1.3 | 1.3 | 1.3 | 1.3 | 1.3 | 1.3 | 1.3 | 1.3 | 1.3 | 1.3 | 1.3 | 1.3 | 1.3 |
| Motor RPM | (rpm) | 840 | 840 | 840 | 840 | 840 | 840 | 840 | 840 | 840 | 840 | 840 | 840 | 840 | 840 |
| Tip speed | (ft/min) | 6333 | 6333 | 6333 | 6333 | 6333 | 6333 | 6333 | 6333 | 6333 | 6333 | 6333 | 6333 | 6333 | 6333 |
| **General Unit** | | | | | | | | | | | | | | | |
| Refrig circuits | # | 1 | 1 | 1 | 1 | 2 | 2 | 2 | 2 | 2 | 2 | 2 | 2 | 2 | 2 |
| Capacity steps | % | 50-100 | 50-100 | 50-100 | 43-100 | 25-50-75-100 | 25-50-75-100 | 25-50-75-100 | 21-43-71-100 | 25-50-75-100 | 22-44-72-100 | 25-50-75-100 | 23-45-73-100 | 25-50-75-100 | 15-31-46-62-81-100 |
| Min ambient - wide | (°F) | 0 | 0 | 0 | 0 | 0 | 0 | 0 | 0 | 0 | 0 | 0 | 0 | 0 | 0 |
| Min ambient - high | (°F) | 32 | 32 | 32 | 32 | 32 | 32 | 32 | 32 | 32 | 32 | 32 | 32 | 32 | 32 |
| Min ambient - extreme low | (°F) | -20 | -20 | -20 | -20 | -20 | -20 | -20 | -20 | -20 | -20 | -20 | -20 | -20 | -20 |

**Table 1. General data, 60 Hz, high efficiency (I-P) (continued)**

| Size | | 20 | 26 | 30 | 35 | 40 | 52 | 60 | 70 | 80 | 90 | 100 | 110 | 120 | 130 |
|---|---|---|---|---|---|---|---|---|---|---|---|---|---|---|---|
| **Round Tube and Plate Fin Coils** | | | | | | | | | | | | | | | |
| Refrig charge/ckt(a) | (lbs) | 32 | 34 | 44 | 48 | 32 | 32 | 44 | 48 | 74 | 78 | 90 | 86 | 86 | 112 |
| Oil charge/ckt(a) | (gal) | 1.7 | 1.7 | 1.9 | 3.5 | 1.7 | 1.7 | 1.9 | 3.5 | 3.5 | 3.5 | 3.5 | 3.7 | 3.8 | 5.8 |
| **Microchannel Coils** | | | | | | | | | | | | | | | |
| Refrig charge/ckt (a) | (lbs) | 24 | 27.5 | 33 | 40 | 24 | 25.5 | 33 | 40.5 | 50 | 52 | 54 | 51 | 55 | 71 |
| Oil charge/ckt(a) | (gal) | 1.4 | 1.4 | 1.6 | 2.9 | 1.4 | 1.4 | 1.6 | 2.9 | 2.9 | 2.9 | 2.9 | 3.0 | 3.1 | 5.4 |
| **Pump Package** | | | | | | | | | | | | | | | |
| Avail head pressure(d) | (ft $H_2O$) | 78.2 | 77.7 | 71.1 | 67.6 | 67.1 | 58.6 | 76.7 | 63.5 | 82.0 | 78.1 | 69.0 | 61.9 | 71.3 | 62.2 |
| Power | (HP) | 5.0 | 5.0 | 5.0 | 5.0 | 5.0 | 5.0 | 7.5 | 7.5 | 10.0 | 10.0 | 10.0 | 10.0 | 15.0 | 15.0 |
| Expansion tank volume | (gal) | 5 | 5 | 5 | 5 | 5 | 5 | 5 | 5 | 6 | 6 | 6 | 6 | 6 | 6 |
| Buffer tank volume | (gal) | 140 | 140 | 140 | 140 | 140 | 140 | 140 | 140 | 152 | 152 | 195 | 195 | 195 | 195 |
| **Partial Heat Recovery** | | | | | | | | | | | | | | | |
| Water storage/ckt(a) | (gal) | 0.02 | 0.02 | 0.02 | 0.03 | 0.02 | 0.02 | 0.02 | 0.03 | 0.03 | 0.04 | 0.04 | 0.04 | 0.06 | 0.06 |
| Max flow | (gpm) | 39 | 39 | 39 | 39 | 78 | 78 | 78 | 78 | 127 | 127 | 127 | 127 | 127 | 127 |
| Water connection | (in) | 1.5 | 1.5 | 1.5 | 1.5 | 1.5 | 1.5 | 1.5 | 1.5 | 2.5 | 2.5 | 2.5 | 2.5 | 2.5 | 2.5 |

(a) Data shown for one circuit only. The second circuit always matches.
(b) Minimum and maximum flow rates apply to constant-flow chilled water system running at AHRI conditions, without freeze inhibitors added to the water loop.
(c) Microchannel coils are split horizontally between the condenser and subcooler coil.
(d) Pump available head pressure is based on 44/54°F evaporator with water, .0001 hr-$ft^2$-°F/Btu, 95°F ambient and 0 ft elevation.

### Table 2. General data, 60 Hz, high efficiency (SI)

| Size | | 20 | 26 | 30 | 35 | 40 | 52 | 60 | 70 | 80 | 90 | 100 | 110 | 120 | 130 |
|---|---|---|---|---|---|---|---|---|---|---|---|---|---|---|---|
| **Compressor** | | | | | | | | | | | | | | | |
| Number | # | 2 | 2 | 2 | 2 | 4 | 4 | 4 | 4 | 4 | 4 | 4 | 4 | 4 | 6 |
| Tonnage/ckt[a] | | 10+10 | 13+13 | 15+15 | 15+20 | 10+10 | 13+13 | 15+15 | 15+20 | 20+20 | 20+25 | 25+25 | 25+30 | 30+30 | 20+20+25 |
| **Evaporator** | | | | | | | | | | | | | | | |
| Water storage | (l) | 5.3 | 8.3 | 8.3 | 12.1 | 9.1 | 15.5 | 18.9 | 28.4 | 26.5 | 34.1 | 39.0 | 43.5 | 43.5 | 46.6 |
| Min. flow [b] (LWT ≥5.56°C) | (l/s) | 1.5 | 1.9 | 2.1 | 2.5 | 2.9 | 3.7 | 4.2 | 5.0 | 5.8 | 6.5 | 7.3 | 7.9 | 8.6 | 9.3 |
| Min. flow(b) (LWT 4.44 to 5.55°C) | (l/s) | 1.8 | 2.3 | 2.6 | 3.1 | 3.6 | 4.6 | 5.3 | 6.3 | 7.2 | 8.1 | 9.1 | 9.9 | 10.7 | 11.6 |
| Max. flow(b) | (l/s) | 4.4 | 5.6 | 6.3 | 7.4 | 8.6 | 11.1 | 12.7 | 15.1 | 17.4 | 19.4 | 21.9 | 23.7 | 25.7 | 27.8 |
| Water connection | (mm) | 50.8 | 63.5 | 63.5 | 63.5 | 76.2 | 76.2 | 76.2 | 76.2 | 101.6 | 101.6 | 101.6 | 101.6 | 101.6 | 101.6 |
| **Condenser** | | | | | | | | | | | | | | | |
| **Round Tube and Plate Fin Coils** | | | | | | | | | | | | | | | |
| Qty of coils | # | 1 | 1 | 1 | 1 | 2 | 2 | 2 | 2 | 4 | 4 | 4 | 4 | 4 | 4 |
| Coil length | (mm) | 2311 | 2311 | 3226 | 3226 | 2311 | 2311 | 3226 | 3226 | 3073 | 3073 | 3658 | 3658 | 3658 | 4572 |
| Coil height | (mm) | 1727 | 1727 | 1727 | 1727 | 1727 | 1727 | 1727 | 1727 | 1067 | 1067 | 1067 | 1067 | 1067 | 1067 |
| Number of rows | # | 2 | 2 | 2 | 2 | 2 | 2 | 2 | 2 | 3 | 3 | 3 | 3 | 3 | 3 |
| Fins per foot | (fpf) | 192 | 192 | 192 | 192 | 192 | 192 | 192 | 192 | 192 | 192 | 192 | 192 | 192 | 192 |
| **Microchannel Coils** | | | | | | | | | | | | | | | |
| Quantity of coils | # | 1 | 1 | 1 | 1 | 2 | 2 | 2 | 2 | 8 | 8 | 8 | 8 | 8 | 8 |
| Coil length | (mm) | 2311 | 2311 | 3226 | 3226 | 2311 | 2311 | 3226 | 3226 | 1727+1168 | 1727+1168 | 1727+1727 | 1727+1727 | 1727+1727 | 1727+2642 |
| Coil height[c] | (mm) | 1067+254 | 1067+254 | 1067+254 | 1067+254 | 1067+254 | 1067+254 | 1067+254 | 1067+254 | 864+178 | 864+178 | 864+178 | 864+178 | 864+178 | 864+178 |
| Tube width | (mm) | 25.4 | 25.4 | 25.4 | 25.4 | 25.4 | 25.4 | 25.4 | 25.4 | 25.4 | 25.4 | 25.4 | 25.4 | 25.4 | 25.4 |
| **Fan** | | | | | | | | | | | | | | | |
| Quantity | # | 2 | 2 | 3 | 3 | 4 | 4 | 6 | 6 | 4 | 6 | 8 | 8 | 8 | 10 |
| Diameter | (mm) | 732 | 732 | 732 | 732 | 732 | 732 | 732 | 732 | 732 | 732 | 732 | 732 | 732 | 732 |
| Airflow per fan | ($m^3/h$) | 15993 | 16005 | 15577 | 15585 | 15993 | 16005 | 15577 | 15585 | 16090 | 16093 | 15451 | 15454 | 15458 | 15451 |
| Power per motor | (HP) | 1.3 | 1.3 | 1.3 | 1.3 | 1.3 | 1.3 | 1.3 | 1.3 | 1.3 | 1.3 | 1.3 | 1.3 | 1.3 | 1.3 |
| Motor RPM | (rpm) | 840 | 840 | 840 | 840 | 840 | 840 | 840 | 840 | 840 | 840 | 840 | 840 | 840 | 840 |
| Tip speed | (m/s) | 32 | 32 | 32 | 32 | 32 | 32 | 32 | 32 | 32 | 32 | 32 | 32 | 32 | 32 |
| **General Unit** | | | | | | | | | | | | | | | |
| Refrig circuits | # | 1 | 1 | 1 | 1 | 2 | 2 | 2 | 2 | 2 | 2 | 2 | 2 | 2 | 2 |
| Capacity steps | % | 50-100 | 50-100 | 50-100 | 43-100 | 25-50-75-100 | 25-50-75-100 | 25-50-75-100 | 21-43-71-100 | 25-50-75-100 | 22-44-72-100 | 25-50-75-100 | 23-45-73-100 | 25-50-75-100 | 15-31-46-62-81-100 |
| Min ambient - wide | (°C) | -18 | -18 | -18 | -18 | -18 | -18 | -18 | -18 | -18 | -18 | -18 | -18 | -18 | -18 |
| Min ambient - high | (°C) | 0 | 0 | 0 | 0 | 0 | 0 | 0 | 0 | 0 | 0 | 0 | 0 | 0 | 0 |
| Min ambient - extreme low | (°C) | -28.9 | -28.9 | -28.9 | -28.9 | -28.9 | -28.9 | -28.9 | -28.9 | -28.9 | -28.9 | -28.9 | -28.9 | -28.9 | -28.9 |

**Table 2. General data, 60 Hz, high efficiency (SI) (continued)**

| Size | | 20 | 26 | 30 | 35 | 40 | 52 | 60 | 70 | 80 | 90 | 100 | 110 | 120 | 130 |
|---|---|---|---|---|---|---|---|---|---|---|---|---|---|---|---|
| **Round Tube and Plate Fin Coils** | | | | | | | | | | | | | | | |
| Refrig charge/ckt(a) | (kg) | 14.5 | 15.4 | 20 | 21.8 | 14.5 | 14.5 | 20 | 21.8 | 33.6 | 35.4 | 40.8 | 39 | 39 | 50.8 |
| Oil charge /ckt(a) | (l) | 6.6 | 6.6 | 7.2 | 13.4 | 6.6 | 6.6 | 7.2 | 13.4 | 13.4 | 13.4 | 13.4 | 13.9 | 14.4 | 22.0 |
| **Microchannel Coils** | | | | | | | | | | | | | | | |
| Refrig charge/ckt(a) | (kg) | 13.6 | 15.2 | 17.7 | 20.9 | 13.6 | 14.3 | 17.7 | 21.1 | 25.4 | 26.3 | 27.2 | 25.9 | 27.7 | 34.9 |
| Oil charge /ckt(a) | (l) | 5.4 | 5.4 | 5.9 | 11.0 | 5.4 | 5.4 | 5.9 | 11.0 | 11.0 | 11.0 | 11.0 | 11.4 | 11.8 | 18.0 |
| **Pump Package** | | | | | | | | | | | | | | | |
| Avail head pressure(d) | (kPa) | 233.7 | 232.3 | 212.6 | 202.1 | 200.6 | 175.0 | 229.2 | 189.7 | 245.1 | 233.3 | 206.3 | 185.0 | 213.1 | 185.8 |
| Power | (HP) | 5 | 5 | 5 | 5 | 5 | 5 | 7.5 | 7.5 | 10 | 10 | 10 | 10 | 15 | 15 |
| Expansion tank volume | (l) | 18.9 | 18.9 | 18.9 | 18.9 | 18.9 | 18.9 | 18.9 | 18.9 | 22.7 | 22.7 | 22.7 | 22.7 | 22.7 | 22.7 |
| Buffer tank volume | (l) | 530 | 530 | 530 | 530 | 530 | 530 | 530 | 530 | 575 | 575 | 727 | 727 | 727 | 727 |
| **Partial Heat Recovery** | | | | | | | | | | | | | | | |
| Water storage/ckt(a) | (l) | 0.07 | 0.09 | 0.09 | 0.11 | 0.07 | 0.09 | 0.09 | 0.11 | 0.12 | 0.16 | 0.16 | 0.16 | 0.21 | 0.21 |
| Max flow | (l/s) | 2.5 | 2.5 | 2.5 | 2.5 | 5.0 | 5.0 | 5.0 | 5.0 | 8.0 | 8.0 | 8.0 | 8.0 | 8.0 | 8.0 |
| Water connection | (mm) | 38.1 | 38.1 | 38.1 | 38.1 | 38.1 | 38.1 | 38.1 | 38.1 | 63.5 | 63.5 | 63.5 | 63.5 | 63.5 | 63.5 |

(a) Data shown for one circuit only. The second circuit always matches.
(b) Minimum and maximum flow rates apply to constant-flow chilled water system running at AHRI conditions, without freeze inhibitors added to the water loop.
(c) Microchannel coils are split horizontally between the condenser and subcooler coil.
(d) Pump available head pressure is based on 6.7/12.2°C evaporator with water, 0.01761 m²°C/kW, 35°C ambient and 0 m elevation.

### Table 3. General data, 50 Hz, high efficiency (I-P)

| Size | | 20 | 26 | 30 | 35 | 40 | 52 | 60 | 70 | 80 | 90 | 100 | 110 | 120 |
|---|---|---|---|---|---|---|---|---|---|---|---|---|---|---|
| **Compressor** | | | | | | | | | | | | | | |
| Number | # | 2 | 2 | 2 | 2 | 4 | 4 | 4 | 4 | 4 | 4 | 4 | 4 | 4 |
| Tonnage/ckt[a] | | 10+10 | 13+13 | 15+15 | 15+20 | 10+10 | 13+13 | 15+15 | 15+20 | 20+20 | 20+25 | 25+25 | 25+30 | 30+30 |
| **Evaporator** | | | | | | | | | | | | | | |
| Water storage | (gal) | 1.4 | 2.2 | 2.2 | 3.2 | 2.4 | 4.1 | 5.0 | 7.5 | 7.0 | 9.0 | 10.3 | 11.5 | 11.5 |
| Min. flow[b] (LWT ≥42°F) | (gpm) | 19.7 | 25.1 | 28.2 | 32.7 | 38.1 | 49.4 | 56.4 | 66.0 | 77.5 | 86.8 | 98.0 | 105.8 | 113.1 |
| Min. flow (b) (LWT 40 to 41.9°F) | (gpm) | 24.6 | 31.3 | 35.3 | 40.9 | 47.7 | 61.8 | 70.5 | 82.5 | 96.9 | 108.5 | 122.5 | 132.3 | 141.4 |
| Max. flow(b) | (gpm) | 59 | 75 | 85 | 98 | 115 | 149 | 170 | 199 | 234 | 262 | 296 | 319 | 341 |
| Water connection | (in) | 2 | 2.5 | 2.5 | 2.5 | 3 | 3 | 3 | 3 | 4 | 4 | 4 | 4 | 4 |
| **Condenser** | | | | | | | | | | | | | | |
| **Round Tube and Plate Fin Coils** | | | | | | | | | | | | | | |
| Quantity of coils | # | 1 | 1 | 1 | 1 | 2 | 2 | 2 | 2 | 4 | 4 | 4 | 4 | 4 |
| Coil length | (in) | 91 | 91 | 127 | 127 | 91 | 91 | 127 | 127 | 121 | 121 | 144 | 144 | 144 |
| Coil height | (in) | 68 | 68 | 68 | 68 | 68 | 68 | 68 | 68 | 42 | 42 | 42 | 42 | 42 |
| Number of rows | # | 2 | 2 | 2 | 2 | 2 | 2 | 2 | 2 | 3 | 3 | 3 | 3 | 3 |
| Fins per foot | (fpf) | 192 | 192 | 192 | 192 | 192 | 192 | 192 | 192 | 192 | 192 | 192 | 192 | 192 |
| **Microchannel Coils** | | | | | | | | | | | | | | |
| Quantity of coils | # | 1 | 1 | 1 | 1 | 2 | 2 | 2 | 2 | 8 | 8 | 8 | 8 | 8 |
| Coil length | (in) | 91 | 91 | 127 | 127 | 91 | 91 | 127 | 127 | 68+46 | 68+46 | 68+68 | 68+68 | 68+68 |
| Coil height[c] | (in) | 42+10 | 42+10 | 42+10 | 42+10 | 42+10 | 42+10 | 42+10 | 42+10 | 34+7 | 34+7 | 34+7 | 34+7 | 34+7 |
| Tube width | (in) | 1 | 1 | 1 | 1 | 1 | 1 | 1 | 1 | 1 | 1 | 1 | 1 | 1 |
| **Fan** | | | | | | | | | | | | | | |
| Quantity | # | 2 | 2 | 3 | 3 | 4 | 4 | 6 | 6 | 6 | 6 | 8 | 8 | 8 |
| Diameter | (in) | 28.8 | 28.8 | 28.8 | 28.8 | 28.8 | 28.8 | 28.8 | 28.8 | 28.8 | 28.8 | 28.8 | 28.8 | 28.8 |
| Airflow per fan | (cfm) | 7796 | 7783 | 7587 | 7590 | 7795 | 7801 | 7587 | 7590 | 7827 | 7829 | 7503 | 7505 | 7506 |
| Power per motor | (HP) | 1.3 | 1.3 | 1.3 | 1.3 | 1.3 | 1.3 | 1.3 | 1.3 | 1.3 | 1.3 | 1.3 | 1.3 | 1.3 |
| Motor RPM | (rpm) | 700 | 700 | 700 | 700 | 700 | 700 | 700 | 700 | 700 | 700 | 700 | 700 | 700 |
| Tip speed | (ft/min) | 5278 | 5278 | 5278 | 5278 | 5278 | 5278 | 5278 | 5278 | 5278 | 5278 | 5278 | 5278 | 5278 |
| **General Unit** | | | | | | | | | | | | | | |
| Refrig circuits | # | 1 | 1 | 1 | 1 | 2 | 2 | 2 | 2 | 2 | 2 | 2 | 2 | 2 |
| Capacity steps | % | 50-100 | 50-100 | 50-100 | 43-100 | 25-50-75-100 | 25-50-75-100 | 25-50-75-100 | 21-43-71-100 | 25-50-75-100 | 22-44-72-100 | 25-50-75-100 | 23-45-73-100 | 25-50-75-100 |
| Min ambient - wide | (°F) | 0 | 0 | 0 | 0 | 0 | 0 | 0 | 0 | 0 | 0 | 0 | 0 | 0 |
| Min ambient - high | (°F) | 32 | 32 | 32 | 32 | 32 | 32 | 32 | 32 | 32 | 32 | 32 | 32 | 32 |
| **Round Tube and Plate Fin Coils** | | | | | | | | | | | | | | |
| Refrig charge/ckt(a) | (lbs) | 32 | 34 | 44 | 48 | 32 | 32 | 44 | 48 | 74 | 78 | 90 | 86 | 86 |
| Oil charge/ckt(a) | (gal) | 1.7 | 1.7 | 1.9 | 3.5 | 1.7 | 1.7 | 1.9 | 3.5 | 3.5 | 3.5 | 3.5 | 3.7 | 3.8 |
| **Microchannel Coils** | | | | | | | | | | | | | | |
| Refrig charge/ckt(a) | (lbs) | 24 | 27.5 | 33 | 40 | 24 | 25.5 | 33 | 40.5 | 50 | 52 | 54 | 51 | 55 |
| Oil charge/ckt(a) | (gal) | 1.4 | 1.4 | 1.6 | 2.9 | 1.4 | 1.4 | 1.6 | 2.9 | 2.9 | 2.9 | 2.9 | 3.0 | 3.1 |
| **Partial Heat Recovery** | | | | | | | | | | | | | | |
| Water storage/ckt(a) | (gal) | 0.02 | 0.02 | 0.02 | .02 | 0.02 | 0.02 | 0.02 | 0.02 | 0.03 | 0.03 | 0.03 | 0.04 | 0.04 |
| Max flow | (gpm) | 39 | 39 | 39 | 39 | 78 | 78 | 78 | 78 | 127 | 127 | 127 | 127 | 127 |
| Water connection | (in) | 1.5 | 1.5 | 1.5 | 1.5 | 1.5 | 1.5 | 1.5 | 1.5 | 2.5 | 2.5 | 2.5 | 2.5 | 2.5 |

(a) Data shown for one circuit only. The second circuit always matches.
(b) Minimum and maximum flow rates apply to constant-flow chilled water system running at AHRI conditions, without freeze inhibitors added to the water loop.
(c) Microchannel coils are split horizontally between the condenser and subcooler coil.

### Table 4. General data, 50 Hz, high efficiency (SI)

| Size | | 20 | 26 | 30 | 35 | 40 | 52 | 60 | 70 | 80 | 90 | 100 | 110 | 120 |
|---|---|---|---|---|---|---|---|---|---|---|---|---|---|---|
| **Compressor** | | | | | | | | | | | | | | |
| Number | # | 2 | 2 | 2 | 2 | 4 | 4 | 4 | 4 | 4 | 4 | 4 | 4 | 4 |
| Tonnage/ckt[a] | | 10+10 | 13+13 | 15+15 | 15+20 | 10+10 | 13+13 | 15+15 | 15+20 | 20+20 | 20+25 | 25+25 | 25+30 | 30+30 |
| **Evaporator** | | | | | | | | | | | | | | |
| Water storage | (l) | 5.3 | 8.3 | 8.3 | 12.1 | 9.1 | 15.5 | 18.9 | 28.4 | 26.5 | 34.1 | 39.0 | 43.5 | 43.5 |
| Min. flow[b] (LWT ≥5.56°C) | (l/s) | 1.2 | 1.6 | 1.8 | 2.1 | 2.4 | 3.1 | 3.6 | 4.2 | 4.9 | 5.5 | 6.2 | 6.7 | 7.1 |
| Min. flow[b] (LWT 4.44 to 5.55°C) | (l/s) | 1.6 | 2.0 | 2.2 | 2.6 | 3.0 | 3.9 | 4.4 | 5.2 | 6.1 | 6.8 | 7.7 | 8.3 | 8.9 |
| Max. flow[b] | (l/s) | 3.7 | 4.8 | 5.4 | 6.2 | 7.3 | 9.4 | 10.8 | 12.6 | 14.8 | 16.5 | 18.7 | 20.2 | 21.6 |
| Water connection | (mm) | 50.8 | 63.5 | 63.5 | 63.5 | 76.2 | 76.2 | 76.2 | 76.2 | 101.6 | 101.6 | 101.6 | 101.6 | 101.6 |
| **Condenser** | | | | | | | | | | | | | | |
| **Round Tube and Plate Fin Coils** | | | | | | | | | | | | | | |
| Quantity of coils | # | 1 | 1 | 1 | 1 | 2 | 2 | 2 | 2 | 4 | 4 | 4 | 4 | 4 |
| Coil length | (mm) | 2311 | 2311 | 3226 | 3226 | 2311 | 2311 | 3226 | 3226 | 3073 | 3073 | 3658 | 3658 | 3658 |
| Coil height | (mm) | 1727 | 1727 | 1727 | 1727 | 1727 | 1727 | 1727 | 1727 | 1067 | 1067 | 1067 | 1067 | 1067 |
| Number of rows | # | 2 | 2 | 2 | 2 | 2 | 2 | 2 | 2 | 3 | 3 | 3 | 3 | 3 |
| Fins per foot | (fpf) | 192 | 192 | 192 | 192 | 192 | 192 | 192 | 192 | 192 | 192 | 192 | 192 | 192 |
| **Microchannel Coils** | | | | | | | | | | | | | | |
| Quantity of coils | # | 1 | 1 | 1 | 1 | 2 | 2 | 2 | 2 | 8 | 8 | 8 | 8 | 8 |
| Coil length | (mm) | 2311 | 2311 | 3226 | 3226 | 2311 | 2311 | 3226 | 3226 | 1727+ 1168 | 1727+ 1168 | 1727+ 1727 | 1727+ 1727 | 1727+ 1727 |
| Coil height[c] | (mm) | 1067+2 54 | 1067+2 54 | 1067+ 254 | 1067+ 254 | 1067+ 254 | 1067+ 254 | 1067+ 254 | 1067+ 254 | 864+ 178 | 864+ 178 | 864+ 178 | 864+ 178 | 864+ 178 |
| Tube width | (mm) | 25.4 | 25.4 | 25.4 | 25.4 | 25.4 | 25.4 | 25.4 | 25.4 | 25.4 | 25.4 | 25.4 | 25.4 | 25.4 |
| **Fan** | | | | | | | | | | | | | | |
| Quantity | # | 2 | 2 | 3 | 3 | 4 | 4 | 6 | 6 | 6 | 6 | 8 | 8 | 8 |
| Diameter | (mm) | 732 | 732 | 732 | 732 | 732 | 732 | 732 | 732 | 732 | 732 | 732 | 732 | 732 |
| Airflow per fan | ($m^3$/h) | 13245 | 13223 | 12890 | 12895 | 13244 | 13254 | 12890 | 12895 | 13298 | 13302 | 12748 | 12751 | 12753 |
| Power per motor | (HP) | 1.3 | 1.3 | 1.3 | 1.3 | 1.3 | 1.3 | 1.3 | 1.3 | 1.3 | 1.3 | 1.3 | 1.3 | 1.3 |
| Motor RPM | (rpm) | 700 | 700 | 700 | 700 | 700 | 700 | 700 | 700 | 700 | 700 | 700 | 700 | 700 |
| Tip speed | (m/s) | 26.8 | 26.8 | 26.8 | 26.8 | 26.8 | 26.8 | 26.8 | 26.8 | 26.8 | 26.8 | 26.8 | 26.8 | 26.8 |
| **General Unit** | | | | | | | | | | | | | | |
| Refrig circuits | # | 1 | 1 | 1 | 1 | 2 | 2 | 2 | 2 | 2 | 2 | 2 | 2 | 2 |
| Capacity steps | % | 50-100 | 50-100 | 50-100 | 43-100 | 25-50-75-100 | 25-50-75-100 | 25-50-75-100 | 21-43-71-100 | 25-50-75-100 | 22-44-72-100 | 25-50-75-100 | 23-45-73-100 | 25-50-75-100 |
| Min ambient - wide | (°C) | -18 | -18 | -18 | -18 | -18 | -18 | -18 | -18 | -18 | -18 | -18 | -18 | -18 |
| Min ambient - high | (°C) | 0 | 0 | 0 | 0 | 0 | 0 | 0 | 0 | 0 | 0 | 0 | 0 | 0 |
| **Round Tube and Plate Fin Coils** | | | | | | | | | | | | | | |
| Refrig charge/ckt[a] | (kg) | 14.5 | 15.4 | 20 | 21.8 | 14.5 | 14.5 | 20 | 21.8 | 33.6 | 35.4 | 40.8 | 39 | 39 |
| Oil charge/ckt[a] | (l) | 6.6 | 6.6 | 7.2 | 13.4 | 6.6 | 6.6 | 7.2 | 13.4 | 13.4 | 13.4 | 13.4 | 13.9 | 14.4 |
| **Microchannel Coils** | | | | | | | | | | | | | | |
| Refrig charge/ckt[a] | (kg) | 10.9 | 12.5 | 15 | 18.2 | 10.9 | 11.6 | 15 | 18.4 | 22.7 | 23.6 | 24.5 | 23.2 | 25 |
| Oil charge/ckt[a] | (l) | 5.4 | 5.4 | 5.9 | 11.0 | 5.4 | 5.4 | 5.9 | 11.0 | 11.0 | 11.0 | 11.0 | 11.4 | 11.8 |
| **Partial Heat Recovery** | | | | | | | | | | | | | | |
| Water storage/ckt[a] | (l) | 0.07 | 0.07 | 0.09 | 0.09 | 0.07 | 0.07 | 0.09 | 0.09 | 0.12 | 0.12 | 0.12 | 0.16 | 0.16 |
| Max flow | (l/s) | 2.5 | 2.5 | 2.5 | 2.5 | 5.0 | 5.0 | 5.0 | 5.0 | 8.0 | 8.0 | 8.0 | 8.0 | 8.0 |
| Water connection | (mm) | 38.1 | 38.1 | 38.1 | 38.1 | 38.1 | 38.1 | 38.1 | 38.1 | 63.5 | 63.5 | 63.5 | 63.5 | 63.5 |

(a) Data shown for one circuit only. The second circuit always matches.
(b) Minimum and maximum flow rates apply to constant-flow chilled water system running at AHRI conditions, without freeze inhibitors added to the water loop.
(c) Microchannel coils are split horizontally between the condenser and subcooler coil.

### Table 5. General data, 60 Hz, extra efficiency (I-P)

| Size | | 20 | 26 | 30 | 35 | 40 | 52 | 60 | 70 | 110 | 120 |
|---|---|---|---|---|---|---|---|---|---|---|---|
| **Compressor** | | | | | | | | | | | |
| Number | # | 2 | 2 | 2 | 2 | 4 | 4 | 4 | 4 | 4 | 4 |
| Tonnage/ckt(a) | | 10+10 | 13+13 | 15+15 | 15+20 | 10+10 | 13+13 | 15+15 | 15+20 | 25+30 | 30+30 |
| **Evaporator** | | | | | | | | | | | |
| Water storage | (gal) | 1.4 | 2.2 | 2.2 | 3.2 | 2.4 | 4.1 | 5.0 | 7.5 | 11.5 | 11.5 |
| Min. flow(b) (LWT ≥42°F) | (gpm) | 23.2 | 29.8 | 33.1 | 39.2 | 45.4 | 58.8 | 67.1 | 79.5 | 125.2 | 135.9 |
| Min. flow(b) (LWT 40 to 41.9°F) | (gpm) | 29.1 | 37.2 | 41.8 | 49.1 | 56.7 | 73.5 | 83.9 | 99.4 | 156.5 | 169.9 |
| Max. flow(b) | (gpm) | 69 | 89 | 100 | 117 | 136 | 176 | 201 | 238 | 375 | 407 |
| Water connection | (in) | 2 | 2.5 | 2.5 | 2.5 | 3 | 3 | 3 | 3 | 4 | 4 |
| **Condenser** | | | | | | | | | | | |
| **Round Tube and Plate Fin Coils** | | | | | | | | | | | |
| Quantity of coils | # | 1 | 1 | 1 | 1 | 2 | 2 | 2 | 2 | 4 | 4 |
| Coil length | (in) | 91 | 91 | 127 | 127 | 91 | 91 | 127 | 127 | 144 | 144 |
| Coil height | (in) | 68 | 68 | 68 | 68 | 68 | 68 | 68 | 68 | 42 | 42 |
| Number of rows | # | 3 | 3 | 3 | 3 | 3 | 3 | 3 | 3 | 3 | 3 |
| Fins per foot | (fpf) | 192 | 192 | 192 | 192 | 192 | 192 | 192 | 192 | 192 | 192 |
| **Fan** | | | | | | | | | | | |
| Quantity | # | 2 | 2 | 3 | 3 | 4 | 4 | 6 | 6 | 8 | 8 |
| Diameter | (in) | 28.8 | 28.8 | 28.8 | 28.8 | 28.8 | 28.8 | 28.8 | 28.8 | 28.8 | 28.8 |
| Airflow per fan | (cfm) | 9413 | 9420 | 9168 | 9173 | 9413 | 9420 | 9168 | 9173 | 9096 | 9098 |
| Power per motor | (HP) | 1.3 | 1.3 | 1.3 | 1.3 | 1.3 | 1.3 | 1.3 | 1.3 | 1.3 | 1.3 |
| Motor RPM | (rpm) | 840 | 840 | 840 | 840 | 840 | 840 | 840 | 840 | 840 | 840 |
| Tip speed | (ft/min) | 6333 | 6333 | 6333 | 6333 | 6333 | 6333 | 6333 | 6333 | 6333 | 6333 |
| **General Unit** | | | | | | | | | | | |
| Refrig circuits | # | 1 | 1 | 1 | 1 | 2 | 2 | 2 | 2 | 2 | 2 |
| Capacity steps | % | 50-100 | 50-100 | 50-100 | 43-100 | 25-50-75-100 | 25-50-75-100 | 25-50-75-100 | 21-43-71-100 | 23-45-73-100 | 25-50-75-100 |
| Min ambient - wide | (°F) | 0 | 0 | 0 | 0 | 0 | 0 | 0 | 0 | 0 | 0 |
| Min ambient - high | (°F) | 32 | 32 | 32 | 32 | 32 | 32 | 32 | 32 | 32 | 32 |
| **Round Tube and Plate Fin Coils** | | | | | | | | | | | |
| Refrig charge/ckt(a) | (lbs) | 45 | 48 | 62 | 68 | 42 | 42 | 57 | 62 | 86 | 86 |
| Oil charge/ckt(a) | (gal) | 1.7 | 1.7 | 1.9 | 3.5 | 1.7 | 1.7 | 1.9 | 3.5 | 3.7 | 3.8 |
| **Pump Package** | | | | | | | | | | | |
| Avail head pressure(c) | (ft $H_2O$) | 78.2 | 77.7 | 71.1 | 67.6 | 67.1 | 58.6 | 76.7 | 63.5 | 61.9 | 71.3 |
| Power | (HP) | 5 | 5 | 5 | 5 | 5 | 5 | 7.5 | 7.5 | 10 | 15 |
| Expansion tank volume | (gal) | 5 | 5 | 5 | 5 | 5 | 5 | 5 | 5 | 6 | 6 |
| Buffer tank volume | (gal) | 140 | 140 | 140 | 140 | 140 | 140 | 140 | 140 | 195 | 195 |
| **Partial Heat Recovery** | | | | | | | | | | | |
| Water storage/ckt(a) | (gal) | 0.02 | 0.02 | 0.02 | 0.03 | 0.02 | 0.02 | 0.02 | 0.03 | 0.04 | 0.06 |
| Max flow | (gpm) | 39 | 39 | 39 | 39 | 78 | 78 | 78 | 78 | 127 | 127 |
| Water connection | (in) | 1.5 | 1.5 | 1.5 | 1.5 | 1.5 | 1.5 | 1.5 | 1.5 | 2.5 | 2.5 |

(a) Data shown for one circuit only. The second circuit always matches.
(b) Minimum and maximum flow rates apply to constant-flow chilled water system running at AHRI conditions, without freeze inhibitors added to the water loop.
(c) Pump available head pressure is based on 44/54°F evaporator with water, .0001 hr-$ft^2$-°F/Btu, 95°F ambient and 0 ft elevation.

**Table 6. General data, 60 Hz, extra efficiency (SI)**

| Size | | 20 | 26 | 30 | 35 | 40 | 52 | 60 | 70 | 110 | 120 |
|---|---|---|---|---|---|---|---|---|---|---|---|
| **Compressor** | | | | | | | | | | | |
| Number | # | 2 | 2 | 2 | 2 | 4 | 4 | 4 | 4 | 4 | 4 |
| Tonnage/ckt(a) | | 10+10 | 13+13 | 15+15 | 15+20 | 10+10 | 13+13 | 15+15 | 15+20 | 25+30 | 30+30 |
| **Evaporator** | | | | | | | | | | | |
| Water storage | (l) | 5.3 | 8.3 | 8.3 | 12.1 | 9.1 | 15.5 | 18.9 | 28.4 | 43.5 | 43.5 |
| Min. flow(b) (LWT ≥5.56°C) | (l/s) | 1.5 | 1.9 | 2.1 | 2.5 | 2.9 | 3.7 | 4.2 | 5.0 | 7.9 | 8.6 |
| Min. flow(b) (LWT 4.44 to 5.55°C) | (l/s) | 1.8 | 2.3 | 2.6 | 3.1 | 3.6 | 4.6 | 5.3 | 6.3 | 9.9 | 10.7 |
| Max. flow(b) | (l/s) | 4.4 | 5.6 | 6.3 | 7.4 | 8.6 | 11.1 | 12.7 | 15.1 | 23.7 | 25.7 |
| Water connection | (mm) | 50.8 | 63.5 | 63.5 | 63.5 | 76.2 | 76.2 | 76.2 | 76.2 | 101.6 | 101.6 |
| **Condenser** | | | | | | | | | | | |
| **Round Tube and Plate Fin Coils** | | | | | | | | | | | |
| Qty of coils | # | 1 | 1 | 1 | 1 | 2 | 2 | 2 | 2 | 4 | 4 |
| Coil length | (mm) | 2311 | 2311 | 3226 | 3226 | 2311 | 2311 | 3226 | 3226 | 3658 | 3658 |
| Coil height | (mm) | 1727 | 1727 | 1727 | 1727 | 1727 | 1727 | 1727 | 1727 | 1067 | 1067 |
| Number of rows | # | 3 | 3 | 3 | 3 | 3 | 3 | 3 | 3 | 3 | 3 |
| Fins per foot | (fpf) | 192 | 192 | 192 | 192 | 192 | 192 | 192 | 192 | 192 | 192 |
| **Fan** | | | | | | | | | | | |
| Quantity | # | 2 | 2 | 3 | 3 | 4 | 4 | 6 | 6 | 8 | 8 |
| Diameter | (mm) | 732 | 732 | 732 | 732 | 732 | 732 | 732 | 732 | 732 | 732 |
| Airflow per fan | (m³/h) | 15993 | 16005 | 15577 | 15585 | 15993 | 16005 | 15577 | 15585 | 15454 | 15458 |
| Power per motor | (HP) | 1.3 | 1.3 | 1.3 | 1.3 | 1.3 | 1.3 | 1.3 | 1.3 | 1.3 | 1.3 |
| Motor RPM | (rpm) | 840 | 840 | 840 | 840 | 840 | 840 | 840 | 840 | 840 | 840 |
| Tip speed | (m/s) | 32 | 32 | 32 | 32 | 32 | 32 | 32 | 32 | 32 | 32 |
| **General Unit** | | | | | | | | | | | |
| Refrig circuits | # | 1 | 1 | 1 | 1 | 2 | 2 | 2 | 2 | 2 | 2 |
| Capacity steps | % | 50-100 | 50-100 | 50-100 | 43-100 | 25-50-75-100 | 25-50-75-100 | 25-50-75-100 | 21-43-71-100 | 23-45-73-100 | 25-50-75-100 |
| Min ambient - wide | (°C) | -18 | -18 | -18 | -18 | -18 | -18 | -18 | -18 | -18 | -18 |
| Min ambient - high | (°C) | 0 | 0 | 0 | 0 | 0 | 0 | 0 | 0 | 0 | 0 |
| **Round Tube and Plate Fin Coils** | | | | | | | | | | | |
| Refrig charge/ckt(a) | (kg) | 20.4 | 21.8 | 28.1 | 30.8 | 19.1 | 19.1 | 25.9 | 28.1 | 39 | 39 |
| Oil charge /ckt(a) | (l) | 6.6 | 6.6 | 7.2 | 13.4 | 6.6 | 6.6 | 7.2 | 13.4 | 13.9 | 14.4 |
| **Pump Package** | | | | | | | | | | | |
| Avail head pressure(c) | (kPa) | 233.7 | 232.3 | 212.6 | 202.1 | 200.6 | 175.0 | 229.2 | 189.7 | 185.0 | 213.1 |
| Power | (HP) | 5 | 5 | 5 | 5 | 5 | 5 | 7.5 | 7.5 | 10 | 15 |
| Expansion tank volume | (l) | 18.9 | 18.9 | 18.9 | 18.9 | 18.9 | 18.9 | 18.9 | 18.9 | 22.7 | 22.7 |
| Buffer tank volume | (l) | 530 | 530 | 530 | 530 | 530 | 530 | 530 | 530 | 727 | 727 |
| **Partial Heat Recovery** | | | | | | | | | | | |
| Water storage/ckt(a) | (l) | 0.07 | 0.09 | 0.09 | 0.11 | 0.07 | 0.09 | 0.09 | 0.11 | 0.16 | 0.21 |
| Max flow | (l/s) | 2.5 | 2.5 | 2.5 | 2.5 | 5.0 | 5.0 | 5.0 | 5.0 | 8.0 | 8.0 |
| Water connection | (mm) | 38.1 | 38.1 | 38.1 | 38.1 | 38.1 | 38.1 | 38.1 | 38.1 | 63.5 | 63.5 |

(a) Data shown for one circuit only. The second circuit always matches.
(b) Minimum and maximum flow rates apply to constant-flow chilled water system running at AHRI conditions, without freeze inhibitors added to the water loop.
(c) Pump available head pressure is based on 6.7/12.2°C evaporator with water, 0.01761 m²°C/kW, 35°C ambient and 0 m elevation.

### Table 7. General data, 50 Hz, extra efficiency (I-P)

| Size | | 20 | 26 | 30 | 35 | 40 | 52 | 60 | 70 | 110 | 120 |
|---|---|---|---|---|---|---|---|---|---|---|---|
| **Compressor** | | | | | | | | | | | |
| Number | # | 2 | 2 | 2 | 2 | 4 | 4 | 4 | 4 | 4 | 4 |
| Tonnage/ckt(a) | | 10+10 | 13+13 | 15+15 | 15+20 | 10+10 | 13+13 | 15+15 | 15+20 | 25+30 | 30+30 |
| **Evaporator** | | | | | | | | | | | |
| Water storage | (gal) | 1.4 | 2.2 | 2.2 | 3.2 | 2.4 | 4.1 | 5.0 | 7.5 | 11.5 | 11.5 |
| Min. flow(b) (LWT ≥42°F) | (gpm) | 19.7 | 25.1 | 28.2 | 32.7 | 38.1 | 49.4 | 56.4 | 66.0 | 105.8 | 113.1 |
| Min. flow(b) (LWT 40 to 41.9°F) | (gpm) | 24.6 | 31.3 | 35.3 | 40.9 | 47.7 | 61.8 | 70.5 | 82.5 | 132.3 | 141.4 |
| Max. flow(b) | (gpm) | 59 | 75 | 85 | 98 | 115 | 149 | 170 | 199 | 319 | 341 |
| Water connection | (in) | 2 | 2.5 | 2.5 | 2.5 | 3 | 3 | 3 | 3 | 4 | 4 |
| **Condenser** | | | | | | | | | | | |
| **Round Tube and Plate Fin Coils** | | | | | | | | | | | |
| Quantity of coils | # | 1 | 1 | 1 | 1 | 2 | 2 | 2 | 2 | 4 | 4 |
| Coil length | (in) | 91 | 91 | 127 | 127 | 91 | 91 | 127 | 127 | 144 | 144 |
| Coil height | (in) | 68 | 68 | 68 | 68 | 68 | 68 | 68 | 68 | 42 | 42 |
| Number of rows | # | 2 | 2 | 2 | 2 | 2 | 2 | 2 | 2 | 3 | 3 |
| Fins per foot | (fpf) | 192 | 192 | 192 | 192 | 192 | 192 | 192 | 192 | 192 | 192 |
| **Fan** | | | | | | | | | | | |
| Quantity | # | 2 | 2 | 3 | 3 | 4 | 4 | 6 | 6 | 8 | 8 |
| Diameter | (in) | 28.8 | 28.8 | 28.8 | 28.8 | 28.8 | 28.8 | 28.8 | 28.8 | 28.8 | 28.8 |
| Airflow/fan | (cfm) | 7796 | 7783 | 7587 | 7590 | 7795 | 7801 | 7587 | 7590 | 7505 | 7506 |
| Power/motor | (HP) | 1.3 | 1.3 | 1.3 | 1.3 | 1.3 | 1.3 | 1.3 | 1.3 | 1.3 | 1.3 |
| Motor RPM | (rpm) | 700 | 700 | 700 | 700 | 700 | 700 | 700 | 700 | 700 | 700 |
| Tip speed | (ft/min) | 5278 | 5278 | 5278 | 5278 | 5278 | 5278 | 5278 | 5278 | 5278 | 5278 |
| **General Unit** | | | | | | | | | | | |
| Refrig circuits | # | 1 | 1 | 1 | 1 | 2 | 2 | 2 | 2 | 2 | 2 |
| Capacity steps | % | 50-100 | 50-100 | 50-100 | 43-100 | 25-50-75-100 | 25-50-75-100 | 25-50-75-100 | 21-43-71-100 | 23-45-73-100 | 25-50-75-100 |
| Min ambient - wide | (°F) | 0 | 0 | 0 | 0 | 0 | 0 | 0 | 0 | 0 | 0 |
| Min ambient - high | (°F) | 32 | 32 | 32 | 32 | 32 | 32 | 32 | 32 | 32 | 32 |
| **Round Tube and Plate Fin Coils** | | | | | | | | | | | |
| Refrig charge/ckt(a) | (lbs) | 45 | 48 | 62 | 68 | 42 | 42 | 57 | 62 | 86 | 86 |
| Oil charge/ckt(a) | (gal) | 1.7 | 1.7 | 1.9 | 3.5 | 1.7 | 1.7 | 1.9 | 3.5 | 3.7 | 3.8 |
| **Partial Heat Recovery** | | | | | | | | | | | |
| Water storage/ckt(a) | (gal) | 0.02 | 0.02 | 0.02 | .02 | 0.02 | 0.02 | 0.02 | 0.02 | 0.04 | 0.04 |
| Max flow | (gpm) | 39 | 39 | 39 | 39 | 78 | 78 | 78 | 78 | 127 | 127 |
| Water connection | (in) | 1.5 | 1.5 | 1.5 | 1.5 | 1.5 | 1.5 | 1.5 | 1.5 | 2.5 | 2.5 |

(a) Data shown for circuit one only. The second circuits always matches.
(b) Minimum and maximum flow rates apply to constant-flow chilled water system running at AHRI conditions, without freeze inhibitors added to the water loop.

**Table 8. General data, 50 Hz, extra efficiency (SI)**

| Size | | 20 | 26 | 30 | 35 | 40 | 52 | 60 | 70 | 110 | 120 |
|---|---|---|---|---|---|---|---|---|---|---|---|
| **Compressor** | | | | | | | | | | | |
| Number | # | 2 | 2 | 2 | 2 | 4 | 4 | 4 | 4 | 4 | 4 |
| Tonnage/ckt[a] | | 10+10 | 13+13 | 15+15 | 15+20 | 10+10 | 13+13 | 15+15 | 15+20 | 25+30 | 30+30 |
| **Evaporator** | | | | | | | | | | | |
| Water storage | (l) | 5.3 | 8.3 | 8.3 | 12.1 | 9.1 | 15.5 | 18.9 | 28.4 | 43.5 | 43.5 |
| Min. flow[b] (LWT ≥5.56°C) | (l/s) | 1.2 | 1.6 | 1.8 | 2.1 | 2.4 | 3.1 | 3.6 | 4.2 | 6.7 | 7.1 |
| Min. flow(b) (LWT 4.44 to 5.55°C) | (l/s) | 1.6 | 2.0 | 2.2 | 2.6 | 3.0 | 3.9 | 4.4 | 5.2 | 8.3 | 8.9 |
| Max. flow(b) | (l/s) | 3.7 | 4.8 | 5.4 | 6.2 | 7.3 | 9.4 | 10.8 | 12.6 | 20.2 | 21.6 |
| Water connection | (mm) | 50.8 | 63.5 | 63.5 | 63.5 | 76.2 | 76.2 | 76.2 | 76.2 | 101.6 | 101.6 |
| **Condenser** | | | | | | | | | | | |
| **Round Tube and Plate Fin Coils** | | | | | | | | | | | |
| Quantity of coils | # | 1 | 1 | 1 | 1 | 2 | 2 | 2 | 2 | 4 | 4 |
| Coil length | (mm) | 2311 | 2311 | 3226 | 3226 | 2311 | 2311 | 3226 | 3226 | 3658 | 3658 |
| Coil height | (mm) | 1727 | 1727 | 1727 | 1727 | 1727 | 1727 | 1727 | 1727 | 1067 | 1067 |
| Number of rows | # | 2 | 2 | 2 | 2 | 2 | 2 | 2 | 2 | 3 | 3 |
| Fins per foot | (fpf) | 192 | 192 | 192 | 192 | 192 | 192 | 192 | 192 | 192 | 192 |
| **Fan** | | | | | | | | | | | |
| Quantity | # | 2 | 2 | 3 | 3 | 4 | 4 | 6 | 6 | 8 | 8 |
| Diameter | (mm) | 732 | 732 | 732 | 732 | 732 | 732 | 732 | 732 | 732 | 732 |
| Airflow/fan | (m³/h) | 13245 | 13223 | 12890 | 12895 | 13244 | 13254 | 12890 | 12895 | 12751 | 12753 |
| Power/motor | (HP) | 1.3 | 1.3 | 1.3 | 1.3 | 1.3 | 1.3 | 1.3 | 1.3 | 1.3 | 1.3 |
| Motor RPM | (rpm) | 700 | 700 | 700 | 700 | 700 | 700 | 700 | 700 | 700 | 700 |
| Tip speed | (m/s) | 26.8 | 26.8 | 26.8 | 26.8 | 26.8 | 26.8 | 26.8 | 26.8 | 26.8 | 26.8 |
| **General Unit** | | | | | | | | | | | |
| Refrig circuits | # | 1 | 1 | 1 | 1 | 2 | 2 | 2 | 2 | 2 | 2 |
| Capacity steps | % | 50-100 | 50-100 | 50-100 | 43-100 | 25-50-75-100 | 25-50-75-100 | 25-50-75-100 | 21-43-71-100 | 23-45-73-100 | 25-50-75-100 |
| Min ambient - wide | (°C) | -18 | -18 | -18 | -18 | -18 | -18 | -18 | -18 | -18 | -18 |
| Min ambient - high | (°C) | 0 | 0 | 0 | 0 | 0 | 0 | 0 | 0 | 0 | 0 |
| **Round Tube and Plate Fin Coils** | | | | | | | | | | | |
| Refrig charge/ckt(a) | (kg) | 20.4 | 21.8 | 28.1 | 30.8 | 19.1 | 19.1 | 25.9 | 28.1 | 39 | 39 |
| Oil charge/ckt(a) | (l) | 6.6 | 6.6 | 7.2 | 13.4 | 6.6 | 6.6 | 7.2 | 13.4 | 13.9 | 14.4 |
| **Partial Heat Recovery** | | | | | | | | | | | |
| Water storage/ckt(a) | (l) | 0.07 | 0.07 | 0.09 | 0.09 | 0.07 | 0.07 | 0.09 | 0.09 | 0.16 | 0.16 |
| Max flow | (l/s) | 2.5 | 2.5 | 2.5 | 2.5 | 5.0 | 5.0 | 5.0 | 5.0 | 8.0 | 8.0 |
| Water connection | (mm) | 38.1 | 38.1 | 38.1 | 38.1 | 38.1 | 38.1 | 38.1 | 38.1 | 63.5 | 63.5 |

(a) Data shown for circuit one only. The second circuit always matches.
(b) Minimum and maximum flow rates apply to constant-flow chilled water system running at AHRI conditions, without freeze inhibitors added to the water loop.

# Pre-Installation

## Inspection Checklist

When the unit is delivered, verify that it is the correct unit and that it is properly equipped. Compare the information which appears on the unit nameplate with the ordering and submittal information.

Inspect all exterior components for visible damage. Report any apparent damage or material shortage to the carrier and make a “unit damage” notation on the carrier's delivery receipt. Specify the extent and type of damage found and notify the appropriate Trane Sales Office.

Do not proceed with installation of a damaged unit without sales office approval.

To protect against loss due to damage incurred in transit, complete the following checklist upon receipt of the unit.

- Inspect the individual pieces of the shipment before accepting the unit. Check for obvious damage to the unit or packing material.
- Inspect the unit for concealed damage as soon as possible after delivery and before it is stored. Concealed damage must be reported within 15 days.
- If concealed damage is discovered, stop unpacking the shipment. Do not remove damaged material from the receiving location. Take photos of the damage, if possible. The owner must provide reasonable evidence that the damage did not occur after delivery.
- Notify the carrier's terminal of the damage immediately, by phone and by mail. Request an immediate, joint inspection of the damage with the carrier and the consignee.
- Notify the Trane sales representative and arrange for repair. Do not repair the unit, however, until damage is inspected by the carrier's representative.

## Unit Storage

If the chiller is to be stored in ambients of 32°F or less, evaporator should be blown out to remove any liquid and refrigerant isolation valves should be closed.

If the chiller is to be stored for more than one month prior to installation, observe the following precautions:

- Do not remove the protective coverings from the electrical panel.
- Store the chiller in a secure area.
- Units charged with refrigerant should not be stored where temperatures exceed 140°F.
- At least every three months, attach a gauge and manually check the pressure in the refrigerant circuit. If the refrigerant pressure is below 200 psig at 70° F (or 145 psig at 50° F), call a qualified service organization and the appropriate Trane sales office.

***Note:*** *Pressure will be approximately 20 psig if shipped with the optional nitrogen charge.*

## Installation Requirements

A list of the contractor responsibilities typically associated with the unit installation process is provided.

| Type | Trane Supplied | | Field Supplied Field Installed |
|---|---|---|---|
| | Trane Installed | Field Installed | |
| Foundation | | | • Meet foundation requirements |
| Rigging | | | • Safety chains<br>• Clevis connectors<br>• Lifting beam |
| Isolation | | • Elastomeric isolators (optional) | • Elastomeric isolators (optional) |
| Electrical | • Circuit breakers (optional)<br>• Unit mounted starter | | • Circuit breakers (optional)<br>• Electrical connections to unit mounted starter<br>• Wiring sizes per submittal and NEC<br>• Terminal lugs<br>• Ground connection(s)<br>• BAS wiring (optional)<br>• Control voltage wiring<br>• Chilled water pump contactor and wiring including interlock<br>• Option relays and wiring |
| Water piping | • Flow switch<br>• Water strainer | | • Taps for thermometers and gauges<br>• Thermometers<br>• Water flow pressure gauges<br>• Isolation and balancing valves in water piping<br>• Vents and drain<br>• Pressure relief valves |
| Insulation | • Insulation<br>• High humidity insulation (optional) | | • Insulation |
| Water Piping Connection Components | • Grooved pipe | | |
| Other Materials | • R-410A refrigerant (1 lb. max per machine as needed)<br>• Dry nitrogen (20 psig max per machine as needed) | | |

# Dimensions and Weights

## Service Clearances

**Figure 8. CGAM service clearances**

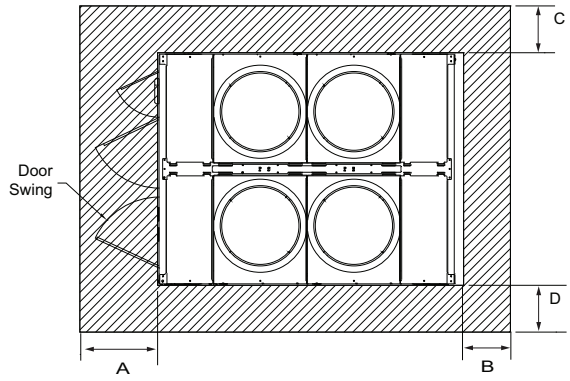


**Table 9. CGAM service clearance dimensions**

| Unit Size | A | | B | | C | | D | |
|---|---|---|---|---|---|---|---|---|
| | in | mm | in | mm | in | mm | in | mm |
| 20 to 35 ton | 47.2 | 1200 | 31.5 | 800 | 23.6 | 600 | 39.4 | 1000 |
| 40 to 70 ton | 47.2 | 1200 | 31.5 | 800 | 39.4 | 1000 | 39.4 | 1000 |
| 80 to 130 ton | 47.2 | 1200 | 39.4 | 1000 | 39.4 | 1000 | 39.4 | 1000 |

***Notes:***

- *Number of fans and panel doors shown does not represent the number of fans installed.*
- *More clearance may be needed for airflow, depending on installation.*

# Mounting Locations

***Important:*** *All mounting holes are 0.75 in (19mm) in diameter.*

## Unit without Wind Load Rating

***Note:*** *Mounting locations shown below are for units without wind load rating. For units with wind load rating (model number digit 17=D), additional mounting points are required. See* *"Units with Wind Load Rating," p. 29*.

**Figure 9. Mounting locations, 20 to 35 ton**

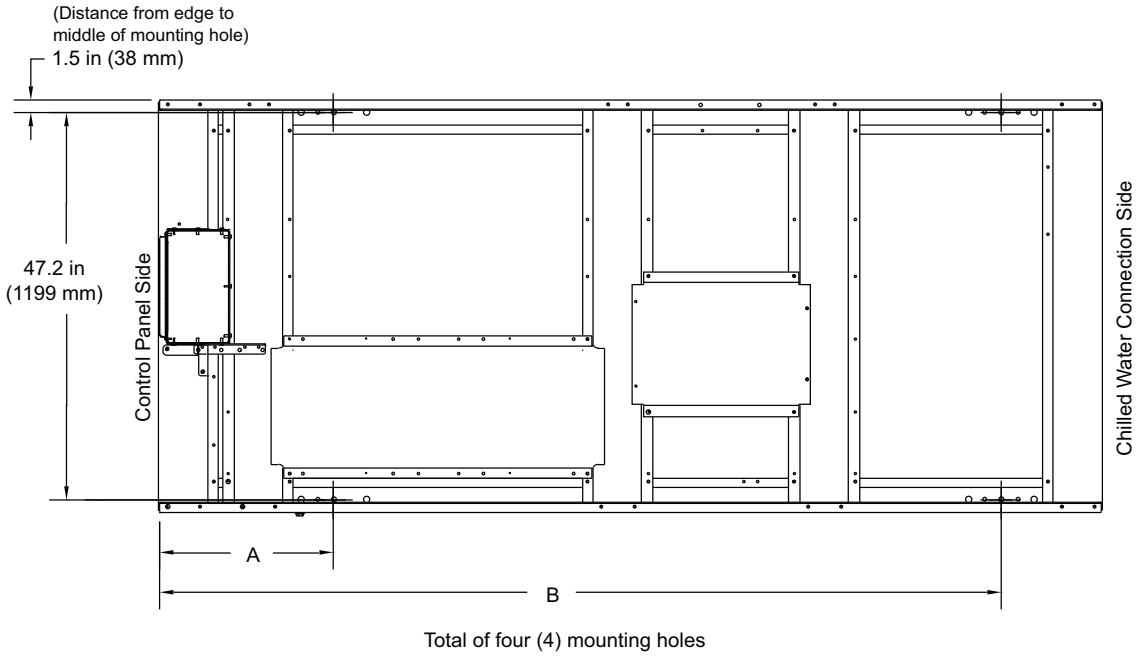


**Table 10. Mounting locations, 20 to 35 ton units without wind load option**

| Unit Size (tons) | A | | B | |
|---|---|---|---|---|
| | in | mm | in | mm |
| 20, 26 | 21.0 | 533 | 101.2 | 2570 |
| 30, 35 | 21.9 | 556 | 132.2 | 3358 |

**Figure 10. Mounting locations, 40 and 52 ton**

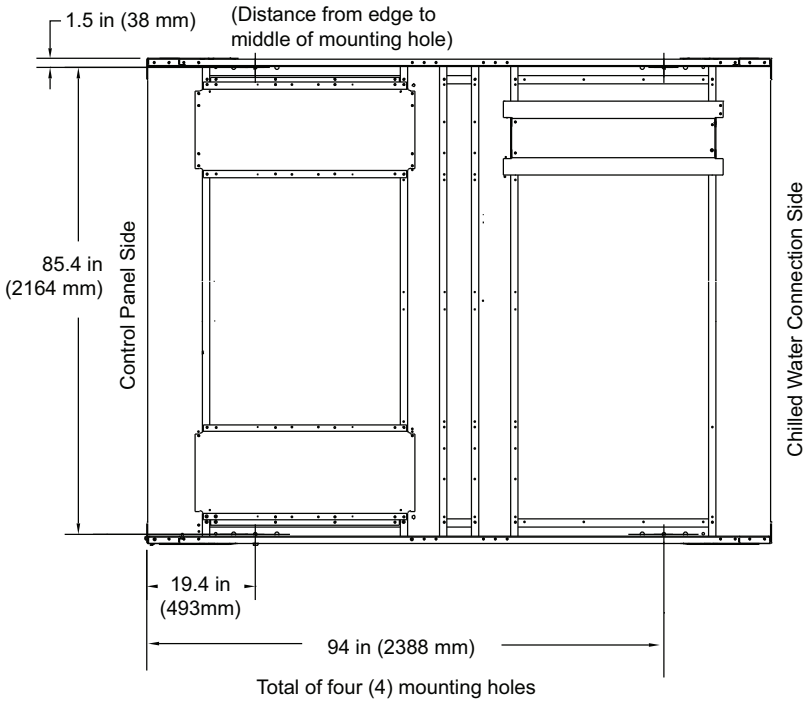


**Figure 11. Mounting locations, 60 and 70 ton**

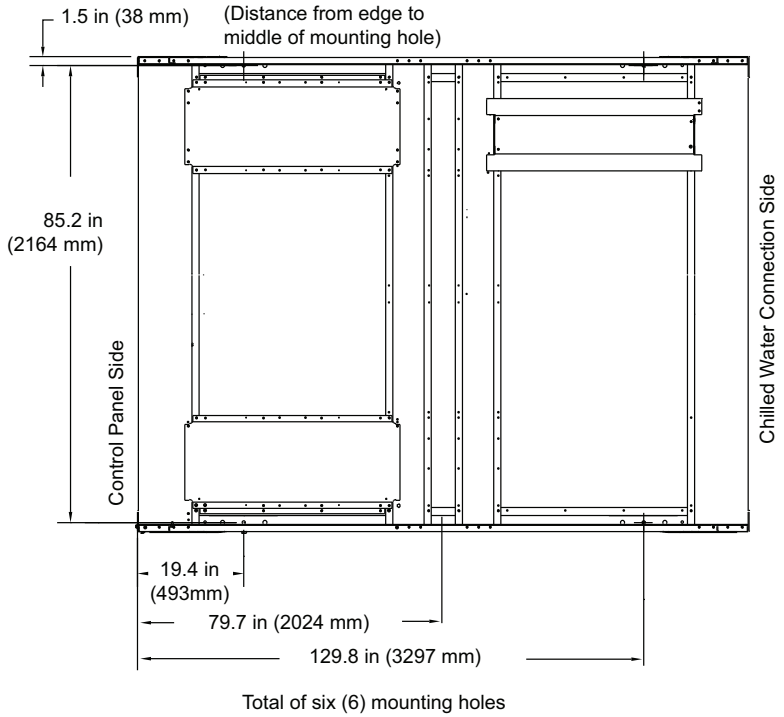

**Figure 12. Mounting locations, 80 to 120 ton**

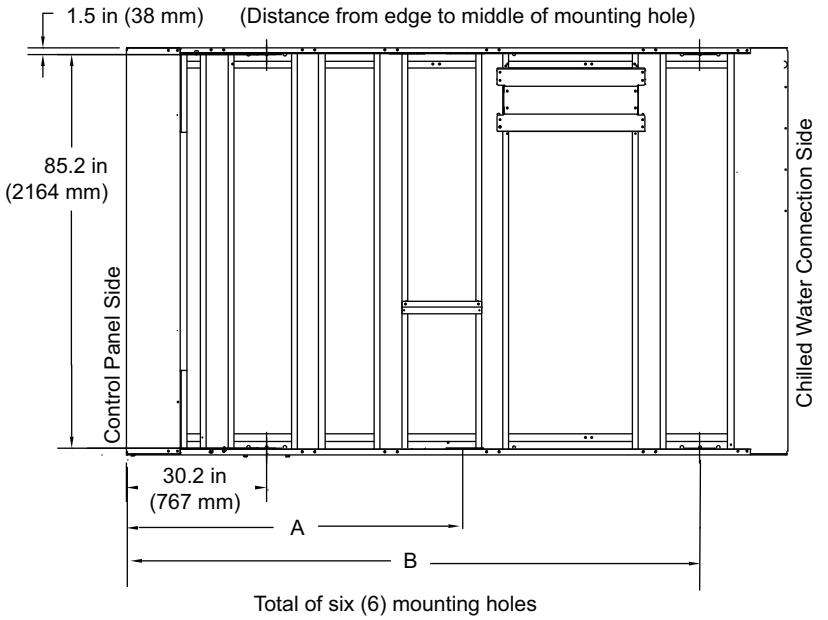


**Table 11. Mounting locations, 80 to 120 ton units without wind load option**

| Unit Size (tons) | A | | B | |
|---|---|---|---|---|
| | in | mm | in | mm |
| 80, 90 | 83.7 | 2126 | 123.9 | 3147 |
| 100, 110, 120 | 89.2 | 2266 | 146.9 | 3731 |

**Figure 13. Mounting locations, 130 ton**

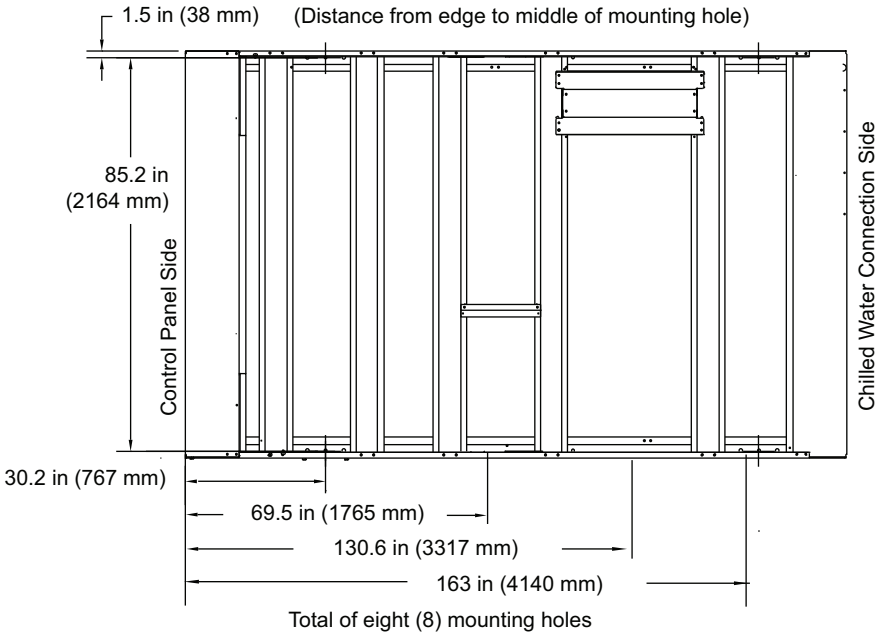

## Units with Wind Load Rating

For units with wind load rating (model number digit 17 = D), additional mounting points are required as shown below.

***Important:*** *All mounting points in previous section remain the same*

**Figure 14. Additional mounting locations for 40 and 52 ton units with wind load option**

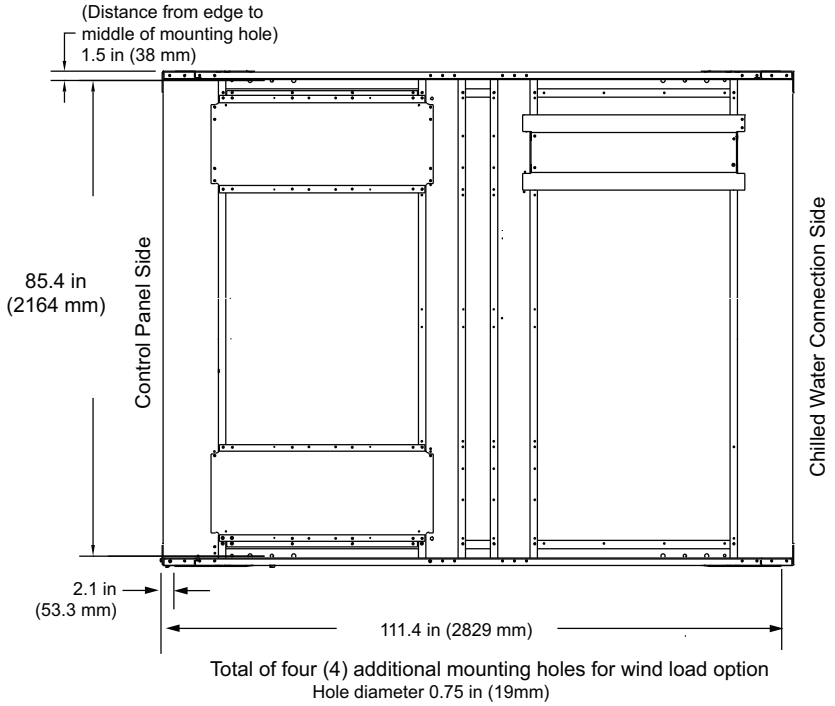


**Figure 15. Additional mounting locations for 60 and 70 ton units with wind load option**

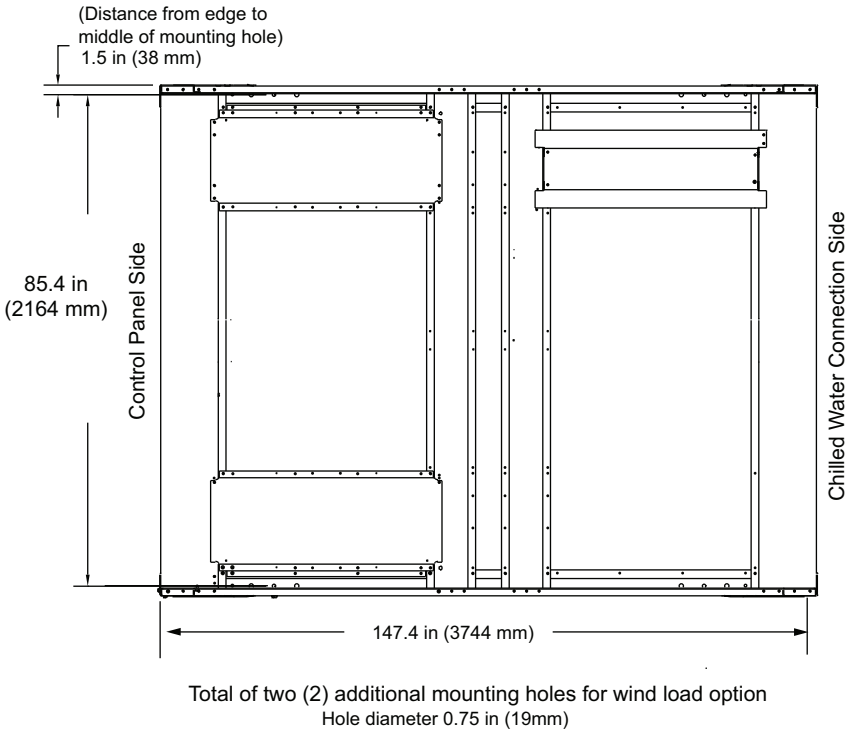

**Figure 16. Additional mounting locations for 80 to 130 ton units with wind load option**

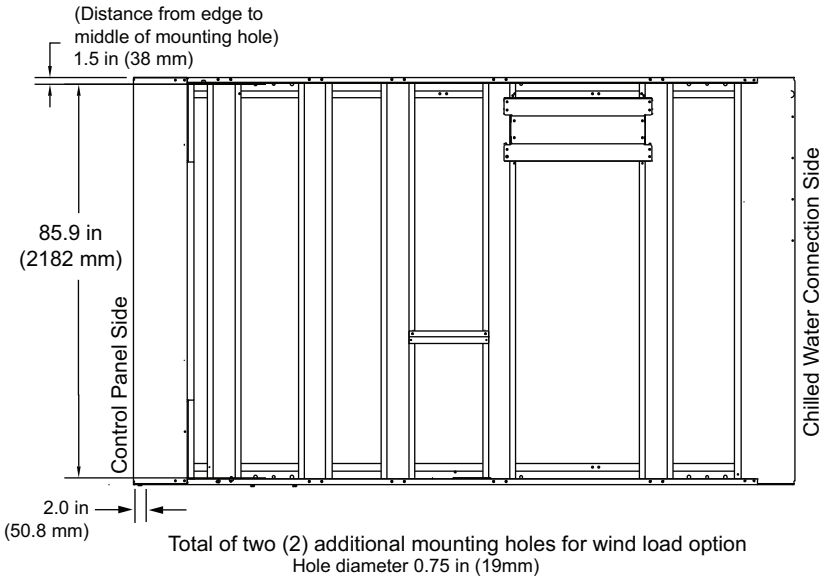

# Weights

## Base Units

### Round Tube and Plate Fin Condenser Coils

***Notes:***

- *Base unit weights include aluminum fins, refrigerant charge, elastomeric isolators, circuit breakers and louvers.*
- *For units with microchannel condenser coils, see "Microchannel Condenser Coils," p. 34.*
- *These weights do NOT include the following options: partial heat recovery, copper fins or seismic isolators. See "Option Weights," p. 36 for additional weight added by these option selections.*

**Table 12. Base unit weights, 60 Hz, round tube and plate fin condenser — I-P (lb)**

| Unit Size (Tons) | Base Unit | | Base Unit With Pump Package | | Base Unit With Pump Package and Buffer Tank | |
|---|---|---|---|---|---|---|
| | Shipping | Operating | Shipping | Operating | Shipping | Operating |
| **High Efficiency** | | | | | | |
| **20** | 2185 | 2208 | 2726 | 2814 | 3252 | 4491 |
| **26** | 2249 | 2278 | 2790 | 2891 | 3317 | 4562 |
| **30** | 2846 | 2880 | 3388 | 3497 | 3915 | 5163 |
| **35** | 2878 | 2920 | 3420 | 3546 | 3947 | 5204 |
| **40** | 3666 | 3697 | 4285 | 4383 | 4876 | 6116 |
| **52** | 3761 | 3806 | 4379 | 4506 | 4971 | 6225 |
| **60** | 4978 | 5033 | 5814 | 5986 | 6406 | 7695 |
| **70** | 5045 | 5121 | 5881 | 6094 | 6473 | 7782 |
| **80** | 5607 | 5692 | 6486 | 6790 | 7077 | 8561 |
| **90** | 5859 | 5961 | 6738 | 7075 | 7329 | 8830 |
| **100** | 6646 | 6759 | 7549 | 7909 | 8265 | 10136 |
| **110** | 6724 | 6846 | 7627 | 8005 | 8343 | 10223 |
| **120** | 6762 | 6884 | 8018 | 8396 | 8733 | 10614 |
| **130** | 7753 | 7900 | 9006 | 9430 | 9722 | 11623 |
| **Extra Efficiency** | | | | | | |
| **20** | 2258 | 2281 | 2798 | 2887 | 3325 | 4564 |
| **26** | 2322 | 2351 | 2863 | 2964 | 3389 | 4634 |
| **30** | 2945 | 2979 | 3487 | 3596 | 4014 | 5262 |
| **35** | 3023 | 3065 | 3565 | 3691 | 4092 | 5349 |
| **40** | 3812 | 3843 | 4431 | 4529 | 5022 | 6262 |
| **52** | 3959 | 4004 | 4578 | 4705 | 5169 | 6423 |
| **60** | 5177 | 5232 | 6013 | 6184 | 6604 | 7893 |
| **70** | 5118 | 5194 | 5954 | 6166 | 6545 | 7855 |
| **110** | 6724 | 6846 | 7627 | 8005 | 8343 | 10223 |
| **120** | 6762 | 6884 | 8018 | 8396 | 8733 | 10614 |

**Note:** All weights ±3%.

**Table 13. Base unit weights, 60 Hz, round tube and plate fin condenser — SI (kg)**

| Unit Size (Tons) | Base Unit | | Base Unit With Pump Package | | Base Unit With Pump Package and Buffer Tank | |
|---|---|---|---|---|---|---|
| | Shipping | Operating | Shipping | Operating | Shipping | Operating |
| **High Efficiency** | | | | | | |
| **20** | 991 | 1002 | 1236 | 1277 | 1475 | 2037 |
| **26** | 1020 | 1034 | 1265 | 1311 | 1504 | 2069 |
| **30** | 1291 | 1306 | 1537 | 1586 | 1776 | 2342 |
| **35** | 1305 | 1325 | 1551 | 1608 | 1790 | 2360 |
| **40** | 1663 | 1677 | 1944 | 1988 | 2212 | 2774 |
| **52** | 1706 | 1726 | 1987 | 2044 | 2255 | 2824 |
| **60** | 2258 | 2283 | 2637 | 2715 | 2906 | 3490 |
| **70** | 2289 | 2323 | 2668 | 2764 | 2936 | 3530 |
| **80** | 2543 | 2582 | 2942 | 3080 | 3210 | 3883 |
| **90** | 2658 | 2704 | 3056 | 3209 | 3324 | 4005 |
| **100** | 3015 | 3066 | 3424 | 3587 | 3749 | 4598 |
| **110** | 3050 | 3105 | 3460 | 3631 | 3784 | 4637 |
| **120** | 3067 | 3122 | 3637 | 3808 | 3961 | 4814 |
| **130** | 3517 | 3583 | 4085 | 4277 | 4410 | 5272 |
| **Extra Efficiency** | | | | | | |
| **20** | 1024 | 1035 | 1269 | 1310 | 1508 | 2070 |
| **26** | 1053 | 1066 | 1298 | 1344 | 1537 | 2102 |
| **30** | 1336 | 1351 | 1582 | 1631 | 1821 | 2387 |
| **35** | 1371 | 1390 | 1617 | 1674 | 1856 | 2426 |
| **40** | 1729 | 1743 | 2010 | 2054 | 2278 | 2840 |
| **52** | 1796 | 1816 | 2077 | 2134 | 2345 | 2914 |
| **60** | 2348 | 2373 | 2727 | 2805 | 2996 | 3580 |
| **70** | 2322 | 2356 | 2701 | 2797 | 2969 | 3563 |
| **110** | 3050 | 3105 | 3460 | 3631 | 3784 | 4637 |
| **120** | 3067 | 3122 | 3637 | 3808 | 3961 | 4814 |

**Note:** All weights ±3%.

**Table 14. Base unit weights, 50 Hz, round tube and plate fin condenser**

| Unit Size (Tons) | I-P Units (lb) | | SI Units (kg) | |
|---|---|---|---|---|
| | Shipping | Operating | Shipping | Operating |
| **High Efficiency** | | | | |
| **20** | 2187 | 2210 | 992 | 1002 |
| **26** | 2249 | 2278 | 1020 | 1034 |
| **30** | 2846 | 2880 | 1291 | 1306 |
| **35** | 2878 | 2920 | 1305 | 1325 |
| **40** | 3666 | 3697 | 1663 | 1677 |
| **52** | 3761 | 3806 | 1706 | 1726 |
| **60** | 4978 | 5033 | 2258 | 2283 |
| **70** | 5045 | 5121 | 2289 | 2323 |
| **80** | 5607 | 5692 | 2543 | 2582 |
| **90** | 5858 | 5960 | 2657 | 2703 |
| **100** | 6630 | 6743 | 3007 | 3059 |
| **110** | 6713 | 6835 | 3045 | 3100 |
| **120** | 6758 | 6880 | 3065 | 3121 |
| **Extra Efficiency** | | | | |
| **20** | 2260 | 2283 | 1025 | 1035 |
| **26** | 2322 | 2351 | 1053 | 1066 |
| **30** | 2945 | 2979 | 1336 | 1351 |
| **35** | 3023 | 3065 | 1371 | 1390 |
| **40** | 3812 | 3843 | 1729 | 1743 |
| **52** | 3959 | 4004 | 1796 | 1816 |
| **60** | 5177 | 5232 | 2348 | 2373 |
| **70** | 5118 | 5194 | 2322 | 2356 |
| **110** | 6713 | 6835 | 3045 | 3100 |
| **120** | 6758 | 6880 | 3065 | 3121 |

**Note:** All weights ±3%.

## Microchannel Condenser Coils

***Notes:***

- *Base unit weights include refrigerant charge, isolators, circuit breakers and louvers.*
- *For units with round tube and plate fin condensers, see "Round Tube and Plate Fin Condenser Coils," p. 31.*

**Table 15. Base unit weights, 60 Hz, microchannel condenser — I-P (lb)**

| Unit Size (Tons) | Base Unit | | Base Unit With Pump Package | | Base Unit With Pump Package and Buffer Tank | |
|---|---|---|---|---|---|---|
| | Shipping | Operating | Shipping | Operating | Shipping | Operating |
| High Efficiency | | | | | | |
| **20** | 1967 | 1975 | 2507 | 2582 | 3034 | 4259 |
| **26** | 2030 | 2046 | 2571 | 2659 | 3098 | 4329 |
| **30** | 2388 | 2403 | 2929 | 3021 | 3456 | 4686 |
| **35** | 2608 | 2630 | 3150 | 3256 | 3677 | 4914 |
| **40** | 3307 | 3314 | 3926 | 3999 | 4517 | 5732 |
| **52** | 3402 | 3422 | 4021 | 4122 | 4612 | 5840 |
| **60** | 4136 | 4156 | 4972 | 5108 | 5563 | 6817 |
| **70** | 4579 | 4616 | 5415 | 5589 | 6006 | 7278 |
| **80** | 4888 | 4899 | 5766 | 5996 | 6357 | 7768 |
| **90** | 5141 | 5163 | 6020 | 6277 | 6611 | 8032 |
| **100** | 5816 | 5838 | 6719 | 6988 | 7434 | 9215 |
| **110** | 5893 | 5924 | 6796 | 7083 | 7511 | 9301 |
| **120** | 5930 | 5966 | 7186 | 7477 | 7902 | 9696 |
| **130** | 6722 | 6757 | 7976 | 8287 | 8691 | 10480 |

**Note:** All weights ±3%.

**Table 16. Base unit weights, 60 Hz, microchannel condenser — SI (kg)**

| Unit Size (Tons) | Base Unit | | Base Unit With Pump Package | | Base Unit With Pump Package and Buffer Tank | |
|---|---|---|---|---|---|---|
| | Shipping | Operating | Shipping | Operating | Shipping | Operating |
| High Efficiency | | | | | | |
| **20** | 892 | 896 | 1137 | 1171 | 1376 | 1932 |
| **26** | 921 | 928 | 1166 | 1206 | 1405 | 1964 |
| **30** | 1083 | 1090 | 1329 | 1370 | 1568 | 2126 |
| **35** | 1183 | 1193 | 1429 | 1477 | 1668 | 2229 |
| **40** | 1500 | 1503 | 1781 | 1814 | 2049 | 2600 |
| **52** | 1543 | 1552 | 1824 | 1870 | 2092 | 2649 |
| **60** | 1876 | 1885 | 2255 | 2317 | 2523 | 3092 |
| **70** | 2077 | 2094 | 2456 | 2535 | 2724 | 3301 |
| **80** | 2217 | 2222 | 2616 | 2720 | 2884 | 3523 |
| **90** | 2332 | 2342 | 2731 | 2847 | 2999 | 3643 |
| **100** | 2638 | 2648 | 3048 | 3170 | 3372 | 4180 |
| **110** | 2673 | 2687 | 3083 | 3213 | 3407 | 4219 |
| **120** | 2690 | 2706 | 3260 | 3392 | 3584 | 4398 |
| **130** | 3049 | 3065 | 3618 | 3759 | 3942 | 4754 |

**Note:** All weights ±3%.

**Table 17. Base unit weights, 50 Hz, microchannel condenser**

| Unit Size (Tons) | I-P (lb) | | SI (kg) | |
|---|---|---|---|---|
| | Shipping | Operating | Shipping | Operating |
| **High Efficiency** | | | | |
| **20** | 1967 | 1978 | 892 | 897 |
| **26** | 2030 | 2046 | 921 | 928 |
| **30** | 2388 | 2403 | 1083 | 1090 |
| **35** | 2608 | 2630 | 1183 | 1193 |
| **40** | 3307 | 3314 | 1500 | 1503 |
| **52** | 3402 | 3422 | 1543 | 1552 |
| **60** | 4136 | 4156 | 1876 | 1885 |
| **70** | 4579 | 4616 | 2077 | 2094 |
| **80** | 4888 | 4899 | 2217 | 2222 |
| **90** | 5139 | 5163 | 2331 | 2342 |
| **100** | 5798 | 5822 | 2630 | 2641 |
| **110** | 5882 | 5913 | 2668 | 2682 |
| **120** | 5926 | 5961 | 2688 | 2704 |

**Note:** All weights ±3%.

## Option Weights

***Note:*** *Weights listed below are in addition to base unit weights found in previous section. For total unit weight, add option weights to base unit weight found in "Round Tube and Plate Fin Condenser Coils," p. 31.*

**Table 18. Option weights, 60 Hz, round tube and plate fin condenser**

| Unit Size (tons) | I-P Units (lb) | | | | SI Units (kg) | | | |
|---|---|---|---|---|---|---|---|---|
| | Partial Heat Recovery | | Copper Fins | Seismic Isolator | Partial Heat Recovery | | Copper Fins | Seismic Isolator |
| | Shipping | Operating | | | Shipping | Operating | | |
| **High Efficiency** | | | | | | | | |
| **20** | 39 | 63 | 258 | 160 | 18 | 28 | 117 | 73 |
| **26** | 39 | 70 | 258 | 160 | 18 | 32 | 117 | 73 |
| **30** | 47 | 82 | 359 | 160 | 21 | 37 | 163 | 73 |
| **35** | 47 | 91 | 359 | 160 | 21 | 41 | 163 | 73 |
| **40** | 94 | 128 | 516 | 160 | 43 | 58 | 234 | 73 |
| **52** | 94 | 143 | 516 | 160 | 43 | 65 | 234 | 73 |
| **60** | 111 | 170 | 719 | 240 | 50 | 77 | 326 | 109 |
| **70** | 111 | 191 | 719 | 240 | 50 | 87 | 326 | 109 |
| **80** | 170 | 260 | 1270 | 240 | 77 | 118 | 576 | 109 |
| **90** | 170 | 279 | 1270 | 240 | 77 | 126 | 576 | 109 |
| **100** | 178 | 298 | 1512 | 240 | 81 | 135 | 686 | 109 |
| **110** | 178 | 307 | 1512 | 240 | 81 | 139 | 686 | 109 |
| **120** | 178 | 310 | 1512 | 240 | 81 | 140 | 686 | 109 |
| **130** | 178 | 335 | 1889 | 320 | 81 | 152 | 857 | 145 |
| **Extra Efficiency** | | | | | | | | |
| **20** | 39 | 63 | 258 | - | 18 | 28 | 117 | - |
| **26** | 39 | 70 | 258 | - | 18 | 32 | 117 | - |
| **30** | 47 | 82 | 360 | - | 21 | 37 | 163 | - |
| **35** | 47 | 91 | 360 | - | 21 | 41 | 163 | - |
| **40** | 94 | 128 | 516 | - | 43 | 58 | 234 | - |
| **52** | 94 | 143 | 516 | - | 43 | 65 | 234 | - |
| **60** | 111 | 170 | 720 | - | 50 | 77 | 326 | - |
| **70** | 111 | 191 | 720 | - | 50 | 87 | 326 | - |
| **110** | 178 | 307 | 1512 | - | 81 | 139 | 686 | - |
| **120** | 178 | 310 | 1512 | - | 81 | 140 | 686 | - |

**Note:** All weights ±3%.

**Table 19. Option weights, 50 Hz, round tube and plate fin condenser**

| Unit Size (tons) | I-P Units (lb) | | | | SI Units (kg) | | | |
|---|---|---|---|---|---|---|---|---|
| | Partial Heat Recovery | | | Seismic Isolator | Partial Heat Recovery | | | Seismic Isolator |
| | Shipping | Operating | Copper Fins | | Shipping | Operating | Copper Fins | |
| **High Efficiency** | | | | | | | | |
| **20** | 40 | 24 | 258 | 160 | 18 | 11 | 117 | 73 |
| **26** | 40 | 31 | 258 | 160 | 18 | 14 | 117 | 73 |
| **30** | 46 | 35 | 359 | 160 | 21 | 16 | 163 | 73 |
| **35** | 46 | 44 | 359 | 160 | 21 | 20 | 163 | 73 |
| **40** | 95 | 33 | 516 | 160 | 43 | 15 | 234 | 73 |
| **52** | 95 | 49 | 516 | 160 | 43 | 20 | 234 | 73 |
| **60** | 110 | 60 | 719 | 240 | 50 | 27 | 326 | 109 |
| **70** | 110 | 79 | 719 | 240 | 50 | 36 | 326 | 109 |
| **80** | 170 | 90 | 1270 | 240 | 77 | 41 | 576 | 109 |
| **90** | 170 | 108 | 1270 | 240 | 77 | 49 | 576 | 109 |
| **100** | 179 | 119 | 1512 | 240 | 81 | 54 | 686 | 109 |
| **110** | 179 | 130 | 1512 | 240 | 81 | 59 | 686 | 109 |
| **120** | 179 | 130 | 1512 | 240 | 81 | 59 | 686 | 109 |
| **Extra Efficiency** | | | | | | | | |
| **20** | 40 | 24 | 258 | - | 18 | 11 | 117 | - |
| **26** | 40 | 31 | 258 | - | 18 | 14 | 117 | - |
| **30** | 46 | 35 | 359 | - | 21 | 16 | 163 | - |
| **35** | 46 | 44 | 359 | - | 21 | 20 | 163 | - |
| **40** | 95 | 33 | 516 | - | 43 | 15 | 234 | - |
| **52** | 95 | 49 | 516 | - | 43 | 22 | 234 | - |
| **60** | 110 | 60 | 719 | - | 50 | 27 | 326 | - |
| **70** | 110 | 79 | 719 | - | 50 | 36 | 326 | - |
| **110** | 179 | 130 | 1512 | - | 81 | 59 | 686 | - |
| **120** | 179 | 130 | 1512 | - | 81 | 59 | 686 | - |

**Note:** All weights ±3%.

# Installation - Mechanical

## Location Requirements

### Sound Considerations

- Refer to *Trane Engineering Bulletin Chiller Sound Ratings and Installation Guide* CG-PRB010-EN for sound consideration applications.
- Locate the unit away from sound-sensitive areas.
- Install the optional elastomeric isolators under the unit. See "Unit Isolation and Leveling," p. 45.
- Chilled water piping should not be supported by chiller frame.
- Install rubber vibration isolators in all water piping.
- Seal all wall penetrations.

***Note:*** *Consult an acoustical engineer for critical applications.*

### Wind Load Considerations

For units with wind load certification and architectural louvered panels (model number digit 17 = D), refer to Technical Evaluation Report listed below for necessary storm preparation.

| Unit Size (tons) | TER |
|---|---|
| 40 to 70 | TER-15-2904V |
| 80 to 130 | TER-15-2904W |

### Foundation

Provide rigid, non-warping mounting pads or a concrete foundation of sufficient strength and mass to support the applicable operating weight (i.e. including completed piping, and full operating charges of refrigerant, oil and water). The expectation for our equipment is that attached piping is fully supported by an independent structure/system, without being connected to the braze plate heat exchanger. Once in place, the unit must be level within 1/2" (12.7 mm) across the length and width of the unit. Trane is not responsible for equipment problems resulting from an improperly designed or constructed foundation.

### Clearances

Provide enough space around the unit to allow the installation and maintenance personnel unrestricted access to all service points. Refer to submittal drawings for the unit dimensions, to provide sufficient clearance for the opening of control panel doors and unit service. See "Service Clearances," p. 25 for minimum clearances. In all cases, local codes which require additional clearances will take precedence over these recommendations.

## Rigging

See "Weights," p. 31 for typical unit lifting weights. Refer to the rigging label attached to the unit for further details.

### Lifting Procedure

**⚠WARNING**

**Heavy Objects!**

**Failure to follow instructions below or properly lift unit could result in unit dropping and possibly crushing operator/technician which could result in death or serious injury, and equipment or property-only damage. Ensure that all the lifting equipment used is properly rated for the weight of the unit being lifted. Each of the cables (chains or slings), hooks, and shackles used to lift the unit must be capable of supporting the entire weight of the unit. Lifting cables (chains or slings) may not be of the same length. Adjust as necessary for even unit lift.**

**⚠WARNING**

**Improper Unit Lift!**

**Failure to properly lift unit could result in unit dropping and possibly crushing operator/technician which could result in death or serious injury, and equipment or property-only damage. Test lift unit approximately 24 inches to verify proper center of gravity lift point. To avoid dropping of unit, reposition lifting point if unit is not level.**

***NOTICE:***

**Equipment Damage!**

**To prevent damage to unit, do not fork lift or allow lifting cables to contact unit during lift.**

Lifting using either a single spreader bar or an H-type spreader is acceptable. Attach chains or cables to lifting beam. Lifting beam crossbars **MUST** be positioned so lifting cables do not contact the sides of the unit.

***Important:*** *The center of gravity (CG) is never at the midpoint of the base rail lifting strap holes. A level unit lift is required for a safe lift and to prevent unit damage.*

Lifting a unit with equal length straps will NOT produce a level unit during the lift because the CG will not be at the midpoint between the base lifting holes. The following adjustments must be made to produce a level lift:

- Single spreader bar lifting method
  - If the unit CG is closer to the control panel, the straps on the control panel side of the spreader bar must be adjusted to be shorter than those on the opposite side of the spreader bar, allowing the spreader bar to move toward the control panel and over the unit CG. Several adjustments of the strap length may be required to produce a level unit during lift.

- H-type spreader bar lifting method
  - If the straps from the H bar to the unit base are the same length, the crane lifting point on the center web of the H bar must be adjusted to produce a level unit lift. See Figure 17, p. 39 for illustration.

**Figure 17. H-type spreader bar adjustment for level unit lift**

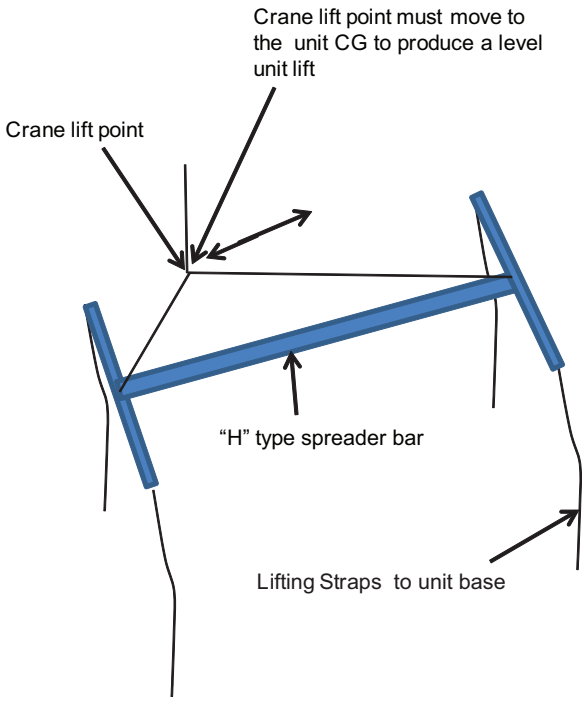


**Figure 18. CGAM slant 20 to 35 ton unit rigging**

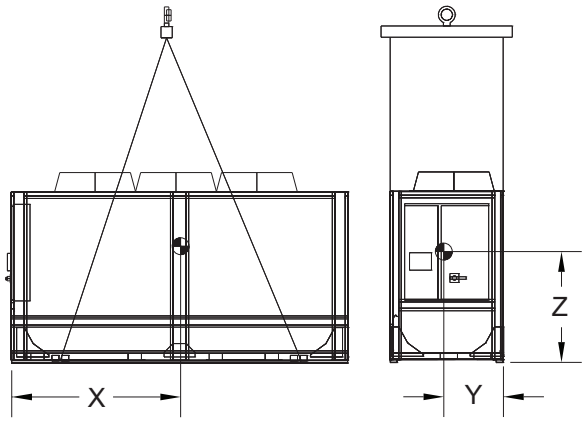


**Figure 19. CGAM V 40 to 70 ton unit rigging**

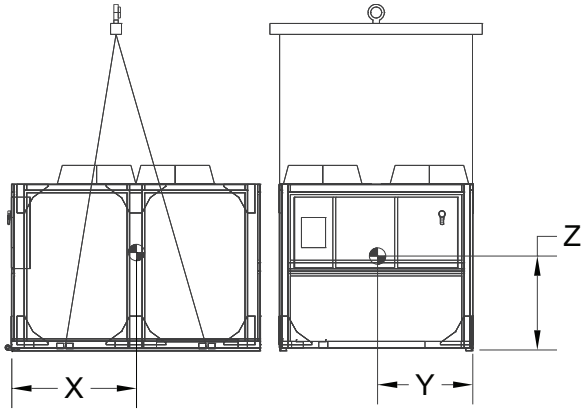


**Figure 20. CGAM W 80 to 130 ton unit rigging**

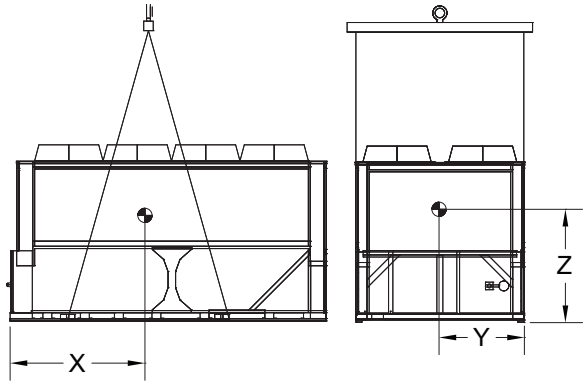

## Center of Gravity

***Note:*** *Center of gravity values do not change if wind load option is selected.*

### Units with Round Tube and Plate Fin (RTPF) Condenser

**Table 20. Center of gravity (in) — RTPF condenser, 60 Hz, high efficiency**

| Unit (tons) | Aluminum fins | | | | | | | | | Copper fins | | | | | | | | |
|---|---|---|---|---|---|---|---|---|---|---|---|---|---|---|---|---|---|---|
| | Base Unit | | | With Pump Package | | | With Pump Pkg, Buffer Tank | | | Base Unit | | | With Pump Package | | | With Pump Pkg, Buffer Tank | | |
| | X | Y | Z | X | Y | Z | X | Y | Z | X | Y | Z | X | Y | Z | X | Y | Z |
| **Units without Partial Heat Recovery** | | | | | | | | | | | | | | | | | | |
| **20** | 50 | 24 | 38 | 56 | 23 | 34 | 67 | 23 | 35 | 51 | 24 | 39 | 57 | 23 | 35 | 67 | 23 | 35 |
| **26** | 49 | 24 | 38 | 56 | 23 | 33 | 67 | 23 | 34 | 51 | 24 | 39 | 57 | 23 | 34 | 67 | 23 | 35 |
| **30** | 65 | 24 | 39 | 73 | 23 | 35 | 86 | 23 | 36 | 67 | 24 | 40 | 74 | 23 | 36 | 85 | 23 | 37 |
| **35** | 63 | 23 | 38 | 72 | 22 | 34 | 84 | 23 | 35 | 65 | 23 | 39 | 73 | 23 | 35 | 83 | 23 | 36 |
| **40** | 48 | 45 | 37 | 53 | 42 | 34 | 62 | 43 | 35 | 50 | 45 | 38 | 53 | 42 | 35 | 61 | 43 | 36 |
| **52** | 49 | 45 | 37 | 53 | 43 | 34 | 61 | 43 | 34 | 50 | 45 | 38 | 53 | 43 | 35 | 61 | 43 | 35 |
| **60** | 64 | 45 | 39 | 69 | 43 | 36 | 78 | 43 | 36 | 65 | 45 | 40 | 69 | 43 | 37 | 78 | 43 | 37 |
| **70** | 62 | 46 | 37 | 67 | 43 | 35 | 75 | 43 | 35 | 63 | 45 | 38 | 67 | 43 | 36 | 75 | 43 | 36 |
| **80** | 59 | 47 | 38 | 68 | 46 | 37 | 68 | 46 | 35 | 62 | 46 | 42 | 69 | 46 | 41 | 68 | 46 | 39 |
| **90** | 59 | 47 | 37 | 68 | 46 | 36 | 67 | 46 | 34 | 61 | 46 | 41 | 68 | 46 | 40 | 68 | 46 | 38 |
| **100** | 72 | 47 | 38 | 82 | 46 | 37 | 81 | 46 | 35 | 75 | 46 | 42 | 82 | 46 | 41 | 81 | 46 | 39 |
| **110** | 72 | 47 | 38 | 81 | 46 | 37 | 80 | 46 | 35 | 74 | 46 | 42 | 81 | 46 | 41 | 81 | 46 | 39 |
| **120** | 72 | 47 | 38 | 83 | 46 | 36 | 82 | 46 | 35 | 74 | 46 | 42 | 83 | 46 | 40 | 83 | 46 | 38 |
| **130** | 86 | 47 | 39 | 100 | 46 | 38 | 100 | 46 | 36 | 89 | 46 | 44 | 100 | 46 | 42 | 101 | 46 | 40 |
| **Units with Partial Heat Recovery** | | | | | | | | | | | | | | | | | | |
| **20** | 50 | 24 | 38 | 57 | 23 | 33 | 67 | 23 | 34 | 52 | 24 | 39 | 57 | 23 | 35 | 67 | 24 | 35 |
| **26** | 50 | 24 | 37 | 56 | 23 | 33 | 67 | 23 | 34 | 51 | 24 | 38 | 57 | 23 | 34 | 67 | 23 | 35 |
| **30** | 65 | 24 | 39 | 73 | 23 | 35 | 86 | 24 | 35 | 67 | 24 | 40 | 74 | 23 | 36 | 85 | 24 | 36 |
| **35** | 63 | 23 | 37 | 71 | 23 | 34 | 83 | 23 | 34 | 65 | 23 | 38 | 73 | 23 | 35 | 83 | 23 | 35 |
| **40** | 50 | 45 | 37 | 54 | 42 | 34 | 62 | 43 | 35 | 51 | 45 | 38 | 54 | 43 | 35 | 62 | 43 | 36 |
| **52** | 50 | 45 | 37 | 54 | 43 | 34 | 62 | 43 | 35 | 51 | 45 | 38 | 54 | 43 | 35 | 62 | 43 | 35 |
| **60** | 65 | 45 | 40 | 70 | 43 | 36 | 79 | 43 | 37 | 67 | 45 | 40 | 71 | 43 | 37 | 79 | 43 | 37 |
| **70** | 63 | 46 | 38 | 68 | 43 | 35 | 76 | 43 | 35 | 65 | 45 | 38 | 69 | 43 | 36 | 76 | 43 | 36 |
| **80** | 58 | 47 | 38 | 67 | 46 | 37 | 67 | 46 | 35 | 61 | 46 | 42 | 68 | 46 | 41 | 67 | 46 | 39 |
| **90** | 58 | 47 | 37 | 67 | 46 | 36 | 66 | 46 | 35 | 60 | 46 | 41 | 67 | 46 | 40 | 67 | 46 | 39 |
| **100** | 71 | 47 | 38 | 80 | 46 | 37 | 79 | 46 | 35 | 73 | 46 | 42 | 81 | 46 | 41 | 80 | 46 | 39 |
| **110** | 71 | 47 | 38 | 80 | 46 | 37 | 79 | 46 | 35 | 73 | 46 | 42 | 80 | 46 | 41 | 80 | 46 | 39 |
| **120** | 70 | 47 | 38 | 82 | 46 | 36 | 81 | 46 | 35 | 73 | 46 | 42 | 82 | 46 | 40 | 82 | 46 | 39 |
| **130** | 84 | 46 | 39 | 98 | 46 | 38 | 99 | 46 | 36 | 88 | 46 | 44 | 99 | 46 | 42 | 100 | 46 | 40 |

**Table 21. Center of gravity (in) — RTPF condenser, 60 Hz, extra efficiency**

| Unit (tons) | Aluminum fins | | | | | | | | | Copper fins | | | | | | | | |
|---|---|---|---|---|---|---|---|---|---|---|---|---|---|---|---|---|---|---|
| | Base Unit | | | With Pump Package | | | With Pump Pkg, Buffer Tank | | | Base Unit | | | With Pump Package | | | With Pump Pkg, Buffer Tank | | |
| | X | Y | Z | X | Y | Z | X | Y | Z | X | Y | Z | X | Y | Z | X | Y | Z |
| **Units without Partial Heat Recovery** | | | | | | | | | | | | | | | | | | |
| **20** | 50 | 24 | 39 | 57 | 23 | 34 | 67 | 23 | 35 | 52 | 24 | 40 | 58 | 23 | 36 | 67 | 23 | 36 |
| **26** | 50 | 24 | 38 | 56 | 23 | 34 | 67 | 23 | 35 | 52 | 24 | 39 | 57 | 23 | 35 | 67 | 23 | 36 |
| **30** | 65 | 24 | 39 | 74 | 23 | 35 | 86 | 23 | 36 | 68 | 24 | 41 | 75 | 23 | 37 | 85 | 23 | 37 |
| **35** | 64 | 23 | 38 | 72 | 23 | 34 | 83 | 23 | 35 | 67 | 23 | 39 | 73 | 23 | 36 | 83 | 23 | 36 |
| **40** | 49 | 45 | 37 | 53 | 42 | 34 | 61 | 43 | 35 | 50 | 45 | 38 | 54 | 43 | 36 | 61 | 43 | 36 |
| **52** | 49 | 45 | 37 | 53 | 43 | 34 | 61 | 43 | 35 | 50 | 45 | 38 | 54 | 43 | 35 | 61 | 43 | 36 |
| **60** | 64 | 45 | 40 | 69 | 43 | 36 | 78 | 43 | 37 | 66 | 45 | 40 | 70 | 43 | 38 | 77 | 43 | 38 |
| **70** | 62 | 45 | 38 | 67 | 43 | 35 | 75 | 43 | 35 | 64 | 45 | 39 | 68 | 43 | 36 | 75 | 44 | 36 |
| **110** | 72 | 47 | 38 | 81 | 46 | 37 | 80 | 46 | 35 | 74 | 46 | 42 | 81 | 46 | 41 | 81 | 46 | 39 |
| **120** | 72 | 47 | 38 | 83 | 46 | 36 | 82 | 46 | 35 | 74 | 46 | 42 | 83 | 46 | 40 | 83 | 46 | 38 |
| **Units with Partial Heat Recovery** | | | | | | | | | | | | | | | | | | |
| **20** | 51 | 24 | 38 | 57 | 23 | 34 | 67 | 23 | 35 | 53 | 24 | 39 | 58 | 23 | 35 | 67 | 24 | 36 |
| **26** | 50 | 24 | 38 | 56 | 23 | 33 | 67 | 23 | 34 | 52 | 24 | 39 | 57 | 23 | 35 | 67 | 23 | 35 |
| **30** | 65 | 24 | 39 | 74 | 23 | 35 | 86 | 24 | 36 | 68 | 24 | 40 | 75 | 23 | 37 | 85 | 24 | 37 |
| **35** | 64 | 23 | 37 | 72 | 23 | 34 | 83 | 23 | 35 | 67 | 24 | 39 | 73 | 23 | 36 | 83 | 23 | 36 |
| **40** | 50 | 45 | 38 | 54 | 42 | 35 | 62 | 43 | 35 | 51 | 45 | 39 | 55 | 43 | 36 | 62 | 43 | 36 |
| **52** | 50 | 45 | 37 | 54 | 43 | 34 | 62 | 43 | 35 | 51 | 45 | 38 | 55 | 43 | 36 | 61 | 43 | 36 |
| **60** | 66 | 45 | 40 | 70 | 43 | 37 | 79 | 43 | 37 | 68 | 45 | 40 | 71 | 43 | 38 | 78 | 43 | 38 |
| **70** | 64 | 45 | 38 | 68 | 43 | 35 | 76 | 43 | 35 | 66 | 45 | 39 | 69 | 43 | 36 | 76 | 44 | 37 |
| **110** | 71 | 47 | 38 | 80 | 46 | 37 | 79 | 46 | 35 | 73 | 46 | 42 | 80 | 46 | 41 | 80 | 46 | 39 |
| **120** | 70 | 47 | 38 | 82 | 46 | 36 | 81 | 46 | 35 | 73 | 46 | 42 | 82 | 46 | 40 | 82 | 46 | 39 |

**Table 22. Center of gravity (in) — RTPF condenser, 50 Hz, high efficiency**

| Unit (tons) | Aluminum fins | | | | | | | | | Copper fins | | | | | | | | |
|---|---|---|---|---|---|---|---|---|---|---|---|---|---|---|---|---|---|---|
| | Base Unit | | | With Pump Package | | | With Pump Pkg, Buffer Tank | | | Base Unit | | | With Pump Package | | | With Pump Pkg, Buffer Tank | | |
| | X | Y | Z | X | Y | Z | X | Y | Z | X | Y | Z | X | Y | Z | X | Y | Z |
| **Units without Partial Heat Recovery** | | | | | | | | | | | | | | | | | | |
| **20** | 49 | 24 | 38 | 54 | 23 | 35 | 66 | 23 | 35 | 51 | 24 | 39 | 55 | 23 | 36 | 66 | 23 | 36 |
| **26** | 49 | 24 | 38 | 54 | 23 | 34 | 66 | 23 | 35 | 51 | 24 | 39 | 55 | 23 | 35 | 66 | 23 | 36 |
| **30** | 65 | 24 | 39 | 71 | 23 | 36 | 84 | 23 | 36 | 67 | 24 | 40 | 72 | 23 | 37 | 84 | 24 | 37 |
| **35** | 63 | 23 | 38 | 69 | 23 | 35 | 82 | 23 | 35 | 65 | 23 | 39 | 71 | 23 | 36 | 82 | 23 | 36 |
| **40** | 48 | 45 | 37 | 52 | 43 | 35 | 61 | 43 | 35 | 50 | 45 | 38 | 52 | 43 | 36 | 60 | 43 | 36 |
| **52** | 49 | 45 | 37 | 52 | 43 | 34 | 61 | 43 | 35 | 50 | 45 | 38 | 53 | 43 | 35 | 60 | 43 | 36 |
| **60** | 64 | 45 | 39 | 69 | 43 | 36 | 78 | 43 | 36 | 65 | 45 | 40 | 70 | 43 | 37 | 78 | 43 | 37 |
| **70** | 62 | 46 | 37 | 67 | 43 | 34 | 76 | 43 | 35 | 63 | 45 | 38 | 68 | 43 | 35 | 76 | 43 | 36 |
| **80** | 59 | 47 | 38 | 68 | 46 | 37 | 67 | 46 | 35 | 62 | 46 | 42 | 69 | 46 | 41 | 68 | 46 | 39 |
| **90** | 59 | 47 | 37 | 67 | 46 | 36 | 67 | 46 | 35 | 61 | 46 | 41 | 68 | 46 | 40 | 67 | 46 | 38 |
| **100** | 72 | 47 | 38 | 81 | 46 | 37 | 80 | 46 | 35 | 74 | 46 | 42 | 81 | 46 | 41 | 80 | 46 | 39 |
| **110** | 72 | 47 | 38 | 81 | 46 | 37 | 80 | 46 | 35 | 74 | 46 | 42 | 81 | 46 | 41 | 80 | 46 | 39 |
| **120** | 72 | 47 | 38 | 82 | 46 | 36 | 81 | 46 | 35 | 74 | 46 | 42 | 82 | 46 | 40 | 81 | 46 | 39 |
| **Units with Partial Heat Recovery** | | | | | | | | | | | | | | | | | | |
| **20** | 49 | 24 | 38 | 54 | 23 | 34 | 66 | 24 | 35 | 51 | 24 | 39 | 55 | 23 | 35 | 66 | 24 | 36 |
| **26** | 50 | 24 | 37 | 54 | 23 | 34 | 66 | 23 | 35 | 51 | 24 | 38 | 55 | 23 | 35 | 66 | 24 | 36 |
| **30** | 65 | 24 | 39 | 71 | 23 | 36 | 84 | 24 | 36 | 67 | 24 | 40 | 72 | 24 | 37 | 84 | 24 | 37 |
| **35** | 63 | 23 | 37 | 69 | 23 | 34 | 82 | 23 | 35 | 65 | 23 | 38 | 71 | 23 | 35 | 82 | 23 | 36 |
| **40** | 50 | 45 | 37 | 53 | 43 | 35 | 62 | 43 | 35 | 51 | 45 | 38 | 53 | 43 | 36 | 61 | 43 | 36 |
| **52** | 50 | 45 | 37 | 53 | 43 | 35 | 62 | 43 | 35 | 51 | 45 | 38 | 54 | 43 | 35 | 61 | 43 | 36 |
| **60** | 65 | 45 | 40 | 71 | 43 | 36 | 80 | 43 | 36 | 67 | 45 | 40 | 71 | 43 | 37 | 79 | 43 | 37 |
| **70** | 63 | 46 | 38 | 69 | 43 | 35 | 77 | 43 | 35 | 65 | 45 | 38 | 69 | 43 | 35 | 77 | 43 | 36 |
| **80** | 58 | 47 | 38 | 67 | 46 | 37 | 66 | 46 | 35 | 61 | 46 | 42 | 68 | 46 | 41 | 67 | 46 | 39 |
| **90** | 58 | 47 | 37 | 66 | 46 | 36 | 66 | 46 | 35 | 60 | 46 | 41 | 67 | 46 | 40 | 67 | 46 | 39 |
| **100** | 70 | 47 | 38 | 79 | 46 | 37 | 79 | 46 | 36 | 73 | 46 | 42 | 80 | 46 | 41 | 79 | 46 | 39 |
| **110** | 70 | 47 | 38 | 79 | 46 | 37 | 79 | 46 | 35 | 73 | 46 | 42 | 80 | 46 | 41 | 79 | 46 | 39 |
| **120** | 70 | 47 | 38 | 80 | 46 | 37 | 80 | 46 | 35 | 73 | 46 | 42 | 81 | 46 | 40 | 80 | 46 | 39 |

**Table 23. Center of gravity (in) — RTPF condenser, 50 Hz, extra efficiency**

| Unit (tons) | Aluminum fins | | | | | | | | | Copper fins | | | | | | | | |
|---|---|---|---|---|---|---|---|---|---|---|---|---|---|---|---|---|---|---|
| | Base Unit | | | With Pump Package | | | With Pump Pkg, Buffer Tank | | | Base Unit | | | With Pump Package | | | With Pump Pkg, Buffer Tank | | |
| | X | Y | Z | X | Y | Z | X | Y | Z | X | Y | Z | X | Y | Z | X | Y | Z |
| **Units without Partial Heat Recovery** | | | | | | | | | | | | | | | | | | |
| **20** | 50 | 24 | 39 | 57 | 23 | 34 | 67 | 23 | 35 | 52 | 24 | 40 | 58 | 23 | 36 | 67 | 23 | 36 |
| **26** | 50 | 24 | 38 | 56 | 23 | 34 | 67 | 23 | 35 | 52 | 24 | 39 | 57 | 23 | 35 | 67 | 23 | 36 |
| **30** | 65 | 24 | 39 | 74 | 23 | 35 | 86 | 23 | 36 | 68 | 24 | 41 | 75 | 23 | 37 | 85 | 23 | 37 |
| **35** | 64 | 23 | 38 | 72 | 23 | 34 | 83 | 23 | 35 | 67 | 23 | 39 | 73 | 23 | 36 | 83 | 23 | 36 |
| **40** | 49 | 45 | 37 | 53 | 42 | 34 | 61 | 43 | 35 | 50 | 45 | 38 | 54 | 43 | 36 | 61 | 43 | 36 |
| **52** | 49 | 45 | 37 | 53 | 43 | 34 | 61 | 43 | 35 | 50 | 45 | 38 | 54 | 43 | 35 | 61 | 43 | 36 |
| **60** | 64 | 45 | 40 | 69 | 43 | 36 | 78 | 43 | 37 | 66 | 45 | 40 | 70 | 43 | 38 | 77 | 43 | 38 |
| **70** | 62 | 45 | 38 | 67 | 43 | 35 | 75 | 43 | 35 | 64 | 45 | 39 | 68 | 43 | 36 | 75 | 44 | 36 |
| **110** | 72 | 47 | 38 | 81 | 46 | 37 | 80 | 46 | 35 | 74 | 46 | 42 | 81 | 46 | 41 | 80 | 46 | 39 |
| **120** | 72 | 47 | 38 | 82 | 46 | 36 | 81 | 46 | 35 | 74 | 46 | 42 | 82 | 46 | 40 | 81 | 46 | 39 |
| **Units with Partial Heat Recovery** | | | | | | | | | | | | | | | | | | |
| **20** | 51 | 24 | 38 | 57 | 23 | 34 | 67 | 23 | 35 | 53 | 24 | 39 | 58 | 23 | 35 | 67 | 24 | 36 |
| **26** | 50 | 24 | 38 | 56 | 23 | 33 | 67 | 23 | 34 | 52 | 24 | 39 | 57 | 23 | 35 | 67 | 23 | 35 |
| **30** | 65 | 24 | 39 | 74 | 23 | 35 | 86 | 24 | 36 | 68 | 24 | 40 | 75 | 23 | 37 | 85 | 24 | 37 |
| **35** | 64 | 23 | 37 | 72 | 23 | 34 | 83 | 23 | 35 | 67 | 24 | 39 | 73 | 23 | 36 | 83 | 23 | 36 |
| **40** | 50 | 45 | 38 | 54 | 42 | 35 | 62 | 43 | 35 | 51 | 45 | 39 | 55 | 43 | 36 | 62 | 43 | 36 |
| **52** | 50 | 45 | 37 | 54 | 43 | 34 | 62 | 43 | 35 | 51 | 45 | 38 | 55 | 43 | 36 | 61 | 43 | 36 |
| **60** | 66 | 45 | 40 | 70 | 43 | 37 | 79 | 43 | 37 | 68 | 45 | 40 | 71 | 43 | 38 | 78 | 43 | 38 |
| **70** | 64 | 45 | 38 | 68 | 43 | 35 | 76 | 43 | 35 | 66 | 45 | 39 | 69 | 43 | 36 | 76 | 44 | 37 |
| **110** | 70 | 47 | 38 | 79 | 46 | 37 | 79 | 46 | 35 | 73 | 46 | 42 | 80 | 46 | 41 | 79 | 46 | 39 |
| **120** | 70 | 47 | 38 | 80 | 46 | 37 | 80 | 46 | 35 | 73 | 46 | 42 | 81 | 46 | 40 | 80 | 46 | 39 |

## Units with Microchannel Condenser

**Table 24. Center of gravity (in) — microchannel condenser, high efficiency**

| Unit (tons) | 60 Hz Units | | | | | | | | | 50 Hz Units | | |
|---|---|---|---|---|---|---|---|---|---|---|---|---|
| | Base Unit | | | With Pump Package | | | With Pump Pkg, Buffer Tank | | | Base Unit | | |
| | X | Y | Z | X | Y | Z | X | Y | Z | X | Y | Z |
| High Efficiency Units | | | | | | | | | | | | |
| **20** | 49 | 38 | 24 | 56 | 33 | 23 | 68 | 34 | 23 | 49 | 38 | 24 |
| **26** | 49 | 37 | 24 | 56 | 33 | 23 | 67 | 34 | 23 | 49 | 37 | 24 |
| **30** | 64 | 39 | 24 | 73 | 34 | 23 | 86 | 35 | 23 | 64 | 39 | 24 |
| **35** | 62 | 37 | 23 | 71 | 33 | 22 | 84 | 34 | 23 | 62 | 37 | 23 |
| **40** | 47 | 37 | 45 | 52 | 33 | 42 | 62 | 34 | 42 | 47 | 37 | 45 |
| **52** | 48 | 36 | 45 | 52 | 33 | 43 | 62 | 34 | 43 | 48 | 36 | 45 |
| **60** | 62 | 39 | 45 | 68 | 35 | 43 | 78 | 36 | 43 | 62 | 39 | 45 |
| **70** | 60 | 37 | 46 | 66 | 34 | 43 | 75 | 34 | 43 | 60 | 37 | 46 |
| **80** | 58 | 35 | 47 | 68 | 34 | 47 | 67 | 32 | 46 | 58 | 35 | 47 |
| **90** | 58 | 34 | 47 | 67 | 33 | 47 | 67 | 32 | 47 | 58 | 34 | 47 |
| **100** | 71 | 35 | 47 | 82 | 34 | 47 | 81 | 33 | 47 | 71 | 35 | 47 |
| **110** | 71 | 35 | 47 | 81 | 34 | 47 | 80 | 33 | 47 | 71 | 35 | 47 |
| **120** | 70 | 35 | 47 | 84 | 33 | 47 | 83 | 32 | 47 | 70 | 35 | 47 |
| **130** | 84 | 36 | 47 | 99 | 35 | 46 | 100 | 33 | 46 | - | - | - |

# Unit Isolation and Leveling

## General

Construct an isolated concrete pad for the unit or provide concrete footings at each of the unit mounting points. Mount the unit directly to the concrete pads or footings.

Level the unit using the base rail as a reference. The unit must be level within 1/4” over the entire length (end-to-end as well as side-to-side). Use shims as necessary to level the unit.

## Isolator Options

### Elastomeric Isolators

Install the optional neoprene isolators at each mounting location. Isolators are identified by part number and color.

1. Secure the isolators to the mounting surface, using the mounting slots in the isolator base plate, as shown in Figure 21. Do not fully tighten the isolator mounting bolts at this time.
2. Align the mounting holes in the base of the unit, with the threaded positioning pins on the top of isolators.
3. Lower the unit on to the isolators and secure the isolator to the unit with a nut. Level the unit carefully. Refer to “Leveling”. Fully tighten the isolator mounting bolts.

**Figure 21. CGAM elastomeric isolator**

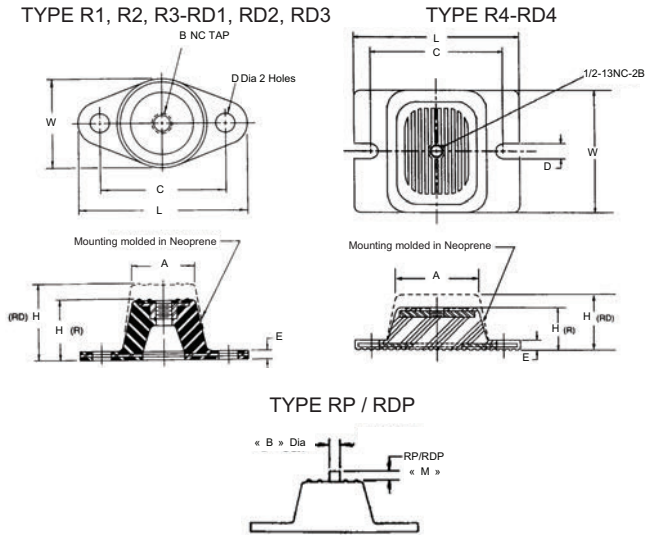


**Table 25. CGAM elastomeric rated isolator**

| Ext | Max Load (lbs) | | Color | | Maximum Deflection (in) | | | Type | |
|---|---|---|---|---|---|---|---|---|---|
| 57 | 250 | | Black | | 0.50 | | | RDP3-WR | |
| 58 | 525 | | Red | | | | | | |
| 59 | 750 | | Green | | | | | | |
| 60 | 1100 | | Gray | | | | | | |
| 61 | 1500 | | Brown | | 0.50 | | | RDP4-WR | |
| 62 | 2250 | | Red | | | | | | |
| 63 | 3000 | | Green | | | | | | |
| 64 | 4000 | | Gray | | | | | | |
| **Ext** | **A** | **B** | **C** | **D** | **E** | **H** | **L** | **M** | **W** |
| 57 | 2.5 | .5 | 4.12 | .56 | .25 | 2.88 | 5.5 | 1.13 | 3.38 |
| 58 | | | | | | | | | |
| 59 | | | | | | | | | |
| 60 | | | | | | | | | |
| 61 | 3.0 | .5 | 5.0 | .56 | .38 | 2.75 | 6.25 | 1.60 ±.25 | 4.63 |
| 62 | | | | | | | | | |
| 63 | | | | | | | | | |
| 64 | | | | | | | | | |

## Seismically Rated Isolators

Seismically rated isolators are required for OSHPD and IBC seismically rated units.

### *Seismic Isolator Specifications*

Isolators are identified by part number and color. See Table 26. For dimensions, see Figure 22 and Figure 23, p. 46. Install the optional seismically rated isolators at each mounting location.

**Table 26. CGAM seismically rated isolator**

| Model | Rated Load (lbs) | Rated Deflection (in) | Spring Rate (lbs/ in) | Color Code |
|---|---|---|---|---|
| MSSH-1E-530N | 530 | 1.17 | 453 | Black/Dk Blue |
| MSSH-1E-825N | 825 | 1.07 | 769 | Red/ Dk Blue |
| MSSH-1E-1000 | 1000 | 1.00 | 1000 | Tan |
| M2SS-1E-800 | 800 | 1.32 | 606 | Black |
| M2SS-1E-1060N | 1060 | 1.17 | 906 | Black/Dk Blue |
| M2SS-1E-1300 | 1300 | 1.05 | 1240 | Red |
| M2SS-1E-1650N | 1650 | 1.07 | 1538 | Red/Dk Blue |
| M2SS-1E-2000 | 2000 | 1.00 | 2000 | Tan |
| M2SS-1E-2400N | 2400 | 1.04 | 2300 | Tan/Dk Blue |

**Figure 22. MSSH seismically rated isolator**

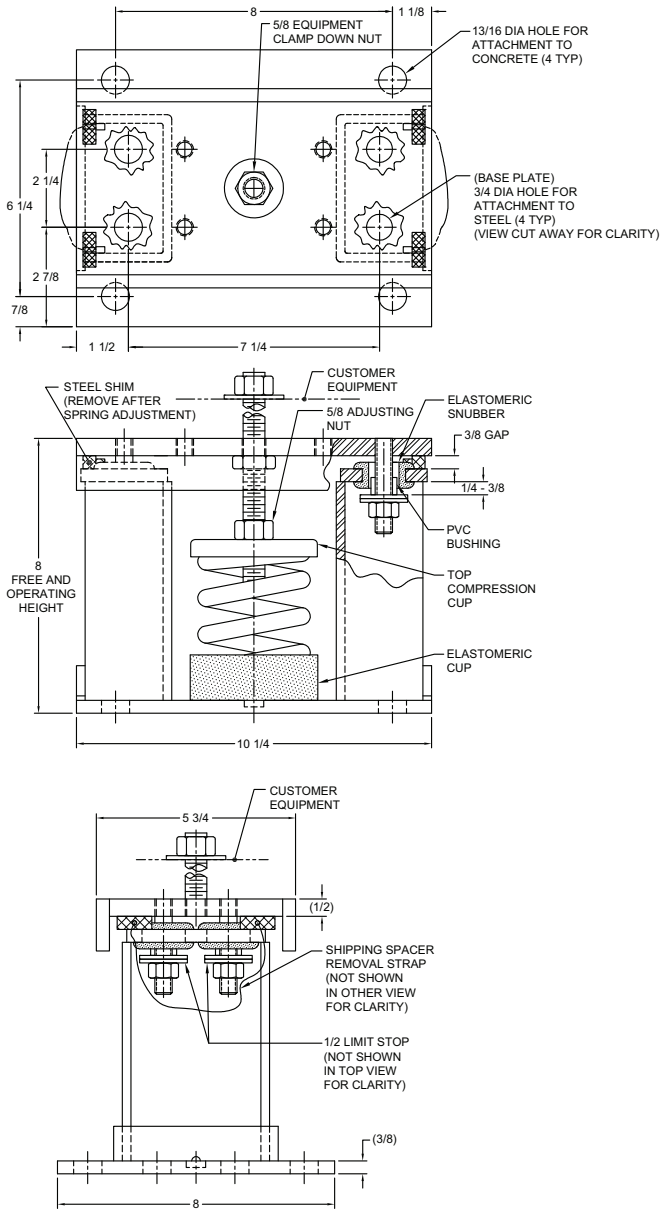


**Figure 23. M2SS seismically rated isolator**

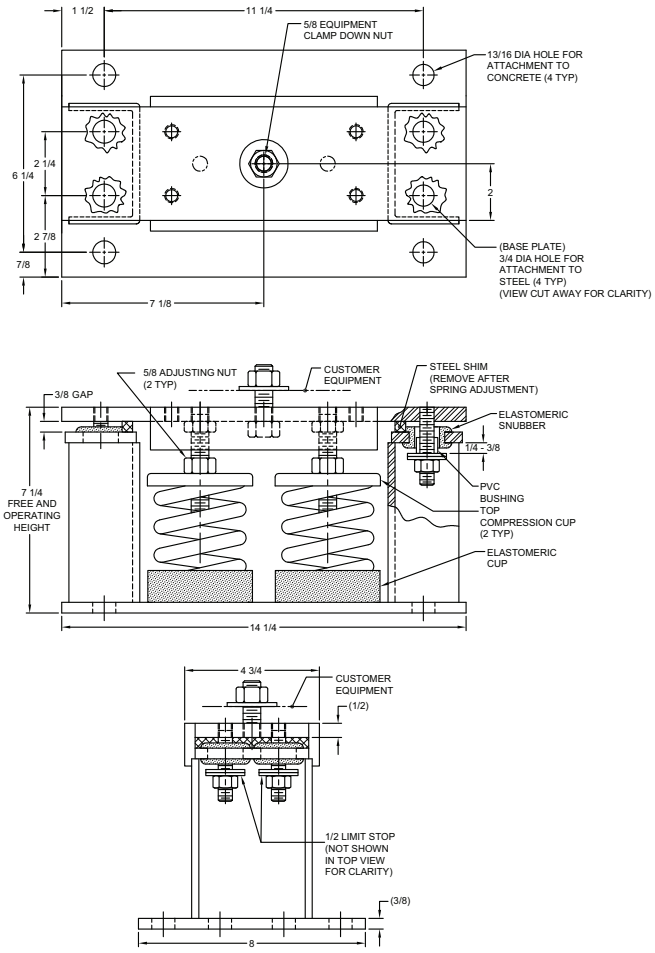

### *Installation of Seismically Rated Isolators*

See Figure 24 and Figure 25, p. 47 for reference.

**Figure 24. MSSH seismic isolator installation reference**

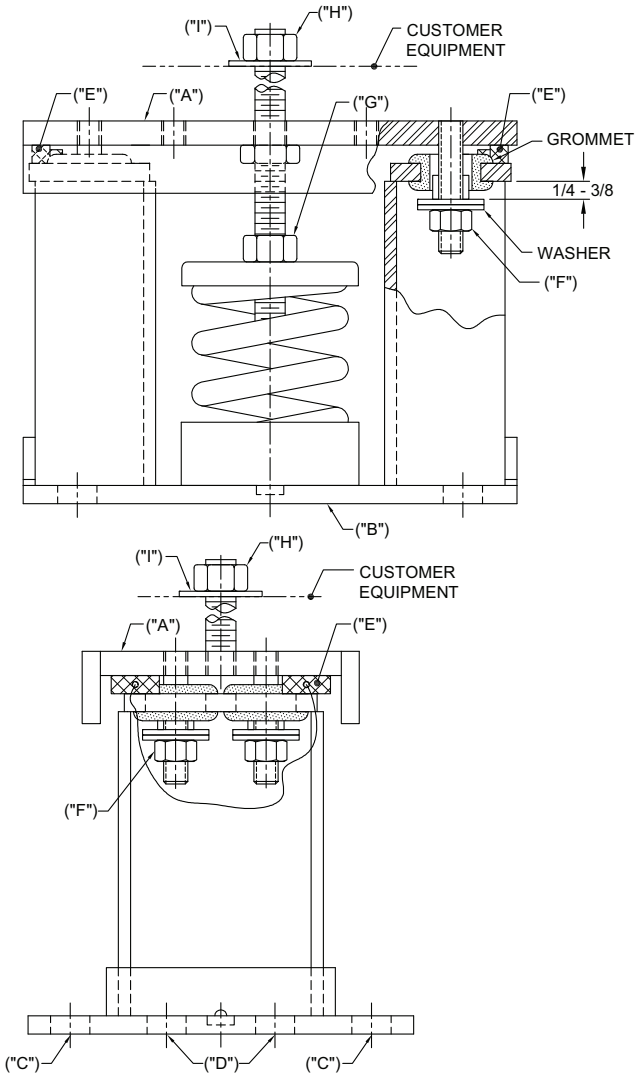


**Figure 25. M2SS seismic isolator installation reference**

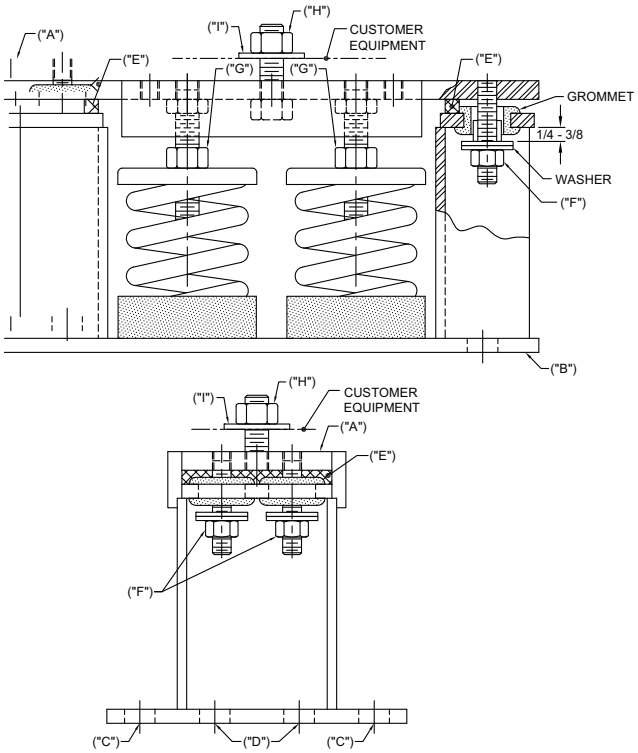


1. Set isolators on mounting surface, ensuring that all isolator centerlines match the submittal drawing. All isolator base plates (B) must be installed on a level surface. Shim or grout as required, leveling all isolat(or base plates at the same elevation.
2. Anchor all isolators to the surface using thru holes (C) for concrete or (D) for steel as require. Welding to steel is permitted providing the weld achieves the required strength.
3. Remove clamp down nut (H) and washer (I). Isolators are shipped with (2) removable spacer shims (E) between the top plate and the housing.

***Important:*** *These shims MUST be in place when the equipment is positioned over the isolators.*

4. With all shims (E) in place, place the equipment onto the top plate (A) of the isolators.
5. Bolt equipment securely to the isolators using doubler plate (included in isolator kit), washer (I) and nut (H) as shown in Figure 26, p. 48.

**Figure 26. Seismic isolator installation detail**

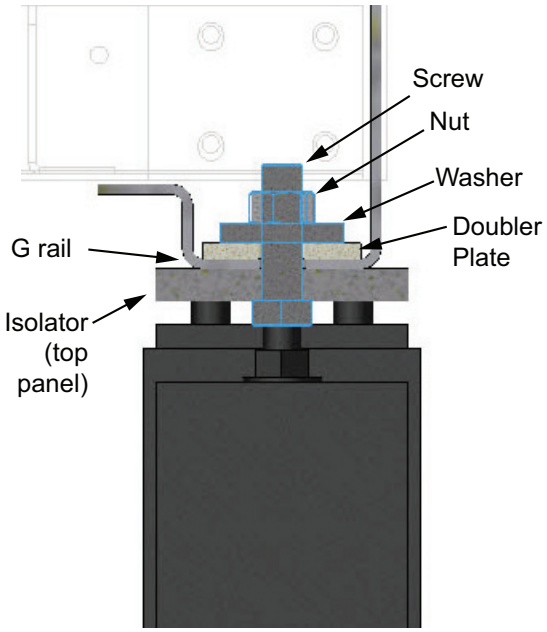


***Important:*** *The following adjustment process can only begin after the equipment or machine is at its full operating weight.*

6. Back off each of the (2) or (4) limit stop locknuts (F) per isolator 1/4-3/8".
7. Adjust each isolator in sequence by turning adjusting nut(s) (G) one full clockwise turn at a time. Repeat this procedure on all isolators, one at a time. check the limit stop locknuts (F) periodically to ensure that clearance between the washer and rubber grommet is maintained. Stop adjustment of an isolator only when the top plate (A) has risen just above the shim (E).
8. Remove all spacer shims (E).
9. Fine adjust isolators to level equipment.
10. Adjust all limit stop locknuts (F) per isolator to obtain 3/8" gap. the limit stop nuts must be kept at this 3/8" gap to ensure uniform bolt loading during uplift.

## Elastomeric Pads

Elastomeric pads are required for units with wind load rating option (model number digit 17 = D).

See "Units with Wind Load Option," p. 64 for information on quantities required and mounting point identification.

Elastomeric pads ship inside the unit control panel. They are provided with an isolation washer and 3/4" free hole in the center of the plate.

**Figure 27. Isolation pad — installed**

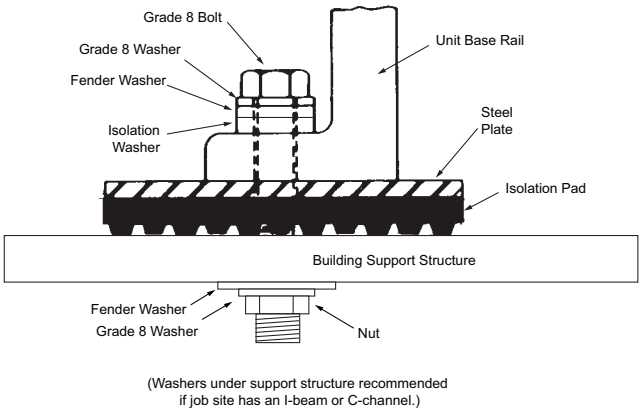


**Table 27. Seismically rated elastomeric isolation pad**

| | | Dimension (in) | | |
|---|---|---|---|---|
| **Model** | **Max Load** | **Length** | **Width** | **Height** |
| B-36 | 2520 | 6 | 6 | .625 |

# Isolator Selection and Placement

## Units without Wind Load Option

***Notes:***

- *Information in this section is applicable to units with elastomeric or seismic isolator options.*
- *For units with wind load rating option (model number digit model number digit 17 = D), see "Units with Wind Load Option," p. 64.*
- See "Mounting Locations," p. 26 for mounting point locations dimensions.

**Figure 28. Mounting point identification, units without wind load option**

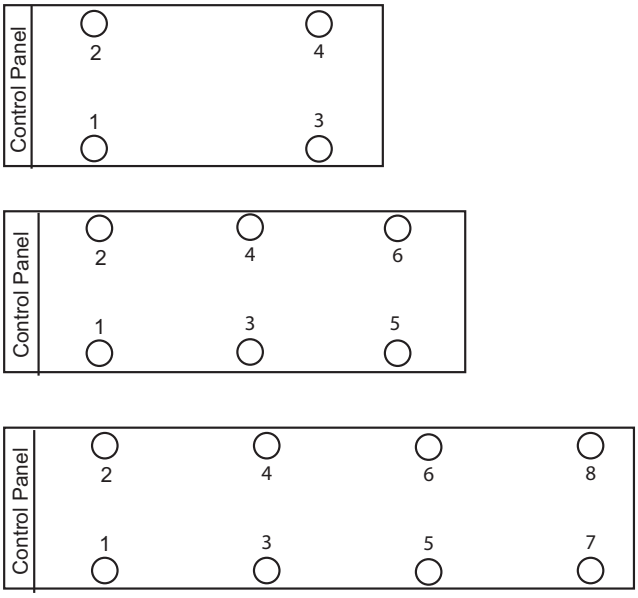

### *Isolator Selection*

**Non-Seismic Units**

**Table 28. Elastomeric isolator selections — base unit (with or without partial heat recovery)**

| Unit Size (tons) | Location | | | | | | | |
|---|---|---|---|---|---|---|---|---|
| | 1 | 2 | 3 | 4 | 5 | 6 | 7 | 8 |
| 20, 26 | RDP-3 Grey 60 | RDP-3 Grey 60 | RDP-3 Grey 60 | RDP-3 Grey 60 | - | - | - | - |
| 30, 35 | RDP-4 Brown 61 | RDP-4 Brown 61 | RDP-3 Grey 60 | RDP-3 Grey 60 | - | - | - | - |
| 40, 52 | RDP-4 Red 62 | RDP-4 Red 62 | RDP-4 Red 62 | RDP-4 Red 62 | - | - | - | - |
| 60, 70 | RDP-4 Red 62 | RDP-4 Red 62 | RDP-3 Gray 60 | RDP-4 Brown 61 | RDP-3 Gray 60 | RDP-3 Gray 60 | - | - |
| 80 to 90 | RDP-4 Green 63 | RDP-4 Green 63 | RDP-4 Red 62 | RDP-4 Red 62 | RDP-3 Gray 60 | RDP-3 Gray 60 | - | - |
| 100 to 120 | RDP-4 Red 62 | RDP-4 Green 63 | RDP-4 Red 62 | RDP-4 Red 62 | RDP-3 Gray 60 | RDP-3 Brown 61 | - | - |
| 130 | RDP-4 Red 62 | RDP-4 Red 62 | RDP-4 Red 62 | RDP-4 Red 62 | RDP-4 Red 62 | RDP-4 Red 62 | RDP-3 Brown 61 | RDP-3 Grey 60 |

**Table 29. Elastomeric isolator selections — with pump package (with or without partial heat recovery)**

| Unit Size (tons) | Location | | | | | | | |
|---|---|---|---|---|---|---|---|---|
| | 1 | 2 | 3 | 4 | 5 | 6 | 7 | 8 |
| 20, 26 | RDP-4 Grey 60 | RDP-3 Grey 60 | RDP-3 Grey 60 | RDP-3 Grey 60 | - | - | - | - |
| 30, 35 | RDP-4 Brown 61 | RDP-4 Brown 61 | RDP-4 Brown 61 | RDP-4 Brown 61 | - | - | - | - |
| 40, 52 | RDP-4 Red 62 | RDP-4 Red 62 | RDP-4 Red 62 | RDP-4 Red 62 | - | - | - | - |
| 60, 70 | RDP-4 Red 62 | RDP-4 Red 62 | RDP-4 Red 62 | RDP-4 Red 62 | RDP-4 Red 62 | RDP-4 Red 62 | - | - |
| 80 to 90 | RDP-4 Red 62 | RDP-4 Green 63 | RDP-4 Red 62 | RDP-4 Red 62 | RDP-3 Red 62 | RDP-3 Red 62 | - | - |
| 100 to 120 | RDP-4 Green 63 | RDP-4 Green 63 | RDP-4 Green 63 | RDP-4 Green 63 | RDP-4 Green 63 | RDP-4 Green 63 | - | - |
| 130 | RDP-4 Red 62 | RDP-4 Red 62 | RDP-4 Red 62 | RDP-4 Red 62 | RDP-4 Red 62 | RDP-4 Red 62 | RDP-4 Red 62 | RDP-4 Red 62 |

**Table 30. Elastomeric isolator selections — with pump package and buffer tank option (with or without partial heat recovery)**

| Unit Size (tons) | Location | | | | | | | |
|---|---|---|---|---|---|---|---|---|
| | 1 | 2 | 3 | 4 | 5 | 6 | 7 | 8 |
| 20, 26 | RDP-3 Grey 60 | RDP-3 Grey 60 | RDP-4 Green 63 | RDP-4 Green 63 | - | - | - | - |
| 30, 35 | RDP-3 Grey 60 | RDP-3 Grey 60 | RDP-4 Green 63 | RDP-4 Green 63 | - | - | - | - |
| 40, 52 | RDP-4 Brown 61 | RDP-4 Brown 61 | RDP-4 Grey 64 | RDP-4 Grey 64 | - | - | - | - |
| 60, 70 | RDP-4 Brown 61 | RDP-4 Brown 61 | RDP-4 Green 63 | RDP-4 Green 63 | RDP-4 Green 63 | RDP-4 Green 63 | - | - |
| 80 to 90 | RDP-4 Green 63 | RDP-4 Green 63 | RDP-4 Red 62 | RDP-4 Red 62 | RDP-4 Red 62 | RDP-4 Red 62 | - | - |
| 100 to 120 | RDP-4 Grey 64 | RDP-4 Grey 64 | RDP-4 Green 63 | RDP-4 Green 63 | RDP-4 Green 63 | RDP-4 Green 63 | - | - |
| 130 | RDP-4 Green 63 | RDP-4 Green 63 | RDP-4 Green 63 | RDP-4 Green 63 | RDP-4 Green 63 | RDP-4 Green 63 | RDP-4 Green 63 | RDP-4 Green 63 |

### Seismic Units

**Table 31. Seismically rated isolator locations**

| Unit Size (ton) | Locations | | | | | | | |
|---|---|---|---|---|---|---|---|---|
| | 1 | 2 | 3 | 4 | 5 | 6 | 7 | 8 |
| 20 | MSSH-1E-825N Red/Dk Blue | MSSH-1E-825N Red/Dk Blue | MSSH-1E-530N Black/Dk Blue | MSSH-1E-530N Black/Dk Blue | - | - | - | - |
| 26 | MSSH-1E-1000 Tan | MSSH-1E-825N Red/Dk Blue | MSSH-1E-530N Black/Dk Blue | MSSH-1E-530N Black/Dk Blue | - | - | - | - |
| 30 | M2SS-1E-1300 Red | M2SS-1E-1060N Black/Dk Blue | M2SS-1E-800 Black | M2SS-1E-800 Black | - | - | - | - |
| 35 | M2SS-1E-1300 Red | M2SS-1E-1060N Black/Dk Blue | M2SS-1E-800 Black | M2SS-1E-800 Black | - | - | - | - |
| 40 | M2SS-1E-1300 Red | M2SS-1E-1300 Red | M2SS-1E-800 Black | M2SS-1E-1060N Black/Dk Blue | - | - | - | - |
| 52 | M2SS-1E-1300 Red | M2SS-1E-1650N Red/Dk Blue | M2SS-1E-1060N Black/Dk Blue | M2SS-1E-1060N Black/Dk Blue | - | - | - | - |
| 60 | M2SS-1E-1650N Red/Dk Blue | M2SS-1E-1650N Red/Dk Blue | M2SS-1E-1060N Black/Dk Blue | M2SS-1E-1060N Black/Dk Blue | M2SS-1E-800 Black | M2SS-1E-800 Black | - | - |
| 70 | M2SS-1E-1650N Red/Dk Blue | M2SS-1E-1650N Red/Dk Blue | M2SS-1E-1060N Black/Dk Blue | M2SS-1E-1060N Black/Dk Blue | M2SS-1E-800 Black | M2SS-1E-800 Black | - | - |
| 80 | M2SS-1E-2000 Tan | M2SS-1E-2000 Tan | M2SS-1E-1060N Black/Dk Blue | M2SS-1E-1300 Red | M2SS-1E-800 Black | M2SS-1E-800 Black | - | - |
| 90 | M2SS-1E-2000 Tan | M2SS-1E-2000 Tan | M2SS-1E-1060N Black/Dk Blue | M2SS-1E-1650N Red/Dk Blue | M2SS-1E-800 Black | M2SS-1E-800 Black | - | - |
| 100 | M2SS-1E-2000 Tan | M2SS-1E-2000 Tan | M2SS-1E-1300 Red | M2SS-1E-1650N Red/Dk Blue | M2SS-1E-800 Black | M2SS-1E-800 Black | - | - |
| 110 | M2SS-1E-2000 Tan | M2SS-1E-2000 Tan | M2SS-1E-1300 Red | M2SS-1E-1650N Red/Dk Blue | M2SS-1E-800 Black | M2SS-1E-800 Black | - | - |
| 120 | M2SS-1E-2000 Tan | M2SS-1E-2000 Tan | M2SS-1E-1300 Red | M2SS-1E-2000 Tan | M2SS-1E-800 Black | M2SS-1E-800 Black | - | - |
| 130 | M2SS-1E-1650N Red/Dk Blue | M2SS-1E-1650N Red/Dk Blue | M2SS-1E-1300 Red | M2SS-1E-1650N Red/Dk Blue | M2SS-1E-1060N Black/Dk Blue | M2SS-1E-1300 Red | M2SS-1E-800 Black | M2SS-1E-1060N Black/Dk Blue |

### *Mounting Point Weights*

**Units with Round Tube, Plate Fin (RTPF) Condensers**

**Table 32. Point weights (lbs) — RTPF condensers, 60 Hz, high efficiency— base unit**

| Unit Size (tons) | Isolator location | | | | | | | | | | | | | | | |
|---|---|---|---|---|---|---|---|---|---|---|---|---|---|---|---|---|
| | Aluminum Fins | | | | | | | | Copper Fins | | | | | | | |
| | 1 | 2 | 3 | 4 | 5 | 6 | 7 | 8 | 1 | 2 | 3 | 4 | 5 | 6 | 7 | 8 |
| **High Efficiency Units without Partial Heat Recovery** | | | | | | | | | | | | | | | | |
| **20** | 706 | 645 | 408 | 365 | - | - | - | - | 822 | 648 | 425 | 487 | - | - | - | - |
| **26** | 792 | 614 | 369 | 420 | - | - | - | - | 807 | 716 | 486 | 442 | - | - | - | - |
| **30** | 775 | 805 | 595 | 431 | - | - | - | - | 916 | 828 | 641 | 581 | - | - | - | - |
| **35** | 894 | 861 | 645 | 436 | - | - | - | - | 1035 | 884 | 690 | 587 | - | - | - | - |
| **40** | 1151 | 1036 | 611 | 811 | - | - | - | - | 1198 | 1246 | 823 | 858 | - | - | - | - |
| **52** | 1080 | 1155 | 714 | 768 | - | - | - | - | 1209 | 1283 | 843 | 898 | - | - | - | - |
| **60** | 972 | 1104 | 630 | 762 | 602 | 492 | - | - | 1100 | 1167 | 855 | 904 | 610 | 644 | - | - |
| **70** | 1117 | 1210 | 781 | 849 | 511 | 557 | - | - | 1239 | 1330 | 910 | 977 | 622 | 668 | - | - |
| **80** | 1435 | 1662 | 774 | 885 | 396 | 449 | - | - | 1795 | 1834 | 863 | 1203 | 581 | 594 | - | - |
| **90** | 1507 | 1763 | 802 | 927 | 406 | 466 | - | - | 1872 | 1930 | 887 | 1249 | 591 | 610 | - | - |
| **100** | 1640 | 1587 | 847 | 1120 | 608 | 866 | - | - | 1770 | 1992 | 1194 | 1342 | 886 | 994 | - | - |
| **110** | 1673 | 1634 | 850 | 1134 | 602 | 863 | - | - | 1803 | 2038 | 1200 | 1356 | 878 | 993 | - | - |
| **120** | 1690 | 1651 | 853 | 1138 | 600 | 861 | - | - | 1820 | 2055 | 1204 | 1360 | 875 | 990 | - | - |
| **130** | 1284 | 1272 | 910 | 1229 | 861 | 852 | 569 | 826 | 1269 | 1749 | 1301 | 1197 | 989 | 1246 | 1008 | 932 |
| **High Efficiency Units with Partial Heat Recovery** | | | | | | | | | | | | | | | | |
| **20** | 707 | 660 | 414 | 382 | - | - | - | - | 773 | 713 | 482 | 453 | - | - | - | - |
| **26** | 793 | 629 | 375 | 437 | - | - | - | - | 752 | 789 | 550 | 402 | - | - | - | - |
| **30** | 836 | 773 | 545 | 502 | - | - | - | - | 921 | 852 | 645 | 597 | - | - | - | - |
| **35** | 955 | 829 | 593 | 507 | - | - | - | - | 1041 | 908 | 694 | 603 | - | - | - | - |
| **40** | 1062 | 1111 | 749 | 785 | - | - | - | - | 1191 | 1239 | 879 | 914 | - | - | - | - |
| **52** | 1073 | 1148 | 770 | 825 | - | - | - | - | 1202 | 1275 | 900 | 954 | - | - | - | - |
| **60** | 931 | 988 | 827 | 884 | 504 | 543 | - | - | 1170 | 1119 | 863 | 825 | 591 | 829 | - | - |
| **70** | 1097 | 1190 | 812 | 880 | 558 | 604 | - | - | 1311 | 1280 | 917 | 895 | 600 | 858 | - | - |
| **80** | 1528 | 1756 | 780 | 891 | 384 | 437 | - | - | 1888 | 1926 | 871 | 1213 | 568 | 580 | - | - |
| **90** | 1602 | 1858 | 807 | 932 | 394 | 454 | - | - | 1966 | 2023 | 896 | 1260 | 577 | 596 | - | - |
| **100** | 1732 | 1680 | 860 | 1138 | 596 | 848 | - | - | 1861 | 2083 | 1213 | 1361 | 869 | 978 | - | - |
| **110** | 1765 | 1726 | 864 | 1152 | 589 | 845 | - | - | 1934 | 1895 | 1209 | 1774 | 829 | 810 | - | - |
| **120** | 1783 | 1744 | 867 | 1156 | 587 | 843 | - | - | 1953 | 1912 | 1214 | 1780 | 827 | 807 | - | - |
| **130** | 1129 | 1587 | 1144 | 1072 | 855 | 803 | 589 | 812 | 1589 | 1475 | 1145 | 1605 | 938 | 1203 | 990 | 934 |

**Table 33. Point weights (lbs) — RTPF condensers, 60 Hz, extra efficiency— base unit**

| Unit Size (tons) | Isolator location | | | | | | | | | | | | | | | |
|---|---|---|---|---|---|---|---|---|---|---|---|---|---|---|---|---|
| | Aluminum Fins | | | | | | | | Copper Fins | | | | | | | |
| | 1 | 2 | 3 | 4 | 5 | 6 | 7 | 8 | 1 | 2 | 3 | 4 | 5 | 6 | 7 | 8 |
| **Units without Partial Heat Recovery** | | | | | | | | | | | | | | | | |
| **20** | 724 | 663 | 426 | 383 | - | - | - | - | 872 | 698 | 476 | 537 | - | - | - | - |
| **26** | 810 | 632 | 387 | 439 | - | - | - | - | 858 | 766 | 536 | 493 | - | - | - | - |
| **30** | 800 | 830 | 620 | 456 | - | - | - | - | 986 | 898 | 711 | 651 | - | - | - | - |
| **35** | 919 | 886 | 669 | 460 | - | - | - | - | 1105 | 954 | 760 | 657 | - | - | - | - |
| **40** | 1188 | 1073 | 647 | 848 | - | - | - | - | 1298 | 1346 | 923 | 958 | - | - | - | - |
| **52** | 1117 | 1192 | 750 | 805 | - | - | - | - | 1310 | 1383 | 944 | 998 | - | - | - | - |
| **60** | 1005 | 1137 | 663 | 795 | 635 | 525 | - | - | 1193 | 1261 | 948 | 998 | 704 | 737 | - | - |
| **70** | 1150 | 1243 | 814 | 882 | 544 | 591 | - | - | 1332 | 1423 | 1004 | 1071 | 715 | 761 | - | - |
| **110** | 1673 | 1634 | 850 | 1134 | 602 | 863 | - | - | 1803 | 2038 | 1200 | 1356 | 878 | 993 | - | - |
| **120** | 1690 | 1651 | 853 | 1138 | 600 | 861 | - | - | 1820 | 2055 | 1204 | 1360 | 875 | 990 | - | - |
| **Units with Partial Heat Recovery** | | | | | | | | | | | | | | | | |
| **20** | 726 | 679 | 433 | 400 | - | - | - | - | 823 | 763 | 532 | 504 | - | - | - | - |
| **26** | 811 | 648 | 393 | 456 | - | - | - | - | 802 | 839 | 600 | 453 | - | - | - | - |
| **30** | 861 | 798 | 569 | 527 | - | - | - | - | 991 | 922 | 715 | 667 | - | - | - | - |
| **35** | 980 | 854 | 618 | 532 | - | - | - | - | 1111 | 978 | 764 | 673 | - | - | - | - |
| **40** | 1098 | 1147 | 785 | 821 | - | - | - | - | 1291 | 1339 | 979 | 1014 | - | - | - | - |
| **52** | 1110 | 1184 | 806 | 861 | - | - | - | - | 1302 | 1376 | 1000 | 1054 | - | - | - | - |
| **60** | 965 | 1022 | 860 | 917 | 537 | 576 | - | - | 1263 | 1212 | 956 | 919 | 684 | 923 | - | - |
| **70** | 1131 | 1223 | 845 | 913 | 591 | 637 | - | - | 1404 | 1373 | 1011 | 988 | 694 | 951 | - | - |
| **110** | 1765 | 1726 | 864 | 1152 | 589 | 845 | - | - | 1934 | 1895 | 1209 | 1774 | 829 | 810 | - | - |
| **120** | 1783 | 1744 | 867 | 1156 | 587 | 843 | - | - | 1953 | 1912 | 1214 | 1780 | 827 | 807 | - | - |

**Table 34. Point weights (lbs) — RTPF condensers, 60 Hz, high efficiency — with pump package (no buffer tank)**

| | Isolator location | | | | | | | | | | | | | | | |
|---|---|---|---|---|---|---|---|---|---|---|---|---|---|---|---|---|
| | Aluminum Fins | | | | | | | | Copper Fins | | | | | | | |
| Size (tons) | 1 | 2 | 3 | 4 | 5 | 6 | 7 | 8 | 1 | 2 | 3 | 4 | 5 | 6 | 7 | 8 |
| **Units without Partial Heat Recovery** | | | | | | | | | | | | | | | | |
| **20** | 874 | 612 | 603 | 618 | - | - | - | - | 802 | 802 | 809 | 552 | - | - | - | - |
| **26** | 910 | 630 | 614 | 624 | - | - | - | - | 834 | 824 | 823 | 554 | - | - | - | - |
| **30** | 832 | 836 | 904 | 619 | - | - | - | - | 989 | 842 | 933 | 787 | - | - | - | - |
| **35** | 946 | 896 | 958 | 619 | - | - | - | - | 1182 | 824 | 908 | 865 | - | - | - | - |
| **40** | 1214 | 1109 | 1009 | 932 | - | - | - | - | 1336 | 1244 | 1146 | 1054 | - | - | - | - |
| **52** | 1225 | 1146 | 1030 | 972 | - | - | - | - | 1349 | 1279 | 1165 | 1095 | - | - | - | - |
| **60** | 1204 | 943 | 802 | 862 | 734 | 794 | - | - | 1250 | 1192 | 923 | 880 | 928 | 885 | - | - |
| **70** | 1261 | 1226 | 866 | 840 | 818 | 792 | - | - | 1290 | 1258 | 1196 | 1163 | 819 | 795 | - | - |
| **80** | 1296 | 1663 | 922 | 1070 | 901 | 763 | - | - | 1637 | 1812 | 1190 | 1306 | 927 | 1012 | - | - |
| **90** | 1556 | 1616 | 816 | 1152 | 857 | 886 | - | - | 1712 | 1910 | 1217 | 1349 | 934 | 1031 | - | - |
| **100** | 1278 | 1684 | 1330 | 1175 | 1013 | 1226 | - | - | 1561 | 1736 | 1653 | 1827 | 1162 | 1278 | - | - |
| **110** | 1305 | 1733 | 1339 | 1189 | 1006 | 1221 | - | - | 1593 | 1778 | 1661 | 1846 | 1151 | 1275 | - | - |
| **120** | 1276 | 1623 | 1280 | 1629 | 1284 | 1091 | - | - | 1742 | 1721 | 1721 | 1699 | 1133 | 1678 | - | - |
| **130** | 835 | 1195 | 1150 | 1206 | 1167 | 1223 | 1177 | 1233 | 1341 | 1335 | 1253 | 1247 | 1116 | 1664 | 1564 | 1555 |
| **Units with Partial Heat Recovery** | | | | | | | | | | | | | | | | |
| **20** | 877 | 626 | 609 | 636 | - | - | - | - | 802 | 819 | 816 | 568 | - | - | - | - |
| **26** | 851 | 706 | 680 | 581 | - | - | - | - | 835 | 841 | 830 | 570 | - | - | - | - |
| **30** | 837 | 859 | 909 | 635 | - | - | - | - | 996 | 864 | 936 | 804 | - | - | - | - |
| **35** | 1025 | 846 | 889 | 709 | - | - | - | - | 1189 | 846 | 910 | 884 | - | - | - | - |
| **40** | 1118 | 1190 | 1154 | 899 | - | - | - | - | 1328 | 1236 | 1202 | 1110 | - | - | - | - |
| **52** | 1127 | 1229 | 1177 | 937 | - | - | - | - | 1341 | 1271 | 1222 | 1152 | - | - | - | - |
| **60** | 1186 | 928 | 824 | 883 | 786 | 845 | - | - | 1234 | 1175 | 945 | 903 | 979 | 936 | - | - |
| **70** | 1245 | 1209 | 889 | 863 | 869 | 843 | - | - | 1272 | 1239 | 1224 | 1191 | 868 | 844 | - | - |
| **80** | 1569 | 1609 | 804 | 1123 | 832 | 851 | - | - | 1727 | 1902 | 1203 | 1320 | 910 | 996 | - | - |
| **90** | 1648 | 1707 | 826 | 1166 | 842 | 870 | - | - | 1803 | 2001 | 1230 | 1362 | 918 | 1015 | - | - |
| **100** | 1584 | 1635 | 1178 | 1212 | 951 | 1331 | - | - | 1648 | 1822 | 1680 | 1854 | 1141 | 1257 | - | - |
| **110** | 1616 | 1680 | 1183 | 1226 | 943 | 1329 | - | - | 1680 | 1865 | 1688 | 1873 | 1131 | 1254 | - | - |
| **120** | 1586 | 1561 | 1136 | 1679 | 1212 | 1196 | - | - | 1827 | 1809 | 1748 | 1730 | 1114 | 1653 | - | - |
| **130** | 1066 | 1198 | 1089 | 1221 | 1124 | 1256 | 1143 | 1275 | 1381 | 1114 | 1358 | 1638 | 1323 | 1585 | 1305 | 1557 |

**Table 35. Point weights (lbs) — RTPF condensers, 60 Hz, extra efficiency — with pump package (no buffer tank)**

| | Isolator location | | | | | | | | | | | | | | | |
|---|---|---|---|---|---|---|---|---|---|---|---|---|---|---|---|---|
| | Aluminum Fins | | | | | | | | Copper Fins | | | | | | | |
| Size (tons) | 1 | 2 | 3 | 4 | 5 | 6 | 7 | 8 | 1 | 2 | 3 | 4 | 5 | 6 | 7 | 8 |
| **Units without Partial Heat Recovery** | | | | | | | | | | | | | | | | |
| **20** | 893 | 630 | 621 | 637 | - | - | - | - | 852 | 853 | 859 | 602 | - | - | - | - |
| **26** | 928 | 649 | 632 | 642 | - | - | - | - | 884 | 875 | 873 | 605 | - | - | - | - |
| **30** | 856 | 860 | 929 | 644 | - | - | - | - | 1059 | 912 | 1003 | 857 | - | - | - | - |
| **35** | 971 | 921 | 983 | 644 | - | - | - | - | 1252 | 894 | 978 | 935 | - | - | - | - |
| **40** | 1250 | 1145 | 1046 | 969 | - | - | - | - | 1436 | 1344 | 1246 | 1155 | - | - | - | - |
| **52** | 1262 | 1182 | 1066 | 1008 | - | - | - | - | 1449 | 1379 | 1265 | 1196 | - | - | - | - |
| **60** | 1237 | 976 | 835 | 895 | 767 | 827 | - | - | 1343 | 1285 | 1016 | 974 | 1021 | 979 | - | - |
| **70** | 1294 | 1259 | 899 | 874 | 851 | 825 | - | - | 1384 | 1351 | 1289 | 1257 | 913 | 889 | - | - |
| **110** | 1305 | 1733 | 1339 | 1189 | 1006 | 1221 | - | - | 1593 | 1778 | 1661 | 1846 | 1151 | 1275 | - | - |
| **120** | 1276 | 1623 | 1280 | 1629 | 1284 | 1091 | - | - | 1742 | 1721 | 1721 | 1699 | 1133 | 1678 | - | - |
| **Units with Partial Heat Recovery** | | | | | | | | | | | | | | | | |
| **20** | 895 | 644 | 627 | 655 | - | - | - | - | 852 | 869 | 867 | 618 | - | - | - | - |
| **26** | 870 | 724 | 699 | 599 | - | - | - | - | 885 | 891 | 881 | 621 | - | - | - | - |
| **30** | 862 | 884 | 934 | 660 | - | - | - | - | 1066 | 934 | 1006 | 874 | - | - | - | - |
| **35** | 1050 | 871 | 913 | 734 | - | - | - | - | 1259 | 916 | 980 | 954 | - | - | - | - |
| **40** | 1154 | 1227 | 1190 | 936 | - | - | - | - | 1429 | 1337 | 1302 | 1210 | - | - | - | - |
| **52** | 1164 | 1265 | 1213 | 974 | - | - | - | - | 1442 | 1372 | 1322 | 1252 | - | - | - | - |
| **60** | 1219 | 962 | 857 | 916 | 819 | 878 | - | - | 1327 | 1269 | 1039 | 996 | 1072 | 1030 | - | - |
| **70** | 1278 | 1242 | 922 | 896 | 902 | 876 | - | - | 1365 | 1332 | 1317 | 1284 | 961 | 937 | - | - |
| **110** | 1616 | 1680 | 1183 | 1226 | 943 | 1329 | - | - | 1680 | 1865 | 1688 | 1873 | 1131 | 1254 | - | - |
| **120** | 1586 | 1561 | 1136 | 1679 | 1212 | 1196 | - | - | 1827 | 1809 | 1748 | 1730 | 1114 | 1653 | - | - |

**Table 36. Point weights (lbs) — RTPF condensers, 60 Hz, high efficiency — with pump package and buffer tank**

| | Isolator location | | | | | | | | | | | | | | | |
|---|---|---|---|---|---|---|---|---|---|---|---|---|---|---|---|---|
| | Aluminum Fins | | | | | | | | Copper Fins | | | | | | | |
| Size (tons) | 1 | 2 | 3 | 4 | 5 | 6 | 7 | 8 | 1 | 2 | 3 | 4 | 5 | 6 | 7 | 8 |
| **Units without Partial Heat Recovery** | | | | | | | | | | | | | | | | |
| **20** | 616 | 413 | 1728 | 1650 | - | - | - | - | 610 | 538 | 1867 | 1650 | - | - | - | - |
| **26** | 650 | 434 | 1741 | 1653 | - | - | - | - | 640 | 562 | 1883 | 1650 | - | - | - | - |
| **30** | 663 | 585 | 1939 | 1703 | - | - | - | - | 848 | 564 | 1940 | 1898 | - | - | - | - |
| **35** | 868 | 555 | 1902 | 1793 | - | - | - | - | 865 | 722 | 2092 | 1800 | - | - | - | - |
| **40** | 838 | 790 | 2265 | 2135 | - | - | - | - | 966 | 918 | 2395 | 2264 | - | - | - | - |
| **52** | 856 | 820 | 2279 | 2181 | - | - | - | - | 985 | 948 | 2409 | 2310 | - | - | - | - |
| **60** | 679 | 656 | 1237 | 1191 | 1704 | 1636 | - | - | 867 | 835 | 1224 | 1181 | 1889 | 1825 | - | - |
| **70** | 875 | 857 | 1184 | 1159 | 1765 | 1726 | - | - | 1001 | 981 | 1304 | 1278 | 1881 | 1841 | - | - |
| **80** | 1868 | 2086 | 1234 | 1379 | 898 | 1005 | - | - | 1892 | 2452 | 1703 | 1649 | 1040 | 1005 | - | - |
| **90** | 1873 | 2145 | 1281 | 1657 | 957 | 828 | - | - | 2169 | 2399 | 1565 | 1738 | 1012 | 1127 | - | - |
| **100** | 1681 | 2251 | 1788 | 1796 | 1262 | 1267 | - | - | 2291 | 2524 | 1638 | 1812 | 1559 | 1733 | - | - |
| **110** | 1710 | 2298 | 1797 | 1810 | 1254 | 1263 | - | - | 2324 | 2568 | 1645 | 1828 | 1549 | 1732 | - | - |
| **120** | 1861 | 2235 | 1856 | 1671 | 1234 | 1666 | - | - | 2313 | 2561 | 1709 | 1895 | 1684 | 1870 | - | - |
| **130** | 1209 | 1222 | 1148 | 1741 | 1579 | 1599 | 1504 | 1523 | 1110 | 1688 | 1706 | 1728 | 1768 | 1790 | 1801 | 1824 |
| **Units with Partial Heat Recovery** | | | | | | | | | | | | | | | | |
| **20** | 623 | 423 | 1729 | 1672 | - | - | - | - | 616 | 549 | 1870 | 1670 | - | - | - | - |
| **26** | 585 | 516 | 1813 | 1604 | - | - | - | - | 646 | 574 | 1886 | 1671 | - | - | - | - |
| **30** | 674 | 603 | 1938 | 1724 | - | - | - | - | 860 | 581 | 1938 | 1920 | - | - | - | - |
| **35** | 880 | 572 | 1900 | 1816 | - | - | - | - | 874 | 742 | 2092 | 1821 | - | - | - | - |
| **40** | 830 | 783 | 2321 | 2191 | - | - | - | - | 959 | 911 | 2451 | 2320 | - | - | - | - |
| **52** | 849 | 813 | 2336 | 2238 | - | - | - | - | 977 | 941 | 2466 | 2367 | - | - | - | - |
| **60** | 668 | 645 | 1248 | 1202 | 1762 | 1693 | - | - | 855 | 824 | 1238 | 1194 | 1945 | 1881 | - | - |
| **70** | 864 | 845 | 1198 | 1172 | 1821 | 1783 | - | - | 989 | 969 | 1317 | 1291 | 1938 | 1898 | - | - |
| **80** | 1823 | 2357 | 1284 | 1248 | 980 | 953 | - | - | 2217 | 2292 | 1679 | 1736 | 827 | 1165 | - | - |
| **90** | 1959 | 2242 | 1296 | 1666 | 944 | 809 | - | - | 2292 | 2389 | 1709 | 1781 | 832 | 1183 | - | - |
| **100** | 1762 | 2347 | 1816 | 1814 | 1246 | 1245 | - | - | 2380 | 2612 | 1661 | 1835 | 1540 | 1714 | - | - |
| **110** | 1791 | 2394 | 1825 | 1829 | 1238 | 1241 | - | - | 2412 | 2656 | 1668 | 1851 | 1530 | 1713 | - | - |
| **120** | 1941 | 2333 | 1885 | 1694 | 1220 | 1639 | - | - | 2403 | 2651 | 1733 | 1919 | 1665 | 1851 | - | - |
| **130** | 1157 | 1611 | 1132 | 1573 | 1638 | 1513 | 1607 | 1482 | 1476 | 1637 | 1559 | 1720 | 1688 | 1849 | 1756 | 1918 |

**Table 37. Point weights (lbs) — RTPF condensers, 60 Hz, extra efficiency — with pump package and buffer tank**

| | Isolator location | | | | | | | | | | | | | | | |
|---|---|---|---|---|---|---|---|---|---|---|---|---|---|---|---|---|
| | Aluminum Fins | | | | | | | | Copper Fins | | | | | | | |
| Size (tons) | 1 | 2 | 3 | 4 | 5 | 6 | 7 | 8 | 1 | 2 | 3 | 4 | 5 | 6 | 7 | 8 |
| **Units without Partial Heat Recovery** | | | | | | | | | | | | | | | | |
| **20** | 635 | 432 | 1746 | 1668 | - | - | - | - | 660 | 588 | 1917 | 1700 | - | - | - | - |
| **26** | 668 | 453 | 1759 | 1671 | - | - | - | - | 690 | 612 | 1934 | 1700 | - | - | - | - |
| **30** | 688 | 610 | 1964 | 1728 | - | - | - | - | 918 | 634 | 2010 | 1968 | - | - | - | - |
| **35** | 893 | 580 | 1927 | 1818 | - | - | - | - | 935 | 792 | 2162 | 1870 | - | - | - | - |
| **40** | 874 | 827 | 2302 | 2172 | - | - | - | - | 1067 | 1018 | 2496 | 2364 | - | - | - | - |
| **52** | 892 | 857 | 2315 | 2218 | - | - | - | - | 1085 | 1049 | 2510 | 2411 | - | - | - | - |
| **60** | 712 | 689 | 1270 | 1224 | 1737 | 1669 | - | - | 960 | 929 | 1318 | 1275 | 1982 | 1918 | - | - |
| **70** | 909 | 890 | 1217 | 1192 | 1798 | 1760 | - | - | 1094 | 1075 | 1398 | 1371 | 1974 | 1935 | - | - |
| **110** | 1710 | 2298 | 1797 | 1810 | 1254 | 1263 | - | - | 2324 | 2568 | 1645 | 1828 | 1549 | 1732 | - | - |
| **120** | 1861 | 2235 | 1856 | 1671 | 1234 | 1666 | - | - | 2313 | 2561 | 1709 | 1895 | 1684 | 1870 | - | - |
| **Units with Partial Heat Recovery** | | | | | | | | | | | | | | | | |
| **20** | 642 | 441 | 1747 | 1690 | - | - | - | - | 666 | 599 | 1920 | 1720 | - | - | - | - |
| **26** | 604 | 534 | 1831 | 1622 | - | - | - | - | 696 | 624 | 1936 | 1721 | - | - | - | - |
| **30** | 699 | 628 | 1963 | 1749 | - | - | - | - | 930 | 650 | 2008 | 1990 | - | - | - | - |
| **35** | 905 | 597 | 1925 | 1841 | - | - | - | - | 944 | 812 | 2162 | 1891 | - | - | - | - |
| **40** | 867 | 819 | 2358 | 2227 | - | - | - | - | 1059 | 1011 | 2552 | 2420 | - | - | - | - |
| **52** | 885 | 849 | 2372 | 2274 | - | - | - | - | 1077 | 1041 | 2566 | 2467 | - | - | - | - |
| **60** | 701 | 678 | 1281 | 1235 | 1795 | 1726 | - | - | 949 | 917 | 1331 | 1288 | 2039 | 1974 | - | - |
| **70** | 897 | 878 | 1231 | 1205 | 1855 | 1816 | - | - | 1082 | 1063 | 1411 | 1384 | 2031 | 1991 | - | - |
| **110** | 1791 | 2394 | 1825 | 1829 | 1238 | 1241 | - | - | 2412 | 2656 | 1668 | 1851 | 1530 | 1713 | - | - |
| **120** | 1941 | 2333 | 1885 | 1694 | 1220 | 1639 | - | - | 2403 | 2651 | 1733 | 1919 | 1665 | 1851 | - | - |

**Table 38. Point weights (lbs) — RTPF condensers, 50 Hz, high efficiency — base unit**

| Size (tons) | Isolator location | | | | | | | | | | | |
|---|---|---|---|---|---|---|---|---|---|---|---|---|
| | Aluminum Fins | | | | | | Copper Fins | | | | | |
| | 1 | 2 | 3 | 4 | 5 | 6 | 1 | 2 | 3 | 4 | 5 | 6 |
| **Units without Partial Heat Recovery** | | | | | | | | | | | | |
| **20** | 767 | 605 | 348 | 405 | - | - | 833 | 658 | 415 | 478 | - | - |
| **26** | 792 | 614 | 369 | 420 | - | - | 807 | 716 | 486 | 442 | - | - |
| **30** | 775 | 805 | 595 | 431 | - | - | 916 | 828 | 641 | 581 | - | - |
| **35** | 894 | 861 | 645 | 436 | - | - | 1035 | 884 | 690 | 587 | - | - |
| **40** | 1151 | 1036 | 611 | 811 | - | - | 1198 | 1246 | 823 | 858 | - | - |
| **52** | 1080 | 1155 | 714 | 768 | - | - | 1209 | 1283 | 843 | 898 | - | - |
| **60** | 972 | 1104 | 630 | 762 | 602 | 492 | 1100 | 1167 | 855 | 904 | 610 | 644 |
| **70** | 1117 | 1210 | 781 | 849 | 511 | 557 | 1239 | 1330 | 910 | 977 | 622 | 668 |
| **80** | 1435 | 1662 | 774 | 885 | 396 | 449 | 1795 | 1834 | 863 | 1203 | 581 | 594 |
| **90** | 1507 | 1763 | 802 | 926 | 406 | 465 | 1872 | 1930 | 887 | 1249 | 591 | 610 |
| **100** | 1654 | 1605 | 840 | 1113 | 593 | 847 | 1786 | 2008 | 1188 | 1336 | 869 | 977 |
| **110** | 1670 | 1632 | 849 | 1132 | 600 | 861 | 1801 | 2036 | 1198 | 1354 | 876 | 991 |
| **120** | 1689 | 1650 | 853 | 1137 | 599 | 860 | 1820 | 2054 | 1203 | 1359 | 875 | 990 |
| **Units with Partial Heat Recovery** | | | | | | | | | | | | |
| **20** | 768 | 621 | 354 | 422 | - | - | 784 | 724 | 472 | 444 | - | - |
| **26** | 793 | 629 | 375 | 437 | - | - | 752 | 789 | 549 | 402 | - | - |
| **30** | 836 | 773 | 545 | 502 | - | - | 921 | 852 | 645 | 597 | - | - |
| **35** | 955 | 829 | 593 | 507 | - | - | 1041 | 907 | 694 | 603 | - | - |
| **40** | 1062 | 1111 | 749 | 785 | - | - | 1191 | 1239 | 879 | 914 | - | - |
| **52** | 1073 | 1148 | 769 | 824 | - | - | 1202 | 1276 | 899 | 953 | - | - |
| **60** | 931 | 988 | 827 | 884 | 504 | 543 | 1170 | 1119 | 863 | 825 | 591 | 829 |
| **70** | 1098 | 1190 | 812 | 880 | 558 | 604 | 1311 | 1280 | 917 | 894 | 600 | 857 |
| **80** | 1528 | 1756 | 780 | 891 | 384 | 437 | 1888 | 1926 | 871 | 1213 | 568 | 580 |
| **90** | 1601 | 1856 | 807 | 932 | 394 | 454 | 1964 | 2022 | 895 | 1259 | 577 | 596 |
| **100** | 1745 | 1697 | 853 | 1131 | 581 | 829 | 1876 | 2098 | 1206 | 1354 | 852 | 961 |
| **110** | 1762 | 1724 | 862 | 1150 | 588 | 844 | 1932 | 1893 | 1208 | 1772 | 828 | 809 |
| **120** | 1781 | 1743 | 866 | 1155 | 587 | 842 | 1951 | 1911 | 1213 | 1779 | 826 | 806 |

**Table 39. Point weights (lbs) — RTPF condensers, 50 Hz, extra efficiency — base unit**

| Size (tons) | Isolator location | | | | | | | | | | | |
|---|---|---|---|---|---|---|---|---|---|---|---|---|
| | Aluminum Fins | | | | | | Copper Fins | | | | | |
| | 1 | 2 | 3 | 4 | 5 | 6 | 1 | 2 | 3 | 4 | 5 | 6 |
| **Units without Partial Heat Recovery** | | | | | | | | | | | | |
| **20** | 785 | 624 | 366 | 424 | - | - | 883 | 708 | 465 | 528 | - | - |
| **26** | 810 | 632 | 387 | 439 | - | - | 858 | 766 | 536 | 493 | - | - |
| **30** | 800 | 830 | 620 | 456 | - | - | 986 | 898 | 711 | 651 | - | - |
| **35** | 919 | 886 | 669 | 460 | - | - | 1105 | 954 | 760 | 657 | - | - |
| **40** | 1188 | 1073 | 647 | 848 | - | - | 1298 | 1346 | 923 | 958 | - | - |
| **52** | 1117 | 1192 | 750 | 805 | - | - | 1310 | 1383 | 944 | 998 | - | - |
| **60** | 1005 | 1137 | 663 | 795 | 635 | 525 | 1193 | 1261 | 948 | 998 | 704 | 737 |
| **70** | 1150 | 1243 | 814 | 882 | 544 | 591 | 1332 | 1423 | 1004 | 1071 | 715 | 761 |
| **110** | 1670 | 1632 | 849 | 1132 | 600 | 861 | 1801 | 2036 | 1198 | 1354 | 876 | 991 |
| **120** | 1689 | 1650 | 853 | 1137 | 599 | 860 | 1820 | 2054 | 1203 | 1359 | 875 | 990 |
| **Units with Partial Heat Recovery** | | | | | | | | | | | | |
| **20** | 787 | 639 | 373 | 440 | - | - | 834 | 774 | 522 | 494 | - | - |
| **26** | 811 | 647 | 393 | 455 | - | - | 802 | 839 | 600 | 452 | - | - |
| **30** | 861 | 798 | 569 | 527 | - | - | 991 | 922 | 715 | 667 | - | - |
| **35** | 980 | 854 | 618 | 532 | - | - | 1111 | 977 | 764 | 673 | - | - |
| **40** | 1098 | 1147 | 785 | 821 | - | - | 1291 | 1339 | 979 | 1014 | - | - |
| **52** | 1110 | 1184 | 806 | 861 | - | - | 1302 | 1376 | 1000 | 1054 | - | - |
| **60** | 965 | 1022 | 860 | 917 | 537 | 576 | 1263 | 1212 | 956 | 919 | 684 | 923 |
| **70** | 1131 | 1223 | 845 | 913 | 591 | 637 | 1405 | 1374 | 1010 | 988 | 693 | 951 |
| **110** | 1762 | 1724 | 862 | 1150 | 588 | 844 | 1932 | 1893 | 1208 | 1772 | 828 | 809 |
| **120** | 1781 | 1743 | 866 | 1155 | 587 | 842 | 1951 | 1911 | 1213 | 1779 | 826 | 806 |

**Table 40. Point weights (lbs) — RTPF condensers, 50 Hz, high efficiency — with pump package (no buffer tank)**

| Size (tons) | Isolator location | | | | | | | | | | | |
|---|---|---|---|---|---|---|---|---|---|---|---|---|
| | Aluminum Fins | | | | | | Copper Fins | | | | | |
| | 1 | 2 | 3 | 4 | 5 | 6 | 1 | 2 | 3 | 4 | 5 | 6 |
| **Units without Partial Heat Recovery** | | | | | | | | | | | | |
| **20** | 812 | 680 | 582 | 496 | - | - | 873 | 737 | 655 | 562 | - | - |
| **26** | 894 | 631 | 546 | 568 | - | - | 896 | 747 | 677 | 576 | - | - |
| **30** | 828 | 834 | 823 | 565 | - | - | 979 | 847 | 858 | 726 | - | - |
| **35** | 943 | 895 | 887 | 572 | - | - | 1173 | 829 | 843 | 812 | - | - |
| **40** | 1193 | 1119 | 942 | 888 | - | - | 1232 | 1336 | 1162 | 928 | - | - |
| **52** | 1204 | 1156 | 963 | 928 | - | - | 1329 | 1287 | 1096 | 1053 | - | - |
| **60** | 1206 | 933 | 821 | 870 | 768 | 817 | 1252 | 1181 | 942 | 889 | 962 | 909 |
| **70** | 1264 | 1215 | 885 | 850 | 851 | 815 | 1291 | 1246 | 1220 | 1174 | 851 | 818 |
| **80** | 1298 | 1666 | 914 | 1059 | 885 | 748 | 1641 | 1815 | 1179 | 1296 | 912 | 997 |
| **90** | 1558 | 1619 | 807 | 1141 | 841 | 871 | 1716 | 1913 | 1206 | 1338 | 919 | 1016 |
| **100** | 1292 | 1707 | 1316 | 1162 | 983 | 1185 | 1581 | 1755 | 1637 | 1811 | 1128 | 1244 |
| **110** | 1306 | 1735 | 1328 | 1179 | 989 | 1200 | 1596 | 1780 | 1649 | 1833 | 1134 | 1257 |
| **120** | 1271 | 1847 | 1244 | 1204 | 1218 | 1178 | 1754 | 1743 | 1673 | 1661 | 1062 | 1581 |
| **Units with Partial Heat Recovery** | | | | | | | | | | | | |
| **20** | 872 | 636 | 530 | 571 | - | - | 874 | 753 | 661 | 579 | - | - |
| **26** | 896 | 645 | 551 | 585 | - | - | 897 | 763 | 684 | 592 | - | - |
| **30** | 833 | 858 | 828 | 581 | - | - | 986 | 869 | 861 | 744 | - | - |
| **35** | 948 | 919 | 892 | 588 | - | - | 1180 | 850 | 846 | 830 | - | - |
| **40** | 1185 | 1111 | 998 | 944 | - | - | 1309 | 1244 | 1133 | 1068 | - | - |
| **52** | 1197 | 1148 | 1019 | 983 | - | - | 1322 | 1279 | 1152 | 1109 | - | - |
| **60** | 1188 | 919 | 844 | 891 | 821 | 868 | 1123 | 1179 | 1184 | 910 | 906 | 947 |
| **70** | 1248 | 1198 | 908 | 872 | 902 | 866 | 1273 | 1227 | 1247 | 1202 | 899 | 866 |
| **80** | 1572 | 1612 | 796 | 1112 | 816 | 836 | 1731 | 1906 | 1192 | 1309 | 896 | 981 |
| **90** | 1650 | 1709 | 818 | 1154 | 826 | 855 | 1806 | 2003 | 1220 | 1351 | 903 | 999 |
| **100** | 1600 | 1655 | 1162 | 1199 | 921 | 1292 | 1667 | 1841 | 1664 | 1838 | 1107 | 1223 |
| **110** | 1617 | 1683 | 1172 | 1216 | 927 | 1308 | 1683 | 1867 | 1676 | 1860 | 1113 | 1236 |
| **120** | 1600 | 1581 | 1098 | 1627 | 1128 | 1115 | 1681 | 1867 | 1724 | 1910 | 1177 | 1301 |

**Table 41. Point weights (lbs) — RTPF condensers, 50 Hz, extra efficiency — with pump package (no buffer tank)**

| Size (tons) | Isolator location | | | | | | | | | | | |
|---|---|---|---|---|---|---|---|---|---|---|---|---|
| | Aluminum Fins | | | | | | Copper Fins | | | | | |
| | 1 | 2 | 3 | 4 | 5 | 6 | 1 | 2 | 3 | 4 | 5 | 6 |
| **Units without Partial Heat Recovery** | | | | | | | | | | | | |
| **20** | 830 | 698 | 600 | 514 | - | - | 923 | 788 | 705 | 613 | - | - |
| **26** | 912 | 649 | 564 | 586 | - | - | 946 | 797 | 727 | 626 | - | - |
| **30** | 853 | 859 | 848 | 590 | - | - | 1049 | 917 | 928 | 796 | - | - |
| **35** | 968 | 920 | 912 | 597 | - | - | 1243 | 899 | 913 | 882 | - | - |
| **40** | 1229 | 1155 | 979 | 925 | - | - | 1332 | 1436 | 1262 | 1028 | - | - |
| **52** | 1240 | 1192 | 999 | 964 | - | - | 1430 | 1387 | 1197 | 1154 | - | - |
| **60** | 1239 | 966 | 854 | 903 | 801 | 850 | 1346 | 1274 | 1035 | 983 | 1055 | 1002 |
| **70** | 1297 | 1248 | 919 | 883 | 884 | 848 | 1384 | 1339 | 1313 | 1268 | 944 | 911 |
| **110** | 1306 | 1735 | 1328 | 1179 | 989 | 1200 | 1596 | 1780 | 1649 | 1833 | 1134 | 1257 |
| **120** | 1271 | 1847 | 1244 | 1204 | 1218 | 1178 | 1754 | 1743 | 1673 | 1661 | 1062 | 1581 |
| **Units with Partial Heat Recovery** | | | | | | | | | | | | |
| **20** | 891 | 654 | 548 | 589 | - | - | 924 | 803 | 712 | 629 | - | - |
| **26** | 914 | 663 | 569 | 604 | - | - | 947 | 813 | 734 | 642 | - | - |
| **30** | 858 | 882 | 853 | 606 | - | - | 1056 | 939 | 931 | 814 | - | - |
| **35** | 973 | 943 | 917 | 613 | - | - | 1250 | 920 | 916 | 900 | - | - |
| **40** | 1222 | 1148 | 1035 | 980 | - | - | 1409 | 1344 | 1234 | 1168 | - | - |
| **52** | 1233 | 1184 | 1055 | 1020 | - | - | 1423 | 1379 | 1253 | 1209 | - | - |
| **60** | 1221 | 952 | 877 | 924 | 854 | 901 | 1216 | 1272 | 1278 | 1003 | 1000 | 1041 |
| **70** | 1281 | 1232 | 941 | 905 | 935 | 899 | 1366 | 1321 | 1341 | 1295 | 992 | 959 |
| **110** | 1617 | 1683 | 1172 | 1216 | 927 | 1308 | 1683 | 1867 | 1676 | 1860 | 1113 | 1236 |
| **120** | 1600 | 1581 | 1098 | 1627 | 1128 | 1115 | 1681 | 1867 | 1724 | 1910 | 1177 | 1301 |

**Table 42. Point weights (lbs) — RTPF condensers, 50 Hz, high efficiency — with pump package and buffer tank options**

| Size (tons) | Isolator location | | | | | | | | | | | |
|---|---|---|---|---|---|---|---|---|---|---|---|---|
| | Aluminum Fins | | | | | | Copper Fins | | | | | |
| | 1 | 2 | 3 | 4 | 5 | 6 | 1 | 2 | 3 | 4 | 5 | 6 |
| **Units without Partial Heat Recovery** | | | | | | | | | | | | |
| **20** | 617 | 419 | 1644 | 1589 | - | - | 610 | 544 | 1784 | 1588 | - | - |
| **26** | 638 | 431 | 1668 | 1601 | - | - | 629 | 558 | 1810 | 1598 | - | - |
| **30** | 657 | 586 | 1861 | 1646 | - | - | 841 | 566 | 1863 | 1840 | - | - |
| **35** | 862 | 557 | 1835 | 1743 | - | - | 859 | 724 | 2024 | 1750 | - | - |
| **40** | 735 | 881 | 2280 | 2010 | - | - | 953 | 920 | 2320 | 2228 | - | - |
| **52** | 843 | 822 | 2204 | 2146 | - | - | 972 | 950 | 2334 | 2275 | - | - |
| **60** | 679 | 651 | 1252 | 1195 | 1744 | 1659 | 869 | 829 | 1239 | 1186 | 1928 | 1848 |
| **70** | 877 | 851 | 1200 | 1163 | 1804 | 1749 | 1002 | 975 | 1319 | 1282 | 1920 | 1864 |
| **80** | 1872 | 2089 | 1223 | 1368 | 884 | 990 | 2131 | 2206 | 1654 | 1710 | 829 | 1167 |
| **90** | 1875 | 2150 | 1270 | 1642 | 942 | 814 | 2206 | 2301 | 1684 | 1755 | 834 | 1185 |
| **100** | 1700 | 2272 | 1773 | 1778 | 1230 | 1233 | 2309 | 2541 | 1626 | 1800 | 1523 | 1697 |
| **110** | 1713 | 2300 | 1785 | 1797 | 1237 | 1245 | 2325 | 2568 | 1636 | 1818 | 1530 | 1712 |
| **120** | 1872 | 2259 | 1808 | 1631 | 1164 | 1568 | 2329 | 2575 | 1672 | 1856 | 1599 | 1783 |
| **Units with Partial Heat Recovery** | | | | | | | | | | | | |
| **20** | 624 | 429 | 1645 | 1611 | - | - | 615 | 556 | 1787 | 1609 | - | - |
| **26** | 574 | 511 | 1740 | 1552 | - | - | 634 | 569 | 1813 | 1619 | - | - |
| **30** | 668 | 604 | 1860 | 1668 | - | - | 853 | 582 | 1861 | 1863 | - | - |
| **35** | 874 | 574 | 1832 | 1766 | - | - | 868 | 743 | 2024 | 1770 | - | - |
| **40** | 817 | 784 | 2246 | 2155 | - | - | 946 | 912 | 2376 | 2284 | - | - |
| **52** | 836 | 814 | 2260 | 2201 | - | - | 964 | 942 | 2390 | 2330 | - | - |
| **60** | 669 | 640 | 1263 | 1206 | 1801 | 1716 | 857 | 818 | 1253 | 1199 | 1984 | 1904 |
| **70** | 865 | 839 | 1213 | 1176 | 1860 | 1805 | 991 | 963 | 1332 | 1295 | 1976 | 1920 |
| **80** | 1827 | 2361 | 1274 | 1237 | 965 | 938 | 2220 | 2297 | 1666 | 1724 | 815 | 1149 |
| **90** | 1961 | 2246 | 1285 | 1652 | 930 | 795 | 2295 | 2392 | 1696 | 1769 | 820 | 1167 |
| **100** | 1780 | 2367 | 1801 | 1796 | 1214 | 1211 | 2467 | 2452 | 1850 | 1839 | 1234 | 1839 |
| **110** | 1794 | 2396 | 1813 | 1816 | 1221 | 1223 | 2484 | 2479 | 1861 | 1857 | 1239 | 1855 |
| **120** | 1950 | 2356 | 1837 | 1653 | 1150 | 1542 | 2418 | 2663 | 1695 | 1879 | 1580 | 1764 |

**Table 43. Point weights (lbs) — RTPF condensers, 50 Hz, extra efficiency — with pump package and buffer tank options**

| Size (tons) | Isolator location | | | | | | | | | | | |
|---|---|---|---|---|---|---|---|---|---|---|---|---|
| | Aluminum Fins | | | | | | Copper Fins | | | | | |
| | 1 | 2 | 3 | 4 | 5 | 6 | 1 | 2 | 3 | 4 | 5 | 6 |
| **Units without Partial Heat Recovery** | | | | | | | | | | | | |
| **20** | 635 | 437 | 1662 | 1607 | - | - | 660 | 594 | 1834 | 1638 | - | - |
| **26** | 656 | 449 | 1686 | 1619 | - | - | 679 | 608 | 1861 | 1648 | - | - |
| **30** | 682 | 611 | 1886 | 1671 | - | - | 911 | 636 | 1933 | 1910 | - | - |
| **35** | 887 | 582 | 1860 | 1768 | - | - | 928 | 794 | 2094 | 1820 | - | - |
| **40** | 771 | 918 | 2316 | 2046 | - | - | 1054 | 1020 | 2421 | 2328 | - | - |
| **52** | 879 | 858 | 2240 | 2182 | - | - | 1072 | 1050 | 2435 | 2375 | - | - |
| **60** | 712 | 684 | 1285 | 1228 | 1777 | 1692 | 962 | 923 | 1333 | 1279 | 2021 | 1941 |
| **70** | 910 | 884 | 1233 | 1197 | 1837 | 1782 | 1096 | 1069 | 1413 | 1376 | 2013 | 1958 |
| **110** | 1713 | 2300 | 1785 | 1797 | 1237 | 1245 | 2325 | 2568 | 1636 | 1818 | 1530 | 1712 |
| **120** | 1872 | 2259 | 1808 | 1631 | 1164 | 1568 | 2329 | 2575 | 1672 | 1856 | 1599 | 1783 |
| **Units with Partial Heat Recovery** | | | | | | | | | | | | |
| **20** | 642 | 447 | 1663 | 1630 | - | - | 665 | 606 | 1837 | 1659 | - | - |
| **26** | 592 | 530 | 1758 | 1570 | - | - | 684 | 620 | 1863 | 1669 | - | - |
| **30** | 693 | 629 | 1885 | 1692 | - | - | 923 | 652 | 1931 | 1933 | - | - |
| **35** | 899 | 599 | 1857 | 1791 | - | - | 938 | 813 | 2094 | 1840 | - | - |
| **40** | 854 | 820 | 2283 | 2191 | - | - | 1046 | 1012 | 2477 | 2384 | - | - |
| **52** | 872 | 851 | 2296 | 2238 | - | - | 1065 | 1043 | 2491 | 2430 | - | - |
| **60** | 702 | 673 | 1296 | 1239 | 1834 | 1749 | 950 | 911 | 1346 | 1292 | 2077 | 1997 |
| **70** | 898 | 872 | 1246 | 1210 | 1893 | 1838 | 1084 | 1057 | 1426 | 1389 | 2069 | 2014 |
| **110** | 1794 | 2396 | 1813 | 1816 | 1221 | 1223 | 2484 | 2479 | 1861 | 1857 | 1239 | 1855 |
| **120** | 1950 | 2356 | 1837 | 1653 | 1150 | 1542 | 2418 | 2663 | 1695 | 1879 | 1580 | 1764 |

### Units with Microchannel Condenser

**Table 44. Point weights (lbs) — microchannel condenser units**

| Size (tons) | Isolator location | | | | | | | | | | | | | | | |
|---|---|---|---|---|---|---|---|---|---|---|---|---|---|---|---|---|
| | 60 Hz Units | | | | | | | | 50 Hz Units | | | | | | | |
| | 1 | 2 | 3 | 4 | 5 | 6 | 7 | 8 | 1 | 2 | 3 | 4 | 5 | 6 | 7 | 8 |
| **Base Unit** | | | | | | | | | | | | | | | | |
| **20** | 670 | 608 | 364 | 334 | - | - | - | - | 681 | 618 | 354 | 324 | - | - | - | - |
| **26** | 705 | 627 | 375 | 338 | - | - | - | - | 705 | 627 | 375 | 338 | - | - | - | - |
| **30** | 782 | 700 | 480 | 441 | - | - | - | - | 782 | 700 | 480 | 441 | - | - | - | - |
| **35** | 793 | 864 | 637 | 337 | - | - | - | - | 793 | 864 | 637 | 337 | - | - | - | - |
| **40** | 920 | 1133 | 693 | 566 | - | - | - | - | 920 | 1133 | 693 | 566 | - | - | - | - |
| **52** | 930 | 1171 | 715 | 605 | - | - | - | - | 930 | 1171 | 715 | 605 | - | - | - | - |
| **60** | 853 | 916 | 793 | 856 | 354 | 383 | - | - | 853 | 916 | 793 | 856 | 354 | 383 | - | - |
| **70** | 1145 | 1083 | 735 | 692 | 324 | 637 | - | - | 1145 | 1083 | 735 | 692 | 324 | 637 | - | - |
| **80** | 1160 | 1613 | 755 | 713 | 339 | 319 | - | - | 1160 | 1613 | 755 | 713 | 339 | 319 | - | - |
| **90** | 1225 | 1719 | 787 | 751 | 350 | 332 | - | - | 1224 | 1719 | 787 | 750 | 350 | 332 | - | - |
| **100** | 1231 | 1756 | 769 | 746 | 679 | 656 | - | - | 1245 | 1773 | 765 | 740 | 662 | 637 | - | - |
| **110** | 1260 | 1806 | 776 | 756 | 673 | 653 | - | - | 1258 | 1803 | 775 | 755 | 671 | 651 | - | - |
| **120** | 1277 | 1826 | 782 | 760 | 672 | 650 | - | - | 1276 | 1825 | 781 | 759 | 672 | 650 | - | - |
| **130** | 1158 | 1258 | 836 | 910 | 556 | 890 | 549 | 599 | - | - | - | - | - | - | - | - |
| **Unit with Pump Package (No Buffer Tank)** | | | | | | | | | | | | | | | | |
| **20** | 765 | 647 | 632 | 514 | - | - | - | - | - | - | - | - | - | - | - | - |
| **26** | 798 | 669 | 646 | 517 | - | - | - | - | - | - | - | - | - | - | - | - |
| **30** | 851 | 717 | 776 | 642 | - | - | - | - | - | - | - | - | - | - | - | - |
| **35** | 965 | 778 | 829 | 642 | - | - | - | - | - | - | - | - | - | - | - | - |
| **40** | 1232 | 957 | 842 | 937 | - | - | - | - | - | - | - | - | - | - | - | - |
| **52** | 1159 | 1078 | 948 | 892 | - | - | - | - | - | - | - | - | - | - | - | - |
| **60** | 1010 | 964 | 835 | 789 | 690 | 643 | - | - | - | - | - | - | - | - | - | - |
| **70** | 1199 | 1164 | 790 | 765 | 749 | 724 | - | - | - | - | - | - | - | - | - | - |
| **80** | 1263 | 1420 | 788 | 898 | 716 | 826 | - | - | - | - | - | - | - | - | - | - |
| **90** | 1339 | 1516 | 814 | 939 | 722 | 846 | - | - | - | - | - | - | - | - | - | - |
| **100** | 1253 | 1297 | 1178 | 1223 | 774 | 1150 | - | - | - | - | - | - | - | - | - | - |
| **110** | 1284 | 1339 | 1186 | 1241 | 763 | 1146 | - | - | - | - | - | - | - | - | - | - |
| **120** | 1280 | 1322 | 1268 | 1310 | 879 | 1298 | - | - | - | - | - | - | - | - | - | - |
| **130** | 946 | 845 | 949 | 1157 | 954 | 1164 | 957 | 1168 | - | - | - | - | - | - | - | - |
| **Units with Pump Package and Buffer Tank** | | | | | | | | | | | | | | | | |
| **20** | 640 | 317 | 1625 | 1678 | - | - | - | - | - | - | - | - | - | - | - | - |
| **26** | 676 | 334 | 1634 | 1685 | - | - | - | - | - | - | - | - | - | - | - | - |
| **30** | 624 | 526 | 1870 | 1667 | - | - | - | - | - | - | - | - | - | - | - | - |
| **35** | 728 | 596 | 1933 | 1657 | - | - | - | - | - | - | - | - | - | - | - | - |
| **40** | 775 | 718 | 2179 | 2059 | - | - | - | - | - | - | - | - | - | - | - | - |
| **52** | 792 | 750 | 2194 | 2104 | - | - | - | - | - | - | - | - | - | - | - | - |
| **60** | 666 | 636 | 1061 | 1018 | 1688 | 1626 | - | - | - | - | - | - | - | - | - | - |
| **70** | 798 | 780 | 1142 | 1117 | 1678 | 1641 | - | - | - | - | - | - | - | - | - | - |
| **80** | 1700 | 1918 | 1149 | 1298 | 799 | 903 | - | - | - | - | - | - | - | - | - | - |
| **90** | 1775 | 2015 | 1177 | 1340 | 806 | 921 | - | - | - | - | - | - | - | - | - | - |
| **100** | 1863 | 1864 | 1241 | 1821 | 1213 | 1213 | - | - | - | - | - | - | - | - | - | - |
| **110** | 1895 | 1906 | 1247 | 1839 | 1203 | 1210 | - | - | - | - | - | - | - | - | - | - |
| **120** | 1679 | 1910 | 1694 | 1925 | 1165 | 1322 | - | - | - | - | - | - | - | - | - | - |
| **130** | 1253 | 1140 | 1239 | 1126 | 1218 | 1657 | 1207 | 1640 | - | - | - | - | - | - | - | - |

## Units with Wind Load Option

- Individual point loads for units with wind load option do not exceed 2520 lb.
- See “Mounting Locations,” p. 26 for mounting point locations dimensions.
  - Mounting locations 1 though 8 are the same as units without wind load rating. See “Unit without Wind Load Rating,” p. 26 for these dimensions.
  - Mounting locations W1 through W4 are additional locations required for wind load rating. See “Units with Wind Load Rating,” p. 29.

**Table 45. Elastomeric pad quantities**

| Unit Size (ton) | Quantity Required |
|---|---|
| 40, 52 | 8 |
| 60, 70 | 8 |
| 80, 90 | 10 |
| 100, 110, 120 | 8 |
| 130 | 10 |

**Figure 29. Mounting point identification, units with wind load option**

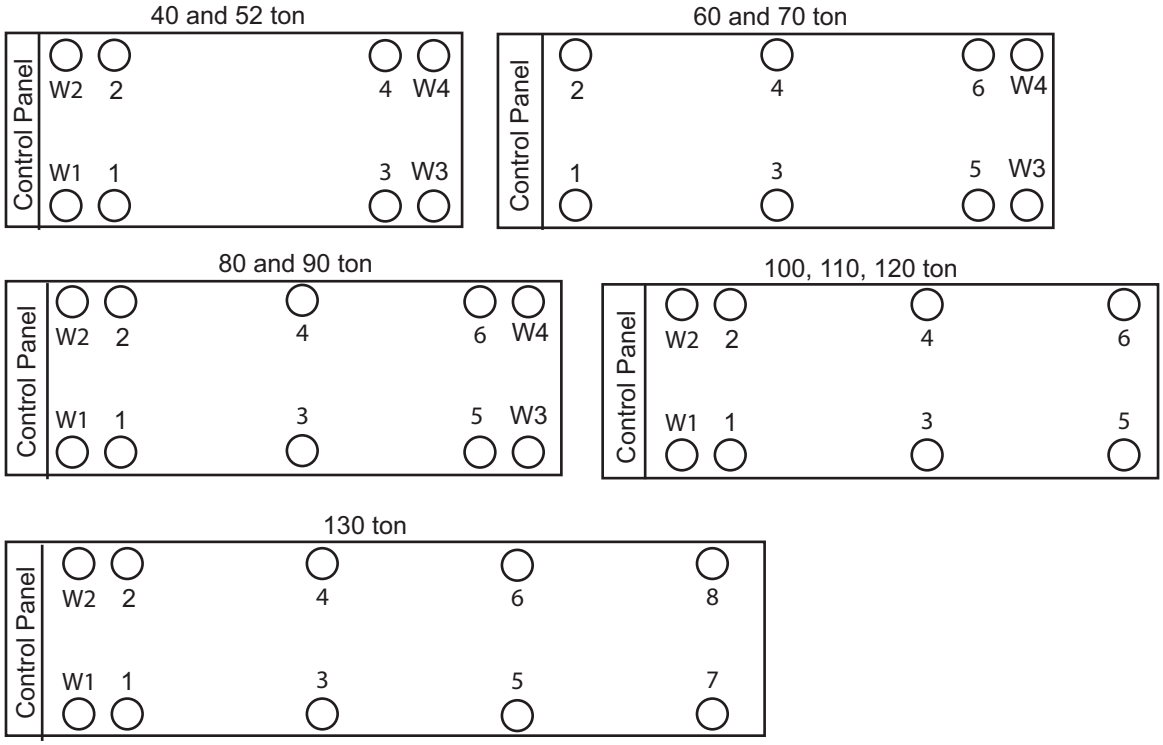

# Evaporator Piping

Evaporator water connections are grooved.

Thoroughly flush all water piping to the CGAM unit before making the final piping connections to the unit.

Components and layout will vary slightly, depending on the location of connections and the water source.

**NOTICE:**

**Equipment Damage!**

**If using any commercial flushing/cleaning solution, construct a temporary bypass around the unit to prevent damage to internal components of the evaporator/condenser. Trane assumes no responsibility for equipment damage caused by flushing/cleaning solutions or water-born debris.**

**NOTICE:**

**Proper Water Treatment!**

**The use of untreated or improperly treated water in a could result in scaling, erosion, corrosion, algae or slime. It is recommended that the services of a qualified water treatment specialist be engaged to determine what water treatment, if any, is required. Trane assumes no responsibility for equipment failures which result from untreated or improperly treated water, or saline or brackish water.**

## Drainage

Locate the unit near a large capacity drain for water vessel drain-down during shutdown or repair. Drain connections are provided in the chilled water outlet line of evaporator. All local and national codes apply.

A vent is provided on the chilled water inlet line to the evaporator. Additional vents at high points in the piping must be provided to bleed air from the chilled water system. Install necessary pressure gauges to monitor the entering and leaving chilled water pressures.

Provide shutoff valves in lines to the gauges to isolate them from the system when they are not in use. Use rubber vibration eliminators to prevent vibration transmission through the water lines.

If desired, install thermometers in the lines to monitor entering and leaving water temperatures. Install a balancing valve in the leaving water line to control water flow balance. Install shutoff valves on both the entering and leaving water lines so that the evaporator can be isolated for service.

## Evaporator Piping Components

Piping components include all devices and controls used to provide proper water system operation and unit operating safety. See Figure 30, p. 65. These components are listed below.

**Figure 30. Water piping components**

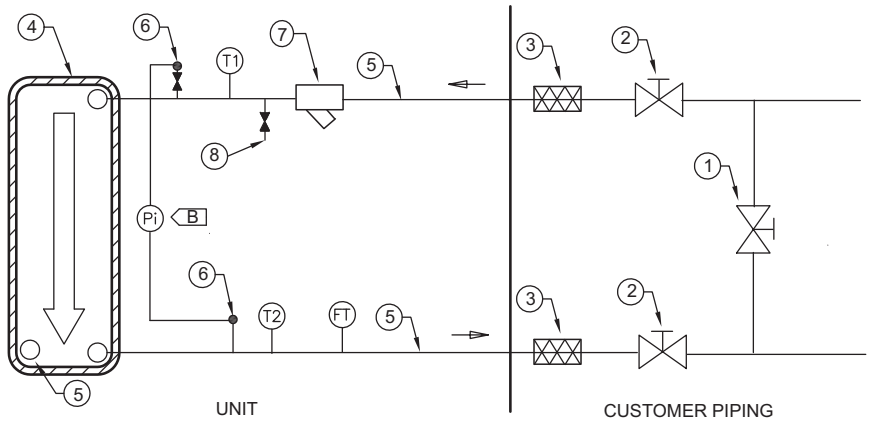


**Table 46. Water piping components**

| Item | Description | Item | Description |
|---|---|---|---|
| 1 | Bypass Valve | Pi | Gauge |
| 2 | Isolation Valves | FT | Water Flow Switch |
| 3 | Vibration Eliminators | T1 | Evap Water Inlet Temp Sensor |
| 4 | Evaporator Heat Exchanger | T2 | Evap Water Outlet Temp Sensor |
| 5 | Water Heaters | B | Brazed plate differential pressure gauge and piping not supplied. Must account for water head height difference when calculating brazed plate pressure differential. |
| 6 | Valve for Pressure Point | | |
| 7 | Strainer | | |
| 8 | Water Heater (slant 20-35T units only) | | |

## Entering Chilled Water Piping

- Air vents (to bleed air from system)
- Water pressure gauges with shutoff valves
- Vibration eliminators
- Shutoff (isolation) valves
- Thermometers (if desired)
- Relief valve

## Leaving Chilled Water Piping

- Air vents (to bleed air from system)
- Water pressure gauges with shutoff valves
- Vibration eliminators
- Shutoff (isolation) valves
- Thermometers (if desired)
- Balancing valve

**NOTICE:**

**Water Damage!**

**Failure to follow instructions could result in water spray which could cause equipment and/or property damage. Standard pressure is 72.5 Psig for all factory installed components on the suction side of water pump. Standard pressure of components on the discharge side of water pump is 145 Psig. You MUST drain the system FIRST before releasing the pressure.**

## Water Strainer

The water strainer is factory-installed with taps for the pressure gauges on the inlet and outlet. Install pressure gauges in order to measure differential pressure across the filter. This will help to determine when it is necessary to clean the water strainer.

## Flow Switch

**NOTICE:**

**Equipment Damage!**

**Flow switch is on a 24V circuit. Do NOT apply 120V to the flow switch. Incorrect voltage application could cause damage to the flow switch.**

The flow switch is factory-installed and programmed based on the operating conditions submitted with the order. The leaving evaporator temperature, fluid type and fluid concentration affect the selected flow switch. If the operating conditions on the job site change, the flow switch may need to be replaced.

The sensor head includes 3 LEDs, two yellow and one green. Wait 15 seconds after power is applied to the sensor before evaluating LEDs for flow status. When wired correctly and flow is established, only the green LED should be lit. Following are the LED indicators:

- Green ON, both yellow OFF — Flow
- Green and outside yellow ON — No Flow
- Center yellow ON continuously — Miswire

Factory installed jumper wire W9 must be removed if using auxiliary contacts and/or additional proof of flow. See schematics in CGAM-SVE01*-EN for more details.

***Note:*** *Use caution when connecting the auxiliary contacts. Terminals 1X5-3 and 1X5-9 are to be used for field connections of auxiliary contacts. Inadvertent use of 1X5-4 and 1X5-9 will result in a FALSE FLOW indication*

**NOTICE:**

**Equipment Damage!**

**Failure to follow instructions when wiring auxiliary contacts could cause equipment damage.**

If using auxiliary flow sensing, both yellow LEDs come on initially when flow is stopped. The center yellow LED will turn off after approximately 7 seconds. The LED indicators are otherwise the same as indicated above.

## Indexing Flow Switch

To properly index the flow switch, the following requirements must be met:

- The dot/dimple must be at a position no greater than 90° off Index.
- The torque must be between 22 ft-lb minimum and 74 ft-lb maximum.
- A minimum distance of 5x pipe diameter must be maintained between flow switch and any bends, valves, changes in cross sections, etc.

**Figure 31. Proper flow switch indexing**

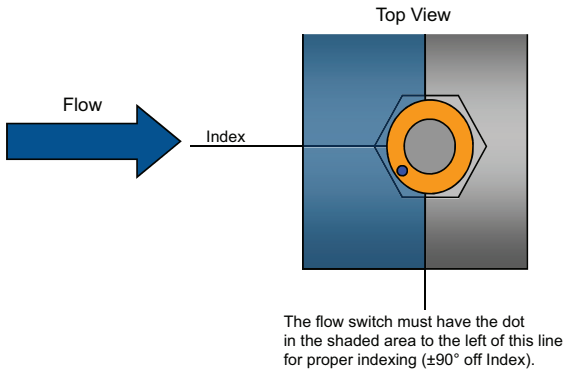

## Evaporator Label

The BPHE evaporator label, including barcode, is located under the insulation, in the locations shown in Figure 32, p. 67. Insulation backing over this area has not been removed, so that it can be rolled back to access BPHE label.

**Figure 32. BPHE label locations**

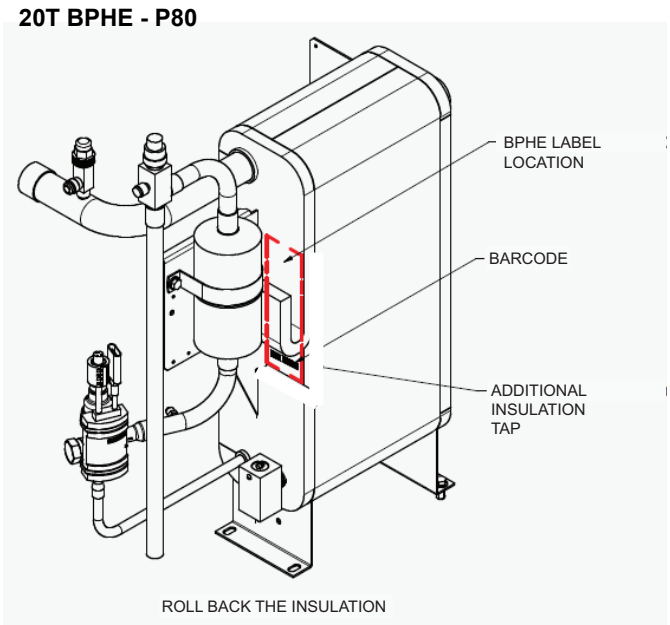


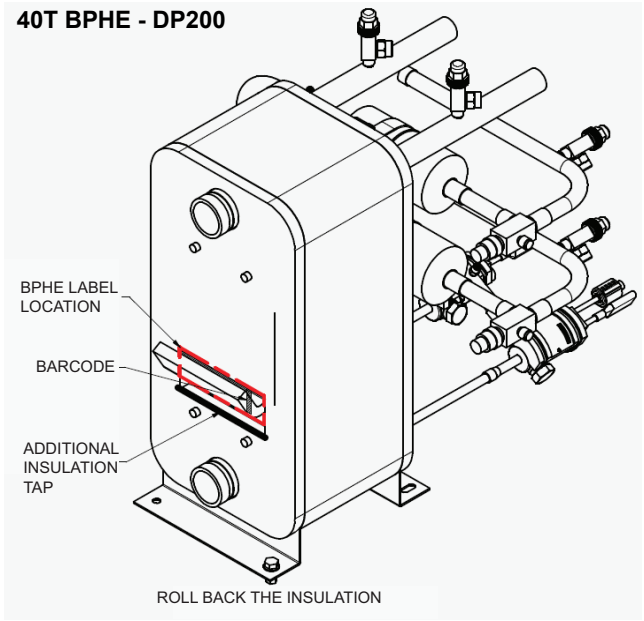


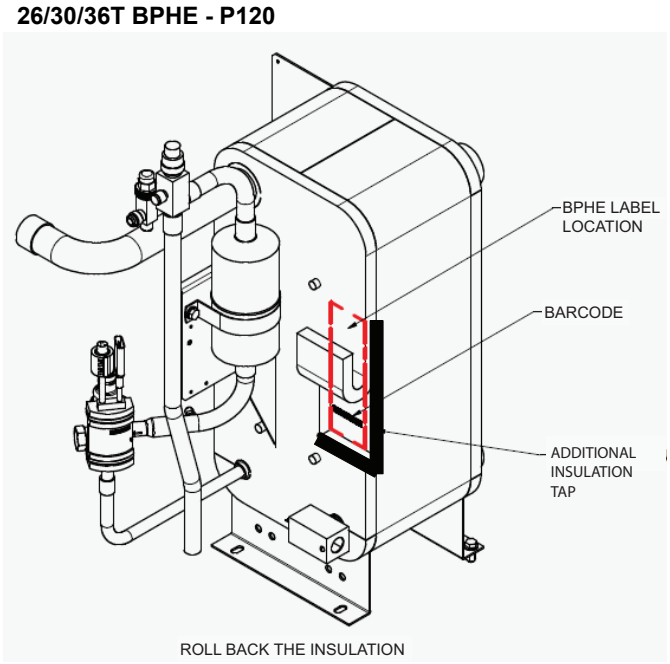


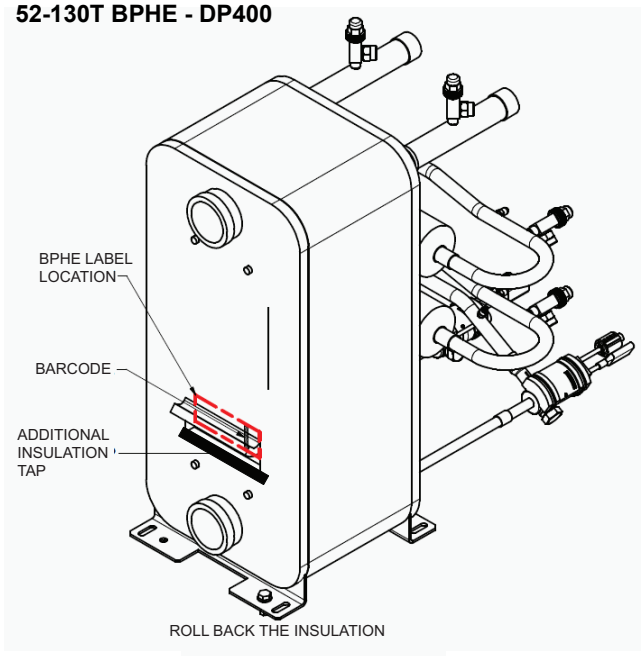

## Pressure Drop Curves

***Notes:*** *See tables in "General Information," p. 10 for the following:*

- *Limit values for overlapping curves.*
- *Higher minimum flow rates required for units with evaporater leaving water temperature between 40 and 41.9°F.*

**Figure 33. Total unit pressure drop curves (60 Hz)**

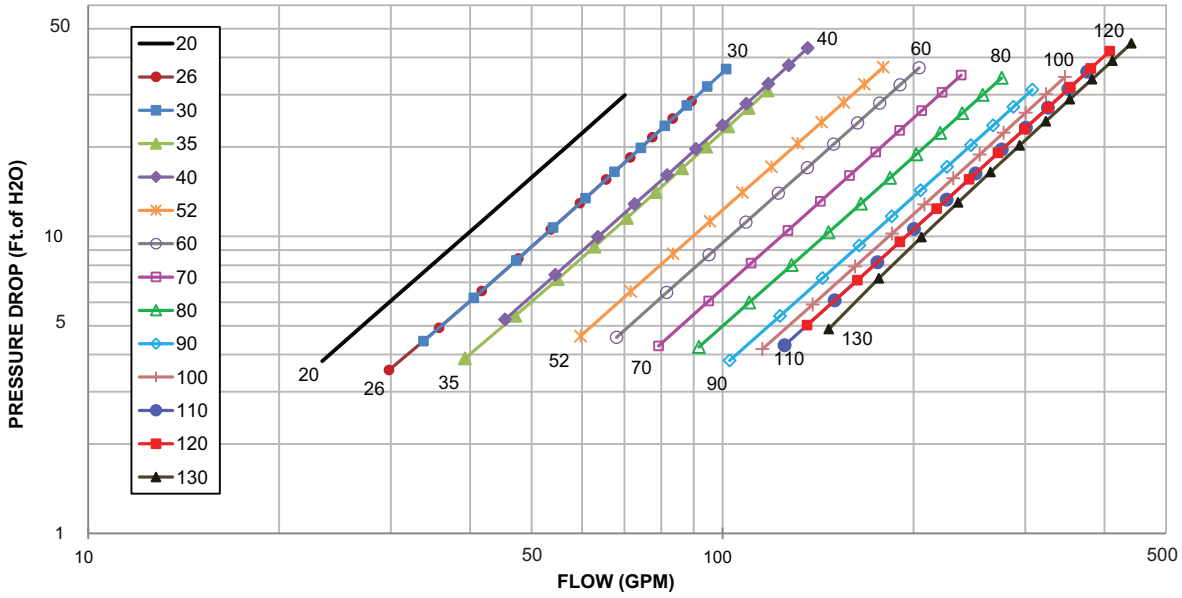


**Figure 34. Total unit pressure drop curves (50 Hz)**

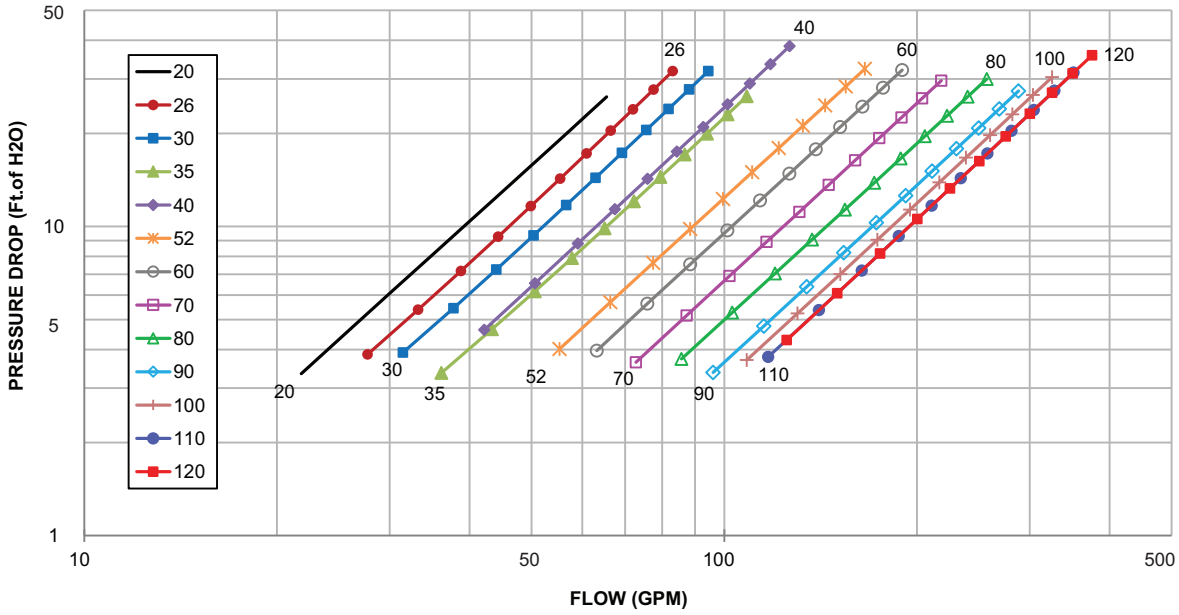

## Ambient Freeze Avoidance

***Note:*** *CGAM chillers use brazed plate heat exchanges, which are NOT at risk for refrigerant migration freeze. Chiller must only be protected from freeze due to low ambient conditions.*

One or more of the ambient freeze avoidance methods in Table 47 must be used to protect the CGAM chiller from ambient freeze damage.

**Table 47. CGAM ambient freeze avoidance methods**

| Method | Protects to ambient temperature | Notes |
|---|---|---|
| Water pump control | Down to 0°F | • CH530 controller can start the pump when the ambient temperatures drops to prevent freezing. For this option the pump must to be controlled by the CGAM unit and this function must be validated.<br>• Water circuit valves need to stay open at all times.<br>• ***If dual high head pump package option is selected, the chiller MUST control the pumps.*** |
| Heaters | Down to -20°F | • ***This option is not applicable for units ordered with "No Freeze Protection" (model number digit 18 = X). Factory mounted heaters are NOT installed on these units, and one of the other forms of freeze protection must be used.***<br>• For units with freeze protection selected (model number digit 18 is "1"), heaters are factory-installed on the evaporator and water piping and will protect them from freezing in ambient temperatures down to -20°F (-29°C).<br>• Install heat tape on all water piping, pumps, and other components that may be damaged if exposed to freezing temperatures. Heat tape must be designed for low ambient temperature applications. Heat tape selection should be based on the lowest expected ambient temperature.<br>• ***See NOTICE below for important information.*** |
| Freeze Inhibitor | Varies.<br>See "Low Evap Refrigerant Cutout/ Percent Glycol Recommendations," p. 69 | • Freeze protection can be accomplished by adding sufficient glycol to protect against freezing below the lowest ambient expected. |
| Drain Water Circuit | Below -20°F | • Shut off the power supply to the unit and to all heaters.<br>• Purge the water circuit.<br>• Blow out the evaporator to ensure no liquid is left in the evaporator.<br>• ***By default the CH530 freeze protection control is enabled and will request the start of the chilled water pump with ambient temperatures less than the evaporator low leaving water temperature setpoint. The pump remains ON until the minimum evaporator water temperature is greater than low leaving water temperature setpoint plus 7°C. The minimum on time for the pump is 5 minutes. If you do NOT want the CH530 to start the pump when the ambient temperature drops to freezing, disable this freeze protection control.*** |

***NOTICE:***

### Equipment Damage!

**All heaters have separate power from the unit. All heaters must be energized or the CH530 must control the pumps when the unit is off (unless the water circuit is drained or sufficient glycol is used). In the event of prolonged power loss, neither heaters nor CH530 control of the pumps will protect the evaporator from catastrophic damage. In order to provide freeze protection in the event of a power loss you MUST drain the evaporator, use sufficient freeze inhibitor in the evaporator or provide back-up power for pump.**

## Low Evap Refrigerant Cutout/ Percent Glycol Recommendations

The table below shows the low evaporator temperature cutout for different glycol levels.

Additional glycol beyond the recommendations will adversely effect unit performance. The unit efficiency will be reduced and the saturated evaporator temperature will be reduced. For some operating conditions this effect can be significant.

If additional glycol is used, then use the actual percent glycol to establish the low refrigerant cutout setpoint.

**Table 48. Low evap refrigerant temp cutout and low water temp cutout — ethylene glycol**

| % Glycol | Solution Freeze Point(°F) | Low Refrig Temp Cutout (°F) | Low Water Temp Cutout (°F) | FLOW >= 1.2 GPM/TON | | | FLOW >= 1.5 GPM/TON | | |
|---|---|---|---|---|---|---|---|---|---|
| | | | | Min Chilled Water Setpoint (°F) | | | Min Chilled Water Setpoint(°F) | | |
| | | | | Number of compressors | | | Number of compressors | | |
| | | | | 2 | 4 | 6 | 2 | 4 | 6 |
| 0 | 32 | 22 | 36 | 42 | 42 | 42 | 41 | 40 | 40 |
| 1 | 31.6 | 21.6 | 35.6 | 42 | 40.1 | 39.2 | 40.6 | 39.1 | 38.6 |
| 2 | 31.0 | 21.0 | 35.0 | 42 | 39.5 | 38.6 | 40.0 | 38.5 | 38.0 |
| 3 | 30.3 | 20.3 | 34.3 | 41.3 | 38.8 | 38.0 | 39.3 | 37.8 | 37.3 |
| 4 | 29.7 | 19.7 | 33.7 | 40.7 | 38.2 | 37.3 | 38.7 | 37.2 | 36.7 |
| 5 | 29.0 | 19.0 | 33.0 | 40.0 | 37.5 | 36.7 | 38.0 | 36.5 | 36.0 |
| 6 | 28.3 | 18.3 | 32.3 | 39.3 | 36.8 | 36.0 | 37.3 | 35.8 | 35.3 |
| 7 | 27.6 | 17.6 | 31.6 | 38.6 | 36.1 | 35.3 | 36.6 | 35.1 | 34.6 |
| 8 | 26.9 | 16.9 | 30.9 | 37.9 | 35.4 | 34.6 | 35.9 | 34.4 | 33.9 |
| 9 | 26.2 | 16.2 | 30.2 | 37.2 | 34.7 | 33.9 | 35.2 | 33.7 | 33.2 |
| 10 | 25.5 | 15.5 | 29.5 | 36.5 | 34.0 | 33.1 | 34.5 | 33.0 | 32.5 |
| 11 | 24.7 | 14.7 | 28.7 | 35.7 | 33.2 | 32.4 | 33.7 | 32.2 | 31.7 |
| 12 | 23.9 | 13.9 | 27.9 | 34.9 | 32.4 | 31.6 | 32.9 | 31.4 | 30.9 |
| 13 | 23.1 | 13.1 | 27.1 | 34.1 | 31.6 | 30.8 | 32.1 | 30.6 | 30.1 |
| 14 | 22.3 | 12.3 | 26.3 | 33.3 | 30.8 | 30.0 | 31.3 | 29.8 | 29.3 |
| 15 | 21.5 | 11.5 | 25.5 | 32.5 | 30.0 | 29.1 | 30.5 | 29.0 | 28.5 |
| 16 | 20.6 | 10.6 | 24.6 | 31.6 | 29.1 | 28.2 | 29.6 | 28.1 | 27.6 |
| 17 | 19.7 | 9.7 | 23.7 | 30.7 | 28.2 | 27.3 | 28.7 | 27.2 | 26.7 |
| 18 | 18.7 | 8.7 | 22.7 | 29.7 | 27.2 | 26.4 | 27.7 | 26.2 | 25.7 |
| 19 | 17.8 | 7.8 | 21.8 | 28.8 | 26.3 | 25.5 | 26.8 | 25.3 | 24.8 |
| 20 | 16.8 | 6.8 | 20.8 | 27.8 | 25.3 | 24.5 | 25.8 | 24.3 | 23.8 |
| 21 | 15.8 | 5.8 | 19.8 | 26.8 | 24.3 | 23.5 | 24.8 | 23.3 | 22.8 |
| 22 | 14.7 | 4.7 | 18.7 | 25.7 | 23.2 | 22.4 | 23.7 | 22.2 | 21.7 |
| 23 | 13.7 | 3.7 | 17.7 | 24.7 | 22.2 | 21.3 | 22.7 | 21.2 | 20.7 |
| 24 | 12.5 | 2.5 | 16.5 | 23.5 | 21.0 | 20.2 | 21.5 | 20.0 | 19.5 |
| 25 | 11.4 | 1.4 | 15.4 | 22.4 | 19.9 | 19.1 | 20.4 | 18.9 | 18.4 |
| 26 | 10.2 | 0.2 | 14.2 | 21.2 | 18.7 | 17.9 | 19.2 | 17.7 | 17.2 |
| 27 | 9.0 | -1.0 | 13.0 | 20.0 | 17.5 | 16.7 | 18.0 | 16.5 | 16.0 |
| 28 | 7.7 | -2.3 | 11.7 | 18.7 | 16.2 | 15.4 | 16.7 | 15.2 | 14.7 |
| 29 | 6.4 | -3.6 | 10.4 | 17.4 | 14.9 | 14.1 | 15.4 | 13.9 | 13.4 |
| 30 | 5.1 | -4.9 | 9.1 | 16.1 | 13.6 | 12.8 | 14.1 | 12.6 | 12.1 |
| 31 | 3.7 | -6.3 | 7.7 | 14.7 | 12.2 | 11.4 | 12.7 | 11.2 | 10.7 |
| 32 | 2.3 | -7.7 | 6.3 | 13.3 | 10.8 | 9.9 | 11.3 | 9.8 | 9.3 |
| 33 | 0.8 | -9.2 | 4.8 | 11.8 | 9.3 | 8.5 | 9.8 | 8.3 | 7.8 |
| 34 | -0.7 | -10.7 | 3.3 | 10.3 | 7.8 | 7.0 | 8.3 | 6.8 | 6.3 |
| 35 | -2.3 | -12.3 | 1.7 | 8.7 | 6.2 | 5.4 | 6.7 | 5.2 | 4.7 |
| 36 | -3.9 | -13.9 | 0.1 | 7.1 | 4.6 | 3.8 | 5.1 | 3.6 | 3.1 |
| 37 | -5.6 | -15.6 | -1.6 | 5.4 | 2.9 | 2.1 | 3.4 | 1.9 | 1.4 |
| 38 | -7.3 | -17.3 | -3.3 | 3.7 | 1.2 | 0.4 | 1.7 | 0.2 | 0.0 |
| 39 | -9.0 | -19.0 | -5.0 | 2.0 | 0.0 | 0.0 | 0.0 | 0.0 | 0.0 |
| 40 | -10.8 | -20.8 | -6.8 | 0.2 | 0.0 | 0.0 | 0.0 | 0.0 | 0.0 |
| 41 | -12.7 | -21.0 | -7.0 | 0.0 | 0.0 | 0.0 | 0.0 | 0.0 | 0.0 |
| 42 | -14.6 | -21.0 | -7.0 | 0.0 | 0.0 | 0.0 | 0.0 | 0.0 | 0.0 |
| 43 | -16.6 | -21.0 | -7.0 | 0.0 | 0.0 | 0.0 | 0.0 | 0.0 | 0.0 |

**Table 48. Low evap refrigerant temp cutout and low water temp cutout — ethylene glycol (continued)**

| % Glycol | Solution Freeze Point(°F) | Low Refrig Temp Cutout (°F) | Low Water Temp Cutout (°F) | FLOW >= 1.2 GPM/TON | | | FLOW >= 1.5 GPM/TON | | |
|---|---|---|---|---|---|---|---|---|---|
| | | | | Min Chilled Water Setpoint (°F) | | | Min Chilled Water Setpoint(°F) | | |
| | | | | Number of compressors | | | Number of compressors | | |
| | | | | 2 | 4 | 6 | 2 | 4 | 6 |
| 44 | -18.6 | -21.0 | -7.0 | 0.0 | 0.0 | 0.0 | 0.0 | 0.0 | 0.0 |
| 45 | -20.7 | -21.0 | -7.0 | 0.0 | 0.0 | 0.0 | 0.0 | 0.0 | 0.0 |
| 46 | -22.9 | -21.0 | -7.0 | 0.0 | 0.0 | 0.0 | 0.0 | 0.0 | 0.0 |
| 47 | -25.1 | -21.0 | -7.0 | 0.0 | 0.0 | 0.0 | 0.0 | 0.0 | 0.0 |
| 48 | -27.3 | -21.0 | -7.0 | 0.0 | 0.0 | 0.0 | 0.0 | 0.0 | 0.0 |
| 49 | -29.7 | -21.0 | -7.0 | 0.0 | 0.0 | 0.0 | 0.0 | 0.0 | 0.0 |
| 50 | -32.1 | -21.0 | -7.0 | 0.0 | 0.0 | 0.0 | 0.0 | 0.0 | 0.0 |
| 51 | -34.5 | -21.0 | -7.0 | 0.0 | 0.0 | 0.0 | 0.0 | 0.0 | 0.0 |
| 52 | -37.1 | -21.0 | -7.0 | 0.0 | 0.0 | 0.0 | 0.0 | 0.0 | 0.0 |
| 53 | -39.7 | -21.0 | -7.0 | 0.0 | 0.0 | 0.0 | 0.0 | 0.0 | 0.0 |
| 54 | -42.3 | -21.0 | -7.0 | 0.0 | 0.0 | 0.0 | 0.0 | 0.0 | 0.0 |
| 55 | -45.0 | -21.0 | -7.0 | 0.0 | 0.0 | 0.0 | 0.0 | 0.0 | 0.0 |

**Table 49. Low evap refrigerant temp cutout and low water temp cutout — propylene glycol**

| % Glycol | Solution Freeze Point(°F) | Low Refrig Temp Cutout (°F) | Low Water Temp Cutout (°F) | FLOW >= 1.2 GPM/TON | | | FLOW >= 1.5 GPM/TON | | |
|---|---|---|---|---|---|---|---|---|---|
| | | | | Min Chilled Water Setpoint (°F) | | | Min Chilled Water Setpoint(°F) | | |
| | | | | Number of compressors | | | Number of compressors | | |
| | | | | 2 | 4 | 6 | 2 | 4 | 6 |
| 0 | 32 | 22 | 36 | 42 | 42 | 42 | 41 | 40 | 40 |
| 1 | 31.6 | 21.6 | 35.6 | 42 | 40.1 | 39.2 | 40.6 | 39.1 | 38.6 |
| 2 | 31.0 | 21.0 | 35.0 | 42 | 39.5 | 38.7 | 40.0 | 38.5 | 38.0 |
| 3 | 30.4 | 20.4 | 34.4 | 41.4 | 38.9 | 38.1 | 39.4 | 37.9 | 37.4 |
| 4 | 29.9 | 19.9 | 33.9 | 40.9 | 38.4 | 37.5 | 38.9 | 37.4 | 36.9 |
| 5 | 29.3 | 19.3 | 33.3 | 40.3 | 37.8 | 37.0 | 38.3 | 36.8 | 36.3 |
| 6 | 28.7 | 18.7 | 32.7 | 39.7 | 37.2 | 36.4 | 37.7 | 36.2 | 35.7 |
| 7 | 28.1 | 18.1 | 32.1 | 39.1 | 36.6 | 35.8 | 37.1 | 35.6 | 35.1 |
| 8 | 27.6 | 17.6 | 31.6 | 38.6 | 36.1 | 35.2 | 36.6 | 35.1 | 34.6 |
| 9 | 27.0 | 17.0 | 31.0 | 38.0 | 35.5 | 34.6 | 36.0 | 34.5 | 34.0 |
| 10 | 26.4 | 16.4 | 30.4 | 37.4 | 34.9 | 34.0 | 35.4 | 33.9 | 33.4 |
| 11 | 25.7 | 15.7 | 29.7 | 36.7 | 34.2 | 33.4 | 34.7 | 33.2 | 32.7 |
| 12 | 25.1 | 15.1 | 29.1 | 36.1 | 33.6 | 32.8 | 34.1 | 32.6 | 32.1 |
| 13 | 24.4 | 14.4 | 28.4 | 35.4 | 32.9 | 32.1 | 33.4 | 31.9 | 31.4 |
| 14 | 23.8 | 13.8 | 27.8 | 34.8 | 32.3 | 31.4 | 32.8 | 31.3 | 30.8 |
| 15 | 23.1 | 13.1 | 27.1 | 34.1 | 31.6 | 30.7 | 32.1 | 30.6 | 30.1 |
| 16 | 22.4 | 12.4 | 26.4 | 33.4 | 30.9 | 30.0 | 31.4 | 29.9 | 29.4 |
| 17 | 21.6 | 11.6 | 25.6 | 32.6 | 30.1 | 29.3 | 30.6 | 29.1 | 28.6 |
| 18 | 20.9 | 10.9 | 24.9 | 31.9 | 29.4 | 28.5 | 29.9 | 28.4 | 27.9 |
| 19 | 20.1 | 10.1 | 24.1 | 31.1 | 28.6 | 27.8 | 29.1 | 27.6 | 27.1 |
| 20 | 19.3 | 9.3 | 23.3 | 30.3 | 27.8 | 26.9 | 28.3 | 26.8 | 26.3 |
| 21 | 18.4 | 8.4 | 22.4 | 29.4 | 26.9 | 26.1 | 27.4 | 25.9 | 25.4 |
| 22 | 17.6 | 7.6 | 21.6 | 28.6 | 26.1 | 25.2 | 26.6 | 25.1 | 24.6 |
| 23 | 16.7 | 6.7 | 20.7 | 27.7 | 25.2 | 24.3 | 25.7 | 24.2 | 23.7 |
| 24 | 15.7 | 5.7 | 19.7 | 26.7 | 24.2 | 23.4 | 24.7 | 23.2 | 22.7 |
| 25 | 14.8 | 4.8 | 18.8 | 25.8 | 23.3 | 22.4 | 23.8 | 22.3 | 21.8 |

**Table 49. Low evap refrigerant temp cutout and low water temp cutout — propylene glycol (continued)**

| % Glycol | Solution Freeze Point(°F) | Low Refrig Temp Cutout (°F) | Low Water Temp Cutout (°F) | FLOW >= 1.2 GPM/TON | | | FLOW >= 1.5 GPM/TON | | |
|---|---|---|---|---|---|---|---|---|---|
| | | | | Min Chilled Water Setpoint (°F) | | | Min Chilled Water Setpoint(°F) | | |
| | | | | Number of compressors | | | Number of compressors | | |
| | | | | 2 | 4 | 6 | 2 | 4 | 6 |
| 26 | 13.8 | 3.8 | 17.8 | 24.8 | 22.3 | 21.4 | 22.8 | 21.3 | 20.8 |
| 27 | 12.7 | 2.7 | 16.7 | 23.7 | 21.2 | 20.4 | 21.7 | 20.2 | 19.7 |
| 28 | 11.6 | 1.6 | 15.6 | 22.6 | 20.1 | 19.3 | 20.6 | 19.1 | 18.6 |
| 29 | 10.5 | 0.5 | 14.5 | 21.5 | 19.0 | 18.2 | 19.5 | 18.0 | 17.5 |
| 30 | 9.3 | -0.7 | 13.3 | 20.3 | 17.8 | 17.0 | 18.3 | 16.8 | 16.3 |
| 31 | 8.1 | -1.9 | 12.1 | 19.1 | 16.6 | 15.8 | 17.1 | 15.6 | 15.1 |
| 32 | 6.8 | -3.2 | 10.8 | 17.8 | 15.3 | 14.5 | 15.8 | 14.3 | 13.8 |
| 33 | 5.5 | -4.5 | 9.5 | 16.5 | 14.0 | 13.2 | 14.5 | 13.0 | 12.5 |
| 34 | 4.1 | -5.9 | 8.1 | 15.1 | 12.6 | 11.8 | 13.1 | 11.6 | 11.1 |
| 35 | 2.7 | -7.3 | 6.7 | 13.7 | 11.2 | 10.4 | 11.7 | 10.2 | 9.7 |
| 36 | 1.3 | -8.7 | 5.3 | 12.3 | 9.8 | 8.9 | 10.3 | 8.8 | 8.3 |
| 37 | -0.3 | -10.3 | 3.7 | 10.7 | 8.2 | 7.4 | 8.7 | 7.2 | 6.7 |
| 38 | -1.8 | -11.8 | 2.2 | 9.2 | 6.7 | 5.8 | 7.2 | 5.7 | 5.2 |
| 39 | -3.5 | -13.5 | 0.5 | 7.5 | 5.0 | 4.2 | 5.5 | 4.0 | 3.5 |
| 40 | -5.2 | -15.2 | -1.2 | 5.8 | 3.3 | 2.5 | 3.8 | 2.3 | 1.8 |
| 41 | -6.9 | -16.9 | -2.9 | 4.1 | 1.6 | 0.7 | 2.1 | 0.6 | 0.1 |
| 42 | -8.8 | -18.8 | -4.8 | 2.2 | 0.0 | 0.0 | 0.2 | 0.0 | 0.0 |
| 43 | -10.7 | -20.7 | -6.7 | 0.3 | 0.0 | 0.0 | 0.0 | 0.0 | 0.0 |
| 44 | -12.6 | -21.0 | -7.0 | 0.0 | 0.0 | 0.0 | 0.0 | 0.0 | 0.0 |
| 45 | -14.6 | -21.0 | -7.0 | 0.0 | 0.0 | 0.0 | 0.0 | 0.0 | 0.0 |
| 46 | -16.7 | -21.0 | -7.0 | 0.0 | 0.0 | 0.0 | 0.0 | 0.0 | 0.0 |
| 47 | -18.9 | -21.0 | -7.0 | 0.0 | 0.0 | 0.0 | 0.0 | 0.0 | 0.0 |
| 48 | -21.1 | -21.0 | -7.0 | 0.0 | 0.0 | 0.0 | 0.0 | 0.0 | 0.0 |
| 49 | -23.4 | -21.0 | -7.0 | 0.0 | 0.0 | 0.0 | 0.0 | 0.0 | 0.0 |
| 50 | -25.8 | -21.0 | -7.0 | 0.0 | 0.0 | 0.0 | 0.0 | 0.0 | 0.0 |
| 51 | -28.3 | -21.0 | -7.0 | 0.0 | 0.0 | 0.0 | 0.0 | 0.0 | 0.0 |
| 52 | -30.8 | -21.0 | -7.0 | 0.0 | 0.0 | 0.0 | 0.0 | 0.0 | 0.0 |
| 53 | -33.4 | -21.0 | -7.0 | 0.0 | 0.0 | 0.0 | 0.0 | 0.0 | 0.0 |
| 54 | -36.1 | -21.0 | -7.0 | 0.0 | 0.0 | 0.0 | 0.0 | 0.0 | 0.0 |
| 55 | -38.9 | -21.0 | -7.0 | 0.0 | 0.0 | 0.0 | 0.0 | 0.0 | 0.0 |

## Performance Adjustment Factors

Concentration and type of glycol used will affect unit performance. If operating conditions, including concentration of freeze inhibitor, have changed since the unit was ordered, contact sales representative to rerun selection. See Figure 35, p. 73 through Figure 40, p. 73 for approximate adjustment factors.

**Figure 35. Ethylene - compressor power adjustment**

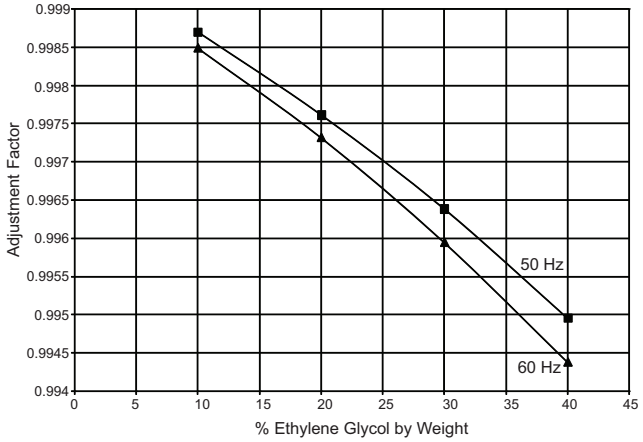


**Figure 36. Propylene - compressor power adjustment**

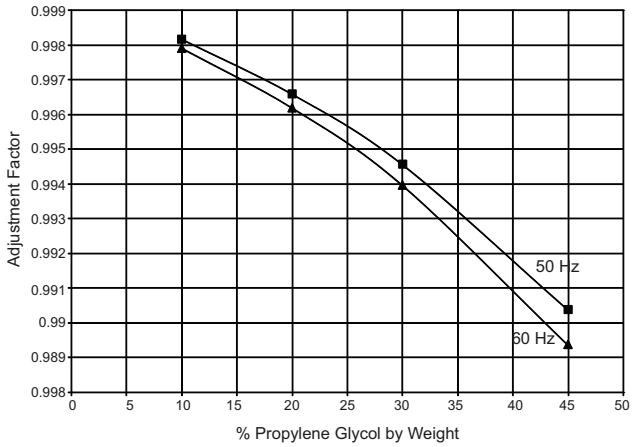


**Figure 37. Ethylene - GPM adjustment**

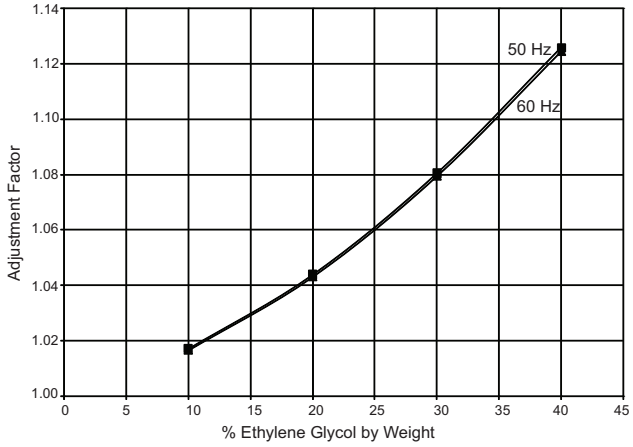


**Figure 38. Propylene - GPM adjustment**

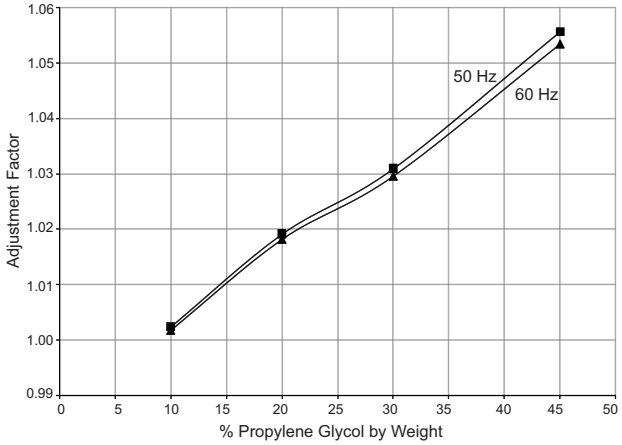


**Figure 39. Ethylene - capacity adjustment**

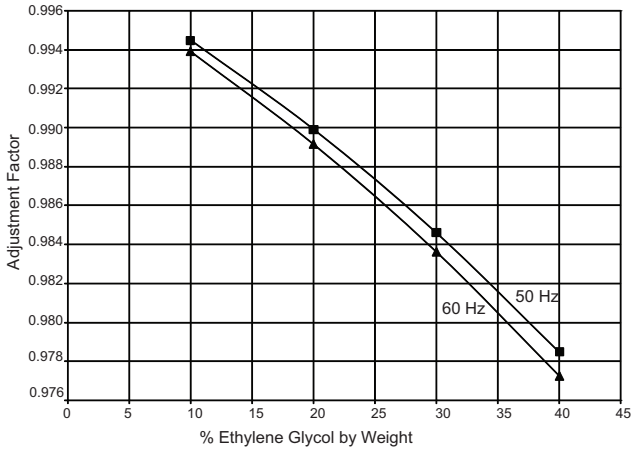


**Figure 40. Propylene - capacity adjustment**

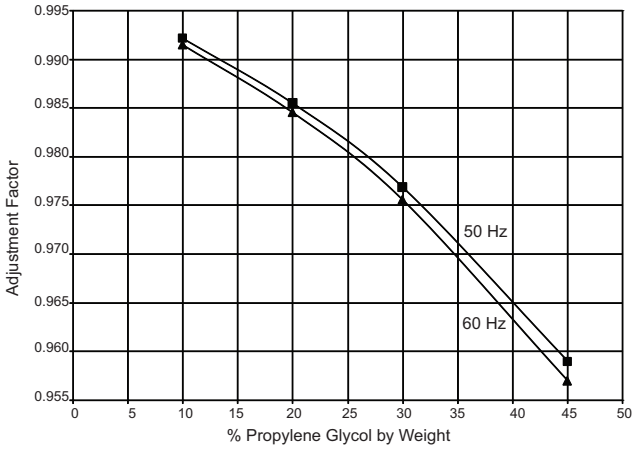

# Partial Heat Recovery

The partial heat recovery is comprised of an auxiliary heat exchanger installed in the discharge line between the compressor and the air -cooled condenser. The heat exchanger cools compressor discharge gas and rejects the energy to a separate water loop for hot water applications. The chiller can simultaneously produce chilled and hot water.

The heating capacity is driven by the cooling demand on the chiller, the condensing temperature and the flow rate through the heat exchanger.

The partial heat recovery includes:

- Brazed plate heat exchanger
  - Units 20-35 Tons have a single braze plate heat exchanger. Units 40-130 Tons have two braze plate heat exchangers in parallel arrangement.
- Piping between the heat exchanger(s)
- Insulation of the heat exchanger(s) and water pipe
- Two temperature sensors to read the inlet/outlet hot water temperature information on the unit control display
- Heater on partial heat recovery heat exchanger(s) and water pipe
- Manual air vent
- Drain pipe

Water circulating inside the heat recovery heat exchanger should never be used for drinking water, it must be used through an indirect loop to heat or preheat hot water.

***Important:*** *The installation must comply with the rules and legislation applicable at the jobsite location regarding the use of drinkable water. The use of the water circulating in the heat recovery exchanger as drinkable water is not recommended. An intermediate heat exchanger should be used.*

The partial heat recovery pump must run at least three minutes after the partial heat recovery fan control is disabled. During the three minutes, water flow through the brazed plate heat exchanger will gradually be reduced and the unit can be switched to conventional cooling mode without partial heat recovery fan control.

***NOTICE:***

**Equipment Damage!**

**If the partial heat recovery heat exchanger is drained the heater must be turned off to avoid damaging the partial heater recovery heat exchanger. The heater should only be on when the heat recovery heat exchanger has water in it.**

## Partial Heat Recovery Piping

A field installed safety or relief valve on the water side is required with the partial heat recovery to prevent risks resulting from a failure of the thermostat.

A 16 mesh strainer must be installed close to the partial heat recovery heat exchanger entering water line to protect the heat exchanger.

The partial heat recovery water temperature should be controlled via an external devise such as a 3-way valve or variable speed pump. In addition, a water tank and additional heater is suggested in the partial heat recovery loop.

Insulate water lines and other portions of the heat recovery water loop to prevent heat loss and potential injury due exposure to a hot surface.

For recommended partial heat recovery piping see Figure 41, p. 75.

***NOTICE:***

**Proper Water Treatment!**

**The use of untreated or improperly treated water could result in scaling, erosion, corrosion, algae or slime. It is recommended that the services of a qualified water treatment specialist be engaged to determine what water treatment, if any, is required. Trane assumes no responsibility for equipment failures which result from untreated or improperly treated water, or saline or brackish water.**

***NOTICE:***

**Equipment Damage!**

**Do not use untreated or improperly treated water in the heat recovery water loop as it could damage to the unit. It will also cause inefficient operation and potential damage to the unit such as reduced heat transfer between water and refrigerant, increased water pressure drop and reduced water flow.**

**Figure 41. Partial heat recovery piping recommendations**

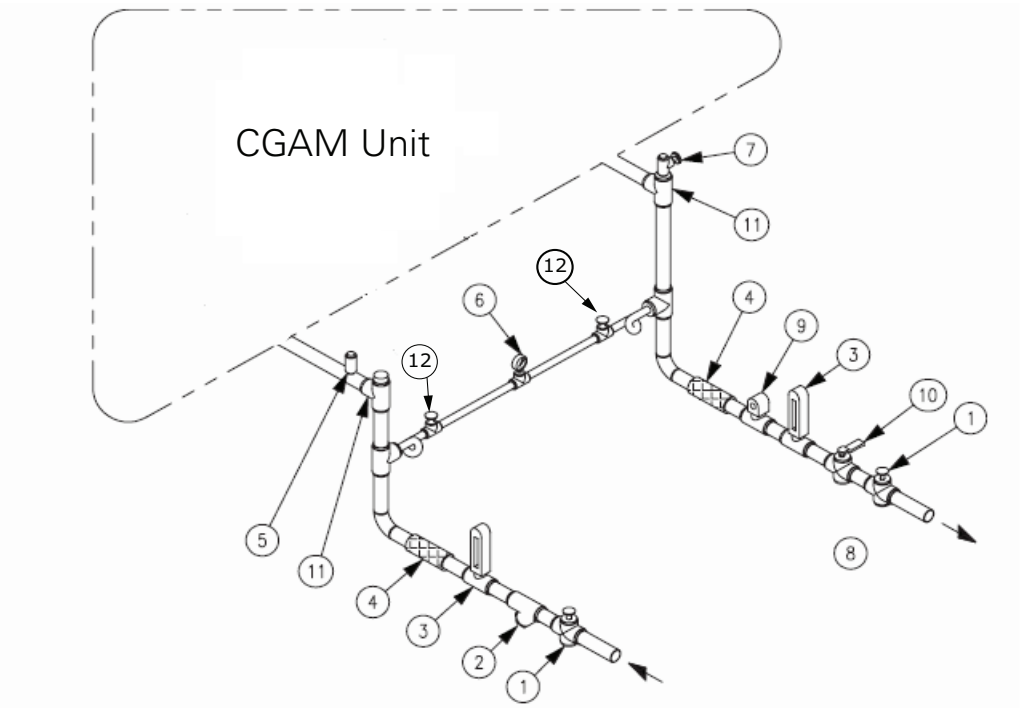


***Note:*** *In addition to those recommended for field piping, the CGAM unit includes factory installed manual air vent and water drain valve with partial heat recovery option. See "Partial Heat Recovery Components," p. 100 for locations.*

## Partial Heat Recovery Freeze Avoidance

The heat recovery condenser is insulated and a factory-installed heater is installed and will protect the heat exchanger from freezing in ambient temperatures down to -20°F (-29°C).

When the ambient temperature drops to approximately 39°F (3.9°C) the thermostat energizes the heaters.

***Note:*** *The inlet and outlet piping should be protected against freezing by one of the following methods:*

- Install heat tape on all field-installed water piping.

**OR**

- Add freeze inhibiting fluid to the partial heat recovery water loop.

## Partial Heat Recovery Pressure Drop Curves

**Figure 42. Partial heat recovery pressure drop curve — 60 Hz**

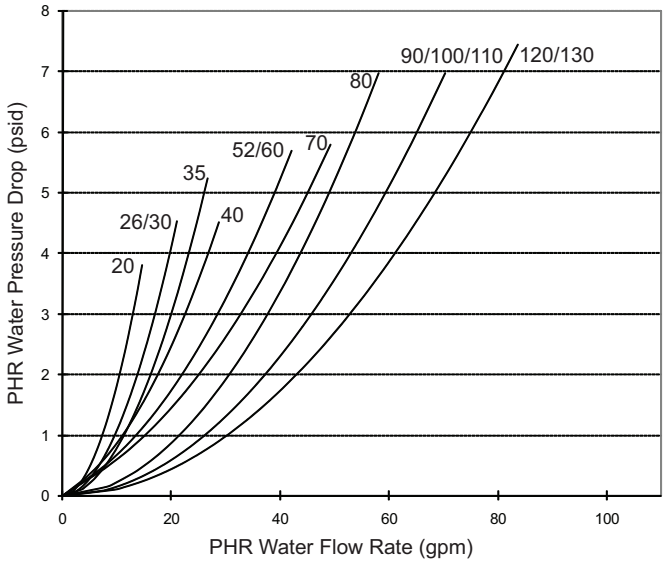


**Figure 43. Partial heat recovery pressure drop curve — 50 Hz**

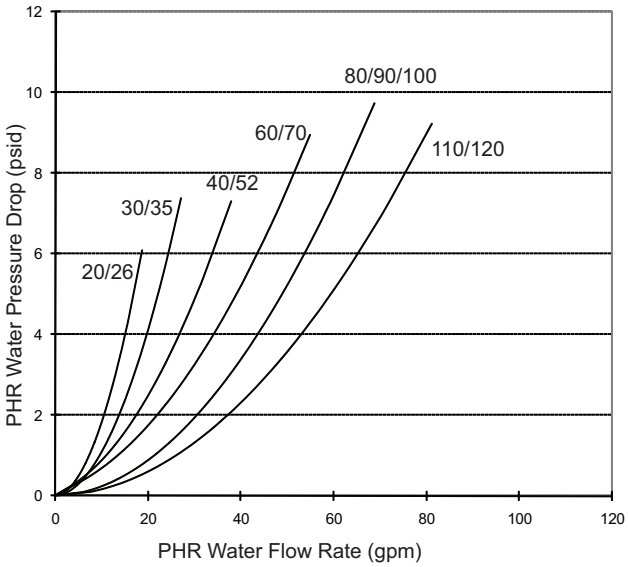


**Table 50. Partial heat recovery flow rates — 60 Hz**

| Size | | 20 | 26 | 30 | 35 | 40 | 52 | 60 | 70 | 80 | 90 | 100 | 110 | 120 | 130 |
|---|---|---|---|---|---|---|---|---|---|---|---|---|---|---|---|
| Nominal Flow Rate[a] | (gpm) | 13 | 19 | 18 | 24 | 26 | 39 | 37 | 50 | 46 | 59 | 61 | 70 | 83 | 79 |
| Maximum Flow Rate | (gpm) | 39 | 39 | 39 | 39 | 79 | 79 | 79 | 79 | 127 | 127 | 127 | 127 | 127 | 127 |

(a) Water temperature inlet 122°F, outlet 131°F

**Table 51. Partial heat recovery flow rates — 50 Hz**

| Size | | 20 | 26 | 30 | 35 | 40 | 52 | 60 | 70 | 80 | 90 | 100 | 110 | 120 | 130 |
|---|---|---|---|---|---|---|---|---|---|---|---|---|---|---|---|
| Nominal Flow Rate[a] | (gpm) | 11 | 15 | 16 | 20 | 21 | 30 | 32 | 40 | 39 | 47 | 48 | 58 | 65 | 11 |
| Maximum Flow Rate | (gpm) | 39 | 39 | 39 | 39 | 79 | 79 | 79 | 79 | 127 | 127 | 127 | 127 | 127 | 39 |

(a) Water temperature inlet 122°F, outlet 131°F

***Note:*** *Partial heat recovery may function at flow rates near zero. However, heat transfer performance is severely reduced and water flow distribution is poor.*

# Dual High Head Pump Package

Pump package includes: two high head pumps, VFD, expansion vessels, drainage valves, shut-off valves at entering and leaving connections. See Figure 45.

The pump package is single point power integrated into the chiller unit power with a separate factory wired control panel. The control of the pump is integrated into the chiller controller.

***Important:*** *When pump package is selected, the chiller MUST control the pumps.*

The CH530 displays evaporator pump starts and run-times. Freeze protection down to an ambient of -20°F (-29°C) is included as standard. The cold parts of the pump package will also be insulated. Designed with one redundant pump, the chiller controls both pumps through a lead/lag and failure/recovery functionality.

A variable speed drive is installed in an additional panel to control the pump. The inverter should be adjusted by the customer upon start up to balance the system flow and head requirements. The purpose is to save on wasted pump energy caused by a traditional balancing valve.

***Note:*** *Speed command is also available for customer-provided variable flow input.*

**Figure 44. Field water piping pump package unit**

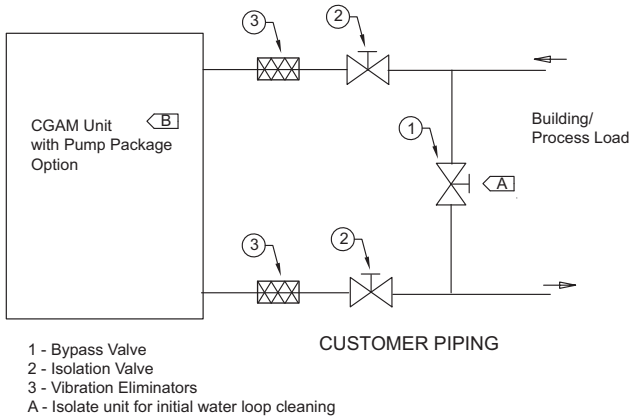


**Table 52. Field water piping components — unit with pump package option**

| Item | Description |
|---|---|
| 1 | Bypass Valve |
| 2 | Isolator Valve |
| 3 | Vibration Eliminator |
| A | Isolate unit for initial water loop cleaning |
| B | See Figure 45 for CGAM pump package unit schematic. |

**Figure 45. Pump package unit schematic**

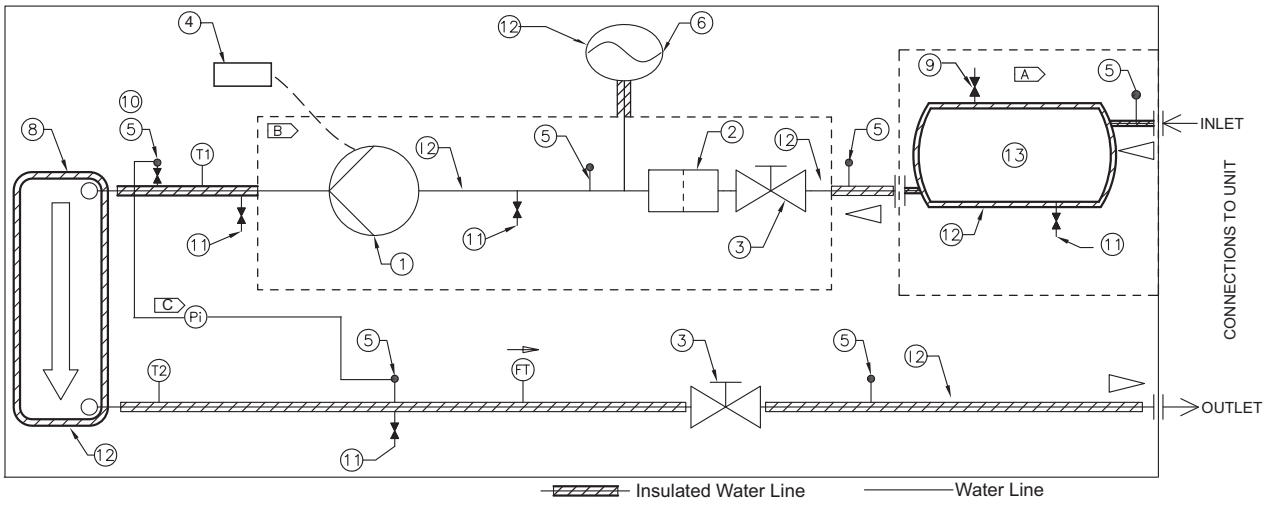


**Table 53. Pump package components**

| Item | Description | Item | Description | Item | Description |
|---|---|---|---|---|---|
| 1 | Centrifugal Pump (Dual pumps std) | 9 | Automatic Air Vent | Pi | Gauge |
| 2 | Water Strainer | 10 | Manual Air Bleed | FT | Water Flow Switch |
| 3 | Butterfly Valve | 11 | Drain Valve | T1 | Evap Water Inlet Temp Sensor |
| 4 | Inverter | 12 | Water Heater | T2 | Evap Water Outlet Temp Sensor |
| 5 | Valve for Pressure Point | 13 | Buffer Tank (Optional) | A | Optional Buffer Tank |
| 6 | Expansion Tank | | | B | Insulated Pump Box |
| 7 | N/A | | | C | Brazed plate differential pressure gauge and piping not supplied. Must account for water head height difference when calculating brazed plate pressure differential. |
| 8 | Evaporator heat exchanger | | | | |

# Pressure Drop Information - Units with Optional Pump Package

## Water only

### Factory Installed Pump Package - Pump Curves:

Figure 46 through Figure 49, p. 79 show manufacturer pump curves for factory-installed pump package.

**Figure 46. Pump curve, 20 to 52 ton units, water only**

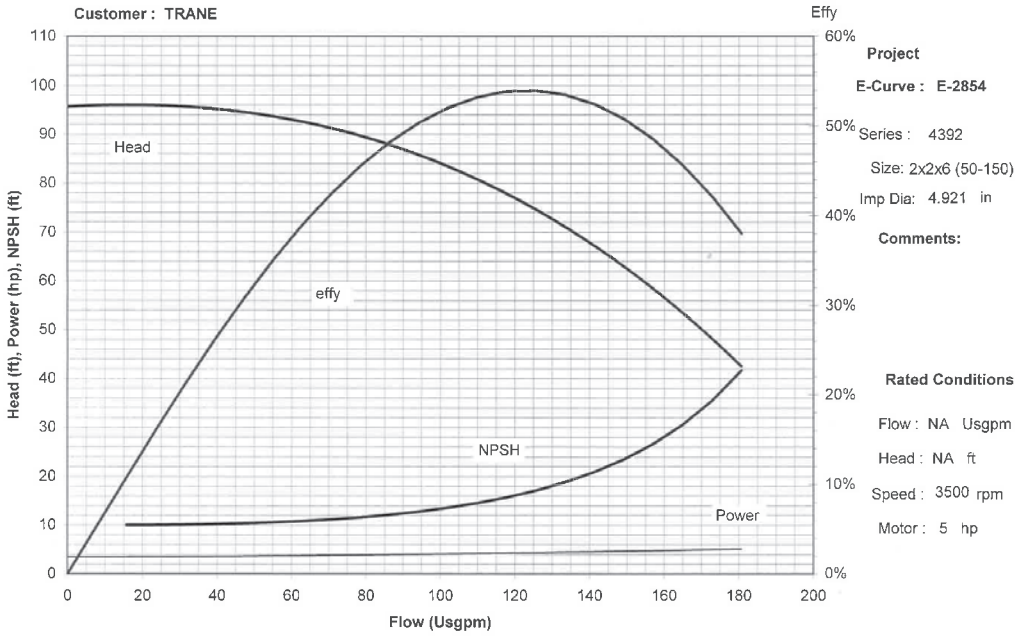


**Figure 47. Pump curve, 60 to 70 ton units, water only**

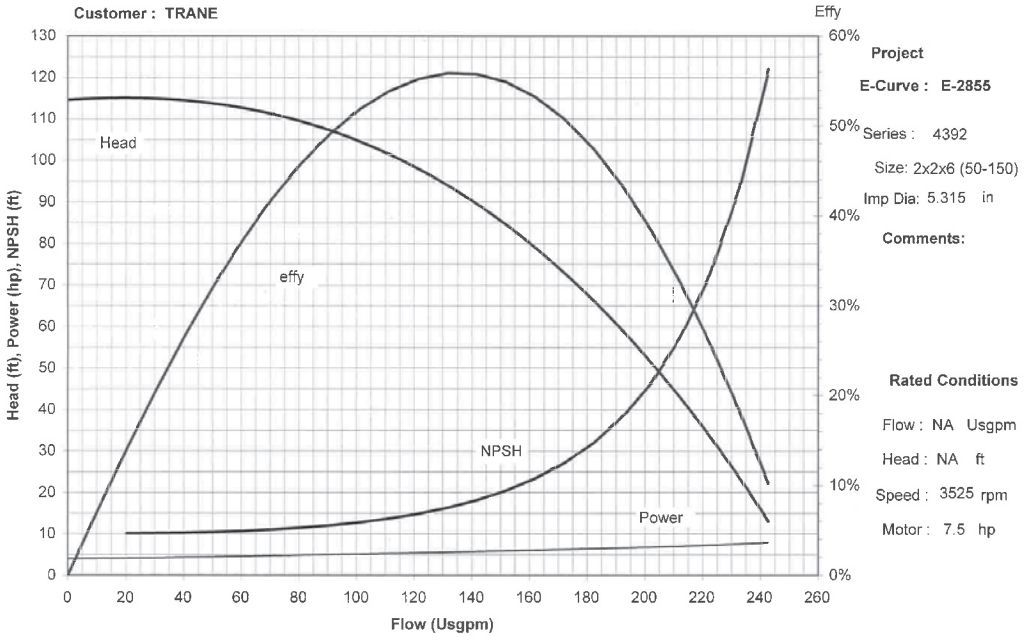

**Figure 48. Pump curve, 80 to 110 ton units, water only**

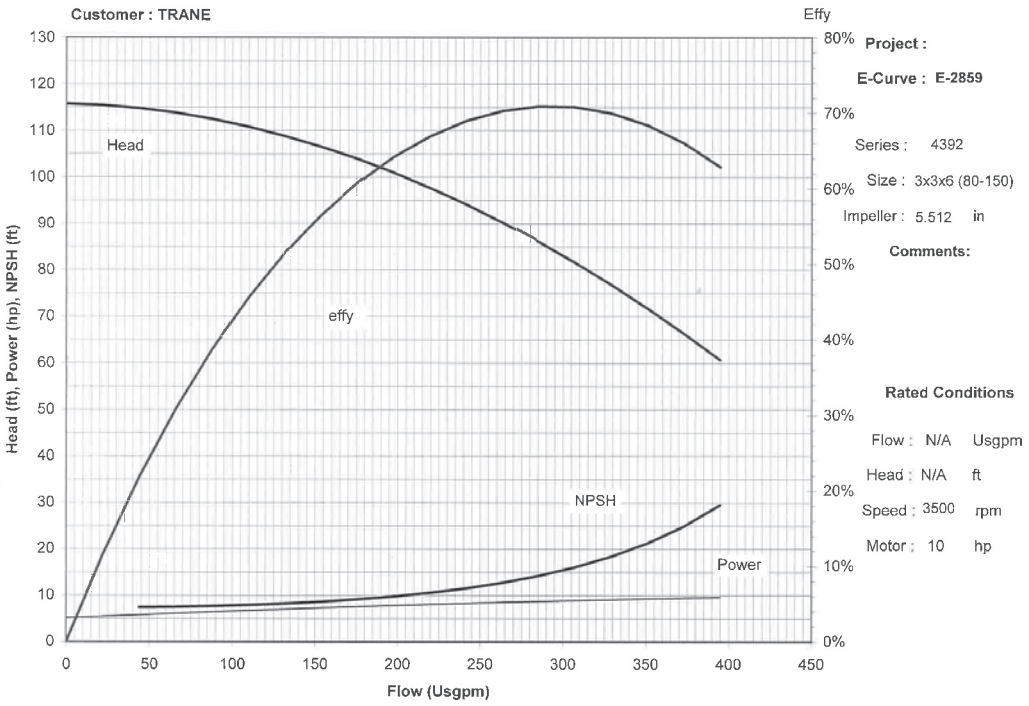


**Figure 49. Pump curve, 120 to 130 ton units, water only**

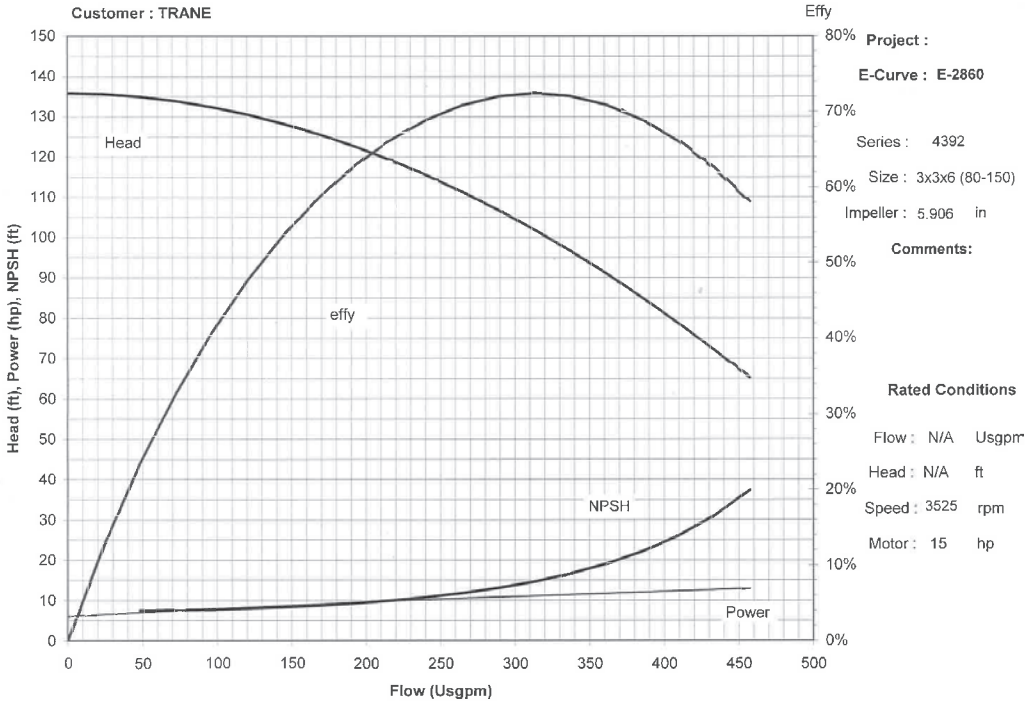

**Unit Component Pressure Drop:** Figure 50 shows the pressure drop values for unit components, including evaporator, strainer, piping and valves.

**Figure 50. Unit component pressure drop, water only**

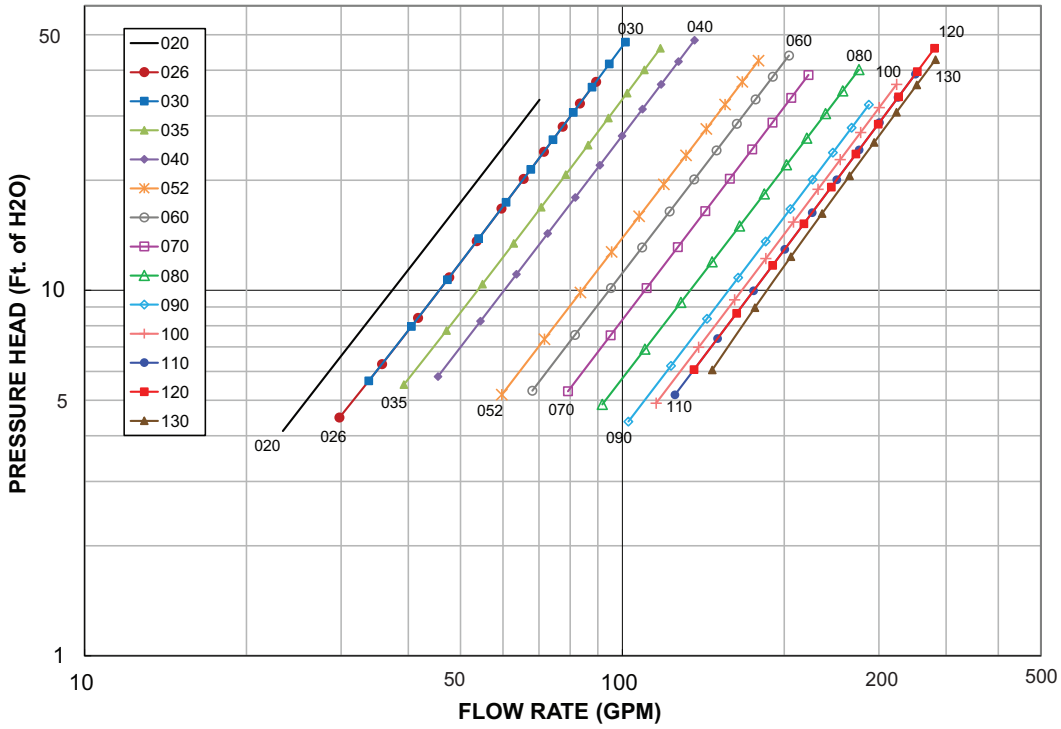


**System Head Pressure:** See Figure 51 for the system head pressure available.

***Note:*** *System Head Pressure = Pump Pressure - Component Pressure)*

**Figure 51. CGAM pump package available head pressure, water only**

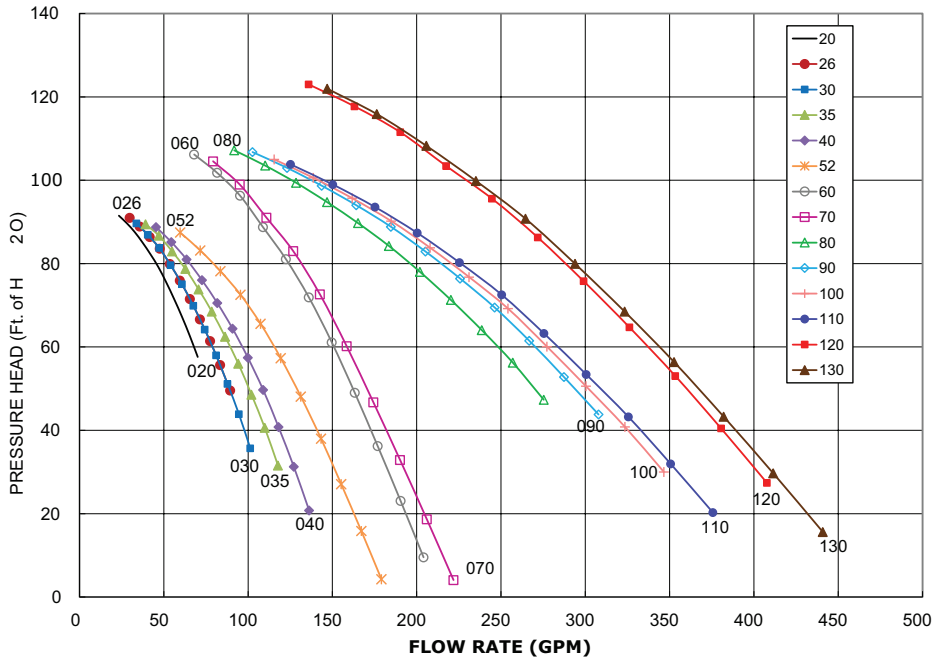

## Unit with Optional Pump Package Systems - Glycol

If using glycol in system, apply adjustment factors to pressure drops per the following formulas:

- Glycol Pump Head = Water Pump Head x Pump Adjustment Factor
- Glycol Component Pressure Drop = Components Pressure Drop x Component Adjustment Factor

***Note:***

- *For Water Pump Head, see Figure 46, p. 78 through Figure 49, p. 79*
- *For Component Pressure Drop, see Figure 50, p. 80*
- *For Pump and Component Adjustment Factors, see Table 54*

**Table 54. Brine adjustment factors**

| Percentage Glycol | Ethylene Glycol | | Propylene Glycol | |
|---|---|---|---|---|
| | Adjustment for | | Adjustment for | |
| | Pump | Components | Pump | Components |
| 5% | 1.004 | 1.085 | 1.004 | 1.165 |
| 10% | 1.009 | 1.120 | 1.009 | 1.200 |
| 15% | 1.015 | 1.155 | 1.015 | 1.235 |
| 20% | 1.021 | 1.190 | 1.021 | 1.270 |
| 25% | 1.028 | 1.235 | 1.028 | 1.300 |
| 30% | 1.034 | 1.280 | 1.034 | 1.330 |
| 35% | 1.040 | 1.345 | 1.040 | 1.365 |
| 40% | 1.046 | 1.410 | 1.046 | 1.400 |
| 45% | - | - | 1.051 | 1.460 |

## Pump Package Requirements

The following requirements must be met for proper operation of pump package:

- Maximum working pressure 150 psig
- Fluid type shown in Table 55

**Table 55. Working fluid**

| Fluid Type | Fluid Percent (of weight) |
|---|---|
| Water | 100% |
| Ethylene Glycol | 0-40% |
| Propylene Glycol | 0-45% |

- Customer pressure drop must not exceed pump package head pressures found in "General Information," p. 10.
- If buffer tank option is selected, customer water volume must not exceed the values in Table 56, p. 82 and Table 57, p. 83. User volume expansion capacity is defined as the additional expansion volume usable for the customer if the chiller is installed with pump package and buffer tank options.

## Expansion Tank - Maximum Loop Volume

Expansion tanks supplied as part of the pump package option will allow loop expansion due to ambient fluctuations for maximum loop volumes shown in Table 56 and Table 57, p. 83.

***Note:*** *Negative values indicate that a field-installed tank is required to cover the expansion due to ambient fluctuations of the fluid in the chiller.*

***Important:*** *Chilled waterside pressure relief valve is designed to open at 226 ft. If relief valve is opening at lower pressures, verify system has sufficient expansion tank volume for the water and/or glycol solution used.*

**Table 56. Maximum loop volume — gallons (external to the chiller)**

| | Maximum Ambient = 100°F | | | | | | | | | | Maximum Ambient = 115°F | | | | | | | | | |
|---|---|---|---|---|---|---|---|---|---|---|---|---|---|---|---|---|---|---|---|---|
| | | % Ethylene Glycol | | | | % Propylene Glycol | | | | | | % Ethylene Glycol | | | | % Propylene Glycol | | | | |
| **Size** | **Water** | **10** | **20** | **30** | **40** | **10** | **20** | **30** | **40** | **45** | **Water** | **10** | **20** | **30** | **40** | **10** | **20** | **30** | **40** | **45** |
| **Without Buffer Tank** | | | | | | | | | | | | | | | | | | | | |
| **020** | 479 | 433 | 296 | 199 | 148 | 292 | 198 | 139 | 108 | 98 | 317 | 293 | 216 | 155 | 120 | 222 | 155 | 112 | 87 | 80 |
| **026** | 479 | 433 | 296 | 199 | 148 | 292 | 198 | 139 | 108 | 98 | 317 | 293 | 216 | 155 | 120 | 222 | 155 | 112 | 87 | 80 |
| **030** | 479 | 433 | 296 | 199 | 148 | 292 | 198 | 139 | 108 | 98 | 317 | 293 | 216 | 155 | 120 | 222 | 155 | 112 | 87 | 80 |
| **035** | 479 | 433 | 296 | 199 | 148 | 292 | 198 | 139 | 108 | 98 | 317 | 293 | 216 | 155 | 120 | 222 | 155 | 112 | 87 | 80 |
| **040** | 474 | 428 | 291 | 194 | 143 | 286 | 193 | 134 | 102 | 93 | 312 | 287 | 211 | 150 | 114 | 216 | 149 | 106 | 82 | 75 |
| **052** | 474 | 428 | 291 | 194 | 143 | 286 | 193 | 134 | 102 | 93 | 312 | 287 | 211 | 150 | 114 | 216 | 149 | 106 | 82 | 75 |
| **060** | 474 | 428 | 291 | 194 | 143 | 286 | 193 | 134 | 102 | 93 | 312 | 287 | 211 | 150 | 114 | 216 | 149 | 106 | 82 | 75 |
| **070** | 474 | 428 | 291 | 194 | 143 | 286 | 193 | 134 | 102 | 93 | 312 | 287 | 211 | 150 | 114 | 216 | 149 | 106 | 82 | 75 |
| **080** | 626 | 565 | 383 | 253 | 185 | 377 | 252 | 174 | 131 | 119 | 411 | 378 | 276 | 194 | 147 | 283 | 194 | 136 | 104 | 95 |
| **090** | 626 | 565 | 383 | 253 | 185 | 377 | 252 | 174 | 131 | 119 | 411 | 378 | 276 | 194 | 147 | 283 | 194 | 136 | 104 | 95 |
| **100** | 626 | 565 | 383 | 253 | 185 | 377 | 252 | 174 | 131 | 119 | 411 | 378 | 276 | 194 | 147 | 283 | 194 | 136 | 104 | 95 |
| **110** | 626 | 565 | 383 | 253 | 185 | 377 | 252 | 174 | 131 | 119 | 411 | 378 | 276 | 194 | 147 | 283 | 194 | 136 | 104 | 95 |
| **120** | 626 | 565 | 383 | 253 | 185 | 377 | 252 | 174 | 131 | 119 | 411 | 378 | 276 | 194 | 147 | 283 | 194 | 136 | 104 | 95 |
| **130** | 626 | 565 | 383 | 253 | 185 | 377 | 252 | 174 | 131 | 119 | 411 | 378 | 276 | 194 | 147 | 283 | 194 | 136 | 104 | 95 |
| **With Buffer Tank** | | | | | | | | | | | | | | | | | | | | |
| **020** | 335 | 289 | 152 | 55 | 4 | 148 | 54 | -5 | -36 | -46 | 173 | 149 | 72 | 11 | -24 | 78 | 11 | -32 | -57 | -64 |
| **026** | 335 | 289 | 152 | 55 | 4 | 148 | 54 | -5 | -36 | -46 | 173 | 149 | 72 | 11 | -24 | 78 | 11 | -32 | -57 | -64 |
| **030** | 335 | 289 | 152 | 55 | 4 | 148 | 54 | -5 | -36 | -46 | 173 | 149 | 72 | 11 | -24 | 78 | 11 | -32 | -57 | -64 |
| **035** | 335 | 289 | 152 | 55 | 4 | 148 | 54 | -5 | -36 | -46 | 173 | 149 | 72 | 11 | -24 | 78 | 11 | -32 | -57 | -64 |
| **040** | 338 | 292 | 155 | 58 | 7 | 150 | 57 | -2 | -34 | -43 | 176 | 151 | 75 | 14 | -22 | 80 | 13 | -30 | -54 | -61 |
| **052** | 338 | 292 | 155 | 58 | 7 | 150 | 57 | -2 | -34 | -43 | 176 | 151 | 75 | 14 | -22 | 80 | 13 | -30 | -54 | -61 |
| **060** | 338 | 292 | 155 | 58 | 7 | 150 | 57 | -2 | -34 | -43 | 176 | 151 | 75 | 14 | -22 | 80 | 13 | -30 | -54 | -61 |
| **070** | 338 | 292 | 155 | 58 | 7 | 150 | 57 | -2 | -34 | -43 | 176 | 151 | 75 | 14 | -22 | 80 | 13 | -30 | -54 | -61 |
| **080** | 470 | 409 | 226 | 97 | 29 | 220 | 96 | 17 | -25 | -38 | 254 | 221 | 119 | 38 | -9 | 127 | 38 | -20 | -52 | -62 |
| **090** | 470 | 409 | 226 | 97 | 29 | 220 | 96 | 17 | -25 | -38 | 254 | 221 | 119 | 38 | -9 | 127 | 38 | -20 | -52 | -62 |
| **100** | 425 | 364 | 181 | 52 | -16 | 175 | 51 | -28 | -70 | -83 | 210 | 177 | 74 | -7 | -54 | 82 | -7 | -65 | -97 | -107 |
| **110** | 425 | 364 | 181 | 52 | -16 | 175 | 51 | -28 | -70 | -83 | 210 | 177 | 74 | -7 | -54 | 82 | -7 | -65 | -97 | -107 |
| **120** | 425 | 364 | 181 | 52 | -16 | 175 | 51 | -28 | -70 | -83 | 210 | 177 | 74 | -7 | -54 | 82 | -7 | -65 | -97 | -107 |
| **130** | 425 | 364 | 181 | 52 | -16 | 175 | 51 | -28 | -70 | -83 | 210 | 177 | 74 | -7 | -54 | 82 | -7 | -65 | -97 | -107 |

**Table 57. Maximum loop volume — liters (external to the chiller)**

| | Maximum Ambient = 100°F | | | | | | | | | | Maximum Ambient = 115°F | | | | | | | | | |
|---|---|---|---|---|---|---|---|---|---|---|---|---|---|---|---|---|---|---|---|---|
| | | % Ethylene Glycol | | | | % Propylene Glycol | | | | | | % Ethylene Glycol | | | | % Propylene Glycol | | | | |
| **Size** | **Water** | **10** | **20** | **30** | **40** | **10** | **20** | **30** | **40** | **45** | **Water** | **10** | **20** | **30** | **40** | **10** | **20** | **30** | **40** | **45** |
| **Without Buffer Tank** | | | | | | | | | | | | | | | | | | | | |
| **020** | 1813 | 1639 | 1121 | 754 | 561 | 1104 | 751 | 528 | 407 | 372 | 1201 | 1108 | 818 | 587 | 453 | 839 | 586 | 422 | 331 | 303 |
| **026** | 1813 | 1639 | 1121 | 754 | 561 | 1104 | 751 | 528 | 407 | 372 | 1201 | 1108 | 818 | 587 | 453 | 839 | 586 | 422 | 331 | 303 |
| **030** | 1813 | 1639 | 1121 | 754 | 561 | 1104 | 751 | 528 | 407 | 372 | 1201 | 1108 | 818 | 587 | 453 | 839 | 586 | 422 | 331 | 303 |
| **035** | 1813 | 1639 | 1121 | 754 | 561 | 1104 | 751 | 528 | 407 | 372 | 1201 | 1108 | 818 | 587 | 453 | 839 | 586 | 422 | 331 | 303 |
| **040** | 1793 | 1619 | 1101 | 734 | 541 | 1084 | 731 | 508 | 387 | 352 | 1181 | 1088 | 798 | 567 | 433 | 819 | 566 | 402 | 311 | 283 |
| **052** | 1793 | 1619 | 1101 | 734 | 541 | 1084 | 731 | 508 | 387 | 352 | 1181 | 1088 | 798 | 567 | 433 | 819 | 566 | 402 | 311 | 283 |
| **060** | 1793 | 1619 | 1101 | 734 | 541 | 1084 | 731 | 508 | 387 | 352 | 1181 | 1088 | 798 | 567 | 433 | 819 | 566 | 402 | 311 | 283 |
| **070** | 1793 | 1619 | 1101 | 734 | 541 | 1084 | 731 | 508 | 387 | 352 | 1181 | 1088 | 798 | 567 | 433 | 819 | 566 | 402 | 311 | 283 |
| **080** | 2370 | 2139 | 1448 | 958 | 701 | 1426 | 955 | 657 | 496 | 449 | 1555 | 1430 | 1044 | 736 | 558 | 1072 | 735 | 516 | 394 | 358 |
| **090** | 2370 | 2139 | 1448 | 958 | 701 | 1426 | 955 | 657 | 496 | 449 | 1555 | 1430 | 1044 | 736 | 558 | 1072 | 735 | 516 | 394 | 358 |
| **100** | 2370 | 2139 | 1448 | 958 | 701 | 1426 | 955 | 657 | 496 | 449 | 1555 | 1430 | 1044 | 736 | 558 | 1072 | 735 | 516 | 394 | 358 |
| **110** | 2370 | 2139 | 1448 | 958 | 701 | 1426 | 955 | 657 | 496 | 449 | 1555 | 1430 | 1044 | 736 | 558 | 1072 | 735 | 516 | 394 | 358 |
| **120** | 2370 | 2139 | 1448 | 958 | 701 | 1426 | 955 | 657 | 496 | 449 | 1555 | 1430 | 1044 | 736 | 558 | 1072 | 735 | 516 | 394 | 358 |
| **130** | 2370 | 2139 | 1448 | 958 | 701 | 1426 | 955 | 657 | 496 | 449 | 1555 | 1430 | 1044 | 736 | 558 | 1072 | 735 | 516 | 394 | 358 |
| **With Buffer Tank** | | | | | | | | | | | | | | | | | | | | |
| **020** | 1268 | 1094 | 576 | 209 | 16 | 559 | 206 | -17 | -138 | -173 | 656 | 563 | 273 | 42 | -92 | 294 | 41 | -123 | -214 | -242 |
| **026** | 1268 | 1094 | 576 | 209 | 16 | 559 | 206 | -17 | -138 | -173 | 656 | 563 | 273 | 42 | -92 | 294 | 41 | -123 | -214 | -242 |
| **030** | 1268 | 1094 | 576 | 209 | 16 | 559 | 206 | -17 | -138 | -173 | 656 | 563 | 273 | 42 | -92 | 294 | 41 | -123 | -214 | -242 |
| **035** | 1268 | 1094 | 576 | 209 | 16 | 559 | 206 | -17 | -138 | -173 | 656 | 563 | 273 | 42 | -92 | 294 | 41 | -123 | -214 | -242 |
| **040** | 1278 | 1104 | 586 | 219 | 26 | 569 | 216 | -7 | -128 | -163 | 666 | 573 | 283 | 52 | -82 | 304 | 51 | -113 | -204 | -232 |
| **052** | 1278 | 1104 | 586 | 219 | 26 | 569 | 216 | -7 | -128 | -163 | 666 | 573 | 283 | 52 | -82 | 304 | 51 | -113 | -204 | -232 |
| **060** | 1278 | 1104 | 586 | 219 | 26 | 569 | 216 | -7 | -128 | -163 | 666 | 573 | 283 | 52 | -82 | 304 | 51 | -113 | -204 | -232 |
| **070** | 1278 | 1104 | 586 | 219 | 26 | 569 | 216 | -7 | -128 | -163 | 666 | 573 | 283 | 52 | -82 | 304 | 51 | -113 | -204 | -232 |
| **080** | 1778 | 1547 | 856 | 366 | 109 | 834 | 363 | 65 | -96 | -143 | 963 | 838 | 452 | 144 | -34 | 480 | 143 | -76 | -198 | -234 |
| **090** | 1778 | 1547 | 856 | 366 | 109 | 834 | 363 | 65 | -96 | -143 | 963 | 838 | 452 | 144 | -34 | 480 | 143 | -76 | -198 | -234 |
| **100** | 1608 | 1377 | 686 | 196 | -61 | 664 | 193 | -105 | -266 | -313 | 793 | 668 | 282 | -26 | -204 | 310 | -27 | -246 | -368 | -404 |
| **110** | 1608 | 1377 | 686 | 196 | -61 | 664 | 193 | -105 | -266 | -313 | 793 | 668 | 282 | -26 | -204 | 310 | -27 | -246 | -368 | -404 |
| **120** | 1608 | 1377 | 686 | 196 | -61 | 664 | 193 | -105 | -266 | -313 | 793 | 668 | 282 | -26 | -204 | 310 | -27 | -246 | -368 | -404 |
| **130** | 1608 | 1377 | 686 | 196 | -61 | 664 | 193 | -105 | -266 | -313 | 793 | 668 | 282 | -26 | -204 | 310 | -27 | -246 | -368 | -404 |

# Installation - Electrical

## General Recommendations

As you review this manual, keep in mind that:

- All field-installed wiring must conform to National Electric Code (NEC) guidelines, and any applicable state and local codes. Be sure to satisfy proper equipment grounding requirements per NEC.
- Compressor motor and unit electrical data is listed on the chiller nameplate.
- All field-installed wiring must be checked for proper terminations, and for possible shorts or grounds.

***Note:*** *Always refer to wiring diagrams shipped with chiller or unit submittal for specific electrical schematic and connection information.*

**⚠WARNING**

### Hazardous Voltage — Pressurized Burning Fluid!

**Failure to follow all electrical safety precautions could result in death or serious injury.**

**Compressors on 110 and 120 ton, extra efficiency units, have strong permanent magnet motors that have the capability to generate voltage during situations when the refrigerant charge is being migrated. This potential will be present at the motor terminals and at the load side of compressor contactors.**

**Before removing compressor terminal box cover for servicing, or servicing power side of control panel, CLOSE COMPRESSOR DISCHARGE SERVICE VALVE and disconnect all electric power including remote disconnects. Follow lockout/tagout procedures to ensure the power cannot be inadvertently energized.**

**The compressor contains hot, pressurized refrigerant. Motor terminals act as a seal against this refrigerant. Care should be taken when servicing NOT to damage or loosen motor terminals.**

**Do not operate compressor without terminal box cover in place.**

**⚠WARNING**

### Hazardous Voltage!

**Disconnect all electric power, including remote disconnects before servicing. Follow proper lockout/tagout procedures to ensure the power can not be inadvertently energized. Failure to disconnect power before servicing could result in death or serious injury.**

**⚠WARNING**

### Proper Field Wiring and Grounding Required!

**Failure to follow code could result in death or serious injury. All field wiring MUST be performed by qualified personnel. Improperly installed and grounded field wiring poses FIRE and ELECTROCUTION hazards. To avoid these hazards, you MUST follow requirements for field wiring installation and grounding as described in NEC and your local/state electrical codes.**

***NOTICE:***

### Use Copper Conductors Only!

**Failure to use copper conductors could result in equipment damage as the equipment was not designed or qualified to accept other types of conductors.**

***NOTICE:***

### Equipment Damage!

**Do not allow conduit to interfere with other components, structural members or equipment. Control voltage (115V) wiring in conduit must be separate from conduit carrying low voltage (<30V) wiring. To prevent control malfunctions, do not run low voltage wiring (<30V) in conduit with conductors carrying more than 30 volts.**

## Installer-Supplied Components

Customer wiring interface connections are shown in the electrical schematics and connection diagrams that are shipped with the unit. The installer must provide the following components if not ordered with the unit:

- Power supply wiring (in conduit) for all field-wired connections.
- All control (interconnecting) wiring (in conduit) for field supplied devices.
- Circuit breakers.

## Power Supply Wiring

**⚠WARNING**

**Proper Field Wiring and Grounding Required!**

**Failure to follow code could result in death or serious injury. All field wiring MUST be performed by qualified personnel. Improperly installed and grounded field wiring poses FIRE and ELECTROCUTION hazards. To avoid these hazards, you MUST follow requirements for field wiring installation and grounding as described in NEC and your local/state electrical codes.**

All power supply wiring must be sized and selected accordingly by the project engineer in accordance with NEC Table 310-16.

**⚠WARNING**

**Hazardous Voltage!**

**Failure to disconnect power before servicing could result in death or serious injury. Disconnect all electric power, including remote disconnects before servicing. Follow proper lockout/tagout procedures to ensure the power can not be inadvertently energized.**

All wiring must comply with local codes and the National Electrical Code. The installing (or electrical) contractor must provide and install the system interconnecting wiring, as well as the power supply wiring. It must be properly sized and equipped with the appropriate fused disconnect switches.

The type and installation location(s) of the fused disconnects must comply with all applicable codes.

***NOTICE:***

**Use Copper Conductors Only!**

**Failure to use copper conductors could result in equipment damage as the equipment was not designed or qualified to accept other types of conductors.**

Knock-outs for wiring are located on the bottom right side of the control panel.The wiring is passed through these conduits and connected to the terminal blocks or HACR type breakers. See Figure 58, p. 86.

To provide proper phasing of 3-phase input, make connections as shown in field wiring diagrams and as stated on the WARNING label in the starter panel. Proper equipment ground must be provided to each ground connection in the panel (one for each customer-supplied conductor per phase).

The high voltage field-provided connections are made through knockouts on the right side of the panel. The low voltage connections are made through the left side of the panel (Figure 58). Additional grounds may be required for each 115 volt power supply to the unit. Green lugs are provided for 115V customer wiring.

## Control Power Supply

The unit is equipped with a control power transformer; it is not necessary to provide additional control power voltage to the unit. No other loads should be connected to the control power transformer.

All units are factory-connected for appropriate labeled voltages.

***NOTICE:***

**Equipment Damage!**

**Failure to follow instructions could cause catastrophic damage to the evaporator or partial heat recovery heat exchanger.**
**Control panel main processor does not check for loss of power to the heat tape nor does it verify thermostat operation. A qualified technician must verify power to the heat tape and confirm operation of the heat tape thermostat.**

## Heater Power Supply

For units with freeze protection selected (model number digit 18 is “1”), the evaporator shell is insulated from ambient air and protected from freezing temperatures by a thermostatically-controlled immersion heaters. When the ambient temperature drops to approximately 37°F (2.8°C) the thermostat energizes the heaters. The heaters will provide protection from ambient temperatures down to -20°F (-29°C).

It is required to provide an independent power source (115V 60-Hz-20 amp, 50Hz-15 amp), with a fused-disconnect to the heaters. The heaters are factory-wired back to the unit control panel.

***Note:*** *If evaporator is drained, the heaters must be turned off to avoid damage to the to the heaters or heating elements. Damaged heaters could cause risk of evaporator damage once it is back in operation. The heater should only be on when the evaporator has water (or other solution) in it.*

**Table 58. Power entrance**

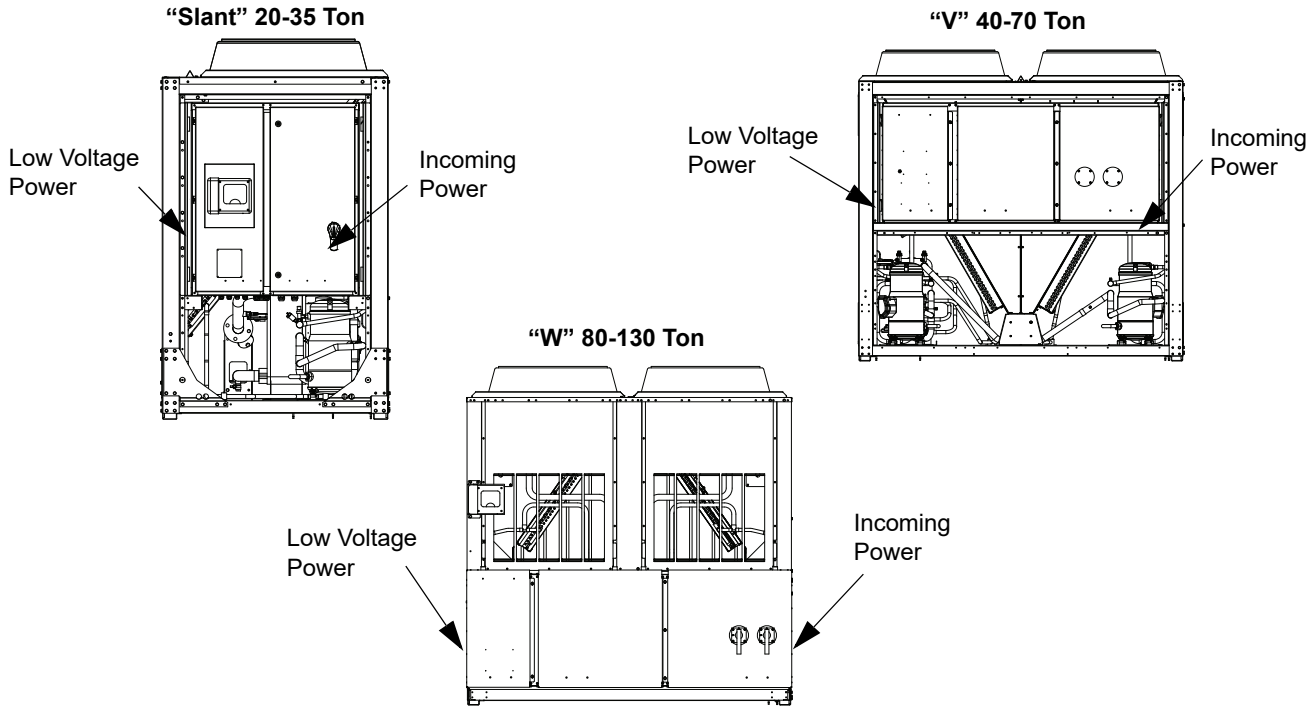


## Partial Heat Recovery Power Supply

The partial heat recover heat exchanger is insulated from ambient air and protected from freezing temperatures by an immersion heater. When the ambient air temperature drops to approximately 37°F (2.8°C) the thermostat energizes the heaters. The heaters will provide protection from ambient temperatures down to -20°F (-29°C).

It is required to provide an independent power source (115V 60-Hz-20 amp, 50Hz-15 amp), with a fused-disconnect to the heater. The heaters are factory-wired back to the unit control panel.

***Note:*** *If partial heat recovery heat exchanger is drained, the heater must be turned off in order to avoid damaging the partial heat recovery heat exchanger. The heater should only be on when the heat recovery heat exchanger has water in it.*

## Water Pump Power Supply

For units without the optional pump package, provide power supply wiring with disconnect for the chilled water pump(s).

For units with the optional pump package, power is provided through a separate factory-wired control panel, integrated into the chiller unit power.

# Interconnecting Wiring

## Chilled Water Flow (Pump) Interlock

All CGAM model chillers have a factory-installed flow switch. In addition, it is recommended to use an additional field-supplied control voltage contact input through an auxiliary contact to prove flow. Connect the auxiliary contact to 1X5-3 and 1X5-9. Refer to the field wiring for details. The auxiliary contact can be a BAS signal, starter contactor auxiliary or any signal which indicates the pump is running.

## Chilled Water Pump Control

An evaporator water pump output relay closes when the chiller is given a signal to go into the Auto mode of operation from any source. The contact is opened to turn off the pump in the event of most machine level diagnostics to prevent the build up of pump heat.

The relay output from 1A9 is required to operate the Evaporator Water Pump (EWP) contactor. Contacts should be compatible with 115/240 Vac control circuit. Normally, the EWP relay follows the AUTO mode of the chiller. Whenever the chiller has no diagnostics and is in the AUTO mode, regardless of where the auto command is coming from, the normally open relay is energized. When the chiller exits the AUTO mode, the relay is timed to open in an adjustable (using TechView™) 0 to 30 minutes. The non-AUTO modes in which the pump is stopped, include Reset, Stop, External Stop, Remote Display

Stop, Stopped by Tracer®, Start Inhibited by Low Ambient Temp, and Ice Building complete.

**NOTICE:**

**Equipment Damage!**

**If the microprocessor calls for a pump to start and water does not flow, the evaporator may be damaged catastrophically. It is the responsibility of the installing contractor and/or the customer to ensure that a pump will always be running when called upon by the chiller controls.**

**Table 59. Pump relay operation**

| Chiller Mode | Relay Operation |
|---|---|
| Auto | Instant close |
| Ice Building | Instant close |
| Tracer® Override | Close |
| Stop | Timed to Open |
| Ice Complete | Instant Open |
| Diagnostics | Instant Open |

When going from Stop to Auto, the EWP relay is energized immediately. If evaporator water flow is not established in 4 minutes and 15 seconds, the CH530 de-energizes the EWP relay and generates a non-latching diagnostic. If flow returns (e.g. someone else is controlling the pump), the diagnostic is cleared, the EWP relay is re-energized, and normal control resumed.

If evaporator water flow is lost once it has been established, the EWP relay remains energized and a non-latching diagnostic is generated. If flow returns, the diagnostic is cleared and the chiller returns to normal operation.

**NOTICE:**

**Equipment Damage!**

**Do NOT enable/disable the chiller by removing water flow or equipment damage can occur.**

In general, when there is either a non-latching or latching diagnostic, the EWP relay is turned off as though there was a zero time delay. The relay continues to be energized with:

A Low Chilled Water Temperature diagnostic (non-latching) unless also accompanied by an Evap Leaving Water Temperature Sensor Diagnostic.

or

A Loss of Evaporator Water Flow diagnostic (non-latching) and the unit is in the AUTO mode, after initially having proven evaporator water flow.

***Note:*** *If pump control is used for freeze protection then the pump MUST be controlled by the CGAM CH530 control. If another method of freeze protection is used (i.e. glycol, heaters, purge, etc) then the pump may be controlled by another system.*

## Chilled Water Pump Control — Field Supplied Dual Pumps

If the unit is configured for dual pump, fixed-speed operations (two CH530-controlled pumps), CH530 provides two normally-open relay outputs (1A9), one for each pump, to command pump operation via a contactor. The control alternates pump operation for each new request for water flow. Restart during the pump off delay does not cause pump switch.

If evaporator water pump fault inputs are installed/used (1A12), CH530 provides two low-voltage binary fault inputs, one for each pump. A pump fault causes the respective pump relay to de-energize. A pump fault causes a “fault detected: evap pump X” diagnostic and an automatic, immediate switch to the idle pump if the idle pump does not already have an active pump fault diagnostic. If both pumps have an active pump fault diagnostic, unit operation will be prevented by a run inhibit. The run inhibit will be removed if either pump’s fault diagnostic clears. A “no evap water pumps available” submode is displayed when the run inhibit is active.

In this situation, the unit will leave the factory with Evaporator Pump Control (EVPC) = No Pump Control (Pump Request Relay) (NPMP) and Evaporator Pump Fault Input (EVFI) = Installed (INST).When the contactors and pumps are set up in the field, the CH530 Service Tool (TechView™) must be used to reconfigure to Evaporator Pump Control = Dual Pump Fixed Speed and Evaporator Pump Fault Input = Not Installed or Installed depending on how the fault feedback wire is connected. It is strongly recommended to install the Fault Input if possible as the controls will “hot-swap” the pumps upon detection of a fault, and may avoid the inevitable Flow Loss diagnostic (and unit shutdown) that will result if there is no fault feedback.

When configured for Dual Pump Fixed Speed, the CH530 will swap pumps on detection of a fault (if installed), or when a flow loss or overdue event occurs. It will also switch pumps each time the overall pump request is removed and re-engaged, unless a fault is detected on one of the pumps. If faults are detected on both pumps, the unit will be shut down.

In addition to the factory installed flow switch, a field-supplied auxiliary contact is required, so that the chiller will only detect flow if a pump is running and the flow switch says flow is present.

## Chilled Water Pump Control — Optional Pump Package

When factory installed pump package option is selected, the chiller MUST control the pumps. See “Chilled Water Pump Control,” p. 86.

## Alarm and Status Relay Outputs (Programmable Relays)

A programmable relay concept provides for enunciation of certain events or states of the chiller, selected from a list of likely needs, while only using four physical output relays, as shown in the field wiring diagram. The four relays are provided (generally with a Quad Relay Output LLID) as part of the Alarm Relay Output Option. The relay’s contacts are isolated Form C (SPDT), suitable for use with 120 Vac circuits drawing up to 2.8 amps inductive, 7.2 amps resistive, or 1/3 HP and for 240 Vac circuits drawing up to 0.5 amp resistive.

The list of events/states that can be assigned to the programmable relays can be found in Table 60. The relay will be energized when the event/state occurs.

**Table 60. Alarm and status relay output configuration**

| | Description |
|---|---|
| Alarm - Latching | This output is true whenever there is any active diagnostic that requires a manual reset to clear, that affects either the Chiller, the Circuit, or any of the Compressors on a circuit. This classification does not include informational diagnostics. |
| Alarm - Auto Reset | This output is true whenever there is any active diagnostic that could automatically clear, that affects either the Chiller, the Circuit, or any of the Compressors on a circuit. This classification does not include informational diagnostics. |
| Alarm | This output is true whenever there is any diagnostic affecting any component, whether latching or automatically clearing. This classification does not include informational diagnostics |
| Alarm Ckt 1 | This output is true whenever there is any diagnostic effecting Refrigerant Circuit 1, whether latching or automatically clearing, including diagnostics affecting the entire chiller. This classification does not include informational diagnostics. |
| Alarm Ckt 2 | This output is true whenever there is any diagnostic affecting Refrigerant Circuit 2 whether latching or automatically clearing, including diagnostics effecting the entire chiller. This classification does not include informational diagnostics. |
| Chiller Limit Mode (with a 20 minute filter) | This output is true whenever the chiller has been running in one of the Unloading types of limit modes (Condenser, Evaporator, Current Limit or Phase Imbalance Limit) continuously for the last 20 minutes. |
| Circuit 1 Running | This output is true whenever any compressor is running (or commanded to be running) on Refrigerant Circuit 1, and false when no compressors are commanded to be running on that circuit. |
| Circuit 2 Running | This output is true whenever any compressor is running (or commanded to be running) on Refrigerant Circuit 2, and false when no compressors are commanded to be running on that circuit. |
| Chiller Running | This output is true whenever any compressor is running (or commanded to be running) on the chiller and false when no compressors are commanded to be running on the chiller. |
| Maximum Capacity | This output is true whenever the chiller has all compressors on. The output is false once one compressor is shut off. |

### Relay Assignments Using TechView

CH530 Service Tool (TechView™) is used to install the Alarm and Status Relay Option package and assign any of the above list of events or status to each of the four relays provided with the option. The relays to be programmed are referred to by the relay’s terminal numbers on the LLID board 1A18.

The default assignments for the four available relays of the CGAM Alarm and Status Package Option are:

**Table 61. Default relay assignments**

| Relay | |
|---|---|
| Relay 1 Terminals J2 -12,11,10: | Compressor Running |
| Relay 2 Terminals J2 - 9,8,7: | Latching Alarm |
| Relay 3 Terminals J2-6,5,4: | Chiller Limit Mode |
| Relay 4 Terminals J2-3,2,1: | Warning |

If any of the Alarm/Status relays are used, provide electrical power, 115 Vac with fused-disconnect to the panel and wire through the appropriate relays (terminals on 1A13. Provide wiring (switched hot, neutral, and ground connections) to the remote annunciation devices. Do not use power from the chiller’s control panel transformer to power these remote devices. Refer to the field diagrams which are shipped with the unit.

## Low Voltage Wiring

**⚠WARNING**

**Proper Field Wiring and Grounding Required!**

**Failure to follow code could result in death or serious injury. All field wiring MUST be performed by qualified personnel. Improperly installed and grounded field wiring poses FIRE and ELECTROCUTION hazards. To avoid these hazards, you MUST follow requirements for field wiring installation and grounding as described in NEC and your local/state electrical codes.**

The remote devices described below require low voltage wiring. All wiring to and from these remote input devices to the Control Panel must be made with shielded, twisted pair conductors. Be sure to ground the shielding only at the panel.

***Note:*** *To prevent control malfunctions, do not run low voltage wiring (<30 V) in conduit with conductors carrying more than 30 volts.*

## Emergency Stop

CH530 provides auxiliary control for a customer specified/ installed latching trip out. When this customer-furnished remote contact 6K5 is provided, the chiller will run normally when the contact is closed. When the contact opens, the unit will trip on a manually resettable diagnostic. This condition requires manual reset at the chiller switch on the front of the control panel.

Connect low voltage leads to terminal strip locations on 1A13, J2-3 and 4. Refer to the field diagrams that are shipped with the unit.

Silver or gold-plated contacts are recommended. These customer-furnished contacts must be compatible with 24 Vdc, 12 mA resistive load.

## External Auto/Stop

If the unit requires the external Auto/Stop function, the installer must provide leads from the remote contact 6K4 to the proper terminals on 1A13, J2-1 and 2.

The chiller will run normally when the contact is closed. When the contact opens, the compressor(s), if operating, will go to the RUN:UNLOAD operating mode and cycle off. Unit operation will be inhibited. Closure of the contact will permit the unit to return to normal operation.

Field-supplied contacts for all low voltage connections must be compatible with dry circuit 24 Vdc for a 12 mA resistive load. See the field diagrams that are shipped with the unit.

***NOTICE:***

**Equipment Damage!**

**Do NOT enable/disable the chiller by removing water flow or equipment damage can occur.**

## Ice Building Option

CH530 provides auxiliary control for a customer specified/ installed contact closure for ice building if so configured and enabled. This output is known as the Ice Building Status Relay. The normally open contact will be closed when ice building is in progress and open when ice building has been normally terminated either through Ice Termination setpoint being reached or removal of the Ice Building command. When contact 6K6 is provided, the chiller will run normally when the contact is open.

CH530 will accept either an isolated contact closure (External Ice Building command) or a Remote Communicated input (Tracer®) to initiate and command the Ice Building mode.

CH530 also provides a “Front Panel Ice Termination Setpoint”, settable through TechView™, and adjustable from 20 to 31°F (-6.7 to -0.5°C) in at least 1°F (1°C) increments.

When in the Ice Building mode, and the evaporator entering water temperature drops below the ice termination setpoint, the chiller terminates the Ice Building mode and changes to the Ice Building Complete Mode.

***NOTICE:***

**Evaporator Damage!**

**Freeze inhibitor must be adequate for the leaving water temperature. Failure to do so could result in damage to system components.**

TechView™ may also be used to enable or disable Ice Machine Control. This setting does not prevent the Tracer® from commanding Ice Building mode.

Upon contact closure, the CH530 will initiate an ice building mode, in which the unit runs fully loaded at all times. Ice building shall be terminated either by opening the contact or based on the entering evaporator water temperature. CH530 will not permit the ice building mode to be reentered until the unit has been switched out of ice building mode (open 5K20 contacts) and then switched back into ice building mode (close 5K20 contacts.)

In ice building, all limits (freeze avoidance, evaporator, condenser, current) will be ignored. All safeties will be enforced.

If, while in ice building mode, the unit gets down to the freeze stat setting (water or refrigerant), the unit will shut down on a manually resettable diagnostic, just as in normal operation.

Connect leads from 6K6 to the proper terminals of 1A16. Refer to the field diagrams which are shipped with the unit.

Silver or gold-plated contacts are recommended. These customer furnished contacts must be compatible with 24 Vdc, 12 mA resistive load.

## External Chilled Water Setpoint (ECWS) Option

The CH530 provides inputs that accept either 4-20 mA or 2-10 Vdc signals to set the external chilled water setpoint (ECWS). **This is not a reset function.** The input defines the set point. This input is primarily used with generic BAS (building automation systems). The chilled water setpoint set via the DynaView™ or through digital communication with Tracer®.

The chilled water setpoint may be changed from a remote location by sending either a 2-10 Vdc or 4-20 mA signal to the 1A14, J2-1 and 2. The 2-10 Vdc and 4-20 mA each correspond to a 10 to 65°F (-12 to 18°C) external chilled water setpoint.

The following equations apply:

**Voltage Signal**

Vdc =
$(8*ECWS_{°F} + 2*ECWS_{max} - 10*ECWS_{min})/(ECWS_{max} - ECWS_{min})$

**Current Signal**

mA =
$(16*ECWS_{°F} + 4*ECWS_{max} - 20*ECWS_{min})/ (ECWS_{max} - ECWS_{min})$

***Note:*** *To convert ECWS values to °F, use the following formula: °F = 1.8*(°C) + 32*

If the ECWS input develops an open or short, the LLID will report either a very high or very low value back to the main processor. This will generate an informational diagnostic and the unit will default to using the Front Panel (DynaView™) Chilled Water Setpoint.

TechView™ Service Tool is used to set the input signal type from the factory default of 2-10 Vdc to that of 4-20 mA. TechView™ is also used to install or remove the External Chilled Water Setpoint option as well as a means to enable and disable ECWS.

## External Demand Limit Setpoint (EDLS) Option

CH530 provide a means to limit the capacity of the chiller by limiting the number of compressors or stages that are allowed to run. The maximum number of compressor or stages allowed to run can vary from one to the number of stages on the unit. The staging algorithm is free to decide which compressor or stage shall be turned off or prevented from running to meet this requirement.

CH530 shall accept either a 2-10 Vdc or 4-20 mA analog input suitable for customer connection to set the unit external demand limit setpoint (EDLS).

2-10 Vdc and 4-20 mA shall each correspond to an EDLS range with a minimum of 0% and a maximum of 100%. The following equations exist.

| | Voltage Signal | Current Signal |
|---|---|---|
| As generated from external source | Vdc = 8*(EDLS) + 2 | mA = 16*(EDLS) + 4 |
| As processed by CH530 | EDLS = (Vdc - 2)/8 | EDLS = (mA - 4)/16 |

The minimum EDLS will be clamped at the front panel based on 100% / Total number of Compressors. For input signals beyond the 2-10 Vdc or 4-20 mA range, the end of range value shall be used. For example, if the customer inputs 21 mA, the EDLS shall limit it self to the corresponding 20 mA EDLS.

## ECWS and EDLS Analog Input Signal Wiring Details

Both the ESWS and EDLS can be connected and setup as either a 2-10 Vdc (factory default), 4-20 mA, or resistance input (also a form of 4-20 mA) as indicated below. Depending on the type to be used, the TechView™ Service Tool must be used to configure the LLID and the MP for the proper input type that is being used. This is accomplished by a setting change on the Custom Tab of the Configuration View within TechView™.

The J2-3 and J2-6 terminal is chassis grounded and terminal J2-1 and J2-4 can be used to source 12 Vdc. The ECLS uses terminals J2-2 and J2-3. EDLS uses terminals J2-5 and J2-6. Both inputs are only compatible with high-side current sources.

**Figure 52. Wiring examples for ECLS and EDLS**

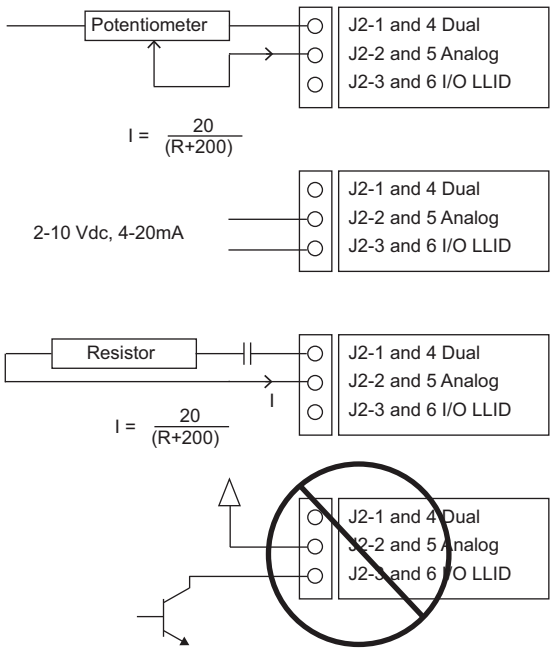


## Chilled Water Reset (CWR)

CH530 resets the chilled water temperature set point based on either return water temperature, or outdoor air temperature.

The following shall be selectable:

- One of three Reset Types: None, Return Water Temperature Reset, Outdoor Air Temperature Reset, or Constant Return Water Temperature Reset.
- Reset Ratio Set Points.
- For outdoor air temperature reset there shall be both positive and negative reset ratio's.
- Start Reset Set Points.
- Maximum Reset Set Points.

The equations for each type of reset are as follows:

**Return**

CWS' = CWS + RATIO (START RESET - (TWE - TWL))

and CWS' > or = CWS

and CWS' - CWS < or = Maximum Reset

**Outdoor**

CWS' = CWS + RATIO * (START RESET - TOD)

and CWS' > or = CWS

and CWS' - CWS < or = Maximum Reset

**where**

CWS' is the new chilled water set point or the “reset CWS”

CWS is the active chilled water set point before any reset has occurred, e.g. normally Front Panel, Tracer®, or ECWS

RESET RATIO is a user adjustable gain

START RESET is a user adjustable reference

TOD is the outdoor temperature

TWE is entering evap. water temperature

TWL is leaving evap. water temperature

MAXIMUM RESET is a user adjustable limit providing the maximum amount of reset. For all types of reset, CWS' - CWS < or = Maximum Reset.

| Reset Type | Reset Ratio Range | Start Reset Range | Maximum Reset Range | Increment | | Factory Default Value |
|---|---|---|---|---|---|---|
| | | | | IP | SI | |
| Return | 10-120% | 4-30°F (2.2-16.7°C) | 0-20°F (0.0-11.1°C) | 1% | 1% | 50% |
| Outdoor | 80--80% | 50 - 130°F (10-54.4°C) | 0 - 20°F (0.0-11.1°C) | 1% | 1% | 10% |

In addition to Return and Outdoor Reset, the MP provides a menu item for the operator to select a Constant Return Reset. Constant Return Reset will reset the leaving water temperature set point so as to provide a constant entering water temperature. The Constant Return Reset equation is the same as the Return Reset equation except on selection of Constant Return Reset, the MP will automatically set Ratio, Start Reset, and Maximum Reset to the following.

RATIO = 100%

START RESET = Design Delta Temp.

MAXIMUM RESET = Design Delta Temp.

The equation for Constant Return is then as follows:

CWS' = CWS + 100% (Design Delta Temp. - (TWE - TWL))

and CWS' > or = CWS

and CWS' - CWS < or = Maximum Reset

When any type of CWR is enabled, the MP will step the Active CWS toward the desired CWS' (based on the above equations and setup parameters) at a rate of 1 degree F every 5 minutes until the Active CWS equals the desired CWS'. This applies when the chiller is running.

When the chiller is not running the CWS is reset immediately (within one minute) for Return Reset and at a rate of 1 degree F every 5 minutes for Outdoor Reset. The chiller will start at the Differential to Start value above a fully reset CWS or CWS' for both Return and Outdoor Reset.

## Percent Capacity Output Option

CH530 provides an optional percent capacity output for those customers without a communicating BAS interface. The active unit capacity (AUC) is provided through a 2-10 Vdc analog output at 1A25 terminals J2-4 and J2-6 (GND). The active unit capacity value (in%) can be derived from the 2-10 Vdc output voltage (OV) using the following calculation:

AUC = 100*(OV - 2.0V)/(10.0V - 2.0V)

***Note:*** *The percent capacity output is based on the number and size of compressors energized, and is not adjusted for operating conditions. This value cannot be used as an accurate measure of total unit current, power or cooling capacity.*

# Communications Interface Options

## Tracer Communications Interface

This option allows the Tracer® CH530 controller to exchange information (e.g. operating setpoints and Auto/Standby commands) with a higher-level control device, such as a Tracer® Summit or a multiple-machine controller. A shielded, twisted pair connection establishes the bi-directional communications link between the Tracer® CH530 and the building automation system.

***Note:*** *To prevent control malfunctions, do not run low voltage wiring (<30 V) in conduit with conductors carrying more than 30 volts.*

**⚠WARNING**

**Proper Field Wiring and Grounding Required!**

**Failure to follow code could result in death or serious injury. All field wiring MUST be performed by qualified personnel. Improperly installed and grounded field wiring poses FIRE and ELECTROCUTION hazards. To avoid these hazards, you MUST follow requirements for field wiring installation and grounding as described in NEC and your local/state electrical codes.**

Field wiring for the communication link must meet the following requirements:

- All wiring must be in accordance with the NEC and local codes.
- Communication link wiring must be shielded, twisted pair wiring (Belden 8760 or equivalent). See the table below for wire size selection:

**Table 62. Wire size**

| Wire Size | Maximum Length of Communication Wire |
|---|---|
| 14 AWG (2.5 $mm^2$) | 5,000 FT (1525 m) |
| 16 AWG (1.5 $mm^2$) | 2,000 FT (610 m) |
| 18 AWG (1.0 $mm^2$) | 1,000 FT (305 m) |

- The communication link cannot pass between buildings.
- All units on the communication link can be connected in a “daisy chain” configuration.

## LonTalk Communications Interface for Chillers (LCI-C)

CH530 provides an optional LonTalk® Communication Interface (LCI-C) between the chiller and a Building Automation System (BAS). An LCI-C LLID shall be used to provide “gateway”. functionality between a LonTalk® compatible device and the Chiller. The inputs/outputs include both mandatory and optional network variables as established by the LonTalk® Functional Chiller Profile 8040.

***Note:*** *For more information, see ACC-SVN25*-EN.*

## BACnet Interface (BCI-C)

Optional BACnet® Communication Interface for Chillers (BCI-C) is comprised of a Symbio™ BCI2-C module with interface software. It is a non-programmable communications module that allows units to communicate on a BACnet® communications network.

***Note:*** *For more information, see BAS-SVP055*-EN.*

# CGAM Operating Principles

This section contains an overview of the operation of CGAM air-cooled liquid chiller equipped with microcomputer-based control systems. It describes the overall operating principles of the CGAM water chiller.

***Note:*** *To ensure proper diagnosis and repair, contact a qualified service organization if a problem should occur.*

## General

The Model CGAM units are scroll compressor air-cooled liquid chillers. These units are equipped with unit-mounted starter/control panels and operates with R-410A refrigerant.

The basic components of an CGAM unit are:

- Unit-mounted panel containing starter and Tracer CH530 controller and Input/Output LLIDS
- Scroll compressors
- Brazed plate evaporator
- Air-cooled condenser with subcooler
- Electronic expansion valve
- Optional partial heat recovery
- Related interconnecting piping.

Components of a typical CGAM unit are identified in the following diagrams.

## Base Units

**Figure 53. Slant 20 to 35 ton component location**

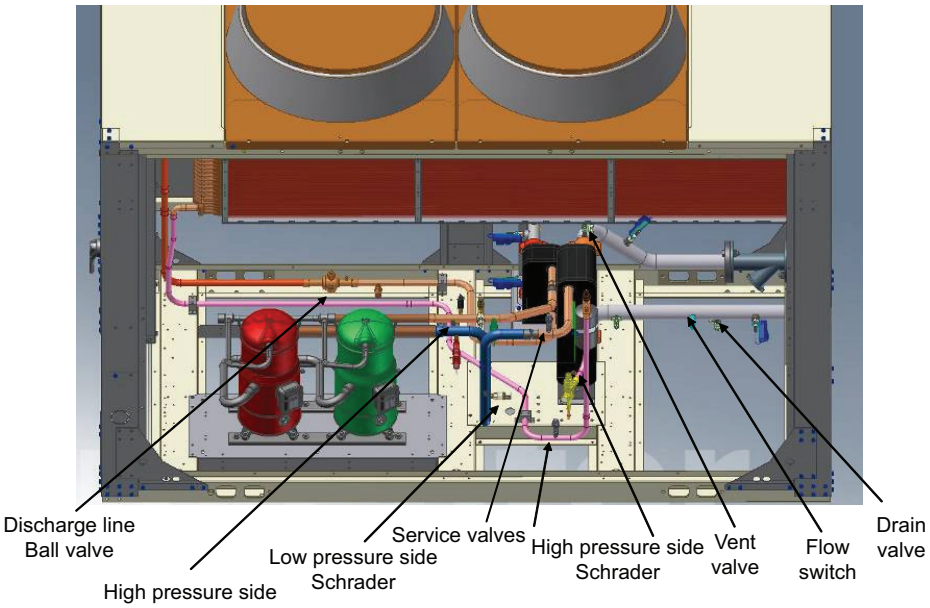


**Figure 54. V 40 to 70 ton component location, circuit 1**

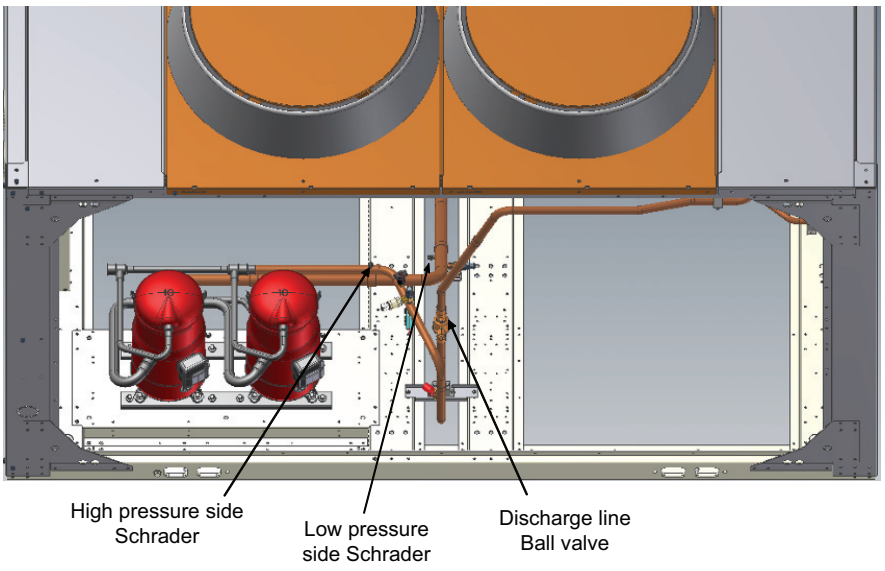

**Figure 55. V 40 to 70 ton component location, circuit 2**

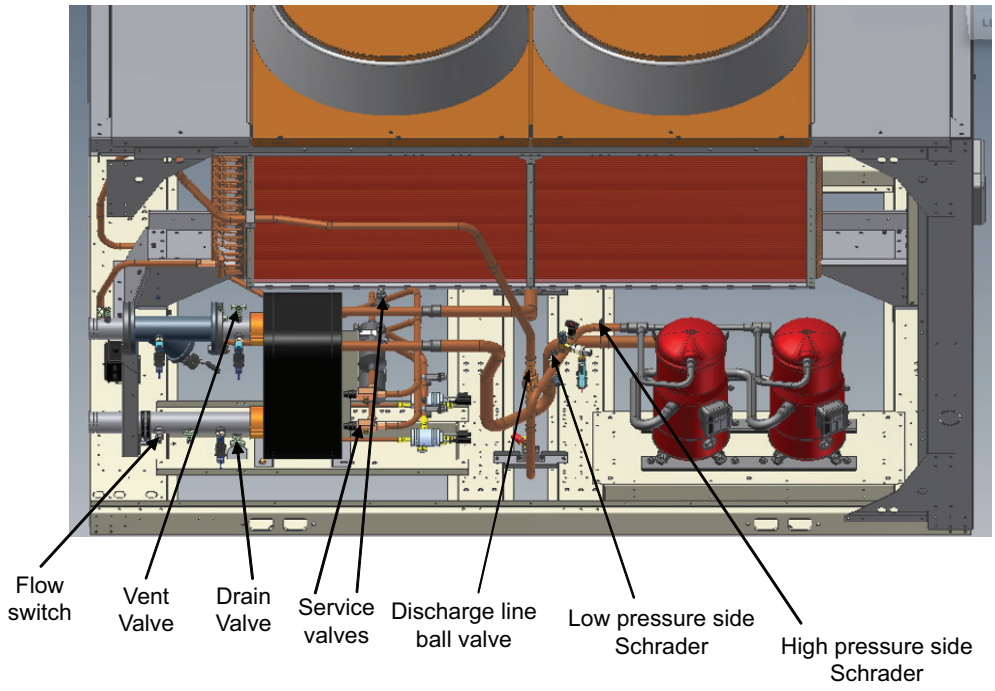


**Figure 56. W 80 to 130 ton component location, compressor view**

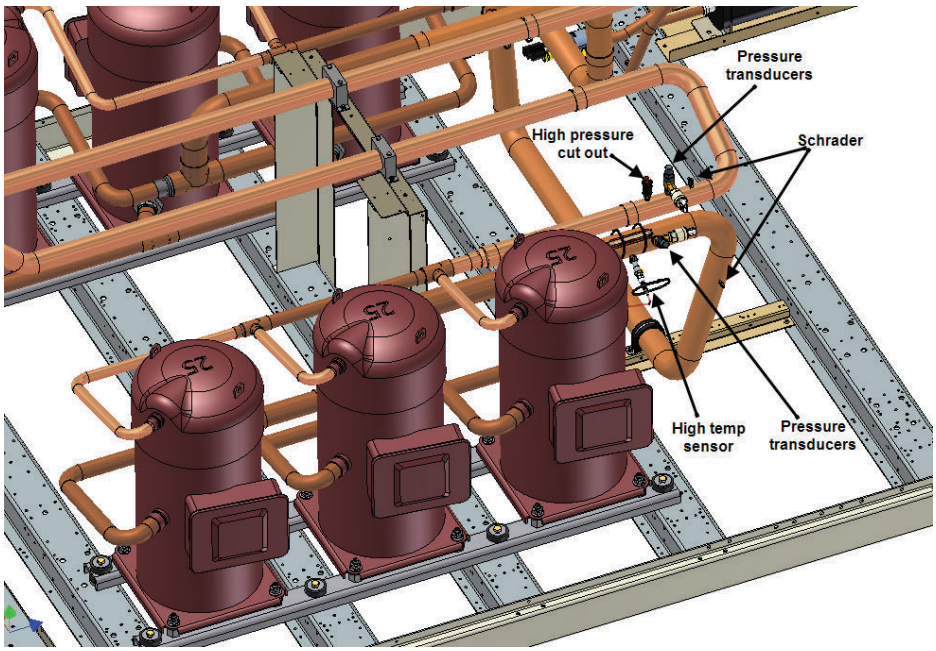

**Figure 57. W 80 to 130 ton component location, evaporator side**

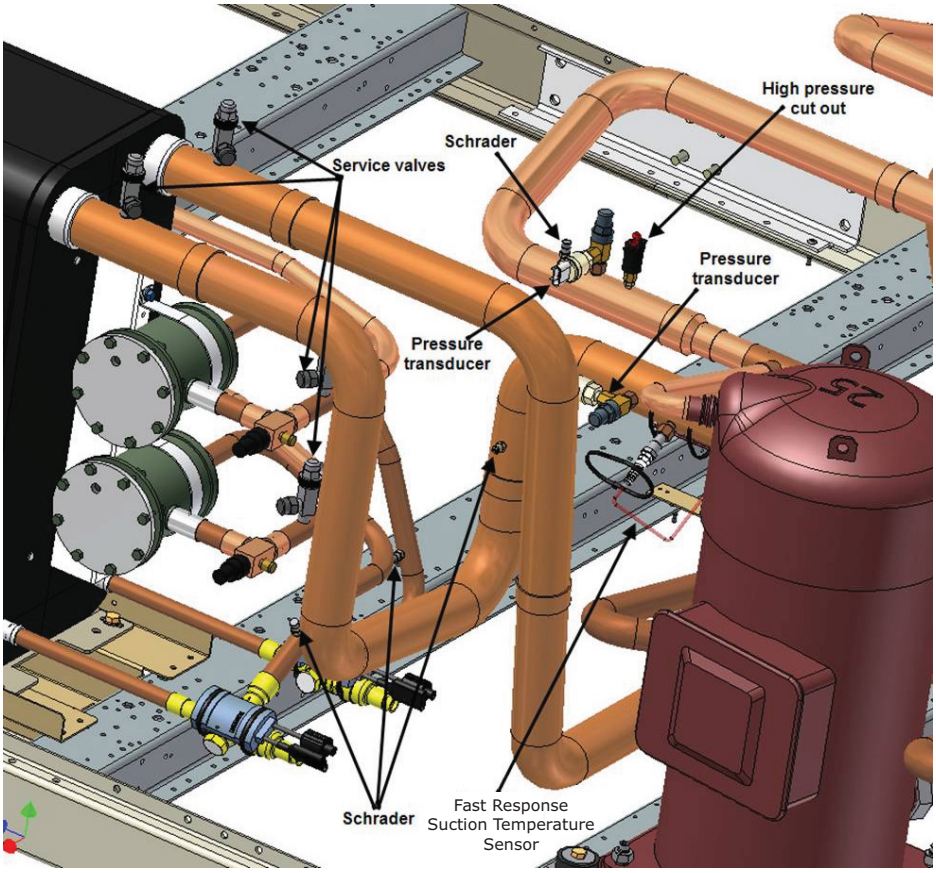


## Pump Package Components - Optional

**Figure 58. Pump package components, slant 20 to 35 ton, view 1**

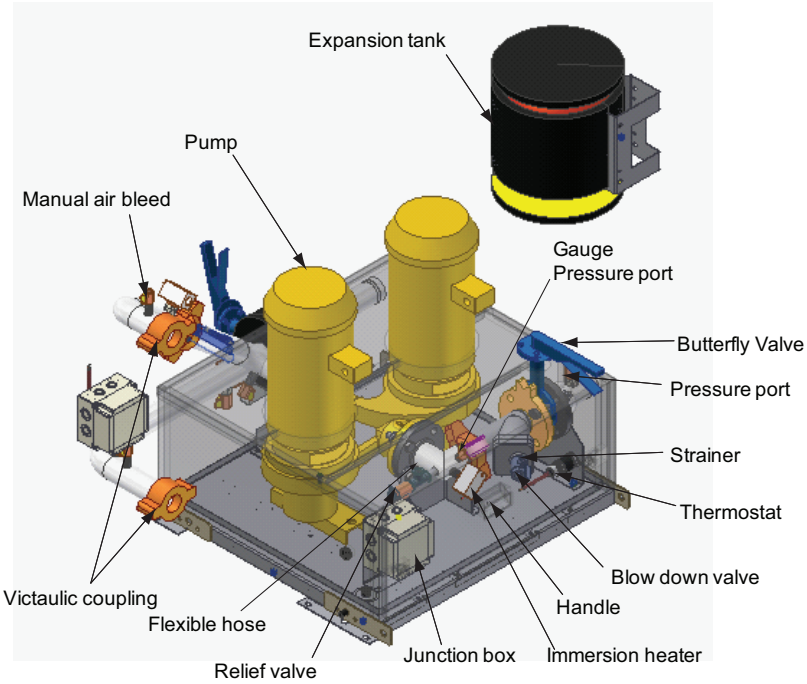

**Figure 59. Pump package components, slant 20 to 35 ton, view 2**

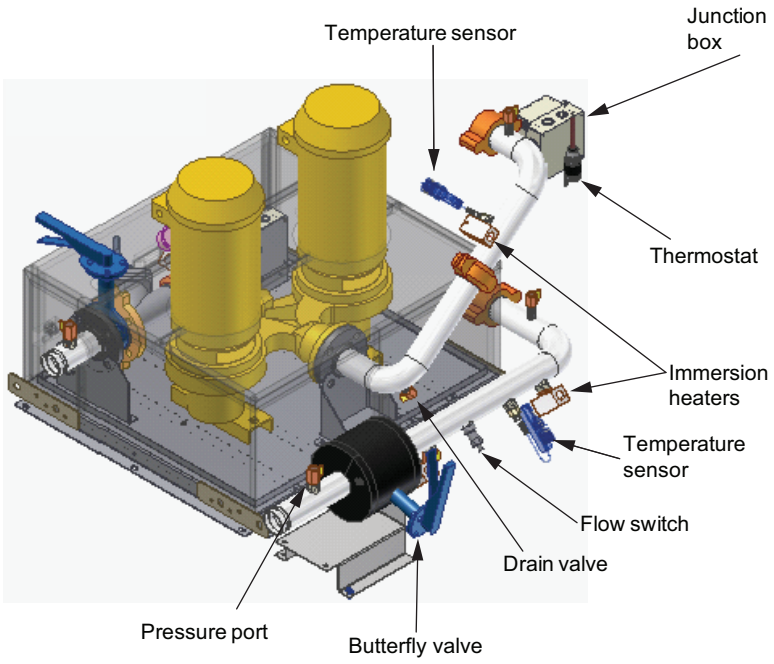


**Figure 60. Pump package components, V 40 to 70T, view 1**

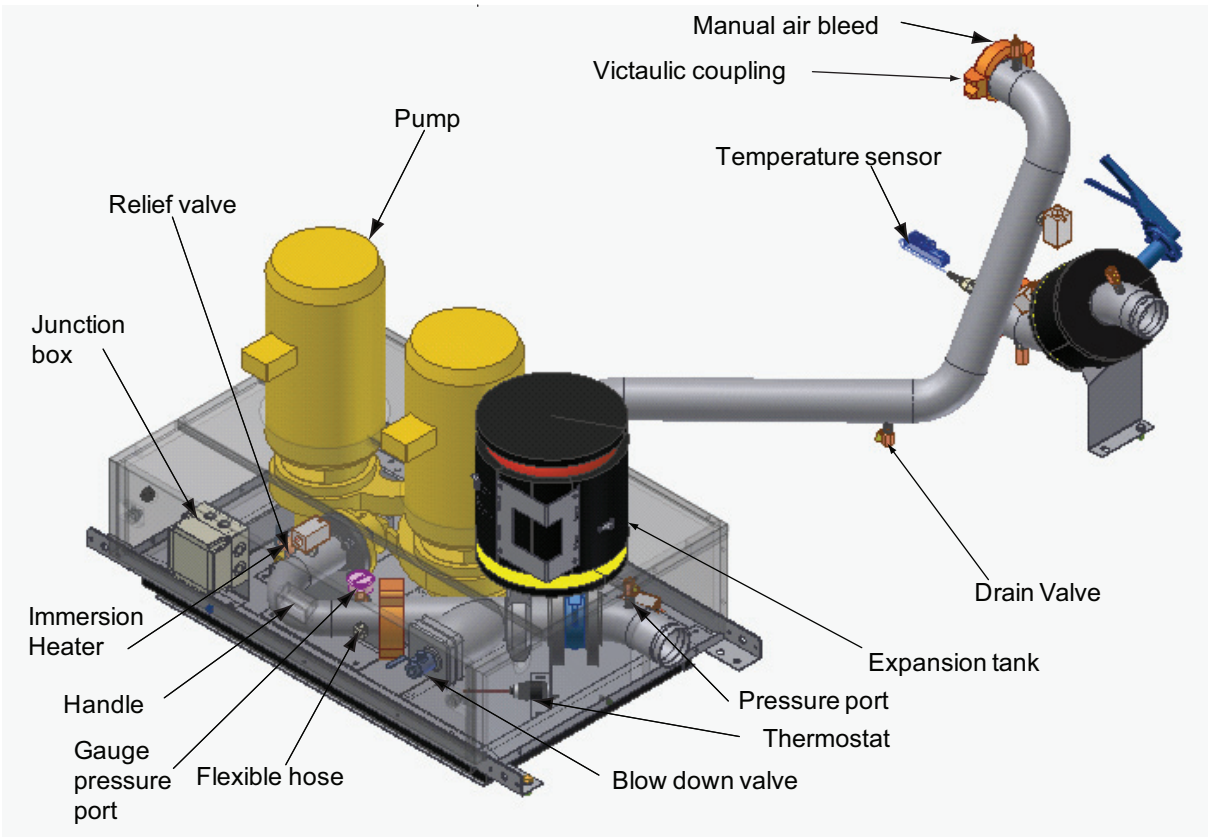

**Figure 61. Pump package components, V 40 to 70T, view 2**

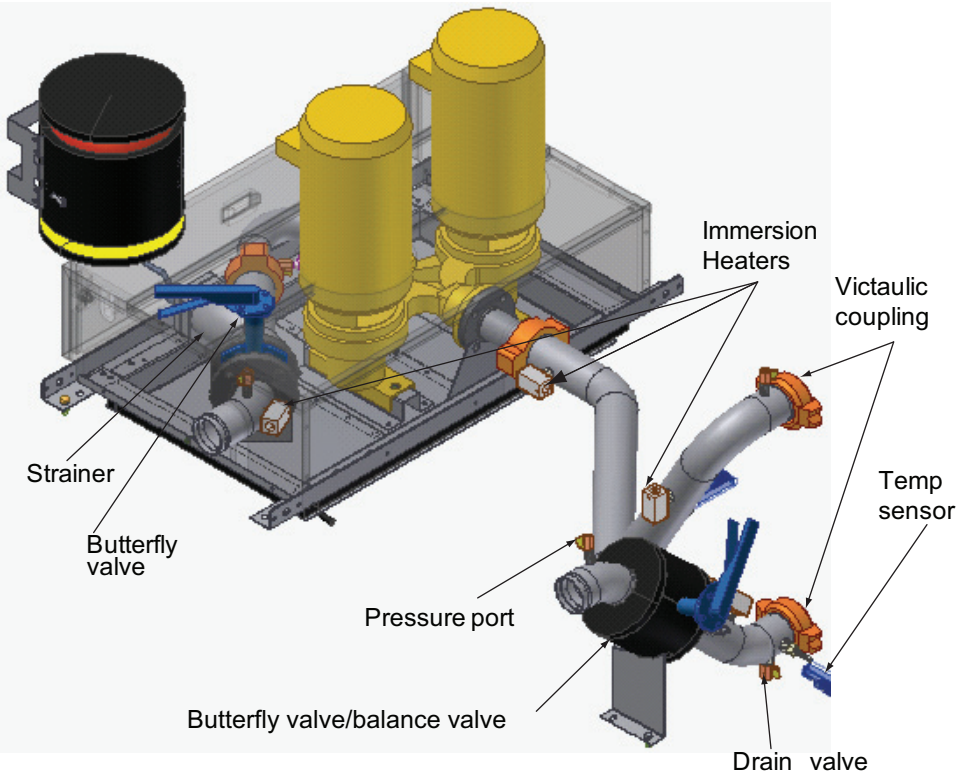


**Figure 62. Pump package components, V 40 to 70 ton, view 3**

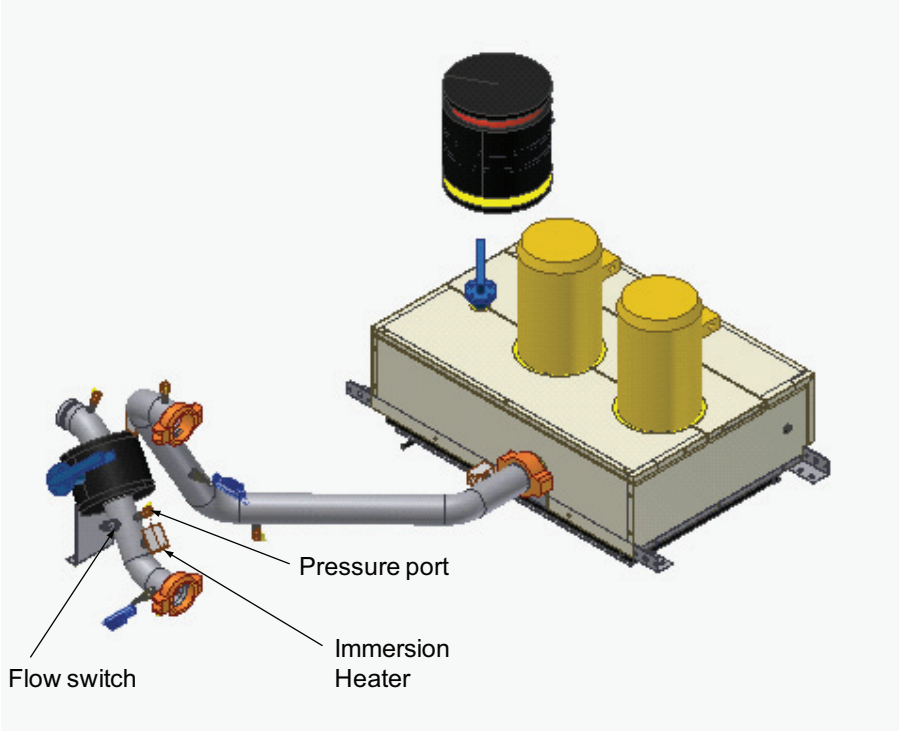

**Figure 63. Pump package components, W 80 to 130 ton, view 1**

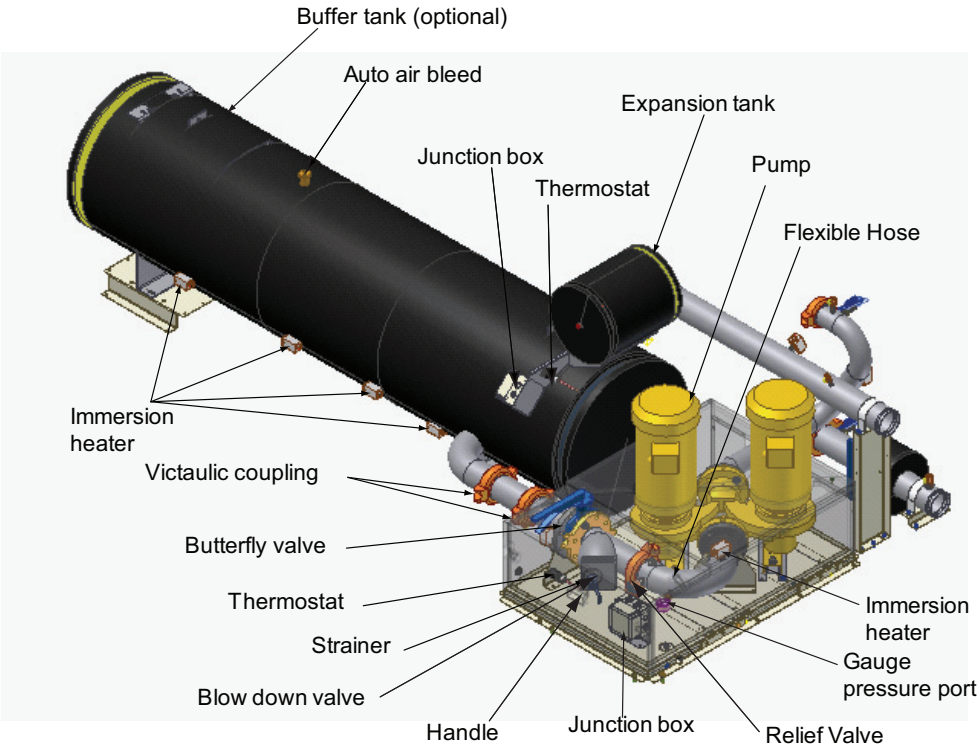


**Figure 64. Pump package components, W 80 to 130 ton, view 2**

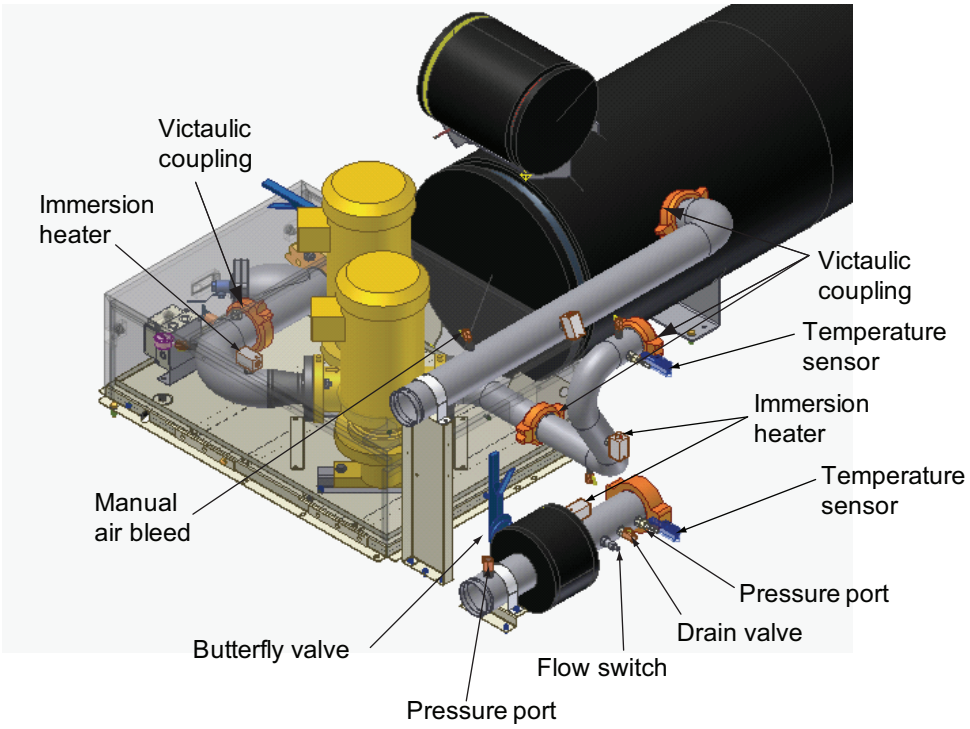

## Buffer Tank Components - Optional

**Figure 65. Buffer tank components, slant 20 to 35 ton and V 40 to 70 ton**

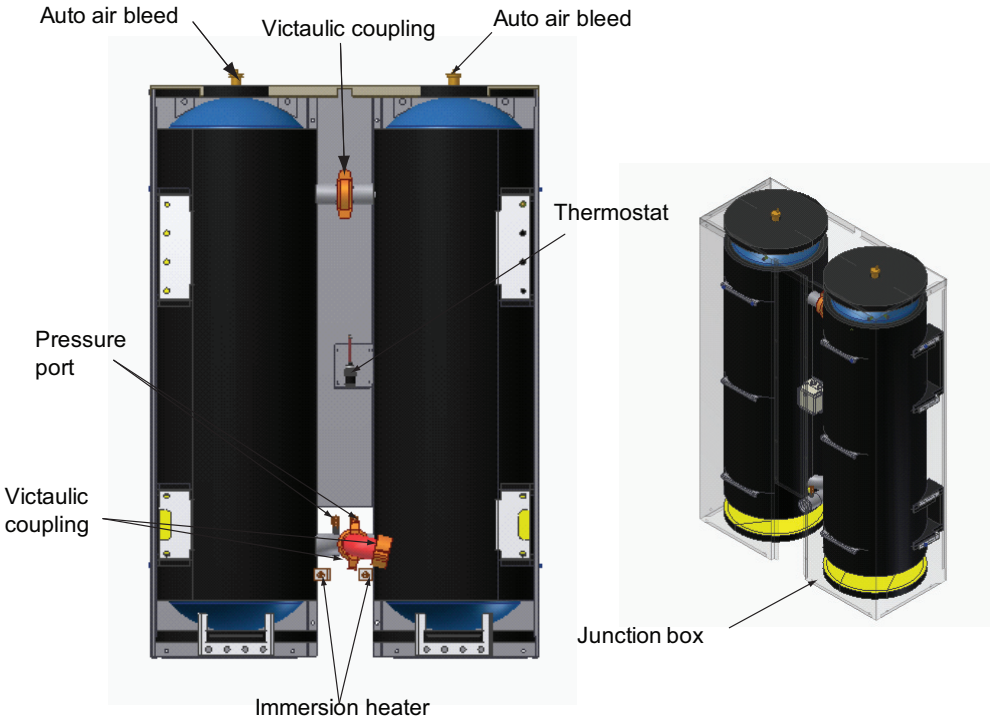


## Partial Heat Recovery Components

**Figure 66. Partial heat recovery components, slant 20 to 35 ton**

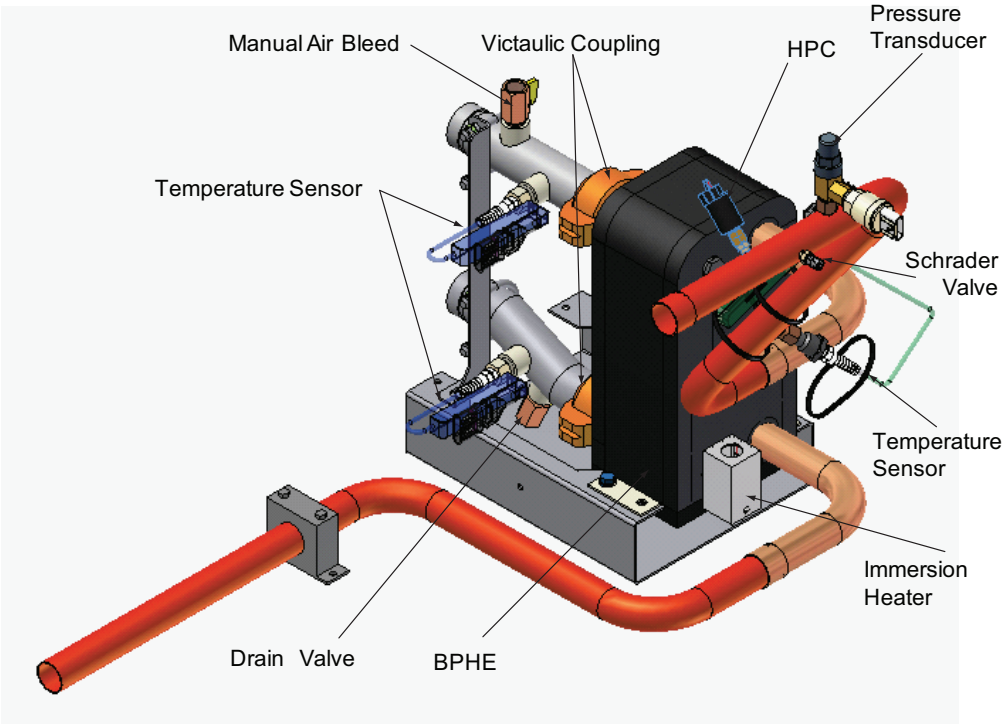

**Figure 67. Partial heat recovery components, V 40 to 70 ton**

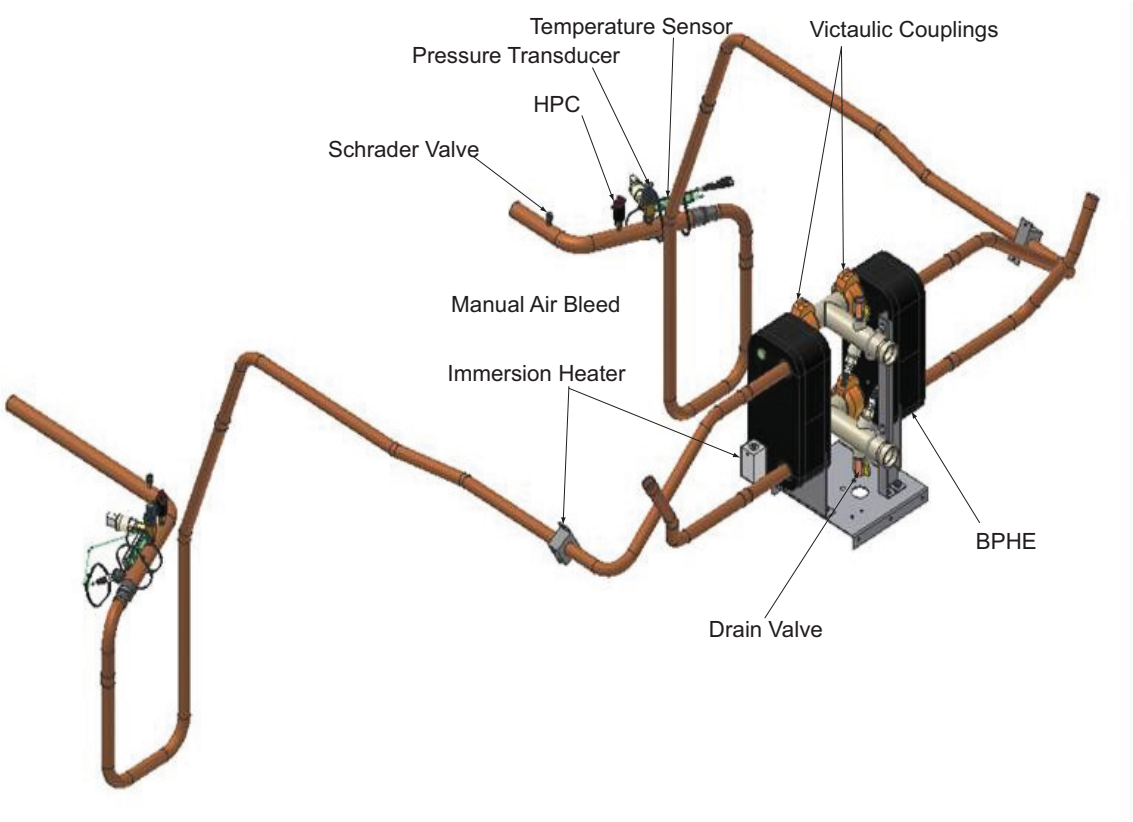


**Figure 68. Partial heat recovery components — W 80 to 130 ton**

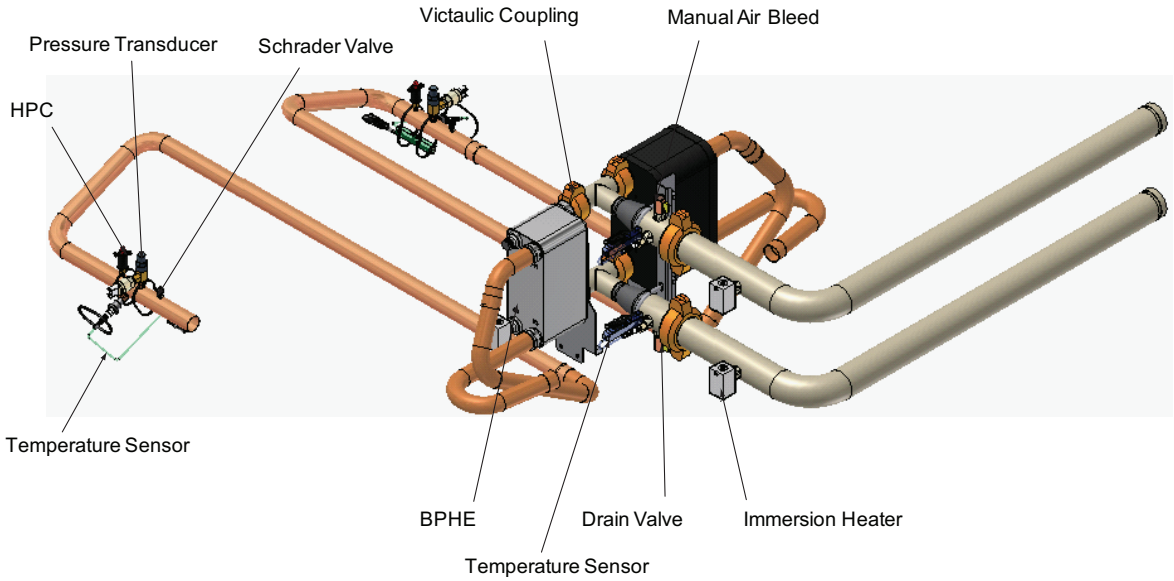

# Refrigerant Cycle

The refrigeration cycle of the Model CGAM chiller is conceptually similar to other Trane air-cooled chiller products. The CGAM chiller uses a brazed plate evaporator and an air-cooled condenser. The compressors use suction gas cooled motors and an oil management system to provide almost oil-free refrigerant to the condenser and evaporator for maximum heat transfer while lubricating and sealing compressor bearings. The lubrication system helps to assure long compressor life and contributes to quiet operation.

Refrigerant condensers in the air-cooled heat exchanger which is available in three configurations—slant, V and W—based on the CGAM nominal tonnage cooling capacity. Liquid refrigerant is metered into the brazed plate evaporator using an electronic expansion valve to maximize chiller efficiency at full and part load operation.

The CGAM chiller is equipped with a unit-mounted starter and control panel. Microprocessor-based unit control modules (Trane Tracer® CH530) provide accurate chilled water control and provide monitoring, protection and adaptive limit functions. The adaptive nature of the controls intelligently prevent the chiller from operating outside of its limits, or compensates for unusual operating conditions while keeping the chiller running rather than simply shutting off the chiller. If problems do occur, the CH530 controls provide diagnostic messages to help the operator in troubleshooting.

## Refrigerant Cycle Description

The CGAM refrigeration cycle is described using the pressure-enthalpy chart shown in Figure 69. Key State Points 1 through 5 are indicated on the chart. A schematic showing refrigerant components throughout the system is shown in Figure 69.

Refrigerant evaporation occurs in the brazed plate evaporator. Metered refrigerant vaporizes as it cools the chilled water or liquid flowing through the evaporator passages. The refrigerant vapor leaves the evaporator as superheated gas. State Point 1.

Refrigerant vapor generated in the evaporator flows to the compressor suction manifold where it enters and flows across the compressor motor windings to provide cooling. The vapor is then compressed in the compressor scroll chambers and discharged. Oil from the compressor sump lubricates the bearings and seals the small clearances between the compressor scrolls. Refrigerant vapor is discharged to the air-cooled condenser at State Point 2.

After the refrigerant vapor condenses into liquid (State Points 3 and 4) it is returned to the evaporator (State Point 5) where the refrigerant again flashes into vapor and the refrigeration cycle repeats.

**Figure 69. Pressure/enthalpy curve**

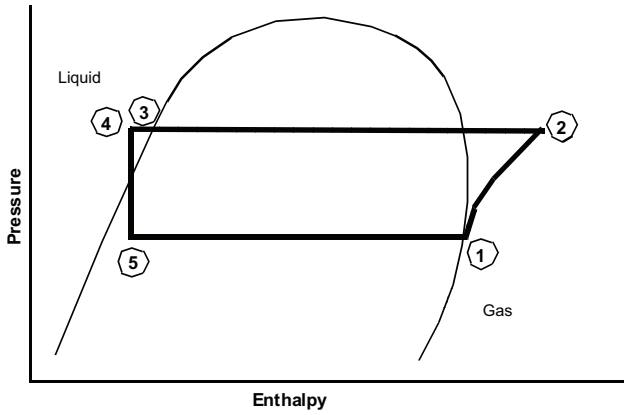


# Oil System Operation (CGAM)

The oil is efficiently separated inside the scroll compressor and will remain in the scroll compressor during all run cycles. Between 1-2% of the oil circulates around with the refrigerant.

# Sensor Requirements

Discharge temperature sensor is required for units with the following options:

- Low Temperature Process (model number digit 21 = B)
- Ice-Making (model number digit 21 = C)
- Low Leaving Water (model number digit 21 = D)
- Partial Heat Recovery with Fan Control (model number digit 24 = 1)
- Heat Pump (applicable only to units built in Epinal)

# Controls Interface

## CH530 Communications Overview

The Trane CH530 control system that runs the chiller consists of several elements:

- The main processor collects data, status, and diagnostic information and communicates commands to the starter module and the LLID (for Low Level Intelligent Device) bus. The main processor has an integral display (DynaView™).
- Low level intelligent device (LLID) bus. The main processor communicates to each input and output device (e.g. temperature and pressure sensors, low voltage binary inputs, analog input/output) all connected to a four-wire bus, rather than the conventional control architecture of signal wires for each device.
- The communication interface to a building automation system (BAS).
- A service tool to provide all service/maintenance capabilities.

Main processor and service tool (TechView™) software is downloadable from www.trane.com. The process is discussed later in this section under TechView Interface.

DynaView™ provides bus management. It has the task of restarting the link, or filling in for what it sees as “missing” devices when normal communications has been degraded. Use of TechView may be required.

The CH530 uses the IPC3 protocol based on RS485 signal technology and communicating at 19.2 Kbaud to allow 3 rounds of data per second on a 64-device network. A typical four-compressor CGAM will have around 30 devices.

Most diagnostics are handled by the DynaView™. If a temperature or pressure is reported out of range by a LLID, the DynaView™ processes this information and calls out the diagnostic. The individual LLIDs are not responsible for any diagnostic functions.

***Note:*** *It is imperative that the CH530 Service Tool (TechView) be used to facilitate the replacement of any LLID or reconfigure any chiller component. TechView is discussed later in this section.*

### Controls Interface

Each chiller is equipped with a DynaView™ interface. The DynaView™ has the capability to display information to the operator including the ability to adjust settings. Multiple screens are available and text is presented in multiple languages as factory-ordered or can be easily downloaded from www.trane.com.

TechView can be connected to the DynaView™ module and provides further data, adjustment capabilities, diagnostics information using downloadable software.

## DynaView Interface

The DynaView™ enclosure design is weatherproof and made of durable plastic for use as a device on the outside of the unit.

The display on DynaView™ is a 1/4 VGA display with a resistive touch screen and an LED backlight. The display area is approximately 4 inches wide by 3 inches high (102mm x 60mm).

### Key Functions

In this touch screen application, key functions are determined completely by software and change depending upon the subject matter currently being displayed. The basic touch screen functions are outlined below.

### Radio Buttons

Radio buttons show one menu choice among two or more alternatives, all visible. The radio button model mimics the buttons used on old-fashioned radios to select stations. When one is pressed, the one that was previously pressed “pops out” and the new station is selected. In the DynaView™ model the possible selections are each associated with a button. The selected button is darkened, presented in reverse video to indicate it is the selected choice. The full range of possible choices as well as the current choice is always in view.

### Spin Value Buttons

Spin values are used to allow a variable setpoint to be changed, such as leaving water setpoint. The value increases or decreases by touching the increment (+) or decrement (-) arrows.

### Action Buttons

Action buttons appear temporarily and provide the user with a choice such as **Enter** or **Cancel.**

### Hot Links

Hot links are used to navigate from one view to another view.

### File Folder Tabs

File folder tabs are used to select a screen of data. Just like tabs in a file folder, these serve to title the folder/screen selected, as well as provide navigation to other screens. In DynaView™, the tabs are in one row across the top of the display. The folder tabs are separated from the rest of the display by a horizontal line. Vertical lines separate the tabs from each other. The folder that is selected has no horizontal line under its tab, thereby making it look like a part of the current folder (as would an open folder in a file cabinet). The user selects a screen of information by touching the appropriate tab.

# Display Screens

## Basic Screen Format

The basic screen format appears as:

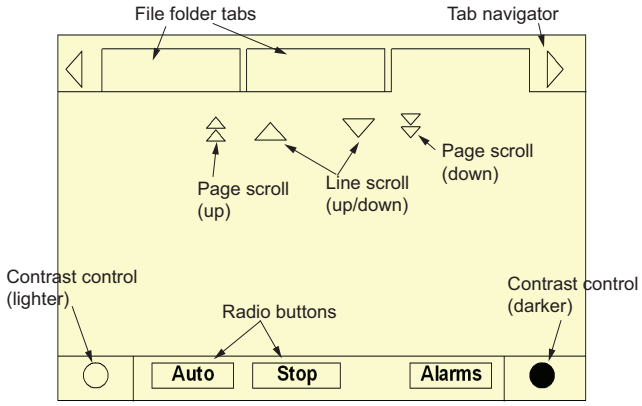


The file folder tabs across the top of the screen are used to select the various display screens.

Scroll arrows are added if more file tabs (choices) are available. When the tabs are at the left most position, the left navigator will not show and only navigation to the right will be possible. Likewise when the right most screen is selected, only left navigation will be possible.

The main body of the screen is used for description text, data, setpoints, or keys (touch sensitive areas). The Chiller Mode is displayed here.

The double up arrows cause a page-by-page scroll either up or down. The single arrow causes a line by line scroll to occur. At the end of the page, the appropriate scroll bar will disappear.

A double arrow pointing to the right indicates more information is available about the specific item on that same line. Pressing it will bring you to a subscreen that will present the information or allow changes to settings.

The bottom of the screen (Fixed Display) is present in all screens and contains the following functions. The **left circular area** is used to reduce the contrast/viewing angle of the display. **The right circular area** is used to increase the contrast/viewing angle of the display. The contrast may require re-adjustment at ambient temperatures significantly different from those present at last adjustment.

The other functions are critical to machine operation. The AUTO and STOP keys are used to enable or disable the chiller. The key selected is in black (reverse video). The chiller will stop when the STOP key is touched and after completing the Shutting Down mode.

Touching the AUTO key will enable the chiller for active cooling if no diagnostic is present. (A separate action must be taken to clear active diagnostics.)

The AUTO and STOP keys, take precedence over the Enter and Cancel keys. (While a setting is being changed, AUTO and STOP keys are recognized even if Enter or Cancel has not been pressed.)

The ALARMS button appears only when an alarm is present, and blinks (by alternating between normal and reverse video) to draw attention to a diagnostic condition. Pressing the ALARMS button takes you to the corresponding tab for additional information.

### Auto, Stop/Immediate Stop

The Auto and Stop keys will be presented as radio buttons within the persistent key display area. The selected key will be black.

The chiller will stop when the Stop key is touched, entering the Run Unload mode. An informational screen will be displayed for 5 seconds indicating that a second depression of an “Immediate Stop” key during this time period will result in an immediate stop. Pressing the “Immediate Stop” key while the immediate stop screen is displayed, will cause the unit to stop immediately, skipping operational pumpdown.

***NOTICE:***

**Equipment Damage!**

**Do NOT enable/disable the chiller by removing water flow or equipment damage can occur.**

Touching the Auto key will arm the chiller for active cooling if no diagnostic is present. As in UCP2, a separate action must be taken to clear active diagnostics.

The AUTO and STOP, take precedence over the ENTER and CANCEL keys. (While a setting is being changed, AUTO and STOP keys are recognized even if ENTER or CANCEL has not been pressed.

### Diagnostic Annunciation

When an active diagnostic is present, an Alarms key will be added to the persistent display area. This key will serve two purposes. The first purpose will be to alert the operator that a diagnostic exists. The second purpose is to provide navigation to a diagnostic display screen.

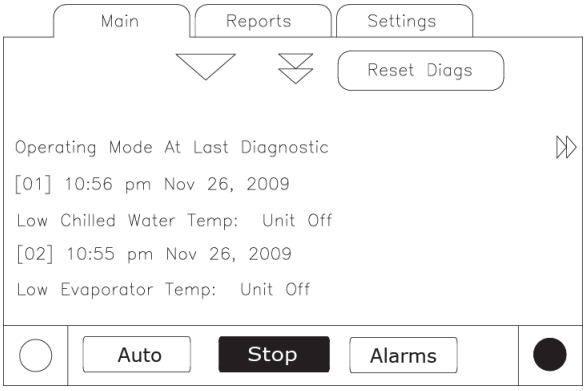


A complete listing of diagnostics and codes is included in the Diagnostic Section.

## Manual Override Exists

An indicator to present the presence of a manual override will share space with the Alarms enunciator key. While a manual override exists, the space used for the Alarms key will be occupied by a “Manual” icon, that will display solid inverse color similar to the appearance of the Alarms enunciator. An Alarm will take precedence of the Manual, until the reset of active alarms, at which point the Manual indicator would re-appear if such an override exists.

If the Manual indicator is pressed, the Manual Control Settings screen will be displayed.

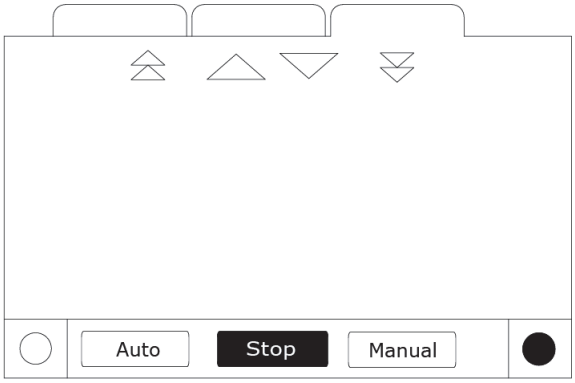


# Main Screen

The Main screen is a “dashboard” of the chiller. High level status information is presented so that a user can quickly understand the mode of operation of the chiller.

The Chiller Operating Mode will present a top level indication of the chiller mode (i.e. Auto, Running, Inhibit, Run Inhibit, etc.). The “additional info” icon will present a subscreen that lists in further detail the subsystem modes.

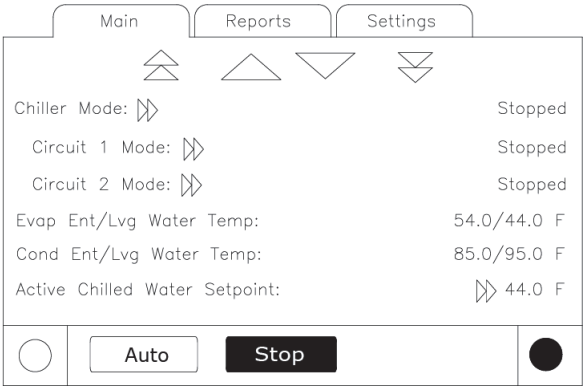


The Main screen shall be the default screen. After an idle time of 30 minutes the CH530 shall display the Main screen with the first data fields.

The remaining items (listed in the following table) will be viewed by selecting the up/down arrow icons.

**Table 63. Main screen data fields table**

| Description | Units | Resolution |
|---|---|---|
| Chiller Mode (>> submodes) | enumeration | |
| Circuit Mode (>> submodes) | enumeration | |
| Circuit 1 Mode (>> submodes) | enumeration | |
| Circuit 2 Mode (>> submodes) | enumeration | |
| Evap Ent/Lvg Water Temp | F / C | 0.1 |
| Active Chilled Water Setpoint (>>source) | F / C | 0.1 |
| Active Hot Water Setpoint (>>source) | F / C | 0.1 |
| Active Demand Limit Setpoint (>>source) | % | 1 |
| Outdoor Air Temperature | F / C | 0.1 |
| Software Type | enumeration | Scroll |
| Software Version | | X.XX |

## Chiller Operating Mode

The machine-operating mode indicates the operational status of the chiller. A subscreen with additional mode summary information will be provided by selection of an additional information icon (>>). The operating mode line will remain stationary while the remaining status items scroll with the up/down arrow keys.

## Active Chilled Water Setpoint

The active chilled water setpoint is the setpoint that is currently in use. It results from the logical hierarchy of setpoint arbitration by the main processor. It will be displayed to 0.1 degrees Fahrenheit or Celsius.

Touching the double arrow to the left of the Active Chilled Water Setpoint will take the user to the active chilled water setpoint arbitration sub-screen.

### Active Chilled Water Subscreen

The active chilled water setpoint is that setpoint to which the unit is currently controlling. It is the result of arbitration between the front panel, BAS, schedule, external, and auxiliary setpoints (schedule and auxiliary not shown in the following diagram), which in turn may be subjected to a form of chilled water reset.

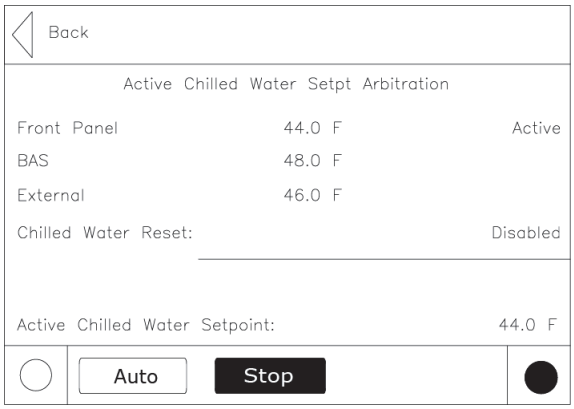


The chilled water reset status area in the right most column will display one of the following messages

- Return
- Constant Return
- Outdoor
- Disabled

The left column text “Front Panel”, “BAS” or “Schedule”, “External”, “Auxiliary”, “Chilled Water Reset”, and “Active Chilled Water Setpoint” will always be present regardless of installation or enabling those optional items. In the second column “-----” will be shown if that option is Not Installed, otherwise the current setpoint from that source will be shown.

Setpoints that are adjustable from the DynaView™ (Front Panel Chilled Water Setpoint, Auxiliary Chilled Water Setpoint) will provide navigation to their respective setpoint change screen via a double-arrow to the right of the setpoint source text. The setpoint change screen will look identical to the one provided in the Chiller Setpoints screen. The “Back” button on the setpoint change screen provides navigation back to the setpoint arbitration screen.

The “Back” button on the setpoint arbitration screen provides navigation back to the chiller screen.

## Other Active Setpoints

The Active Demand Limit Setpoint will behave the same was as the Active Chilled Water Setpoint, except that its units are in percent and there is an Ice Building source in place of the Auxiliary source. Front Panel Demand Limit Setpoint will provide navigation to its setpoint change screen.

## Password-Protected Settings

The user can change some settings from the DynaView™ display on the chiller. Other settings are password-protected. In order to change these setting the password is 314.

# Settings Screen

The Settings screen provides a user the ability to adjust settings necessary to support daily tasks. The layout provides a list of sub-menus, organized by typical subsystem. This organization allows each subscreen to be shorter in length which should improve the user's navigation.

A sample Settings screen is a list of the subsystems as shown below.

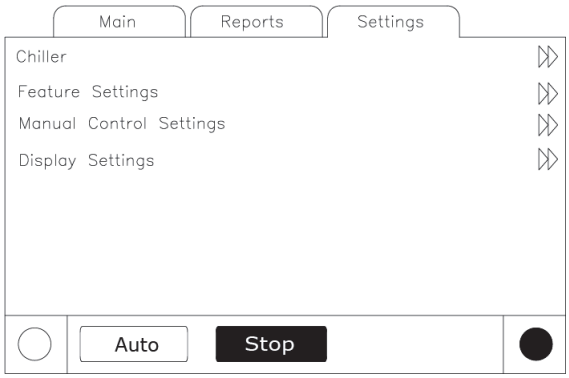


### Settings Sub-Screens - Table of Text, Data, Ranges, etc.

Below is the table of text, resolution, field size, enumerated selections, and data for Settings subscreens. See the functional specification “CGAM Settings and Setpoints” for further information such as ranges and operation.

**Table 64. Unit**

| Description | Resolution or (Enumerations) | Units |
|---|---|---|
| Front Panel Cool | Cool | Enum |
| Front Panel Chilled Water Setpt: | + or - XXX.X | Temperature |
| Auxiliary Chilled Water Setpt: | + or - XXX.X | Temperature |
| Front Panel Demand Limit Setpt: | XXX | Percent |
| Front Panel Ice Build Cmd: | On/Auto | Enum |
| Front Panel Ice Term Setpt: | + or - XXX.X | Temperature |
| Front Panel Noise Stb Cmd: | On/Auto | Enum |
| Setpoint Source: | (BAS/Ext/FP, Ext/ Front Panel, Front Panel), BAS/Ext/FP | Enum |

### Table 65. Feature settings

| Description | Resolution or (Enumerations), Default | Units |
|---|---|---|
| Power-Up Start Delay: | 10 seconds | Seconds (MM:SS) |
| Cool Low Ambient Lockout: | (Enable, Disable), Enable | Enum |
| Cool Low Ambient Lockout Stpt: | + or - XXX.X | Temperature |
| Water Pump Off Delay: | 1 minute | Minutes (HH:MM) |
| Ice Building: | (Enable, Disable), Disable | Enum |
| PHR Fan Control: | (Enable, Disable), Disable | Enum |
| Local Time of Day Schedule | Subscreen (see below) | |
| External/BAS | Subscreen (see below) | |
| Chilled Water Reset | Subscreen (see below) | |

### Table 66. External/BAS feature settings (subscreen of feature settings)

| Description | Resolution or (Enumerations), Default | Units |
|---|---|---|
| Ext Chilled Setpt: | (Enable, Disable), Disable | Enum |
| Ext Demand Limit Setpoint: | (Enable, Disable), Disable | Enum |
| Max Capacity Debounce Time: | 30 seconds | Seconds (MM:SS) |
| Limit Annunc Debounce Time: | 30 seconds | Seconds (MM:SS) |
| LCI-C Diag Encoding: | (Text, Code) Text | Enum |
| LCI-C Diag Language: | (English, Selection 2, Selection 3) English (0) | Enum |

### Table 67. Chilled water reset feature settings (subscreen of feature settings)

| Description | Resolution or (Enumerations), Default | Units |
|---|---|---|
| Chilled Water Reset: | (Const Return, Outdoor, Return, Disable), Disable | Enum |
| Return Reset Ratio: | XXX | Percent |
| Return Start Reset: | XXX.X | Temperature |
| Return Maximum Reset: | XXX.X | Temperature |
| Outdoor Reset Ratio: | XXX | Percent |
| Outdoor Start Reset: | XXX.X | Temperature |
| Outdoor Maximum Reset: | XXX.X | Temperature |

### Table 68. Control settings

| Description | Resolution or (Enumerations), Default | Units |
|---|---|---|
| Cooling Design Delta Temp: | XXX.X | Delta Temperature |
| Heating Design Delta Temp: | XXX.X | Delta Temperature |
| Differential to Start: | XXX.X | Delta Temperature |
| Differential to Stop: | XXX.X | Delta Temperature |
| Staging Deadband Adjustment: | XXX.X | Delta Temperature |
| Capacity Control Softload Time: | 120 seconds | Seconds (MM:SS) |
| Circuit Staging Option: | (Bal Starts/Hrs, Circuit 1 Lead, Circuit 2 Lead), Bal Starts/Hrs | Enum |
| Compressor Staging Option: | (Fixed, Bal Starts/Hrs) | Enum |
| Leaving Water Temp Cutout: | XX.X | Temperature |
| Low Refrigerant Temp Cutout: | XX.X | Temperature |
| Evap Flow Overdue Wait Time: | 30 seconds | Seconds (MM:SS) |
| Disch Press Limit Setpt: | 85% | Percent |
| Disch Press Limit Unload Setpt: | 97% | Percent |

### Table 69. System manual control settings

| Description | Resolution or (Enumerations), Default | Units | Monitor Value |
|---|---|---|---|
| Evap Water Pump | (Auto, On), Auto | Enum | 1) Evap Flow status 2) Override Time Remaining |
| Clear Restart Inhibit Timer | (Clear Timer) | | 1) Restart Inhibit Time (composite value) |
| Capacity Control | (Auto, Manual) Auto | Enum | |
| Binding | Special | Special | None |

### Table 70. Circuit manual control settings

| Description | Resolution or (Enumerations), Default | Units | Monitor Value |
|---|---|---|---|
| Front Panel Ckt Lockout | (Not Locked Out, Locked Out), Not Locked Out | Enum | |
| Cprsr A Lockout | (Not Locked Out, Locked Out), Not Locked Out | Enum | |
| Cprsr B Lockout | (Not Locked Out, Locked Out), Not Locked Out | Enum | |
| Cprsr C Lockout | (Not Locked Out, Locked Out), Not Locked Out | Enum | |
| Manual EXV Control: | (Auto, Manual), Auto | Enum | |

**Table 70. Circuit manual control settings (continued)**

| Description | Resolution or (Enumerations), Default | Units | Monitor Value |
|---|---|---|---|
| Manual EXV Position Cmd: | XXX | Percent | EXV Status Suction Pressure |
| Cooling EXV Manual Ctrl: | (Auto, Manual), Auto | Enum | |
| Cooling EXV Manual Position Cmd: | XXX | Percent | EXV Status Suction Pressure |
| Cprsr A Pumpdown | Status: (Avail, Not Avail, Pumpdown) Override Subscreen command buttons: (Abort, Pumpdown) - *button is either grayed out or not shown if not available* | Enum | Suction Pressure |
| Cprsr B Pumpdown | Status: (Avail, Not Avail, Pumpdown) Override Subscreen command buttons: (Abort, Pumpdown) - *button is either grayed out or not shown if not available* | Enum | Suction Pressure |
| Cprsr C Pumpdown | Status: (Avail, Not Avail, Pumpdown) Override Subscreen command buttons: (Abort, Pumpdown) - *button is either grayed out or not shown if not available* | Enum | Suction Pressure |

# Local Time of Day Schedule Screen

To access the optional Local Time of Day Schedule Screen it must be configured in TechView™. This option will then be shown under the Feature Settings screen.

This screen shows the overall feature enable/disable setting, plus a listing of all 10 events, including their event time and active days of the week.

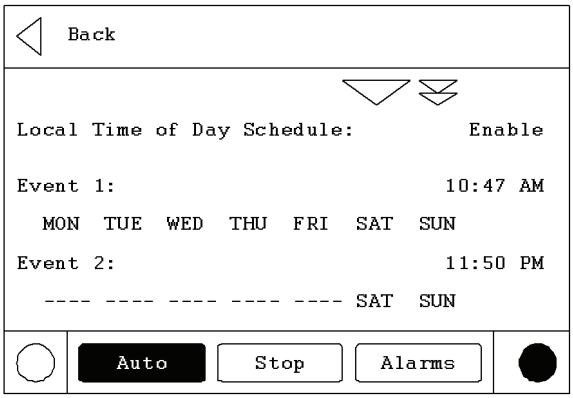


## Local Settings Event Screen

This screen displays the details for a particular event, including the active days, event time, and the Local Schedule arbitrated setpoints. Selecting a given item will allow the user to modify it.

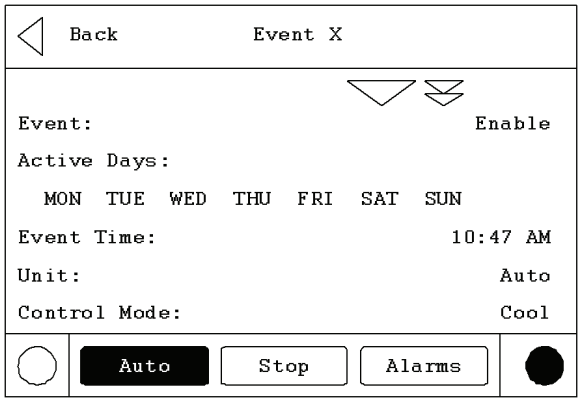


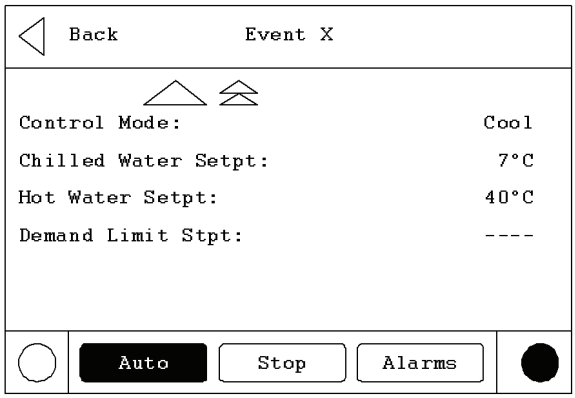


## Event Enable/Disable Screen

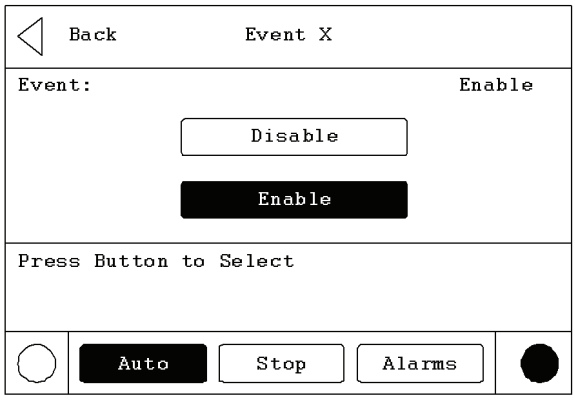


## Event Active Days Screen

This screen is unusual because it does not use radio buttons, which only allow one active selection at a time. These buttons are more like “selection buttons” or check boxes. The user can select any combination of days, or none at all.

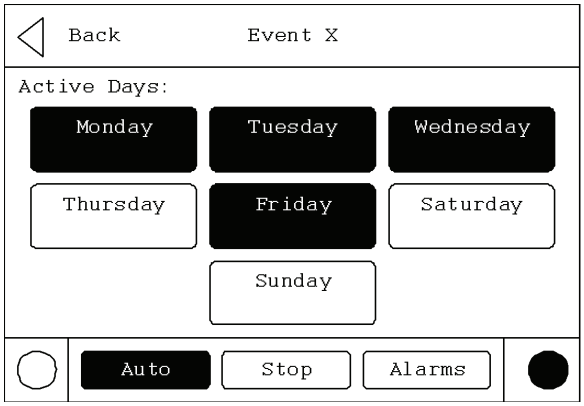


## Event Time Screen

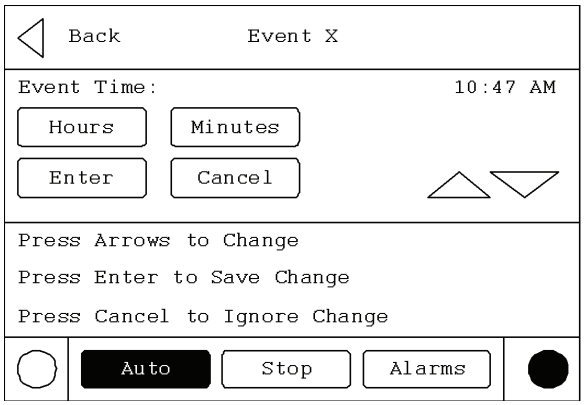


## Event Arbitrated Settings Screens

For analog setpoints, the screen is slightly different than the standard screen, because there are two additional buttons - “Used” and “Not Used”. Selecting “Used” will make the setting valid and allow the user to change the value. Selecting “Not Used” will make the setting invalid, and will not allow the user to change the value.

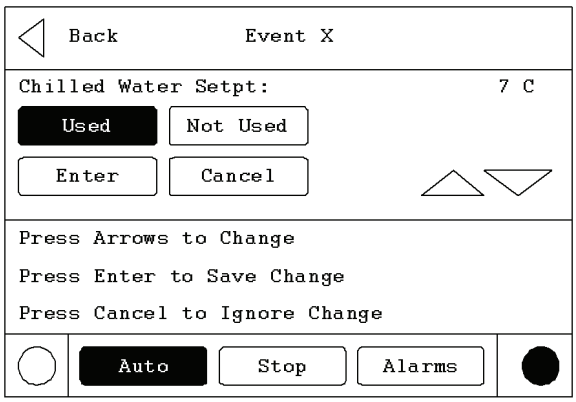


**Table 71. Display settings**

| Description | Resolution or (Enumerations), Default | Units |
|---|---|---|
| Date Format | (“mmm dd, yyyy”, “dd-mmm-yyyy”), “mmm dd, yyyy | Enum |
| Date[4] | | |
| Time Format | (12-hour, 24-hour), 12-hour | Enum |
| Time of Day[4] | | |
| Keypad/Display Lockout[3] | (Enable, Disable), Disable | Enum |
| Display Units | (SI, English), English | Enum |
| Pressure Units | (Absolute, Gauge), Gauge | Enum |
| Local Atmospheric Pressure: | XXX.X | Pressure (always absolute) |
| Language[1] | (English, Selection 2, Selection 3), English (0) | Enum |

(1) Language choices are dependent on what the Service Tool has setup in the Main Processor. Get Radio Button names from Main Processor setups. Language selections will include English and qty 2 alternate as loaded by TechView™.
(2) Temperatures will be adjustable to 0.1 deg F or C. The Main Processor will provide the minimum and maximum allowable value.
(3) Enables a DynaView™ Lockout screen. All other screens time-out in 30 minutes to this screen. The DynaView™ Lockout Screen will have 0-9 keypad to permit the user to re-enter the other DynaView™ screens with a fixed password. See below for further details.
(4) The Date and Time setup screen formats deviate slightly from the standard screens defined above. See the alternate screen layouts below.
(5) Language shall always be the last setting listed on the Control Settings menu (which will also always be the last item listed on the Settings menu list). This will allow a user to easily find language selection if looking at an unrecognizable language.
(6) The pump on mode terminates after 60 minutes.

Upon selecting a Settings list all setpoints available to change and the current value appear. Operator selects a setpoint by touching either the verbal description or setpoint value, causing the screen to switch to either Analog Settings Subscreen or Enumerated Settings Subscreen.

## Analog Setting Subscreens

Analog Settings Subscreen displays the current value of the chosen setpoint in the upper ½ of the display. It is displayed in a changeable format consistent with its type. Binary setpoints are considered to be simple two state enumerations and will use radio buttons. Analog setpoints are displayed as spin buttons. The lower half of the screen is reserved for help screens.

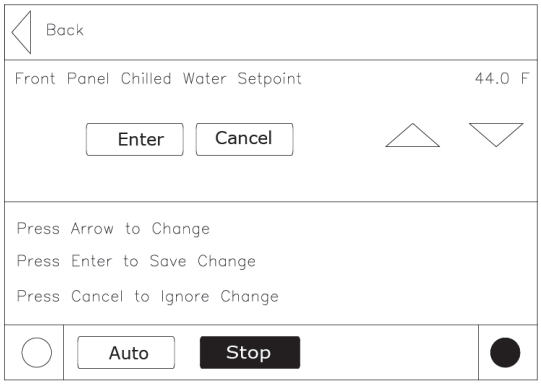

All setpoint subscreens will execute the equivalent of a Cancel key if any display activities cause the subscreen to be left before a new setpoint is entered. E.g. If Alarms key is pressed before a new setpoint is entered, new setpoint will be canceled. The same applies to any time-outs.

Pressing the Auto or Stop keys will not cause a cancel since the setpoint subscreen is not left on this action.

## Enumerated Settings Subscreen

The enumerated setpoint subscreen has no cancel or enter key. Once a radio key is depressed the item is immediately set to the new enumeration value.

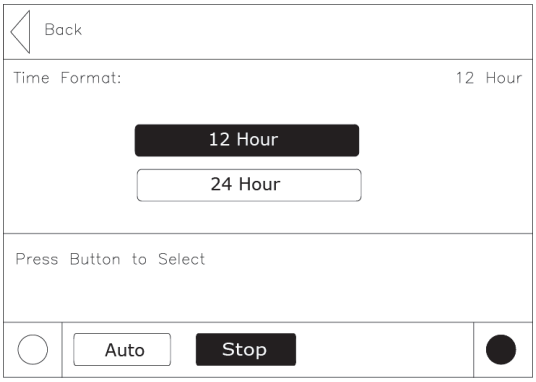


## Mode Override Subscreens

The Mode Override subscreen has no cancel or enter key. Once a radio key is depressed that new value is immediately assumed.

Mode Override for Enumerated Settings is shown below:

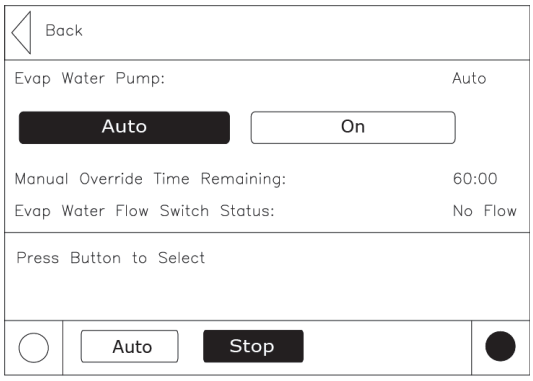


## Date/Time Subscreen

The setpoint screen for setting up the CH530 date is shown below: The user must select Day, Month, or Year and then use the up/down arrows to adjust.

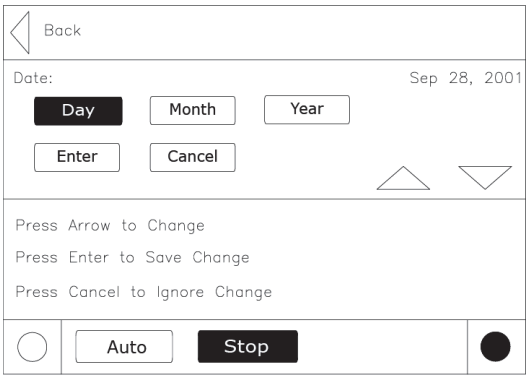


The setpoint screen for setting up the CH530 time with a 12 hour format is shown below. User must select Hour, or Minute, then use up/down arrows to adjust. Adjusting hours will also adjust am/pm.

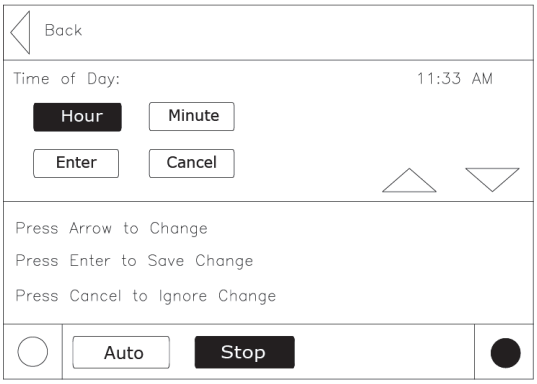

# Lockout Screen

The DynaView™ Display and Touch Screen Lock screen is shown. This screen is used if the Display and Touch Screen Lock feature is Enabled. Thirty minutes after the last key stroke this screen will be displayed and the Display and Touch Screen will be locked out until “159 Enter” is entered.

Until the proper password is entered there will be no access to the DynaView™ screens including all reports, all setpoints, and Auto/Stop/Alarms/Interlocks. The password “159” is not programmable from either DynaView™ or TechView™.

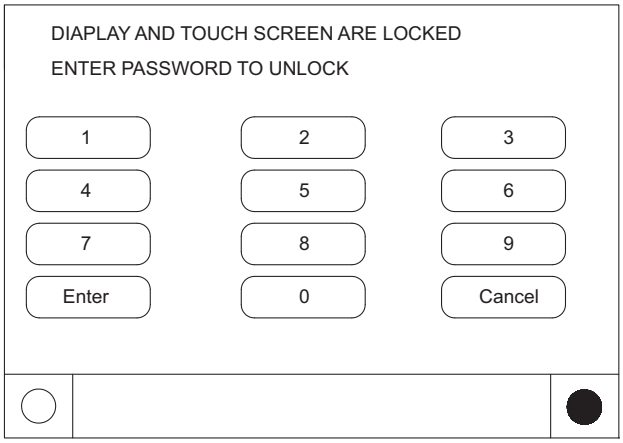


If the Display and Touch Screen Lock feature is Disabled, a similar screen including “Enter 159 to Unlock” will show if the MP temperature is approximately less than 32°F (0°C) and it has been 30 minutes after the last key stroke. Note: the main processor is equipped with an on-board temp sensor which enables the ice protection feature (OAT is not required).

Freezing rain can form on the touch panel and actuate the touch screen as the rain freezes on its surface. A specific pattern of key presses will avoid this issue.

# Reports

The Reports tab will allow a user to select from a list of possible reports headings (i.e. Custom, ASHRAE Guideline 3, Refrigerant, etc.) Each report will generate a list of status items as defined in the tables that follows:

Historic Diagnostics are also included in this menu.

**Table 72. Report name: system evaporator**

| Description | Resolution | Units |
|---|---|---|
| Evap Entering Water Temp: | + or - XXX.X | Temperature |
| Evap Leaving Water Temp: | + or - XXX.X | Temperature |
| Evap Pump Inverter 1 Run Cmd: | On, Off | Enumeration |
| Evap Pump 1 Command: | On, Off | Enumeration |
| Evap Pump 2 Command: | On, Off | Enumeration |
| Evap Water Flow Switch Status: | Flow, No Flow | Enumeration |

**Table 73. Report name: circuit evaporator**

| Description | Resolution | Units |
|---|---|---|
| Suction Pressure | XXX.X | Pressure |
| Suction Saturated Rfgt Temp: | + or - XXX.X | Temperature |
| Suction Temperature: | + or - XXX.X | Temperature |
| Evap Approach Temp: | + or - XXX.X | Temperature |
| EXV Position Status: | XXX.X | Percent |
| Heating EXV Position Status: | XXX.X | Percent |

**Table 74. Report name: system condenser**

| Description | Resolution | Units |
|---|---|---|
| Outdoor Air Temperature: | + or - XXX.X | Temperature |
| Heat Rcvy Entering Water Temp: | + or - XXX.X | Temperature |
| Heat Rcvy Leaving Water Temp: | + or - XXX.X | Temperature |

**Table 75. Report name: circuit condenser**

| Description | Resolution | Units |
|---|---|---|
| Discharge Pressure: | XXX.X | Pressure |
| Discharge Saturated Rfgt Temp: | + or - XXX.X | Temperature |
| Discharge Temperature: | + or - XXX.X | Temperature |
| Cond Approach Temp: | + or - XXX.X | Temperature |
| Current Air Flow: | XXX.X | Percent |

**Table 76. Report name: system compressor**

| Description | Resolution | Units |
|---|---|---|
| Chiller Running Time: | XXXX:XX | hr:min |

**Table 77. Report name: circuit compressor**

| Description | Resolution | Units |
|---|---|---|
| Compressor A Starts: | XXXX | Integer |
| Compressor A Running Time: | XXXX:XX | hr:min |
| Compressor B Starts: | XXXX | Integer |
| Compressor B Running Time: | XXXX:XX | hr:min |
| Compressor C Starts: | XXXX | Integer |
| Compressor C Running Time: | XXXX:XX | hr:min |

**Table 78. Report name: system ASHRAE chiller log**

| Description | Resolution | Units |
|---|---|---|
| Current Time/Date: | XX:XX mmm dd, yyyy | Date / Time |
| Chiller Mode: | | Enum |
| Active Chilled Water Setpoint: | XXX.X | Temperature |
| Active Hot Water Setpoint: | XXX.X | Temperature |
| Evap Entering Water Temp: | XXX.X | Temperature |
| Evap Leaving Water Temp: | XXX.X | Temperature |
| Evap Water Flow Switch Status: | | Enum |
| Outdoor Air Temperature: | XXX.X | Temperature |
| Active Demand Limit Setpoint: | XXX | Percent |

**Table 79. Report name: circuit ASHRAE chiller log**

| Description | Resolution | Units |
|---|---|---|
| Circuit Mode: | | Enum |
| Suction Pressure: | XXX.X | Pressure |
| Suction Saturated Rfgt Temp: | XXX.X | Temperature |
| Evap Approach Temp: | XXX.X | Temperature |
| Discharge Pressure: | XXX.X | Pressure |
| Discharge Saturated Rfgt Temp: | XXX.X | Temperature |
| Cond Approach Temp: | XXX.X | Temperature |
| Compressor A Starts: | XXXX | Integer |
| Compressor A Running Time: | XX:XX | Hours: Minute |
| Compressor B Starts: | XXXX | Integer |
| Compressor B Running Time: | XX:XX | Hours: Minute |
| Compressor C Starts: | XXXX | Integer |
| Compressor C Running Time: | XX:XX | Hours: Minute |

# Power Up and Self Tests

## Power-Up DynaView

DynaView™ will progress through three Power-Up screens:

First Screen, Application Status, Boot Software P/N, Self Test and Application Time Stamp.

This screen will display for 3-10 seconds. This screen will give the status of the Application software, the Boot Software P/N, display Self Test results and display the Application Part Number (CGAM 6200-0450-01). The contrast will also be adjustable from this screen. The message “Selftest Passed” may be replaced with “Err2: RAM Error” or “Err3: CRC Failure”.

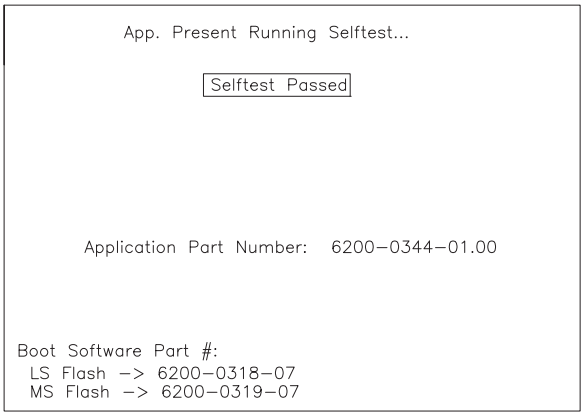


## Display Formats

Temperature settings can be expressed in F or C, depending on Display Units settings.

Pressure settings can be expressed in psia, psig, kPaa (kPa absolute), or kPag (kPa gauge) depending on Display Units settings.

Dashes (“-----”) appearing in a temperature or pressure report, indicates that the value is invalid or not applicable.

## Languages

The languages for DynaView™ will reside in the main processor. The main processor will hold three languages, English, and two alternate languages. The service tool (TechView™) will load the main processor with user selected languages from a list of available translations.

# TechView

TechView™ is the PC (laptop) based tool used for servicing Tracer CH530. Technicians that make any chiller control modification or service any diagnostic with Tracer CH530 must use a laptop running the software application “TechView.” TechView is a Trane application developed to minimize chiller downtime and aid the technicians understanding of chiller operation and service requirements.

***Important:*** *Performing any Tracer CH530 service functions should be done only by a properly trained service technician. Please contact your local Trane service agency for assistance with any service requirements.*

TechView software is available via Trane.com. (http://www.trane.com/COMMERCIAL/DesignAnalysis/TechView.aspx?i=1435)

This download site provides a user the TechView installation software and CH530 main processor software that must be loaded onto your PC in order to service a CH530 main processor. The TechView service tool is used to load software into the Tracer CH530 main processor.

## Minimum PC requirements to install and operate TechView

- Microsoft® Windows® XP Professional, Windows Vista Business or Windows 7 Enterprise operating system, Windows 10
- Internet Explorer 6.0 or higher
- USB 2.0 or higher
- Pentium II, III or higher processor
- 128Mb RAM minimum for TechView™, 1G recommended for total Windows system
- 1024 x 768 resolution of display
- CD-ROM (optional for copying TechView install to CD)
- 56K modem (optional for internet connection)
- ROVER USB-to-Serial (USB to 9-pin male)

***Note:*** *TechView™ was designed for the preceding listed laptop configuration. Any variation will have unknown results. Therefore, support for TechView is limited to only those operating systems that meet the specific configuration listed here. Only computers with a Pentium II class processor or better are supported; Intel Celeron, AMD, or Cyrix processors have not been tested.*

TechView™ is also used to perform any CH530 service or maintenance function. Servicing a CH530 main processor includes:

- Updating main processor software
- Monitoring chiller operation
- Viewing and resetting chiller diagnostics
- Low Level Intelligent Device (LLID) replacement and binding
- Main processor replacement and configuration modifications
- Setpoint modifications
- Service overrides

## TechView Software Download, Installation

This information can also be found at http://www.trane.com/COMMERCIAL/DesignAnalysis/TechView.aspx?i=1435.

1. Create a folder called “CH530” on your (C:\CH530) on your hard drive. This \CH530 folder is the standard recommended location for the installation file. Storing the installation file in this location helps you remember where it is stored and makes it easier for technical support personnel to assist you.
2. Click the link for the latest version on the TechView™ Software Download page. Enter your name, e-mail address and other required information. Click **Submit**.
3. A download link will be sent to the e-mail address provided. Before you click the link please note:
   - Sent link may only be used one time.
   - Internet options must be set correctly to allow download. To verify correct setting:
     – Open Internet Explorer Browser
     – Click **Tools**
     – Select **Internet Options**
     – Select **Security** tab
     – Click on **Internet** zone
     – Click **Custom Level** button
     – Scroll to **Downloads** section
     – Verify/Enable “Automatic prompting for file downloads”
     – Click **OK**
     – Click YES on warning window
     – Click Apply, then OK

     ***Note:*** *If this setting is incorrect, you may or may not receive an error message during download attempt.*
4. Click the download link in the e-mail message.
   - If the download window does not open immediately, please look for a yellow highlighted message bar/line near the top of your browser. It may contain a message such as “To help protect your security, Internet Explorer blocked this site from downloading files to your computer. Click here for options...” Click on message line to see options.
   - When dialog box appears, click **Save** and navigate to the CH530 folder created in Step 1. Click OK.
   - If you do not complete the download successfully, you will have to request another download link (Step 2).
5. Navigate to the CH530 folder created in Step 1. Double-click the installation (.exe) file. The License Agreement dialog box appears.
6. Click **I Agree** after reviewing License Agreement. The **Choose Components** dialog box appears. All components are selected by default. (These are the actual MP versions for all units.) Deselect any components you do not want.

***Note:*** *Deselecting components reduces the size of the installed application.*

7. Click **Install**. A progress meter dialog box appears. An information file appears when installation is complete.

   ***Note:*** *Techview requires a current version of JAVA. If you do not have the current release, TechView installation will be interrupted, and you will be provided with information for required JAVA software download. Once you have completed the JAVA installation, return to Step 5 to restart installation.*

## Unit View

Unit view is a summary for the system organized by chiller subsystem. This provides an overall view of chiller operating parameters and gives you an “at-a-glance” assessment of chiller operation.

**Figure 70. Unit view**

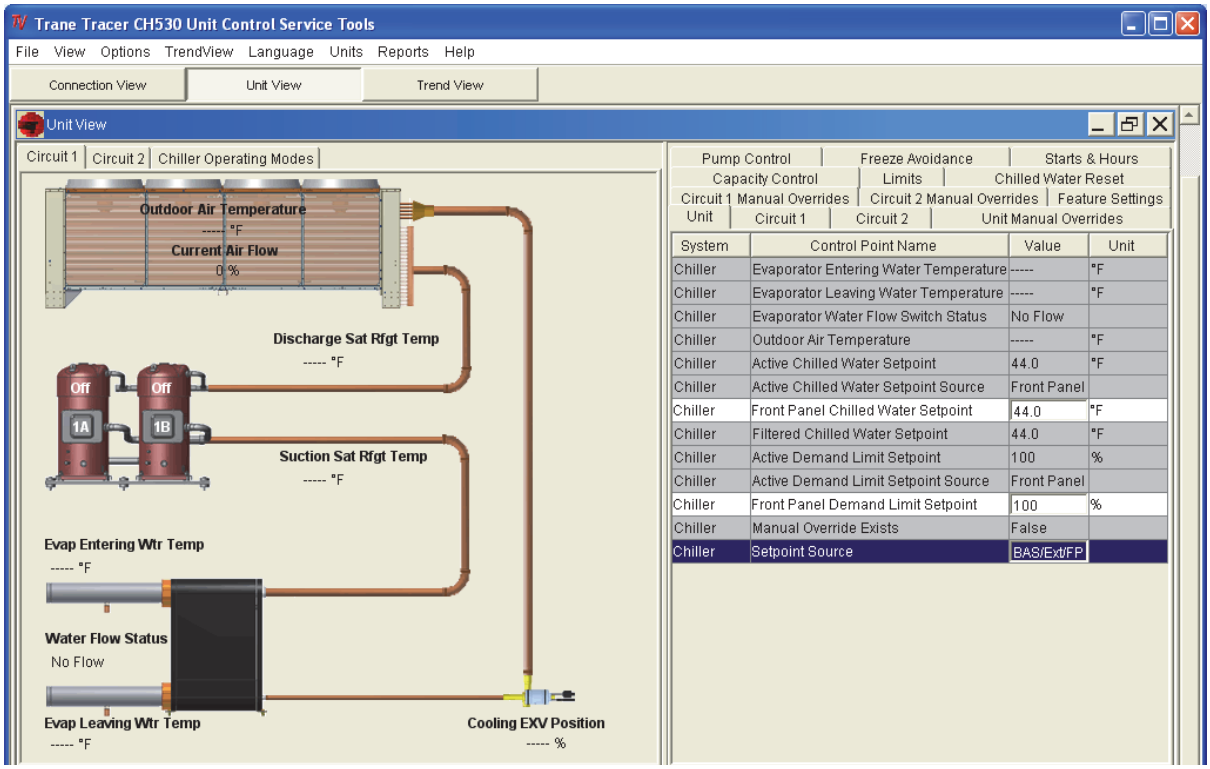


Unit View also displays, in real time, all non-setpoint data organized by tabs. As data changes on the chiller it is automatically updated in the Unit View.

**Figure 71. Unit view tabs**

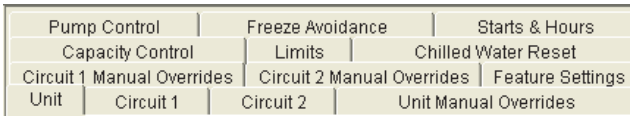


The Control Panel tab displays important operating information for the unit and allows you to change several key operating parameters. The panel is divided into four or more sub-panels (depending on the number of circuits in the unit).

The Operating Mode tab displays the unit, circuit and compressor top level operating modes.

The Hours and Starts tab displays the number a hours (total) a compressor has run and the number of times the compressor has started. This window plays a key role in evaluating maintenance requirements.

Upon successful Local Connect TechView™ will display UNIT VIEW. The Unit View displays the system, control point name, value and unit of measure. It reflects active setpoints and allows you to make changes.

CGAM Unit View is shown below:

## Circuit/Compressor Lockout

In order to lock out a circuit the user must go to the Unit View/ Circuit 1 Manual Overrides Tab and then select the Front Panel Lockout for circuit 1 and/or circuit 2. It is also possible to lockout individual compressors from the same Circuit 1 Manual Overrides Tab in this view.

**Table 80.Unit view tabs - detail**

| Tab | Item Type | Units | Min Value | Max Value | Default Value |
|---|---|---|---|---|---|
| **Unit Tab** | | | | | |
| Evaporator Entering Water Temperature | Status | Temp (°C) | | | |
| Evaporator Leaving Water Temperature | Status | Temp (°C) | | | |
| Evaporator Water Flow Switch Status | Status | Flow/No Flow | | | |
| Outdoor Air Temperature | Status | Temp (°C) | | | |
| Active Chilled Water Setpoint | Status | Temp (°C) | | | |
| Active Chilled Water Setpoint Source | Status | BAS/External/Front Panel/ Auxiliary/Schedule | | | |
| Front Panel Chilled Water Setpoint | Setting | Temp °C (°F) | Capacity Control Chilled Water Setpoint | 20°C (68°F) | 6.7°C (44°F) |
| BAS Chilled Water Setpoint | Status | Temp (°C) | | | |
| Local Schedule Chilled Water Setpoint | Status | Temp (°C) | | | |
| External Chilled Water Setpoint | Status | Temp (°C) | | | |
| Auxiliary Chilled Water Setpoint | Status | Temp (°C) | | | |
| Filtered Chilled Water Setpoint | Status | Temp (°C) | | | |
| Active Demand Limit Setpoint | Status | % | | | |
| Active Demand Limit Setpoint Source | Status | BAS/External/Front Panel/ Auxiliary/Schedule | | | |
| Front Panel Demand Limit Setpoint | Setting | % | Smallest Capacity Step | 100 | 100 |
| BAS Demand Limit Setpoint | Status | % | | | |
| Local Schedule Demand Limit Setpoint | Status | % | | | |
| External Demand Limit Setpoint | Status | % | | | |
| Active Ice Building Command | Status | Off /On | | | |
| Front Panel Ice Building Command | Setting | Auto | No Request | Ice Building Request | No Request |
| Active Ice Termination Setpoint | Status | Temp (°C) | | | |
| Front Panel Ice Termination Setpoint | Setting | Temp °C (°F) | -6.67°C (20°F) | 0°C (32°F) | -2.78°C (27°F) |
| Manual Override Exists | Status | False/True | | | |
| Setpoint Source | Setting | BAS/Ext/FP | | | |
| **Circuit 1 Tab** | | | | | |
| Suction Pressure | Status | Pressure (kPa) | | | |
| Discharge Pressure | Status | Pressure (kPa) | | | |
| Suction Saturated Refrigerant Temperature | Status | Temp (°C) | | | |
| Suction Temperature | Status | Temp (°C) | | | |
| Discharge Saturated Refrigerant Temperature | Status | Temp (°C) | | | |
| Discharge Temperature | Status | Temp (°C) | | | |
| Condenser Approach Temperature | Status | Temp (°C) | | | |
| Evaporator Approach Temperature | Status | Temp (°C) | | | |
| EXV Position Status (%) | Status | % | | | |
| **Circuit 2 Tab** | | | | | |
| Suction Pressure | Status | Pressure (kPa) | | | |
| Discharge Pressure | Status | Pressure (kPa) | | | |
| Suction Saturated Refrigerant Temperature | Status | Temp (°C) | | | |
| Suction Temperature | Status | Temp (°C) | | | |
| Suction Superheat | Status | Delta Temp (°C) | | | |
| Discharge Saturated Refrigerant Temperature | Status | Temp (°C) | | | |
| Discharge Temperature | Status | Temp (°C) | | | |
| Condenser Approach Temp | Status | Temp (°C) | | | |

**Table 80.Unit view tabs - detail (continued)**

| Tab | Item Type | Units | Min Value | Max Value | Default Value |
|---|---|---|---|---|---|
| Evaporator Approach Temp | Status | Temp (°C) | | | |
| EXV Position Status (%) | Status | % | | | |
| **Unit Manual Overrides Tab** | | | | | |
| Manual Capacity Control | Setting | Auto/Manual | | | |
| Manual Capacity Control Command | Setting | Unload/Hold/Load | | | |
| Clear Restart Inhibit | Setting | | | | |
| Maximum Restart Inhibit Time Remaining | Status | Time (Seconds to MM:SS) | | | |
| Manual Evaporator Pump Control | Setting | Auto/On | | | |
| Manual Evaporator Pump Override Time | Status | Time (Seconds to MM:SS) | | | |
| **Circuit 1 Manual Overrides Tab** | | | | | |
| Front Panel Lockout | Setting | Not Locked/Locked | | | |
| Compressor A Lockout | Setting | Not Locked/Locked | | | |
| Compressor B Lockout | Setting | Not Locked/Locked | | | |
| Compressor C Lockout | Setting | Not Locked/Locked | | | |
| Manual EXV Control | Setting | Auto/Manual | | | |
| Manual EXV Control Percent | Setting | % | | | |
| Compressor 1A Pumpdown Command | Setting | Abort | | | |
| Compressor 1A Pumpdown Status | Status | Available/Not Available/In Progress/Inhibited | | | |
| Compressor 1B Pumpdown Command | Setting | Abort/Start | | | |
| Compressor 1B Pumpdown Status | Status | Available/Not Available/In Progress/Inhibited | | | |
| Compressor 1C Pumpdown Command | Setting | Abort/Start | | | |
| Compressor 1C Pumpdown Status | Status | Available/Not Available/In Progress/Inhibited | | | |
| Suction Pressure | Status | Pressure (kPa) | | | |
| **Circuit 2 Manual Overrides Tab** | | | | | |
| Front Panel Lockout | Setting | Not Locked/Locked | Auto | Stop | Auto |
| Compressor A Lockout | Setting | Not Locked/Locked | Auto | Stop | Auto |
| Compressor B Lockout | Setting | Not Locked/Locked | Auto | Stop | Auto |
| Compressor C Lockout | Setting | Not Locked/Locked | Auto | Stop | Auto |
| Manual EXV Control | Setting | Auto/Manual | | | |
| Manual EXV Control Percent | Setting | % | | | |
| Compressor 2A Pumpdown Command | Setting | Abort/Start | | | |
| Compressor 2A Pumpdown Status | Status | Available/Not Available/In Progress/Inhibited | | | |
| Compressor 2B Pumpdown Command | Setting | Abort/Start | | | |
| Compressor 2B Pumpdown Status | Status | Available/Not Available/In Progress/Inhibited | | | |
| Compressor 2C Pumpdown Command | Setting | Abort/Start | | | |
| Compressor 2C Pumpdown Status | Status | Available/Not Available/In Progress/Inhibited | | | |
| Suction Pressure | Status | Pressure (kPa) | | | |
| **Feature Settings Tab** | | | | | |
| Local Atmospheric Pressure | Setting | Pressure (kPa) | 68.9 kPa | 110.3 kPa | 101.4 kPa |
| Power-Up Start Delay | Setting | Time (Seconds) | 0 | 600 | 0 |
| Operational Pumpdown Temperature Setpoint | Setting | Temp °C (°F) | -26°C (-14.8°F) | -10°C (14°F) | -17.78°C (0°F) |
| External Chilled Water Setpoint | Setting | Disable/Enable | | | Disabled |
| External Demand Limit Setpoint | Setting | Disable/Enable | | | Disabled |

**Table 80.Unit view tabs - detail (continued)**

| Tab | Item Type | Units | Min Value | Max Value | Default Value |
|---|---|---|---|---|---|
| Limit Annunciation Debounce Time | Setting | Time (Seconds) | 0s | 3600s | 1200s |
| Maximum Capacity Annunciation Debounce Time | Setting | Time (Seconds) | 0s | 3600s | 1200s |
| Ice Building Feature | Setting | Disable/Enable | | | Disabled |
| EXV Recalibration Time | Setting | Time (Seconds) | ? | ? | |
| **Capacity Control Tab** | | | | | |
| Cooling Design Delta Temperature | Setting | Delta Temp °C (°F) | 1°C (1.8°F) | 12°C (21.6°F) | 5.56°C (10°F) |
| Differential To Start | Setting | Delta Temp °C (°F) | 1°C (1.8°F) | 6°C (10.8°F) | 2.78°C (5°F) |
| Differential To Stop | Setting | Delta Temp °C (°F) | 1°C (1.8°F) | 7°C (12.6°F) | 2.78°C(5°F) |
| Staging Deadband Adjustment | Setting | Delta Temp °C (°F) | -1°C (-1.8°F) | 5°C (9°F) | 0°C (0°F) |
| Circuit Staging Option | Setting | Balance Strts-Hrs/Circuit 1 Lead/ Circuit 2 Lead | | | Balance Starts Hours |
| Compressor Staging Option | Setting | Fixed Sequence/ Balanced Strts-Hrs | | | Fixed Sequence |
| Compressor Start Delay Time | Setting | Time (Seconds) | 0 s | 600 s | 60 s |
| Capacity Control Softload Time | Setting | Time (Seconds) | 0 s | 3600 s | 900 s |
| **Limits Tab** | | | | | |
| Cooling Low Ambient Lockout | Setting | Disable/Enable | | | Enabled |
| Cooling Low Ambient Lockout Setpoint | Setting | Temp °C (°F) | -20°C (-4°F) | 20°C (68°F) | -10°C (14°F) |
| Discharge Pressure Limit Setpoint | Setting | % | 80% | 120% | 85% |
| Discharge Pressure Limit Unload Setpoint | Setting | % | 90% | 120% | 97% |
| Restart Inhibit Free Starts | Setting | Starts | | | 2 |
| Restart Inhibit Start To Start Time | Setting | Time (Minutes) | | | 6 min |
| Chilled Water Reset Tab | | | | | |
| Chilled Water Reset Type | Setting | Disable/Return/Outdoor Air/ Constant | | | |
| Return Reset Ratio | Setting | % | 10% | 120% | 50% |
| Return Start Reset | Setting | Delta Temp °C (°F) | 2.22°C (36°F) | 16.67°C (62°F) | 5.55°C (42°F) |
| Return Maximum Reset | Setting | Delta Temp °C (°F) | 0°C (32°F) | 11.11°C (52°F) | 2.78°C (37°F) |
| Outdoor Reset Ratio | Setting | % | -80% | 80% | 10% |
| Outdoor Start Reset | Setting | Temp °C (°F) | 10°C (50°F) | 54.44°C (130°F) | 32.22°C (90°F) |
| Outdoor Maximum Reset | Setting | Delta Temp °C (°F) | 0°C (32°F) | 11.11°C (52°F) | 2.78°C (37°F) |
| Cooling Design Delta Temperature | Setting | Delta Temp °C (°F) | 1°C (33.8°F) | 12°C (53.6°F) | 5.56°C (42°F) |
| **Pump Control Tab** | | | | | |
| Evaporator Water Flow Switch Status | Status | No Flow/Flow | | | |
| Evap Pump Inverter 1 Run Command | Status | Off/On | | | |
| Evaporator Pump 1 Command | Status | Off/On | | | |
| Evaporator Pump 2 Command | Status | Off/On | | | |
| Evap Pump Off Delay | Setting | Time (Minutes) | 0 min | 30 min | 1 min |
| Evap Flow Overdue Wait Time | Setting | Time (Seconds) | 300 s | 3600 s | 1200 s |
| High Evaporator Water Temp Setpoint | Setting | Temp °C (°F) | | | 55°C |
| Freeze Avoidance Tab | | | | | |
| Leaving Water Temp Cutout | Setting | Temp °C (°F) | -21.7°C (-7°F) | 4.4°C (40°F) | 3.3°C (38°F) |
| Low Refrigerant Temperature Cutout | Setting | Temp °C (°F) | -29.4°C (-21°F) | 2.22°C (36°F) | -3.3°C (26°F) |
| Evaporator Pump Freeze Avoidance | Setting | Disable/Enable | | | Enabled |
| Evap Pump Freeze Avoidance Adaptive Learning | Setting | Fixed/Adaptive | | | Enabled |
| Evap Pump Freeze Avoidance Time Constant | Setting | Time (minutes) | 2 min | 360 min | 10 min |
| Evap Pump Freeze Avoidance Temp Margin | Setting | Delta Temp °C | 0°C | 5°C | 2°C |

**Table 80.Unit view tabs - detail (continued)**

| Tab | Item Type | Units | Min Value | Max Value | Default Value |
|---|---|---|---|---|---|
| **Starts and Hours Tab** | | | | | |
| Chiller Running Time | Status | Time (Sec to HH:MM) | | | |
| Compressor 1A Starts | Status | Starts | | | |
| Compressor 1A Running Time | Status | Time (Sec to HH:MM) | | | |
| Compressor 1B Starts | Status | Starts | | | |
| Compressor 1B Running Time | Status | Time (Sec to HH:MM) | | | |
| Compressor 1C Starts | Status | Starts | | | |
| Compressor 1C Running Time | Status | Time (Sec to HH:MM) | | | |
| Compressor 2A Starts | Status | Starts | | | |
| Compressor 2A Running Time | Status | Time (Sec to HH:MM) | | | |
| Compressor 2B Starts | Status | Starts | | | |
| Compressor 2B Running Time | Status | Time (Sec to HH:MM) | | | |
| Compressor 2C Starts | Status | Starts | | | |
| Compressor 2C Running Time | Status | Time (Sec to HH:MM) | | | |
| Evaporator Water Pump 1 Starts | Status | Starts | | | |
| Evaporator Water Pump 1 Running Time | Status | Time (Sec to HH:MM) | | | |
| Evaporator Water Pump 1 Starts | Status | Starts | | | |
| Evaporator Water Pump 1 Running Time | Status | Time (Sec to HH:MM) | | | |
| Heat Recovery Tab | | | | | |
| Partial heat recovery (PHR) Fan Control | Setting | Disable/Enable | | | |
| PHR Leaving Water Temperature Setpoint | Setting | Temp (°C) | | | |
| PHR Leaving Water Temperature Adjustment | Setting | Delta Temp (°C) | | | |
| Generic Monitoring Tab | | | | | |
| Generic Temp Sensor | Status | Temp (°C) | | | |
| Generic Pressure Sensor | Status | Pressure (kPa) | | | |
| Generic Analog Monitor | Status | Current (mA) | | | |
| Generic Low Volt Monitor | Setting | Open/Closed | | | |
| Generic High Volt Monitor | Setting | Off/On | | | |

The items that can be modified show up in white. The items that cannot be modified show up in gray.

**Figure 72. Fields in white**

Unit | Circuit 1 | Circuit 2 | Unit Manual Overrides

| System | Control Point Name | Value | Unit |
|---|---|---|---|
| Chiller | Evaporator Entering Water Temperature | ----- | °F |
| Chiller | Evaporator Leaving Water Temperature | ----- | °F |
| Chiller | Evaporator Water Flow Switch Status | No Flow | |
| Chiller | Outdoor Air Temperature | ----- | °F |
| Chiller | Active Chilled Water Setpoint | 44.0 | °F |
| Chiller | Active Chilled Water Setpoint Source | Front Panel | |
| Chiller | Front Panel Chilled Water Setpoint | 44.0 | °F |
| Chiller | Filtered Chilled Water Setpoint | 44.0 | °F |
| Chiller | Active Demand Limit Setpoint | 100 | % |
| Chiller | Active Demand Limit Setpoint Source | Front Panel | |
| Chiller | Front Panel Demand Limit Setpoint | 100 | % |
| Chiller | Manual Override Exists | False | |
| Chiller | Setpoint Source | BAS/Ext/FP | |

To change the setpoint enter a new value for the setpoint into the text field.

**Figure 73. Change setpoint**

If the entered value is outside the given range, the background turns red.

**Figure 74. Change out of range**

If the value entered is not valid, an error message will display and the change will not occur

**Figure 75. Setpoint change failed**

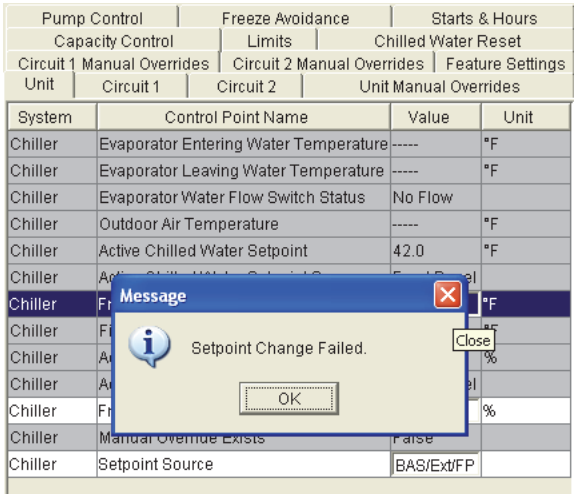


**Figure 76. Diagnostic view**

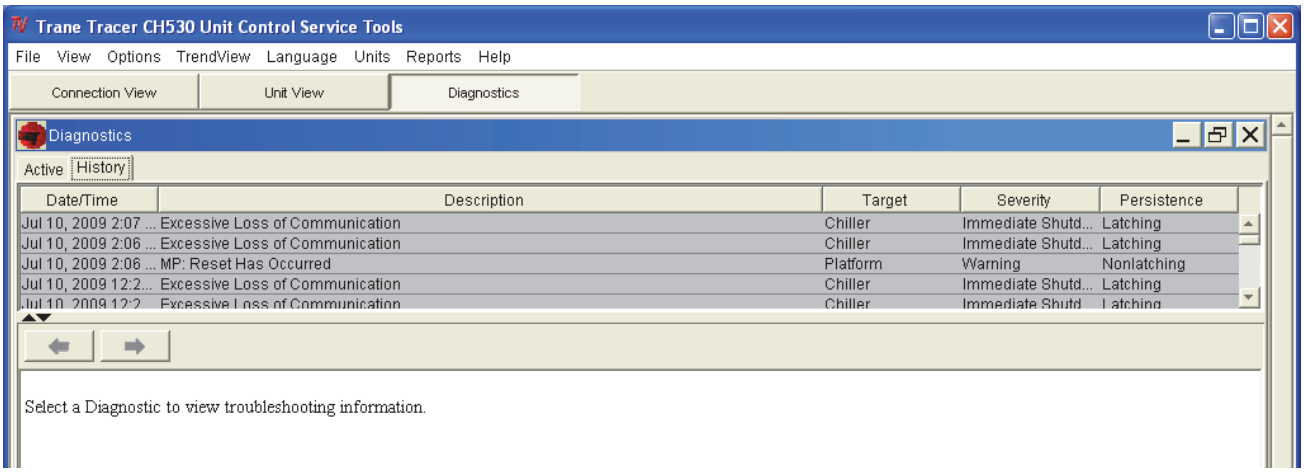


## Diagnostics View

This window lists the active and inactive (history) diagnostics. There can be up to 60 diagnostics, both active and historic. For example, if there were 5 active diagnostics, the possible number of historic diagnostics would be 55. You can also reset active diagnostics here, (i.e., transfer active diagnostics to history and allow the chiller to regenerate any active diagnostics).

Resetting the active diagnostics may cause the chiller to resume operation.

The Active and History diagnostics have separate tabs. A button to reset the active diagnostics displays when either tab is selected.

## Configuration View

This view is under the CH530 tab and displays the active configuration and allows you to make changes to the unit configuration. Configuration View allows you to define the chiller's components, ratings, and configuration settings. These are all values that determine the required installed devices, and how the chiller application is run in the main processor. For example, a user may set an option to be installed with Configuration View, which will require devices to be bound using Binding View. And when the main processor runs the chiller application, the appropriate steps are taken to monitor required inputs and control necessary outputs.

Any changes made in the Configuration View, on any of the tabs, will modify the chiller configuration when you click on the Load Configuration button (located at the base of the window). The Load Configuration button uploads the new configuration settings into the main processor.

Selecting the Undo All button will undo any configuration setting changes made during the present TechView™ connection and since the last time the Load Configuration button was selected.

**Figure 77. Configuration view — CH530 tab**

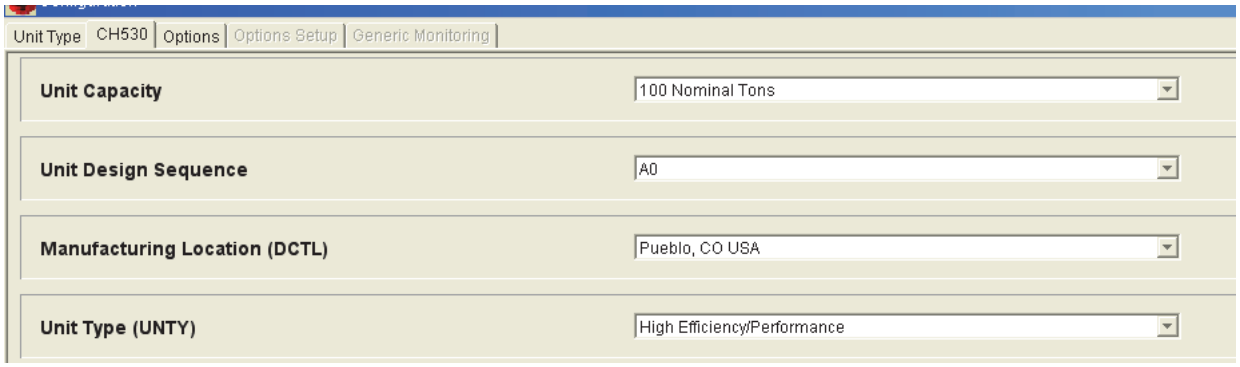


**Table 81.Configuration view items - CH530 tab**

| Item | Description |
|---|---|
| Basic Product Line | CGAM - Air-Cooled Scroll Packaged Chiller |
| Unit Capacity | 020 Nominal Tons<br>023 Nominal Tons (TAI, EPL only)<br>026 Nominal Tons<br>030 Nominal Tons<br>035 Nominal Tons<br>039 Nominal Tons (EPL only)<br>040 Nominal Tons<br>045 Nominal Tons (EPL only)<br>046 Nominal Tons (TAI, EPL only)<br>052 Nominal Tons<br>060 Nominal Tons<br>070 Nominal Tons<br>080 Nominal Tons<br>090 Nominal Tons<br>100 Nominal Tons<br>110 Nominal Tons<br>120 Nominal Tons |
| Unit Design Sequence | Factory Assigned |
| Manufacturing Location | Epinal, France<br>Pueblo, USA<br>Taicang, China<br>Curitiba, Brazil |
| Unit Type | Standard Efficiency/Performance (EPL only)<br>High Efficiency/Performance |
| Sound Package | High Duty (EPL and TAI only)<br>Standard Noise<br>Low Noise |
| Supply Power Frequency | 60 Hz<br>50 Hz |
| Unit Application | Standard Ambient (EPL and TAI only)<br>Low Ambient (EPL and TAI only)<br>High Ambient (EPL and TAI only)<br>Wide Ambient |
| Heat Recovery | No Heat Recovery<br>Partial Heat Recovery w/ Fan Control<br>Partial Heat Recovery w/o Fan Control (EPL and TAI only) |
| Evaporator Pump Control | No Pump Flow Control<br>Single Pump Fixed Speed (TAI, EPL only)<br>Single Pump Variable Speed (TAI, EPL only)<br>Dual Pump Fixed Speed (TAI, EPL only)<br>Dual Pump Variable Speed |

A couple of additional tabs in Configuration View allow you to change other unit configuration options using the Options tab and the Options Setup tab. The features that are installed on the Options Tab will control what is displayed on the Options Setup tab.

**Figure 78. Configuration view — options tab**

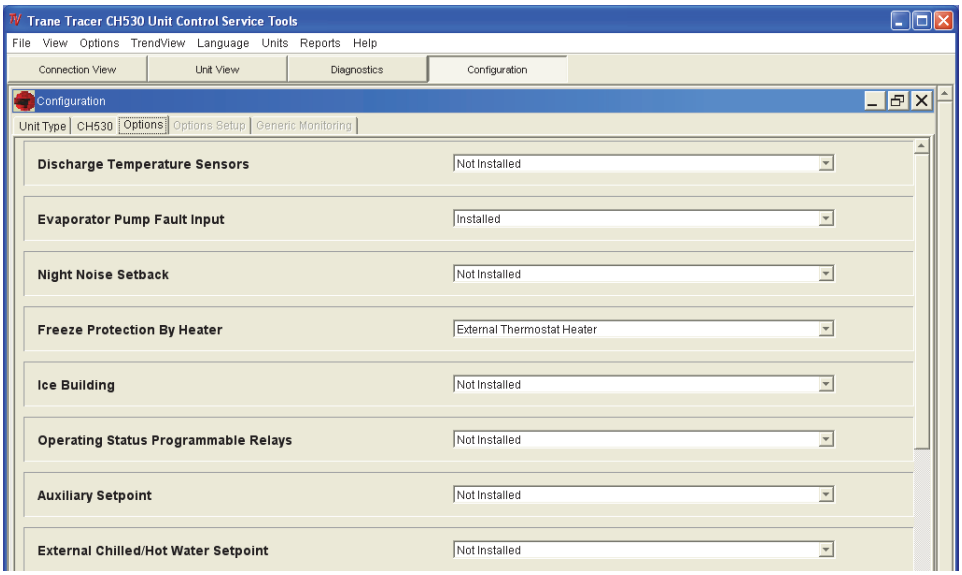


**Figure 79. Configuration view — options setup tab**

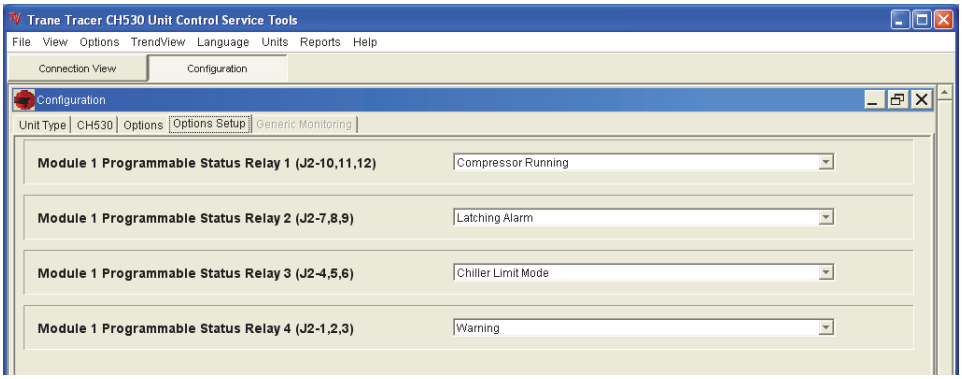


## Software View

Software view allows you to verify the version of chiller software currently running on the DynaView™ and download a new version of chiller software to the DynaView™.

You can also add up to two available languages to load into the DynaView™. Loading an alternate language file allows the DynaView™ to display its text in the selected alternate language, English will always be available

**Figure 80. Software view**

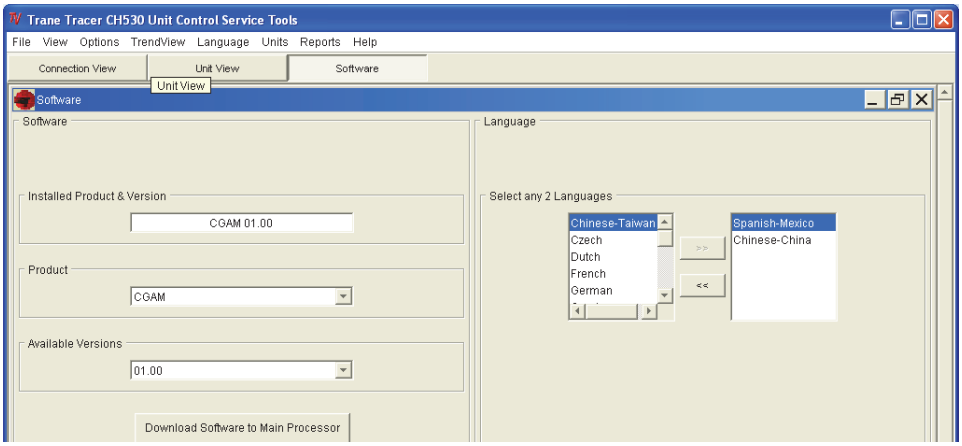

## Binding View

Binding View allows you to assess the status of the network and all the devices connected as a whole, or the status of individual devices by using status icons and function buttons.

Binding View is essentially a table depicting what devices and options are actually discovered on the network bus (and their communication status) versus what is required to support the configuration defined by the feature codes and categories.

Binding View allows you to add, remove, modify, verify, and reassign devices and options in order to match the configuration requirements.

Whenever a device is installed, it must be correctly configured to communicate and to function as intended. This process is called binding. Some features of Binding View are intended to serve a second purpose; that is diagnosing problems with communication among the devices.

**Figure 81. Binding view**

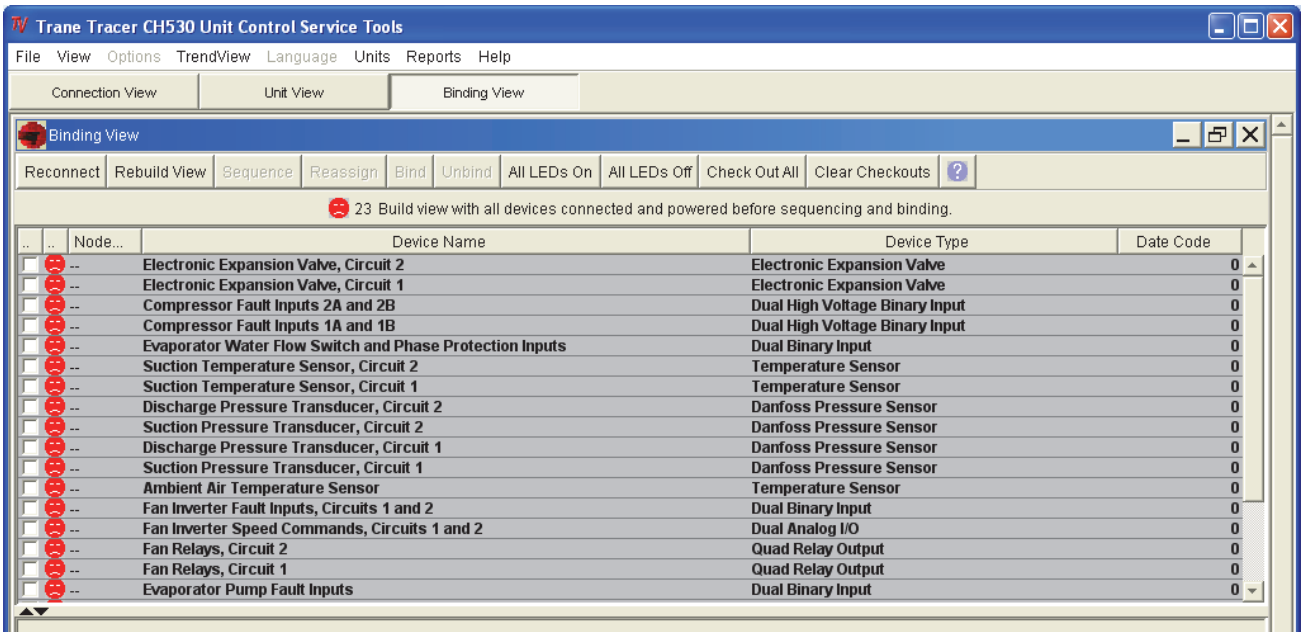


### Replacing or Adding Devices

If a device is communicating but incorrectly configured, it might not be necessary to replace it. If the problem with the device is related to communication, attempt to rebind it, and if the device becomes correctly configured, it will then communicate properly.

If a device that needs to be replaced is still communicating, it should be unbound. Otherwise, it will be necessary to rebuild the CH530 network image for Binding View to discover that it has been removed. An unbound device stops communicating and allows a new device to be bound in its place.

It is good practice to turn the power off while detaching and attaching devices to the CH530 network. Be sure to keep power on the service tool computer. After power is restored to the CH530 network, the reconnect function in Binding View restores communication with the network. If the service tool computer is turned off, you must restart TechView™ and Binding View.

If a device is not communicating, the binding function displays a window to request manual selection of the device to be bound. Previously-selected devices are deselected when the function starts. When manual selection is confirmed, exactly one device must be selected; if it is the correct type, it is bound. If the desired device cannot be selected or if multiple devices are accidentally selected, you can close the manual selection window by clicking on No and repeat the bind function.

### Integrated Rapid Restart

Chiller controls are designed and engineered for Rapid Restart. Advanced features and functionality are built into the chillers. Bringing a chiller back online rapidly after a loss of power is critical to operations in mission critical environments, which demand the highest levels of reliability.

Under optimal conditions it can restart in as little as # seconds with an uninterrupted power supply (UPS) backing up the unit controls and # seconds without a UPS. 80 percent cooling load can be achieved in less than 2.5 minutes after power restoration.

# Pre-Start Checkout

Upon completion of installation, complete the CGAM Installation Completion Check Sheet and Request for Trane Service checklist in chapter “Log and Check Sheet,” p. 147.

***Important:*** *Start-up must be performed by Trane or an agent of Trane specifically authorized to perform start-up and warranty of Trane products. Contractor shall provide Trane (or an agent of Trane specifically authorized to perform start-up) with notice of the scheduled start-up at least two weeks prior to the scheduled start-up.*

# Start-Up and Shutdown

***Important:*** *Initial unit commissioning start-up must be performed by Trane or an agent of Trane specifically authorized to perform start-up and warranty of Trane products. Contractor shall provide Trane (or an agent of Trane specifically authorized to perform start-up) with notice of the scheduled start-up at least two weeks prior to the scheduled start-up.*

## Start-Up

**NOTICE:**

**Equipment Damage!**

**Ensure that the oil sump heaters are connected properly and are operating properly for a minimum of 24 hours before starting. Failure to do so may result in equipment damage.**

**NOTICE:**

**Equipment Damage!**

**Snow, ice, or debris build up on fans could cause excessive imbalance and equipment damage. Clear fans of build up prior to machine startup.**

If required, once the system has been operating for approximately 30 minutes and has become stabilized, complete the remaining start-up procedures, as follows:

1. Check the evaporator refrigerant pressure and the condenser refrigerant pressure under Refrigerant Report on the CH530 TechView™.

***Note:*** *The pressures are referenced to sea level (14.6960 psia). This value is adjustable in TechView.*

2. Check the EXV sight glasses after sufficient time has elapsed to stabilize the chiller. The refrigerant flow past the sight glasses should be clear. Bubbles in the refrigerant indicate either low refrigerant charge or excessive pressure drop in the liquid line or a stuck open expansion valve. A restriction in the line can sometimes be identified by a noticeable temperature differential between the two sides of the restriction. Frost will often form on the line at this point. Proper refrigerant charges are shown in General Data tables.

***Important:*** *A clear sight glass alone does not mean that the system is properly charged. Also check system sub-cooling, liquid level control and unit operating pressures.*

If chiller is limited by any limiting conditions, contact local Trane service organization for more information.

## Seasonal Unit Start-Up Procedure

1. Verify/close all drain valves.
2. Service the auxiliary equipment according to the start-up/ maintenance instructions provided by the respective equipment manufacturers.
3. Remove all air from the system (including each pass). Close the vents in the evaporator chilled water circuits.
4. Open all valves in evaporator chilled water circuits.
5. If evaporator was previously drained, vent and fill evaporator and chilled water circuit. When all air is removed (including each pass), install vent plugs in evaporator water boxes

**NOTICE:**

**Equipment Damage!**

**Ensure that the oil sump heaters have been operating for a minimum of 24 hours before starting. Failure to do so may result in equipment damage.**

## Seasonal Unit Shutdown

1. Perform normal unit stop sequence using <Stop> key.

***Note:*** *Starter disconnect switch must remain closed to provide power to compressor oil sump heaters.*

2. Verify that compressor oil sump heaters are installed tightly around compressor. Energize and verify heaters are operational using a temperature probe. See Table 82, p. 125. Install jumper across thermostat and verify current flow.

**NOTICE:**

**Equipment Damage!**

**If the chiller evaporator or evaporator water piping is drained of water, the evaporator immersion heater must be de-energized. Failure to de-energize the heater will cause it to burn out.**

**Table 82. Freeze protection heater summary[a]**

| Heater | Thermostat | Jumper | Heater Description | Heaters |
|---|---|---|---|---|
| Evap and Water Pipe Heaters | 5S1 | 5X1-2 to 5X1-3 | Evaporator | 5E1 |
| | | | Evap Entering Water | 5E4, 5E18 |
| | | | Evap Leaving Water | 5E5, 5E19 |
| | | | Water Pump Piping | 5E6, 5E14 |
| | | | Partial Heat Recovery (optional) | 5E10,5E11, 5E16, 5E17 |
| | | | Expansion Tank (included with optional pump package) | 5E7 |
| Pump Package (optional) | 5S2 | 5X2-1 to 5X2-2 | Water Pump Piping | 5E13, 5E15 |
| Buffer Tank (optional) | 5S3 | Across thermostat | Buffer Tank | 5E2, 5E8, 5E12, 5E13 |

(a) Not all heaters are present on all unit configurations. See schematics and component locations in CGAM-SVE01*-EN.

***Note:*** *See "Ambient Freeze Avoidance," p. 69 for more information.*

3. Once the unit is secured, perform maintenance identified in "Maintenance," p. 128.

# Sequence of Operation

This section will provide basic information on chiller operation for common events. With microelectronic controls, ladder diagrams cannot show today's complex logic, as the control functions are much more involved than older pneumatic or solid state controls.

Adaptive control algorithms can also complicate the exact sequence of operations. This section illustrates common control sequences.

## Software Operation Overview

The Software Operation Overview shown in Figure 82 is a diagram of the five possible software states. This diagram can be though of as a state chart, with the arrows and arrow text depicting the transitions between states.

- The text in the circles is the visible top level operating mode displayed on DynaView Main tab.
- The shading of each software state circle corresponds to the shading on the time lines that show the state the chiller is in.

There are five generic states that the software can be in:

- Power Up
- Stopped
- Starting
- Running
- Stopping

**Figure 82. Chiller state chart**

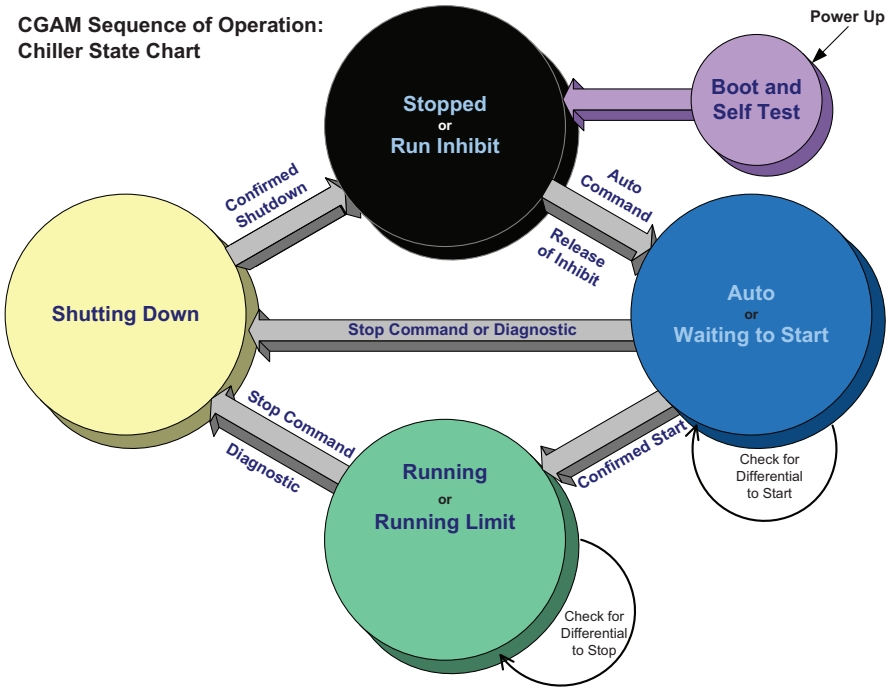

## Power Up

The Power up chart shows the respective DynaView screens during a power up of the main processor. This process takes from 30 to 45 seconds depending on the number of installed Options. On all power ups, the software model will always transition through the 'Stopped' Software state independent of the last mode. If the last mode before power down was 'Auto', the transition from 'Stopped' to 'Starting' occurs, but it is not apparent to the user.

**Figure 83. Power up**

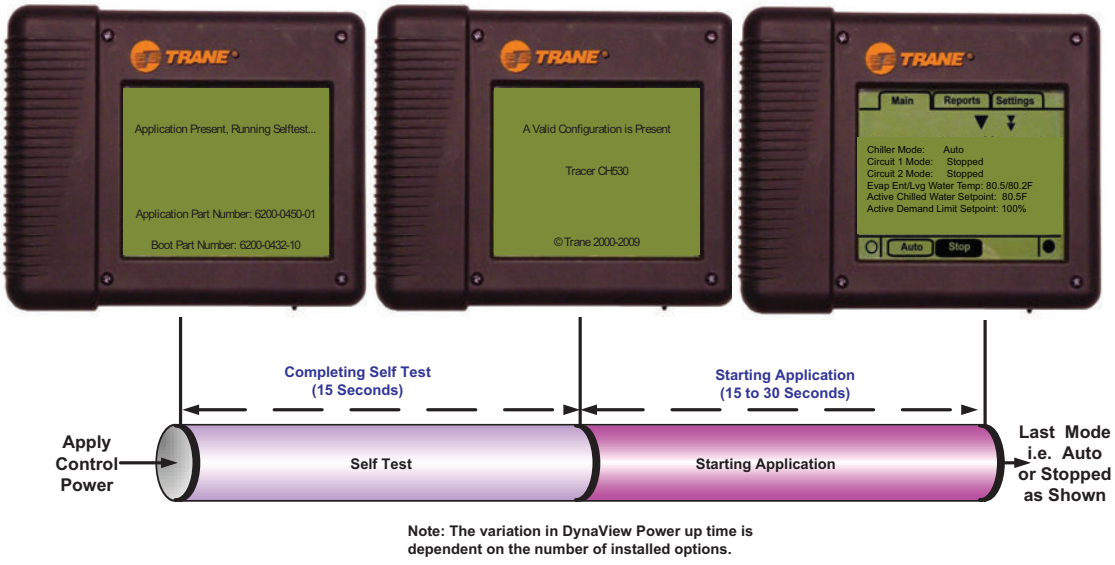


Note: The variation in DynaView Power up time is dependent on the number of installed options.

## Power Up to Starting

Power up to starting diagram shows timing from a power up event to energizing the first compressor. The shortest allowable time would be under the following conditions:

- No motor restart inhibit
- Evaporator Water flow occurs quickly with pump on command
- Power up Start Delay setpoint set to 0 minutes
- Need to cool (differential to start) already exists

The above conditions would allow for a minimum power up to starting the first compressor time of about 85 seconds, depending on options installed.

**Figure 84. Power up to starting**

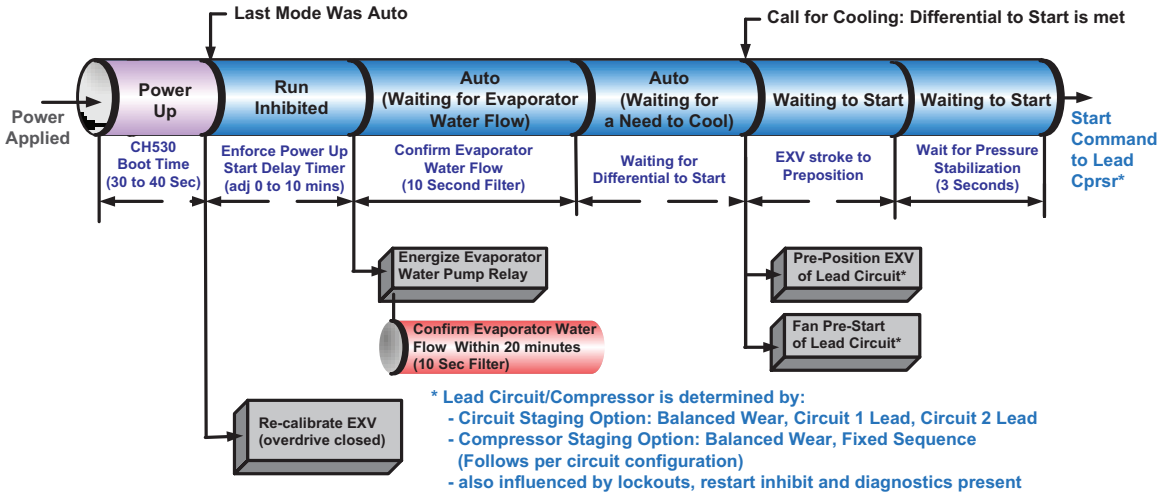

## Stopped to Starting

The stopped to starting diagram shows the timing from a stopped mode to energizing the compressor. The shortest allowable time would be under the following conditions:

- No motor restart inhibit
- Evaporator Water flow occurs quickly with pump on command
- Need to cool (differential to start) already exists.

The above conditions would allow the compressor to start in about 35 seconds.

**Figure 85. Stopped to starting**

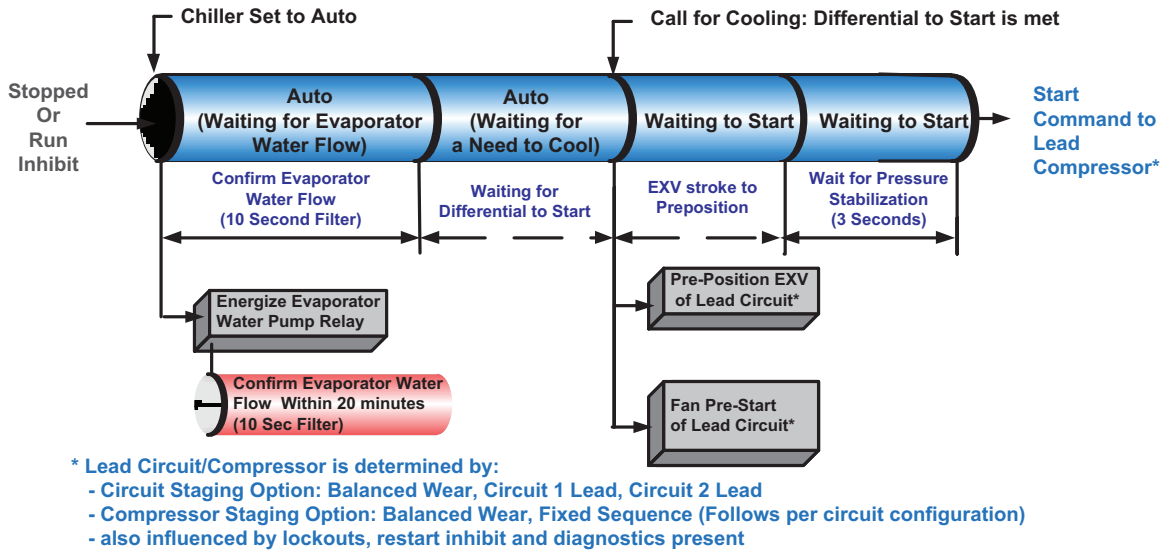


## Normal Shutdown to Stopped

Figure 86 shows transition from Running through a Normal (friendly) Shutdown. Dashed lines on top attempt to show final mode if you enter stop via various inputs.

**Figure 86. Normal shutdown to stopped or run inhibit**

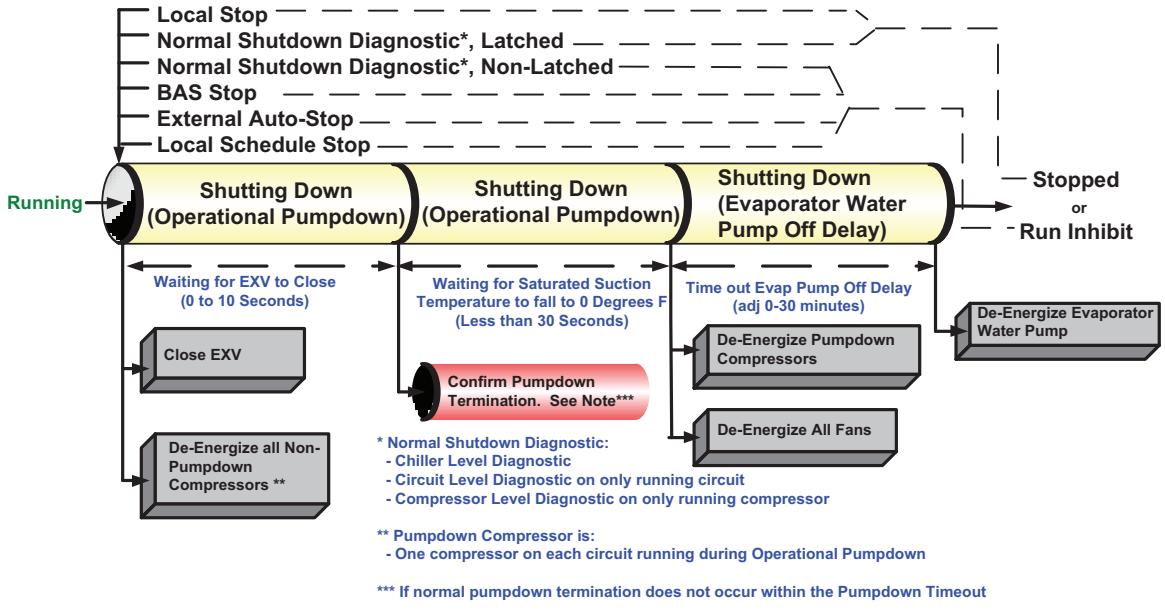

# Maintenance

**⚠WARNING**

**Hazardous Voltage - Pressurized Burning Fluid!**

**Failure to follow all electrical safety precautions could result in death or serious injury.**

**Compressors on 110 and 120 ton, extra efficiency units, have strong permanent magnet motors that have the capability to generate voltage during situations when the refrigerant charge is being migrated. This potential will be present at the motor terminals and at the load side of compressor contactors.**

**Before removing compressor terminal box cover for servicing, or servicing power side of control panel, CLOSE COMPRESSOR DISCHARGE SERVICE VALVE and disconnect all electric power including remote disconnects. Follow lockout/tagout procedures to ensure the power cannot be inadvertently energized.**

**The compressor contains hot, pressurized refrigerant. Motor terminals act as a seal against this refrigerant. Care should be taken when servicing NOT to damage or loosen motor terminals.**

**Do not operate compressor without terminal box cover in place.**

**⚠WARNING**

**Hazardous Voltage!**

**Failure to disconnect power before servicing could result in death or serious injury. Disconnect all electric power, including remote disconnects before servicing. Follow proper lockout/tagout procedures to ensure the power can not be inadvertently energized.**

Perform all maintenance procedures and inspection at the recommended intervals. This will prolong the life of the chiller and minimize the possibility of malfunctions.

Use an “Operator’s Log” to record the unit’s operating history. The log serves as a valuable diagnostic tool for service personnel. By observing trends in operating conditions, an operator can anticipate and prevent problem situations before they occur.

If the unit is not operating properly during maintenance inspections, see “Diagnostics,” p. 133.

## Recommended Maintenance

### Weekly

Verify that compressor oil sump heaters are connected tightly around the compressor.

After the chiller has been operating for approximately 30 minutes and the system has stabilized, check the operating pressures and temperatures and complete the following checks:

Check the evaporator and condenser refrigerant pressures in the Refrigerant Report menu of the CH530 display. Pressures are referenced at sea level (14.6960 psia).

Check the electronic expansion valve sight glasses.

***Note:*** *The electronic expansion valve is commanded closed at unit shutdown and if the unit is off, there will be no refrigerant flow through the sight glasses. Only when a circuit is running will refrigerant flow be present.*

The refrigerant flow through the sight glasses should be clear. Bubbles in the refrigerant indicate either low refrigerant charge or excessive pressure drop in the liquid line. A restriction in the line can sometimes be identified by a noticeable temperature differential between the two sides of the restriction. Frost may often form on the liquid line at this point. Correct refrigerant charges are shown in the General Data Tables.

***Important:*** *A clear sight glass alone does not mean that the system is properly charged. Also check the system superheat, subcooling and unit operating pressures.*

For more information, see “Refrigerant and Oil Charge Management,” p. 129.

### Monthly

1. Complete all weekly maintenance procedures.
2. Measure and record the evaporator superheat.
3. Measure and record the system subcooling.

### Annual

1. Complete all weekly and monthly maintenance checks.
2. Check the oil level and refrigerant charge. Routine changing of oil is not required.
3. Have a qualified laboratory perform a compressor oil analysis to determine system moisture content and acid level. This analysis is a valuable diagnostic tool.
4. Contact a qualified service provider to leak test the chiller, check operating and safety controls, and to inspect electrical components for proper operation. Leak testing my be accomplished using soap solution or with electronic or ultrasonic leak detectors.
5. Inspect all piping components for leaks and damage. Clean all water strainers.

**NOTICE:**

**Equipment Damage!**

**If the CGAM chiller evaporator or evaporator water piping is drained of water, the evaporator immersion heater must be de-energized. Failure to de-energize the heater will cause it to burn out.**

6. Clean and repaint any components that show corrosion.
7. Clean the condenser coils per "Condenser Maintenance," p. 130

**⚠WARNING**

**Rotating Components!**

**Failure to disconnect power before servicing could result in rotating components cutting and slashing technician which could result in death or serious injury. Disconnect all electric power, including remote disconnects before servicing. Follow proper lockout/tagout procedures to ensure the power can not be inadvertently energized.**

8. Clean the condenser fans. Check the fan assemblies for proper clearance in the fan shroud openings and for motor shaft misalignment or abnormal end-play, vibration and noise.
9. Manually rotate the condenser fans to ensure that there is proper clearance on the fan shroud openings.Inspect the entire system for unusual conditions.

# Refrigerant and Oil Charge Management

Proper oil and refrigerant charge is essential for proper unit operation, unit performance, and environmental protection. Only trained and licensed service personnel should service the chiller.

Table 83 lists baseline measurements for CGAM units running at AHRI standard operating conditions. If chiller measurements vary significantly from values listed below, problems may exist with refrigerant and oil charge levels. Contact your local Trane office.

***Note:*** *Low temperature applications units will have values that vary from* Table 83*. Contact your local Trane office for more information.*

**Table 83. Typical CGAM baselines (AHRI conditions)**

| Measurement | Baseline |
|---|---|
| Evaporator Pressure | 120 psig |
| Evaporator Approach | 5-10°F |
| EXV Position | 40-50% open |
| Evaporator delta T | 10°F |
| Evaporator Superheat | 12°F |
| Condenser Pressure | 420-440 psia |
| Condensing Approach Temperature | 25°F |

**Table 83. Typical CGAM baselines (AHRI conditions)**

| Measurement | Baseline |
|---|---|
| Subcooling | 15-20°F |
| Compressor Discharge Temperature | 63° or more |
| Compressor Suction Temperature | 20° or more |
| Compressor RLA | 100% |

# Lubrication System

## Oil Level

Oil should also be visible in the sight glass when the compressor is running. When operating, each compressor in a tandem or trio set may have a different oil level.

To check compressor oil level, refer to the label near the compressor sight glass. The compressor(s) must be off. Wait three minutes. With tandem or triple compressors the oil level will equalize after shutdown. Compressor oil level should be clearly visible within the sight glass when the compressors are off.

***Important:*** *If oil level is low, contact your local Trane office. Verify that ONLY Trane OIL00080 is used.*

## Oil Testing

Use Trane Oil Testing Kit KIT06815 only for testing lubricating oil in the Model CGAM chiller. Note that the POE oil used in this product is very hygroscopic and easily absorbs and retains moisture. The acceptable moisture content is less than 100 ppm and acceptable acid level is less than 0.5 TAN. Note that refrigerant and moisture is very difficult to remove from this oil using vacuum. Also note that once the seal on a container of POE oil is opened, the oil must be used.

In the event of a compressor failure, always test the oil with an acid test kit to determine whether the compressor failure was mechanical or electrical. This is important because it dictates correct cleanup procedure.

# Condenser Maintenance

## Microchannel Condensers

For proper operation, microchannel condenser coils must be cleaned regularly. Eliminate pollution and other residual material help to extend the life of the coils and the unit.

Regular coil maintenance, including annual cleaning, enhances the unit's operating efficiency by minimizing compressor head pressure and amperage draw. The condenser coil should be cleaned at minimum once each year, or more if the unit is located in a "dirty" or corrosive environment.

### Microchannel Condenser Coil Cleaning

**NOTICE:**

**Equipment Damage!**

**Do not use detergents to clean coils. Use clean water only. Use of detergents on coils could cause damage to coils.**

Cleaning with cleansers or detergents is strongly discouraged due to the all-aluminum construction. Water should prove sufficient. Any breach in the tubes can result in refrigerant leaks.

**⚠WARNING**

**Hazardous Voltage!**

**Disconnect all electric power, including remote disconnects before servicing. Follow proper lockout/tagout procedures to ensure the power can not be inadvertently energized. Failure to disconnect power before servicing could result in death or serious injury.**

1. Disconnect Power to the unit.

**⚠WARNING**

**No Step Surface!**

**Failure to follow instruction below could result in death or serious injury. Do not walk on the sheet metal drain pan. Walking on the drain pan could cause the supporting metal to collapse, resulting in the operator/technician to fall.**

***Important:*** *Bridging between the main supports required before attempting to enter the unit. Bridging may consist of multiple 2 by 12 boards or sheet metal grating.*

2. Use a soft brush or vacuum to remove base debris or surface loaded fibers from both sides of the coil.

***Note:*** *When possible, clean the coil from the opposite direction of normal air flow (inside of unit out) to push debris out.*

3. Using a sprayer and water ONLY, clean the coil following the guidelines below.
   a. Sprayer nozzle pressure should not exceed 580 psi.
   b. The maximum source angle should not exceed 25° to the face of the coil. See Figure 87. For best results spray the microchannel perpendicular to face of the coil.
   c. Spray nozzle should be approximately 1"-3" from the coil surface.
   d. Use at least a 15º fan type of spray nozzle.

**Figure 87. Sprayer source angle**

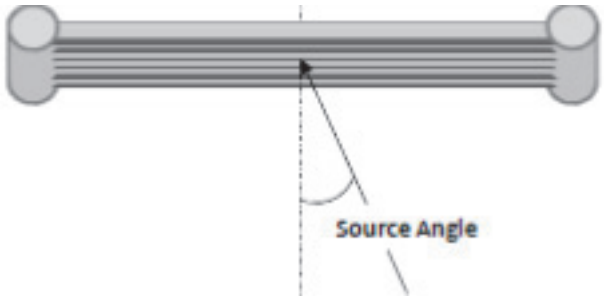


***Note:*** *To avoid damage from the spray wand contacting the coil, make sure the 90º attachment does not come in contact with the tube and fin as abrasion to the coil could result.*

### Repair/Replacement of Microchannel Coil

Microchannel coils are considerably more robust in design than tube and fin condenser coils, however they are not indestructible. When damage or a leak occurs, contact your local Trane office.

## Round Tube Plate Fin Condensers

### RTPF Condenser Coil Cleaning

**⚠WARNING**

**Hazardous Chemicals!**

**Coil cleaning agents can be either acidic or highly alkaline and can burn severely if contact with skin occurs. Handle chemical carefully and avoid contact with skin. ALWAYS wear Personal Protective Equipment (PPE) including goggles or face shield, chemical resistant gloves, boots, apron or suit as required. For personal safety refer to the cleaning agent manufacturer's Materials Safety Data Sheet and follow all recommended safe handling practices. Failure to follow all safety instructions could result in death or serious injury.**

Clean the condenser coils at least once a year or more frequently if the unit is in a "dirty" environment. A clean condenser coil will help to maintain chiller operating efficiency.

Follow the detergent manufacturer's instructions to avoid damaging the condenser coils.

To clean the condenser coils use a soft brush and a sprayer such as a garden pump type or a high-pressure type. A high quality detergent such as Trane Coil Cleaner (Part No. CHM-00255) is recommended.

See RTAC-SVG01*-EN for maintenance and cleaning procedures.

***Note:*** *If detergent mixture is strongly alkaline (pH value greater than 8.5, an inhibitor must be added).*

# Evaporator Maintenance

**NOTICE:**

## Equipment Damage!

**The factory-installed immersion heater must be de-energized if the BPHE evaporator is drained of water for any reason. Failure to de-energize the immersion heater will cause it to burn out.**

The Trane Model CGAM liquid chiller uses a brazed plate heat exchanger (BPHE) evaporator with factory-installed electronic flow switch (IFM efector) that is positioned in the evaporator water pipe. The evaporator inlet also includes a factory-installed immersion heater for freeze protection and a water strainer that must be kept in place to keep debris out of the evaporator.

***Note:*** *Strainer maintenance is critical to proper operation and reliability. Any particles larger than 1mm entering the BPHE evaporator may cause the evaporator to fail, requiring replacement.*

Acceptable BPHE evaporator water flow rate is 1.5 to 3.6 GPM per nominal unit ton capacity. To maintain 54-44°F in/out chilled water temperatures, the nominal water flow rate is 2.4 GPM/ton.

Minimum water flow rate must be maintained to avoid laminar flow, potential evaporator freezing, scaling and poor temperature control. The microprocessor and capacity control algorithms are designed to take a 10 percent change in water flow rate per minute while maintaining a ±2°F (1.1°C) leaving water temperature control accuracy. The chiller tolerates up to 30 percent per minute water flow variation as long as the flow is equal to or greater than minimum flow requirements.

Maximum water flow is 18 feet per second. Flow rates greater than this will cause excessive erosion.

The BPHE evaporator is difficult to clean should it become plugged with debris. Indications of a plugged BPHE evaporator include “wet” suction due to lack of heat exchange, loss of superheat control, depressed discharge superheat, compressor oil dilution and/or starvation and premature compressor failure.

## Water Strainer Maintenance

For units with optional pump package, the factory-installed water strainer is a Y-type design with a cylindrical sieve.

**Figure 88. Y type strainer — units with optional pump package**

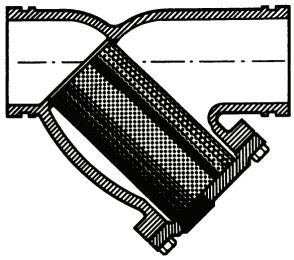

An in-line strainer with a V-shaped sieve is used for units that do not have factory-installed pump package option.

**Figure 89. In-line strainer — units without optional pump package**

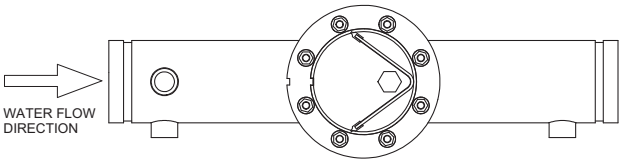


The strainer is equipped with a blow-down port. The strainer is a 16 mesh (approximately 1 mm) material.

For maximum efficiency, a differential pressure gauge installed across the inlet and outlet will indicate pressure loss due to clogging and may be used as a guide to determine when cleaning is required. The taps for the pressure gauges are included as standard from the factory.

Normally when differential pressure reaches 5-10psi, the screen must be cleaned. The strainer is equipped with a blow-down port on the cover plate. To clean open and flush out until any sediment is removed.

# Pump Package Maintenance

## Rust Prevention

Pumps not immediately placed into service, or removed from service and stored, must be properly prepared to prevent excessive rusting.

- Pump port protection plates must not be removed until the pump is ready to connect to the piping.
- Rotate the shaft periodically (at least monthly) to keep rotating element free and bearings fully functional.
- For long term storage (3 months or longer), prevent internal rust buildup and possibility of freezing by performing the following steps:
  - Remove the plugs at the top and bottom of the casing.
  - If water is to be drained:
    - Disconnect evaporator and piping heaters.
    - Drain or blow out all water.
  - As an optional step, it is acceptable to rustproof or pack the casing with moisture absorbing material and cover the flanges.

When returning pumps to service

- Remove drying agent from the pump, if used.
- Reinstall plugs at the top and bottom of the casing.
- If water had been drained:
  - Refill water.
  - Reconnect evaporator and piping heaters.

# Diagnostics

## Explanatory Comments

### Diagnostic Text:

Black text is intended for use on TechView. It has no intrinsic length limit. It should contain few or no abbreviations.

***Blue (italicized)*** *text is intended for use on DynaView. It has a 40 character length limit for English and other European languages, based on 8 pixel character width (DynaView's display is 320 pixels wide). The text should be abbreviated as necessary to meet the length limit. Trane standard abbreviations or ASME standard abbreviations (ASME Y14.38-1999 or later) should be used wherever possible.*

**Orange (underlined) text is intended for use on LCI-C. LCI-C has a 28 character length limit for English and other European languages, based on one character per byte (LCI-C diagnostic text has a 28 byte limit). It should be abbreviated as necessary to meet the length limit. Trane standard abbreviations or ASME standard abbreviations (ASME Y14.38-1999 or later) should be used wherever possible. "Comm:" is the standard abbreviation for "Comm Loss:" in order to leave enough space for the rest of the diagnostic text.**

**Legacy Hex Code:** Three digit hexadecimal code used on all past products to uniquely identify diagnostics.

**Diagnostic Name and Source:** Name of Diagnostic and its source. Note that this is the exact text used in the User Interface and/or Service Tool displays.

The following codes were added to cover the unmapped diagnostics:

- 6B6: Unknown Chiller Diagnostic
- 6B7: Unknown Compressor Diagnostic

**Affects Target:** Defines the "target" or what is affected by the diagnostic. Usually either the entire **Chiller**, or a particular **component** is affected by the diagnostic (the same one as the source), but in special cases functions are modified or disabled by the diagnostic. **None** implies that there is no direct affect to the chiller, sub components or functional operation.

**Severity:** Defines the severity of the above effect. **Immediate** means immediate shutdown of the effected portion, **Normal** means normal or friendly shutdown of the effected portion, **Special Mode** means a special mode of operation (limp along) is invoked, but without shutdown, and **Warning** means an Informational Note or Warning is generated.

**Persistence**: Defines whether or not the diagnostic and its effects are to be manually reset (Latched), or can be either manually or automatically reset (Nonlatched).

**Active Modes [Inactive Modes]:** States the modes or periods of operation that the diagnostic is active in and, as necessary, those modes or periods that it is specifically not active in as an exception to the active modes. The inactive modes are enclosed in brackets, [ ]. Note that the modes used in this column are internal and not generally annunciated to any of the formal mode displays

**Criteria**: Quantitatively defines the criteria used in generating the diagnostic and, if nonlatching, the criteria for auto reset. If more explanation is necessary a hot link to the Functional Specification is used.

**Reset Level**: Defines the lowest level of manual diagnostic reset command which can clear the diagnostic. The manual diagnostic reset levels in order of priority are: **Local** and **Remote**. A diagnostic that has a reset level of Local, can only be reset by a local diagnostic reset command, but not by the lower priority remote Reset command whereas a diagnostic listed as Remote reset can be reset by either.

**Help Text:** Provides for a brief description of what kind of problems might cause this diagnostic to occur. Both control system component related problems as well as chiller application related problems are addressed (as can possibly be anticipated). These help messages will be updated with accumulated field experience with the chillers.

# Main Processor Diagnostic

**Table 84. Main processor diagnostics**

| Diagnostic Name | Affects | Severity | Persist-ence | Active Modes [Inactive Modes] | Criteria | Reset Level |
|---|---|---|---|---|---|---|
| BAS Communication Lost<br>*BAS Communication Lost*<br>BAS Communication Lost | Chiller | Special | NonLatch | All | Refer to the LCI-C interface for details on the LonTalk® interface. The BCI-C interface contains details on the BACnet® interface. Refer to setpoint arbitration to determine how setpoints and operating modes may be affected by the comm loss. | Remote |
| BAS Failed to Establish Communication<br>*BAS Failed to Establish Communication*<br>BAS Failed to Establish Comm | Chiller | Special | NonLatch | At power-up | Refer to the LCI-C interface for details on the LonTalk® interface. The BCI-C interface contains details on the BACnet® interface. Refer to setpoint arbitration to determine how setpoints and operating modes may be affected. | Remote |
| Check Clock<br>*Check Clock*<br>Check Clock | Platform | Warning | Latch | All | The real time clock had detected loss of its oscillator at some time in the past. Check / replace battery? This diagnostic can be effectively cleared only by writing a new value to the chiller's time clock using the TechView™ or DynaView™ "set chiller time" functions. | Remote |
| Chilled Water Flow (Entering Water Temp)<br>*Chilled Water Flow (Entering Water Temp)*<br>Chilled Wtr Flow (Ent Temp) | Chiller | Immediate | Latching | Any Ckt(s) Energized [No Ckt(s)Energized] | The entering evaporator water temp fell below the leaving evaporator water temperature by more than 3°F for 100°F-sec while at least one compressor was running. | Remote |
| Circuit Pumpdown Terminated<br>*Circuit Pumpdown Terminated*<br>Circuit Pumpdown Terminated | Circuit | Warning | Latching | Operational/ Service Pumpdown [All Except Operational and Service Pumpdown] | Operational Pumpdown or Service Pumpdown procedure did not terminate normally by reaching the termination pressure within the allotted time. | Remote |
| Compressor Fault<br>*Compressor Fault*<br>Compressor Fault | Cprsr | Immediate | NonLatch | All | The compressor fault switch input is open. | Local |
| Compressor Fault Lockout<br>*Compressor Fault Lockout*<br>Compressor Fault Lockout | Cprsr | Immediate | Latch | All | The compressor fault switch input remained open for more than 35 minutes. Five compressor fault diagnostics have occurred within the last 210 minutes. | Local |
| Emergency Stop<br>*Emergency Stop*<br>Emergency Stop | Chiller | Immediate | Latch | All | Emergency Stop input is open. | Local |
| Evaporator Pump 1 Starts/Hours Modified<br>*Evaporator Pump 1 Starts/Hours Modified*<br>Evap Pmp Starts/Hrs Modified | Chiller | Warning | NonLatch | All | A counter for evaporator pump 1 starts or hours has been modified by TechView. This diagnostic is immediately and automatically cleared and thus can only be seen in the historic diagnostic list. | NA |
| Evaporator Pump 2 Starts/Hours Modified<br>*Evaporator Pump 2 Starts/Hours Modified*<br>Evap Pmp Starts/Hrs Modified | Chiller | Warning | NonLatch | All | A counter for evaporator pump 2 starts or hours has been modified by TechView. This diagnostic is immediately and automatically cleared and thus can only be seen in the historic diagnostic list. | NA |
| Evaporator Water Flow Lost<br>*Evaporator Water Flow Lost*<br>Evap Water Flow Lost | Chiller | Immediate and Special Action | NonLatch | All | After the pump request was activated, water flow was established and then lost. Special action is to keep the evap pump request active in a diagnostic override mode. | Remote |
| Evaporator Water Flow Lost – Pump 1<br>*Evaporator Water Flow Lost – Pump 1*<br>Evap Water Flow Lost | Chiller | Warning and Special Action | NonLatch | All | For dual evaporator pump configurations only. Evaporator Water Flow Lost diagnostic occurred while Pump 1 was the selected pump. | Remote |
| Evaporator Water Flow Lost – Pump 2<br>*Evaporator Water Flow Lost – Pump 2*<br>Evap Water Flow Lost | Chiller | Warning and Special Action | NonLatch | All | For dual evaporator pump configurations only. Evaporator Water Flow Lost diagnostic occurred while Pump 2 was the selected pump. | Remote |
| Evaporator Water Flow Lost Lockout<br>*Evaporator Water Flow Lost Lockout*<br>Evap Water Flow Lost Lockout | Chiller | Immediate | Latch | All | Four (4) water flow loss events occurred in a moving 4 day time window. Corrective action is needed to identify and eliminate the cause. | Local |

**Table 84. Main processor diagnostics (continued)**

| Diagnostic Name | Affects | Severity | Persist-ence | Active Modes [Inactive Modes] | Criteria | Reset Level |
|---|---|---|---|---|---|---|
| Evaporator Water Flow Overdue<br>*Evaporator Water Flow Overdue*<br>Evap Water Flow Overdue | Chiller | Immediate and Special Action | NonLatch | All | After the pump request was activated, the evaporator water flow overdue wait time elapsed before water flow was established. Special action is to keep the evap pump request active in a diagnostic override mode. | Remote |
| Evaporator Water Flow Overdue – Pump 1<br>*Evaporator Water Flow Overdue – Pump 1*<br>Evap Water Flow Overdue | Chiller | Warning and Special Action | NonLatch | All | For dual evaporator pump configurations only. Evaporator Water Flow Overdue diagnostic occurred while Pump 1 was the selected pump. | Remote |
| Evaporator Water Flow Overdue – Pump 2<br>*Evaporator Water Flow Overdue – Pump 2*<br>Evap Water Flow Overdue | Chiller | Warning and Special Action | NonLatch | All | For dual evaporator pump configurations only. Evaporator Water Flow Overdue diagnostic occurred while Pump 2 was the selected pump. | Remote |
| Evaporator Water Flow Too Low<br>*Evaporator Water Flow Too Low*<br>Evap Water Flow Too Low | Chiller | Immediate | Latch | Cooling Mode [Not Cooling Mode] | Refrigerant side to water side heat balance indicates that water flow has dropped below allowable manufacturer limits. | Local |
| External Chilled/Hot Water Setpoint<br>*External Chilled/Hot Water Setpoint*<br>Ext Chilled/Hot Water Setpt | Chiller | Warning | NonLatch | All | a. Function Not “Enabled”: no diagnostics. B. “Enabled “: Out-Of-Range Low or Hi or bad LLID, set diagnostic, default CWS/HWS to next level of priority (e.g. Front Panel SetPoint). This Warning diagnostic will automatically reset if the input returns to the normal range. | Remote |
| External Demand Limit Setpoint<br>*External Demand Limit Setpoint*<br>External Demand Limit Setpt | Chiller | Warning | NonLatch | All | a. Function Not “Enabled”: no diagnostics. B. “Enabled “: Out-Of-Range Low or Hi or bad LLID, set diagnostic, default DLS to next level of priority (e.g. Front Panel SetPoint). This Warning diagnostic will automatically reset if the input returns to the normal range. | Remote |
| Fan Fault<br>*Fan Fault*<br>Fan Fault | Circuit | Warning | Latch | All | The fan deck is indicating a fault. | Local |
| Fan Inverter Fault<br>*Fan Inverter Fault*<br>Fan Inverter Fault | Circuit | Warning | NonLatch | Ckt Energized [Ckt Not Energized] All | The fan inverter fault input is ignored for the first 5 seconds of start up to allow variable speed drives to power up. | Local |
| Fault Detected: Evaporator Water Pump 1<br>*Fault Detected: Evaporator Water Pump 1*<br>Fault: Evap Water Pump | Chiller | Normal Immediate or Warning and Special Action | NonLatch | All | For systems with no evaporator pump, a single evaporator pump, or a single inverter driving dual evaporator pumps, an immediate shutdown shall be performed.For multiple pump systems, detection of a pump fault will generally cause pump control to switch to the redundant pump. For single inverter, dual pump configuration, switching to the redundant pump can only happen after the fault is cleared. For systems with no evaporator pump or a single evaporator pump, a normal shutdown shall be performed. For multiple pump systems, detection of a pump fault will generally cause pump control to switch to the redundant pump. | Remote |
| Fault Detected: Evaporator Water Pump 2<br>*Fault Detected: Evaporator Water Pump 2*<br>Fault: Evap Water Pump | Chiller | Normal Immediate or Warning and Special Action | NonLatch | All | For systems with no evaporator pump, a single evaporator pump, or a single inverter driving dual evaporator pumps, an immediate shutdown shall be performed. For multiple pump systems, detection of a pump fault will generally cause pump control to switch to the redundant pump. For single inverter, dual pump configuration, switching to the redundant pump can only happen after the fault is cleared. For systems with no evaporator pump or a single evaporator pump, a normal shutdown shall be performed. For multiple pump systems, detection of a pump fault will generally cause pump control to switch to the redundant pump. | Remote |

**Table 84. Main processor diagnostics (continued)**

| Diagnostic Name | Affects | Severity | Persist-ence | Active Modes [Inactive Modes] | Criteria | Reset Level |
|---|---|---|---|---|---|---|
| High Compressor Pressure Differential<br>*High Compressor Pressure Differential*<br>High Cprsr Press Diff | Circuit | Immediate | Latch | Ckt Energized [Ckt Not Energized or Operational Pumpdown] | Compressor involute pressure differential exceeded allowable limits. | Local |
| High Discharge Refrigerant Pressure<br>*High Discharge Refrigerant Pressure*<br>High Discharge Rfgt Press | Circuit | Immediate | Latch | All | Discharge pressure exceeded the high pressure cutout setpoint + 100 kPa. Likely cause: failed or incorrectly set high pressure cutout switch. Prevents release of refrigerant through relief valve. | Local |
| High Discharge Temperature<br>*High Discharge Temperature*<br>High Discharge Temperature | Circuit | Immediate | NonLatch | Ckt Energized [Ckt Not Energized] | The discharge temperature exceeded the limits for the compressor. | Local |
| High Discharge Temperature Lockout<br>*High Discharge Temperature Lockout*<br>High Discharge Temp Lockout | Circuit | Immediate | Latch | All | 5 high discharge temperature diagnostics occurred over 210 minutes. | |
| High Evaporator Water Temperature<br>*High Evaporator Water Temperature*<br>High Evap Water Temperature | Chiller | Info and Special Action | NonLatch | Only effective if either<br>1) Evaporator Water Flow Overdue,<br>2) Evaporator Water Flow Lost,<br>3) Low Evap Water Temp: Unit Off, diagnostic is active. | The leaving water temperature exceeded the high evap water temp setting (TV service menu settable– default 55.0°C (131°F)) for 15 continuous seconds. The evaporator water pump relay will be de-energized to stop the pump, but only if it is running due to one of the diagnostics listed on the left. The diagnostic will auto reset and the pump will return to normal control when the temperature falls 2.778°C (5°F) below the trip setting. The primary purpose is to stop the evaporator water pump and its associated pump heat from causing excessive water-side temperatures and water-side pressures when the unit is not running but the evap pump is on due to either Evaporator Water Flow Overdue, Evaporator Water Flow Lost, or Low Evap Water Temp – Unit Off diagnostics. This diagnostic will not auto clear solely due to the clearing of the enabling diagnostic.<br>*at unit installation, especially reversible units, high evap water temp setting will need to be written. The value should be approximately 65.556°C (150°F) for heat pumps | Remote |
| High Pressure Cutout<br>*High Pressure Cutout*<br>High Pressure Cutout | Circuit | Immediate | Latch | All | The high pressure cutout switch recognized a high pressure. | Local |
| High Suction Refrigerant Pressure<br>*High Suction Refrigerant Pressure*<br>High Suction Rfgt Press | Chiller | Immediate | NonLatch | All | Any circuit's suction pressure has risen above 95% of the high pressure cutout setting. The evaporator water pump relay will be de-energized to stop the pump regardless of why the pump is running. The diagnostic will auto reset and the pump will return to normal control when all circuits' suction pressures fall below 85% of the high pressure cutout setting.<br>The primary purpose is to stop the evaporator water pump and its associated pump heat from causing refrigerant side pressures close to the relief valve setting when the chiller is not running, such as could occur with Evaporator Water Flow Overdue, Evaporator Water Flow Lost, or Low Evap Water Temp – Unit Off diagnostics. This condition is unlikely unless a discharge isolation valve is installed and closed. | Remote |

**Table 84. Main processor diagnostics (continued)**

| Diagnostic Name | Affects | Severity | Persist-ence | Active Modes [Inactive Modes] | Criteria | Reset Level |
|---|---|---|---|---|---|---|
| Inverted Water Temp (Heating)<br>*Inverted Water Temp (Heating)*<br>Inverted Wtr Temp (Heating) | Chiller | Immediate | Latching | Unit energized and all ckts' reversing valves in heating direction [Unit de-energized or any ckt's reversing valve in cooling direction] | The leaving evaporator water temp fell below the entering evaporator water temperature by more than 3°F for 100°F-sec. There is a 60 second ignore time after the condition to enable the diagnostic is met. During the ignore time, the temperature error is not integrated. | Remote |
| LCI-C Software Mismatch: Use BAS Tool<br>*LCI-C Software Mismatch: Use BAS Tool*<br>LCI-C Software: Use BAS Tool | Chiller | Warning | NonLatch | All | LCI-C Neuron software and LCI-C IPC3 software do not match. Load new LCI-C Neuron software using LonTalk® service tool. | Remote |
| Loss of Charge<br>*Loss of Charge*<br>Loss of Charge | Circuit | Immediate | Latch | Ckt Energized [Ckt Not Energized] | This feature is active on cooling-only units, not on heat pumps (even during cooling mode). The circuit must have EXV superheat control. See algorithm specification for details. | Local |
| Low Differential Refrigerant Pressure<br>*Low Differential Refrigerant Pressure*<br>Low Differential Rfgt Press | Circuit | Normal | Latch | Ckt Energized [Ckt Not Energized] | The system differential pressure for the respective circuit was below 90 psid for more than 4000 psid-sec, with a 2.5 minute ignore time from the start of the circuit. | Local |
| Low Discharge Saturated Temperature<br>*Low Discharge Saturated Temperature*<br>Low Discharge Sat Temp | Circuit | Normal | Latch | Ckt Energized [Ckt Not Energized] | The discharge saturated temperature for the respective circuit was below 20 °C for more than 3750 °C-sec, with a 10 minute ignore time from the start of the circuit. Integration starts after the ignore time is completed. | Local |
| Low Evap Leaving Water Temp: Unit Off<br>*Low Evap Leaving Water Temp: Unit Off*<br>Low Evap Leav Wtr Temp: Off | Chiller or Circuit | Warning and Special Action | NonLatch | Unit in Stop Mode, or in Auto Mode and No Ckt(s) Energized [Any Ckt Energized] | The leaving chilled water temperature fell below the leaving water temp cutout setting for 30 degree F seconds while the Chiller is in the Stop mode, or in Auto mode with no compressors running. Energize Evap Water pump Relay until diagnostic auto resets, then return to normal evap pump control. Automatic reset occurs when the temp rises 2°F above the cutout setting for 30 minutes. When this diagnostic is active AND Leaving Water Temperature sensor diagnostic (loss of comm or out of range) the Evap Water pump relay shall be de-energized.<br>If evaporator protection temperature sensors are installed, the effect is on the appropriate circuit. Else, the effect is on the chiller. | Remote |
| Low Evap Leaving Water Temp: Unit On<br>*Low Evap Leaving Water Temp: Unit On*<br>Low Evap Leav Wtr Temp: On | Chiller or Circuit | Immediate and Special Action | NonLatch | Any Ckt[s] Energized [No Ckt(s) Energizd] | The chilled water temp. fell below the cutout setpoint for 30 degree F Seconds while a compressor was running. Automatic reset occurs when the temperature rises 2 °F above the cutout setting for 2 minutes. This diagnostic shall not de-energize the Evaporator Water Pump Output. If this diagnostic is active the Low Evap Leaving Water Temp: Unit Off diagnostic shall be suppressed.<br>If evaporator protection temperature sensors are installed, the effect is on the appropriate circuit. Else, the effect is on the chiller. | Remote |
| Low Pressure Cutout<br>*Low Pressure Cutout*<br>Low Pressure Cutout | Circuit | Immediate | Latch | All | The suction refrigerant pressure fell below the low pressure cutout trip point. | Local |
| Low Refrigerant Temperature<br>*Low Refrigerant Temperature*<br>Low Refrigerant Temperature | Circuit | Immediate | Latch | Circuit Energized [Service Pumpdown, Operational Pumpdown] | The suction saturated refrigerant temperature dropped below the Low Refrigerant Temperature Cutout Setpoint for 16.67°C-seconds (30°F-seconds). | Local |
| Low Suction Superheat<br>*Low Suction Superheat*<br>Low Suction Superheat | Circuit | Immediate | Latch | Ckt Energized [Ckt Not Energized] | Measured suction superheat stays below 2.22 °C for one continuous minute, with a 1 minute ignore time fro m the start of the circuit.<br>Suction Superheat = suction temp – sat. suction temp. | Local |

**Table 84. Main processor diagnostics (continued)**

| Diagnostic Name | Affects | Severity | Persist-ence | Active Modes [Inactive Modes] | Criteria | Reset Level |
|---|---|---|---|---|---|---|
| MP: Could not Store Starts and Hours<br>*MP: Could not Store Starts and Hours*<br>MP: Starts and Hours Failure | Platform | Warning | Latch | All | MP has determined there was an error with the previous power down store. Starts and Hours may have been lost for the last 24 hours. | Remote |
| MP: Non-Volatile Block Test Error<br>*MP: Non-Volatile Block Test Error*<br>MP: NV Block Test Error | Platform | Warning | Latch | All | MP has determined there was an error with a block in the Non-Volatile memory. Check settings. | |
| MP: Non-Volatile Memory Reformatted<br>*MP: Non-Volatile Memory Reformatted*<br>MP: NV Memory Reformatted | Platform | Warning | Latch | All | MP has determined there was an error in a sector of the Non-Volatile memory and it was reformatted. Check settings. | Remote |
| MP: Reset Has Occurred<br>*MP: Reset Has Occurred*<br>MP: Reset Has Occurred | Chiller | Warning | NonLatch | All | The main processor has successfully come out of a reset and built its application. A reset may have been due to a power up, installing new software or configuration. This diagnostic is immediately and automatically cleared and thus can only be seen in the historic diagnostic list. | NA |
| No Partial Heat Recovery<br>*No Partial Heat Recovery*<br>No Partial Heat Recovery | Circuit | Warning | NonLatch | Ckt Energized [Ckt Not Energized] | PHR entering water temperature is greater than the discharge temperature by 1.11°C for 30 continuous minutes. | |
| No Total Heat Recovery<br>*No Total Heat Recovery*<br>No Total Heat Recovery | Heat Recovery | Normal Warning | NonLatch | Unit energized and THR control enabled [Unit de-energized or THR disabled] | This diagnostic is only effective if all the following requirements are met: 1) Unit is running. 2) THR Control is enabled. 3) THR entering water temperature is less than 4°C, or discharge temperature integral is greater than Discharge Temperature Integral Limit in all the energized circuits.<br>It shall be de-activated when any one of the following requirement is met: 1) THR entering water temperature is greater than 5°C., and the discharge saturated temperature is greater than minimum discharge saturated temperature in at least one energized circuit, see Total Heat Recovery Control Algorithm specification for details. 2) THR entering water temperature is invalid (comm loss or sensor diagnostic). 3) Total Heat Recovery Control disabled. 4) No compressor energized. | Remote |
| Phase Protection Fault<br>*Phase Protection Fault*<br>Phase Protection Fault | Chiller | Immediate | NonLatch | All | Phase protection module recognized a phase loss or phase reversal of the line power. Reset automatically after module recognizes good power for 30 continuous seconds. | Local |
| Power Factor Correction Fault<br>*Power Factor Correction Fault*<br>Pwr Factor Correction Fault | Chiller | Warning | Latch | All | Power Factor Correction module has signaled a fault condition. | Remote |
| Software Error 1001: Call Trane Service<br>*Software Error 1001: Call Trane Service*<br>Software Error 1001 | All functions | Immediate | Latch | All | A software monitor has detected a condition in which there was a continuous 1 minute period of compressor operation, with no Evaporator water flow. The presence of this software error message suggests an internal software problem has been detected. The events that led up to this failure, if known, should be recorded and transmitted to Trane Controls Engineering. | Local |
| Software Error 1002: Call Trane Service<br>*Software Error 1002: Call Trane Service*<br>Software Error 1002 | All functions | Immediate | Latch | All | A software monitor has detected a condition in which there was a continuous 1 minute period of compressor operation, with a misaligned state machine. Reported if state chart misalignment occurred inferred form the Capacity Control, Circuit, or Compressor State Machines being in *Stopped state* or *Inactive state* while a compressor was operating and this condition existed for at least 1 minute. The presence of this software error message suggests an internal software problem has been detected. The events that led up to this failure, if known, should be recorded and transmitted to Trane Controls Engineering. | Local |

**Table 84. Main processor diagnostics (continued)**

| Diagnostic Name | Affects | Severity | Persist-ence | Active Modes [Inactive Modes] | Criteria | Reset Level |
|---|---|---|---|---|---|---|
| Software Error 1003: Call Trane Service<br>*Software Error 1003: Call Trane Service*<br>Software Error 1003 | All functions | Immediate | Latch | All | A software monitor has detected a condition in which there was a continuous 1 minute period of compressor operation, with a misaligned state machine.<br>Reported if state chart misalignment occurred inferred from the Capacity Control, Circuit, or Compressor State Machines remaining in the Stopping state for more than 4 minutes with operating compressors. The presence of this software error message suggests an internal software problem has been detected. The events that led up to this failure, if known, should be recorded and transmitted to Trane Controls Engineering. | Local |
| Starts/Hours Modified<br>*Starts/Hours Modified*<br>Starts/Hours Modified | Cprsr | Warning | NonLatch | All | A counter for compressor starts or hours has been modified by TechView. This diagnostic is immediately and automatically cleared and thus can only be seen in the historic diagnostic list. | NA |
| Suction Temperature Too High<br>*Suction Temperature Too High*<br>Suction Temp Too High | Circuit | Immediate | Latch | Ckt Energized [Ckt Not Energized] | The suction temperature measurement is larger than the entering temperature by more than a threshold value for 5 continuous minutes. The threshold value is 3°C (5.4°F) for cooling-only units, and 5°C (9°F) for heat pumps. The entering temperature is the evaporator entering water temperature when the reversing valve is in the cooling direction, and the ambient air temperature when the reversing valve is in the heating direction. There is an ignore time of 2 minutes following circuit startup. The trip criteria is not evaluated (and time above the threshold is not counted) until the ignore time passes. | Local |
| Very Low Suction Pressure – Circuit 1<br>*Very Low Suction Pressure – Circuit 1*<br>Very Low Suct Press – Ckt 1 | Chiller | Immediate | Latch | All [circuit in manual lockout] | The circuit's suction pressure dropped below (Low Pressure Cutout Setpoint (kPa absolute) * 0.5) regardless of whether or not compressors are running on that circuit. This diagnostic was created to prevent compressor failures due to cross-binding by forcing an entire chiller shutdown. If a given circuit is locked out, the suction pressure transducer associated with it will be excluded from causing this diagnostic. | Local |
| Very Low Suction Pressure – Circuit 2<br>*Very Low Suction Pressure – Circuit 2*<br>Very Low Suct Press – Ckt 2 | Chiller | Immediate | Latch | All [circuit in manual lockout] | The circuit's suction pressure dropped below (Low Pressure Cutout Setpoint (kPa absolute) * 0.5) regardless of whether or not compressors are running on that circuit. This diagnostic was created to prevent compressor failures due to crossbinding by forcing an entire chiller shutdown. If a given circuit is locked out, the suction pressure transducer associated with it will be excluded from causing this diagnostic. | Local |

# Sensor Failure Diagnostics

***Notes:***

1. The following sensor failure diagnostics will not occur unless that input or output is required to be present by the particular configuration and installed options for the unit.
2. Sensor diagnostics are named by the Functional Name of the input or output that is no longer sending a valid value to the Main Processor, indicating a sensor failure. Some LLIDs may have more than one functional output associated with it. Refer to the unit's wiring diagrams to relate the occurrence of such sensor failure diagnostics back to the physical LLID boards that they have been assigned to (bound).

**Table 85. Sensor failure diagnostics**

| Diagnostic Name | Affects | Severity | Persist-ence | Active Modes [Inactive Modes] | Criteria | Reset Level |
|---|---|---|---|---|---|---|
| Discharge Pressure Transducer<br>*Discharge Pressure Transducer*<br>Discharge Pressure Xdcr | Circuit | Immediate | Latch | All | Bad Sensor or LLID | Remote |
| Discharge Temperature Sensor<br>*Discharge Temperature Sensor*<br>Discharge Temperature Sensor | Circuit | Immediate | Latch | All | Bad Sensor or LLID | Remote |
| Evaporator Entering Water Temp Sensor<br>*Evaporator Entering Water Temp Sensor*<br>Evap Ent Water Temp Sensor | Chiller | Normal | Latch | All | Bad Sensor or LLID. | Remote |
| Evaporator Leaving Water Temp Sensor<br>*Evaporator Leaving Water Temp Sensor*<br>Evap Leav Water Temp Sensor | Chiller | Normal | Latch | All | Bad Sensor or LLID | Remote |
| Heat Recovery Entering Water Temp Sensor<br>*Heat Recovery Entering Water Temp Sensor*<br>HR Entering Wtr Temp Sensor | Heat Recovery | Warning or Normal | Latch | All | Bad Sensor or LLID. Warning for Partial Heat Recovery. Normal shutdown for Total Heat Recovery. | Remote |
| Heat Recovery Leaving Water Temp Sensor<br>*Heat Recovery Leaving Water Temp Sensor*<br>HR Leaving Wtr Temp Sensor | Heat Recovery | Warning | Latch | All | Bad Sensor or LLID | Remote |
| Outdoor Air Temp Sensor<br>*Outdoor Air Temp Sensor*<br>Outdoor Air Temp Sensor | Chiller | Normal | Latch | All | Bad Sensor or LLID. | Remote |
| Suction Pressure Transducer<br>*Suction Pressure Transducer*<br>Suction Pressure Xdcr | Circuit | Immediate | Latch | All | Bad Sensor or LLID | Remote |
| Suction Temperature Sensor<br>*Suction Temperature Sensor*<br>Suction Temperature Sensor | Circuit | Immediate | Latch | All | Bad Sensor or LLID | Remote |

# Communication Diagnostics

***Note:*** *The following communication loss diagnostics will not occur unless that input or output is required to be present by the particular configuration and installed options for the chiller. 2. Communication diagnostics (with the exception of "Excessive Loss of Comm" are named by the Functional Name of the input or output that is no longer being heard from by the Main Processor. Many LLIDs, such as the Quad Relay LLID, have more than one functional output associated with it. A comm loss with such a multiple function board, will generate multiple diagnostics. Refer to the Chiller's wiring diagrams to relate the occurrence of multiple communication diagnostics back to the physical llid boards that they have been assigned to (bound).*

**Table 86. Communication diagnostics**

| Diagnostic Name | Affects | Severity | Persist-ence | Active Modes [In-active Modes] | Criteria | Reset Level |
|---|---|---|---|---|---|---|
| Comm Loss: Anti-Freeze Heater Relay<br>*Comm Loss: Anti-Freeze Heater Relay*<br>Comm: Anti-Freeze Heater Rly | Chiller | Warning and Special Action | Latch | All | Continual loss of communication between the MP and the Functional ID has occurred for a 35-40 second period. | Remote |
| Comm Loss: Auxiliary Setpoint Command<br>*Comm Loss: Auxiliary Setpoint Command*<br>Comm: Auxiliary Setpt Cmd | Chiller | Warning and Special Action | Latch | All | Continual loss of communication between the MP and the Functional ID has occurred for a 35-40 second period. Chiller shall discontinue use of the Auxiliary Setpoint and revert to the Chilled Water Setpoint based on setpoint arbitration | Remote |
| Comm Loss: Compressor Fault Input<br>*Comm Loss: Compressor Fault Input*<br>Comm: Compressor Fault Input | Cprsr | Immediate | Latch | All | Continual loss of communication between the MP and the Functional ID has occurred for a 35-40 second period. | Remote |
| Comm Loss: Compressor Run Command<br>*Comm Loss: Compressor Run Command*<br>Comm: Cprsr Run Command | Cprsr | Immediate | Latch | All | Continual loss of communication between the MP and the Functional ID has occurred for a 35-40 second period. | Remote |
| Comm Loss: Cooling EXV<br>*Comm Loss: Cooling EXV*<br>Comm: Cooling EXV | Circuit | Immediate | Latch | All | Continual loss of communication between the MP and the Functional ID has occurred for a 35-40 second period. | Remote |
| Comm Loss: Discharge Pressure Transducer<br>*Comm Loss: Discharge Pressure Transducer*<br>Comm: Discharge Press Xdcr | Circuit | Immediate | Latch | All | Continual loss of communication between the MP and the Functional ID has occurred for a 35-40 second period. | Remote |
| Comm Loss: Discharge Temperature Sensor<br>*Comm Loss: Discharge Temperature Sensor*<br>Comm: Discharge Temp Sensor | Circuit | Immediate | Latch | All | Continual loss of communication between the MP and the Functional ID has occurred for a 35-40 second period. | Remote |
| Comm Loss: Electronic Expansion Valve<br>*Comm Loss: Electronic Expansion Valve*<br>Comm: EXV | Circuit | Immediate | Latch | All | Continual loss of communication between the MP and the Functional ID has occurred for a 35-40 second period. | Remote |
| Comm Loss: Emergency Stop<br>*Comm Loss: Emergency Stop*<br>Comm: Emergency Stop | Chiller | Normal | Latch | All | Continual loss of communication between the MP and the Functional ID has occurred for a 35-40 second period. | Remote |
| Comm Loss: Evap Entering Water Temp<br>*Comm Loss: Evap Entering Water Temp*<br>Comm: Evap Ent Water Temp | Chiller | Normal | Latch | All | Continual loss of communication between the MP and the Functional ID has occurred for a 35-40 second period. | Remote |
| Comm Loss: Evap Leaving Water Temp<br>*Comm Loss: Evap Leaving Water Temp*<br>Comm: Evap Leav Water Temp | Chiller | Normal | Latch | All | Continual loss of communication between the MP and the Functional ID has occurred for a 35-40 second period. | Remote |
| Comm Loss: Evap Pump Inverter 1 Fault Input<br>*Comm Loss: Evap Pump Inv 1 Fault Input*<br>Comm: Evap Pmp Inv 1 Flt Inp | Chiller | Normal | Latch | All | Continual loss of communication between the MP and the Functional ID has occurred for a 35-40 second period. | Remote |
| Comm Loss: Evap Pump Inverter 1 Frequency Feedback<br>*Comm Loss: Evap Pump Inv 1 Freq Feedback*<br>Comm: Evap Pmp Inv 1 Freq | Chiller | Normal | Latch | All | Continual loss of communication between the MP and the Functional ID has occurred for a 35-40 second period. | Remote |
| Comm Loss: Evap Pump Inverter 1 Run Command<br>*Comm Loss: Evap Pump Inverter 1 Run Cmd*<br>Comm: Evap Pmp Inv 1 Run Cmd | Chiller | Normal | Latch | All | Continual loss of communication between the MP and the Functional ID has occurred for a 35-40 second period. | Remote |
| Comm Loss: Evaporator Pump 1 Fault Input<br>*Comm Loss: Evaporator Pump 1 Fault Input*<br>Comm: Evap Pump Fault Input | Chiller | Normal | Latch | All | Continual loss of communication between the MP and the Functional ID has occurred for a 35-40 second period. | Remote |

**Table 86. Communication diagnostics (continued)**

| Diagnostic Name | Affects | Severity | Persist-ence | Active Modes [In-active Modes] | Criteria | Reset Level |
|---|---|---|---|---|---|---|
| Comm Loss: Evaporator Pump 2 Fault Input<br>*Comm Loss: Evaporator Pump 2 Fault Input*<br>Comm: Evap Pump Fault Input | Chiller | Normal | Latch | All | Continual loss of communication between the MP and the Functional ID has occurred for a 35-40 second period. | Remote |
| Comm Loss: Evaporator Water Flow Switch<br>*Comm Loss: Evaporator Water Flow Switch*<br>Comm: Evap Water Flow Sw | Chiller | Immediate | Latch | All | Continual loss of communication between the MP and the Functional ID has occurred for a 35-40 second period. | Remote |
| Comm Loss: Evaporator Water Pump 1 Relay<br>*Comm Loss: Evaporator Water Pump 1 Relay*<br>Comm: Evap Water Pump Relay | Chiller | Normal | Latch | All | Continual loss of communication between the MP and the Functional ID has occurred for a 35-40 second period. | Remote |
| Comm Loss: Evaporator Water Pump 2 Relay<br>*Comm Loss: Evaporator Water Pump 2 Relay*<br>Comm: Evap Water Pump Relay | Chiller | Normal | Latch | All | Continual loss of communication between the MP and the Functional ID has occurred for a 35-40 second period. | Remote |
| Comm Loss: Ext Chilled/Hot Wtr Setpoint<br>*Comm Loss: Ext Chilled/Hot Wtr Setpoint*<br>Comm: Ext Chil/Hot Wtr Setpt | Chiller | Warning and Special Action | Latch | All | Continual loss of communication between the MP and the Functional ID has occurred for a 35-40 second period. Chiller shall discontinue use of the External Chilled/Hot Water Setpoint source and revert to the next higher priority for setpoint arbitration | Remote |
| Comm Loss: Ext Demand Limit Setpoint<br>*Comm Loss: Ext Demand Limit Setpoint*<br>Comm: Ext Demand Limit Setpt | Chiller | Warning and Special Action | Latch | All | Continual loss of communication between the MP and the Functional ID has occurred for a 35-40 second period. Chiller shall discontinue use of the External Demand Limit Setpoint source and revert to the next higher priority for setpoint arbitration | Remote |
| Comm Loss: External Auto/Stop<br>*Comm Loss: External Auto/Stop*<br>Comm: External Auto/Stop | Chiller | Normal | Latch | All | Continual loss of communication between the MP and the Functional ID has occurred for a 35-40 second period. | Remote |
| Comm Loss: External Heat Recovery Input<br>*Comm Loss: External Heat Recovery Input*<br>Comm: Ext Heat Recovery Inp | Heat Recovery | Warning and Special Action | Latch | All | Continual loss of communication between the MP and the Functional ID has occurred for a 35-40 second period. External input is excluded from arbitration logic per standard arbitration rules. | Remote |
| Comm Loss: External Ice Building Control Input<br>*Comm Loss: Ext Ice Building Ctrl Input*<br>Comm: Ext Ice Building Ctrl | Chiller | Warning | Latch | All | Continual loss of communication between the MP and the Functional ID has occurred for a 35-40 second period. Chiller shall revert to normal (non-ice building) mode regardless of last state. | Remote |
| Comm Loss: External Night Noise Setback Input<br>*Comm Loss: Ext Night Noise Setback Input*<br>Comm: Ext Night Noise Inp | Chiller | Warning and Special Action | Latch | All | Continual loss of communication between the MP and the Functional ID has occurred for a 35-40 second period. External input is excluded from arbitration logic per standard arbitration rules. | Remote |
| Comm Loss: Fan Control Relays<br>*Comm Loss: Fan Control Relays*<br>Comm: Fan Control Relays | Circuit | Immediate | Latch | All | Continual loss of communication between the MP and the Functional ID has occurred for a 35-40 second period. | Remote |
| Comm Loss: Fan Fault<br>*Comm Loss: Fan Fault*<br>Comm: Fan Fault | Circuit | Warning | Latch | All | Continual loss of communication between the MP and the Functional ID has occurred for a 35-40 second period. | Remote |
| Comm Loss: Fan Inverter Fault<br>*Comm Loss: Fan Inverter Fault*<br>Comm: Fan Inverter Fault | Circuit | Warning and Special Action | Latch | All | Continual loss of communication between the MP and the Functional ID has occurred for a 35-40 second period. Revert to fixed-speed fan algorithm using remaining fans. | Remote |
| Comm Loss: Fan Inverter Speed Command<br>*Comm Loss: Fan Inverter Speed Command*<br>Comm: Fan Inverter Speed Cmd | Circuit | Warning and Special Action | Non Latch | All | Continual loss of communication between the MP and the Functional ID has occurred for a 35-40 second period. Revert to fixed-speed fan algorithm using remaining fans. | Remote |
| Comm Loss: Heat Recovery Entering Water Temperature Sensor<br>*Comm Loss: HR Entering Water Temperature*<br>Comm: HR Entering Water Temp | Heat Recovery | Warning or Normal | Latch | All | Continual loss of communication between the MP and the Functional ID has occurred for a 35-40 second period. Warning for Partial Heat Recovery. Normal shutdown for Total Heat Recovery. | Remote |
| Comm Loss: Heat Recovery Leaving Water Temperature Sensor<br>*Comm Loss: HR Leaving Water Temperature*<br>Comm: HR Leaving Water Temp | Heat Recovery | Warning | Latch | All | Continual loss of communication between the MP and the Functional ID has occurred for a 35-40 second period. | Remote |
| Comm Loss: Heat Recovery Three Way Valve<br>*Comm Loss: Heat Recovery Three Way Valve*<br>Comm: HR Three Way Valve | Heat Recovery | Normal | Latch | All | Continual loss of communication between the MP and the Functional ID has occurred for a 35-40 second period. | Remote |

**Table 86. Communication diagnostics (continued)**

| Diagnostic Name | Affects | Severity | Persist-ence | Active Modes [In-active Modes] | Criteria | Reset Level |
|---|---|---|---|---|---|---|
| Comm Loss: Heat/Cool Switch<br>*Comm Loss: Heat/Cool Switch*<br>Comm: Heat/Cool Switch | Chiller | Normal | Latch | All | Continual loss of communication between the MP and the Functional ID has occurred for a 35-40 second period. | Remote |
| Comm Loss: Heating EXV<br>*Comm Loss: Heating EXV*<br>Comm: Heating EXV | Circuit | Immediate | Latch | All | Continual loss of communication between the MP and the Functional ID has occurred for a 35-40 second period. | Remote |
| Comm Loss: High Pressure Cutout Switch<br>*Comm Loss: High Pressure Cutout Switch*<br>Comm: High Press Cutout Sw | Circuit | Immediate | Latch | All | Continual loss of communication between the MP and the Functional ID has occurred for a 35-40 second period. | Remote |
| Comm Loss: Local BAS Interface<br>*Comm Loss: Local BAS Interface*<br>Comm: Local BAS Interface | Chiller | Warning and Special Action | Non Latch | All | Continual loss of communication between the MP and the Functional ID has occurred for a 35-40 second period. Use the last values sent from BAS. | Remote |
| Comm Loss: Night Noise Setback Relay<br>*Comm Loss: Night Noise Setback Relay*<br>Comm: Night Noise Setbk Rly | Chiller | Normal | Latch | All | Continual loss of communication between the MP and the Functional ID has occurred for a 35-40 second period. | Remote |
| Comm Loss: Op Status Programmable Relays<br>*Comm Loss: Op Status Programmable Relays*<br>Comm: Op Status Relays | Chiller | Warning | Latch | All | Continual loss of communication between the MP and the Functional ID has occurred for a 35-40 second period. | Remote |
| Comm Loss: Outdoor Air Temperature<br>*Comm Loss: Outdoor Air Temperature*<br>Comm: Outdoor Air Temp | Chiller | Normal | Latch | All | Continual loss of communication between the MP and the Functional ID has occurred for a 35-40 second period. | Remote |
| Comm Loss: Percent Capacity Output<br>*Comm Loss: Percent Capacity Output*<br>Comm: Percent Capacity Out | Chiller | Warning | Latch | All | Continual loss of communication between the MP and the Functional ID has occurred for a 35-40 second period. | Remote |
| Comm Loss: Phase Protection Fault Input<br>*Comm Loss: Phase Protection Fault Input*<br>Comm: Phase Protect Flt Inp | Chiller | Normal | Latch | All | Continual loss of communication between the MP and the Functional ID has occurred for a 35-40 second period. | Remote |
| Comm Loss: Power Factor Correction Fault Input<br>*Comm Loss: Power Factor Correction Fault*<br>Comm: Pwr Fac Correction Flt | Chiller | Warning | Latch | All | Continual loss of communication between the MP and the Functional ID has occurred for a 35-40 second period. | Remote |
| Comm Loss: Receiver Fill Valve Relay<br>*Comm Loss: Receiver Fill Valve Relay*<br>Comm: Receiver Fill Vlv Rly | Circuit | Normal | Latch | All | Continual loss of communication between the MP and the Functional ID has occurred for a 35-40 second period. | Remote |
| Comm Loss: Reversing Valve<br>*Comm Loss: Reversing Valve*<br>Comm: Reversing Valve | Circuit | Normal | Latch | All | Continual loss of communication between the MP and the Functional ID has occurred for a 35-40 sec period. | Remote |
| Comm Loss: Subcooler Shutoff Valve Relay<br>*Comm Loss: Subcooler Shutoff Valve Relay*<br>Comm: Subcooler Shut Vlv Rly | Circuit | Normal | Latch | All | Continual loss of communication between the MP and the Functional ID has occurred for a 35-40 sec period. | Remote |
| Comm Loss: Suction Pressure Transducer<br>*Comm Loss: Suction Pressure Transducer*<br>Comm: Suction Pressure Xdcr | Circuit | Immediate | Latch | All | Continual loss of communication between the MP and the Functional ID has occurred for a 35-40 second period. | Remote |
| Comm Loss: Suction Temperature<br>*Comm Loss: Suction Temperature*<br>Comm: Suction Temperature | Circuit | Immediate | Latch | All | Continual loss of communication between the MP and the Functional ID has occurred for a 35-40 second period. | Remote |
| Comm Loss: Supplemental Heat Relay 1<br>*Comm Loss: Supplemental Heat Relay 1*<br>Comm: Supplmntl Heat Rly 1 | Chiller | Warning | Latch | All | Continual loss of communication between the MP and the Functional ID for relay 1 has occurred for a 35-40 second period. | Remote |
| Comm Loss: Supplemental Heat Relay 2<br>*Comm Loss: Supplemental Heat Relay 2*<br>Comm: Supplmntl Heat Rly 2 | Chiller | Warning | Latch | All | Continual loss of communication between the MP and the Functional ID for relay 2 has occurred for a 35-40 second period. | Remote |
| Comm Loss: Supplemental Heat Relay 3<br>*Comm Loss: Supplemental Heat Relay 3*<br>Comm: Supplmntl Heat Rly 3 | Chiller | Warning | Latch | All | Continual loss of communication between the MP and the Functional ID for relay 3 has occurred for a 35-40 second period. | Remote |
| Comm Loss: Supplemental Heat Relay 4<br>*Comm Loss: Supplemental Heat Relay 4*<br>Comm: Supplmntl Heat Rly 4 | Chiller | Warning | Latch | All | Continual loss of communication between the MP and the Functional ID for relay 4 has occurred for a 35-40 second period. | Remote |

**Table 86. Communication diagnostics (continued)**

| Diagnostic Name | Affects | Severity | Persist-ence | Active Modes [In-active Modes] | Criteria | Reset Level |
|---|---|---|---|---|---|---|
| Excessive Loss of Comm<br>*Excessive Loss of Comm*<br>Excessive Loss of Comm | Chiller | Immediate | Latch | All | Loss of comm with 10 or more LLIDs has been detected. Diagnostic will suppress callout of all subsequent comm loss diagnostics. Check power supply(s), power disconnects. Troubleshoot LLID bus in TechView. | Remote |

# Main Processor- Boot Messages and Diagnostics

| DynaView Display | Description/Troubleshooting |
|---|---|
| A Valid Configuration is Present | A valid configuration is present in the MP's nonvolatile memory. The configuration is a set of variables and settings that define the physical makeup of this particular chiller. These include: number/airflow,/and type of fans, number/and size of compressors, special features, characteristics, and control options.<br>// Temporary display of this screen is part of the normal power up sequence. |
| App Present. Running Selftest.… Selftest Passed | An application has been detected in the Main Processor's nonvolatile memory and the boot code is proceeding to run a check on its entirety. 8 seconds later, the boot code had completed and passed the (CRC) test.<br>// Temporary display of this screen is part of the normal power up sequence. |
| App Present. Running Selftest Err3: CRC Failure | An application has been detected in Main Processor's nonvolatile memory and the boot code is proceeding to run a check on its entirety. A few seconds later, the boot code had completed but failed the (CRC) test.<br>//Connect a TechView Service Tool to the MP's serial port, provide chiller model number (configuration information) and download the configuration if prompted by TechView. Then proceed to download the most recent RTAC application or specific version as recommended by Technical Service. Note that this error display may also occur during the programming process, if the MP never had a valid application any time prior to the download. If problem persists, replace MP. |
| Boot Software Part Numbers:<br>LS Flash --> 6200-0318-XX<br>MS Flash --> 6200-0319-XX | The "boot code" is the portion of the code that is resident in all MPs regardless of what application code (if any) is loaded. Its main function is to run power up tests and provide a means for downloading application code via the MP's serial connection. The Part numbers for the code are displayed in the lower left hand corner of the DynaView during the early portion of the power up sequence and during special programming and converter modes. See below.<br>// This is normal, but you should provide this information when contacting Technical Service about power up problems. |
| Converter Mode | A command was received from the Service Tool (Tech View) to stop the running application and run in the "converter mode". In this mode the MP acts as a simple gateway and allows the TechView service computer to talk to all the LLIDS on the IPC3 bus. |
| Err2: RAM Addr Test #1 Failure | There were RAM errors detected in RAM Address Test #1. //Recycle power, if error persists, replace MP. |
| Err2: RAM Addr Test #2 Failure | There were RAM errors detected in RAM Address Test #2. //Recycle power, if the error persists, replace MP. |
| Err2: RAM Pattern 1 Failure | There were RAM errors detected in RAM Test Pattern #1. // Recycle power, if the error persists, replace MP. |
| Err2: RAM Pattern 2 Failure | There were RAM errors detected in RAM Test Pattern #2. //Recycle power, if the error persists, replace MP. |
| Err4: UnHandled Interrupt<br>Restart Timer:<br>[3 sec countdown timer] | An unhandled interrupt has occurred while running the application code. This event will normally cause a safe shutdown of the entire chiller. Once the countdown timer reaches 0, the processor will reset, clear diagnostics, and attempt to restart the application and allow a normal restart of chiller as appropriate.<br>// This condition might occur due to a severe electro-magnetic transient such as can be caused by a near lightening strike. Such events should be rare or isolated and if no damage results to the CH.530 control system, the Chiller will experience a shutdown and restart. If this occurs more persistently it may be due to an MP hardware problem. Try replacing the MP. If replacement of the MP proves ineffective, the problem may be a result of extremely high radiated or conducted EMI. Contact Technical Service.<br>If this screen occurs immediately after a software download, attempt to reload both the configuration and the application. Failing this, contact Technical Service. |
| Err5: Operating System Error<br>Restart Timer:<br>[3 sec countdown timer] | An Operating System error has occurred while running the application code. This event will normally cause a safe shutdown of the entire chiller. Once the countdown timer reaches 0, the processor will reset, clear diagnostics, and attempt to restart the application and allow a normal restart of chiller as appropriate.<br>// See Err 4 above |
| Err6: Watch Dog Timer Error<br>Restart Timer:<br>[3 sec countdown timer] | A Watch Dog Timer Error has occurred while running the application code. This event will normally cause a safe shutdown of the entire chiller. Once the countdown timer reaches 0, the processor will reset, clear diagnostics, and attempt to restart the application allowing a normal restart of chiller as appropriate. |
| Err7: Unknown Error<br>Restart Timer:<br>[3 sec countdown timer] | An unknown Error has occurred while running the application code. This event will normally cause a safe shutdown of the entire chiller. Once the countdown timer reaches 0, the processor will reset, clear diagnostics, and attempt to restart the application allowing a normal restart of chiller as appropriate |
| Err8: Held in Boot by User Key Press<br>[3 sec countdown timer] | A touch was detected during boot indicating the user wanted to stay in boot mode. This mode can be used to recover from a fatal software error in the application code. Cycle power on the MP to clear this error if it was unintentional. |
| MP Application Memory CRC Error | App software inside the MP failed its own checksum test. Possible causes: application software in the MP is not complete – software download to the MP was not completed successfully - or MP hardware problem. Note: User should attempt to reprogram the MP if this diagnostic occurs. |
| MP: Invalid Configuration | MP has an invalid configuration based on the current software installed |
| No Application Present<br>Please Load Application... | No Main Processor Application is present – There are no RAM Test Errors.<br>// Connect a TechView Service Tool to the MP's serial port, provide chiller model number (configuration information) and download the configuration if prompted by TechView. Then proceed to download the most recent application or specific version as recommended by Technical Service. |
| Programming Mode | A command was received by the MP from the Tech View Service Tool and the MP is in the process of first erasing and then writing the program code to its internal Flash (nonvolatile) Memory. Note that if the MP never had a prior application already in memory, the error code "Err3"will be displayed instead of this, during the programming download process. |

# Unit Wiring

Table below provides a list of 20-130 ton CGAM electrical schematics, field wiring and connection diagrams. Wiring diagrams can be accessed via e-Library. A laminated wiring diagram kit is also shipped with each unit.

| Drawing Number | | Description | |
|---|---|---|---|
| 2311-5510<br>Slant Frame Units | Sheet 1 | Schematic<br>Slant Frame Units | Table of Contents |
| | Sheet 2 | | Legend |
| | Sheet 3 | | Notes |
| | Sheet 4 | | Compressor Power Circuit 1 |
| | Sheet 5 | | Blank |
| | Sheet 6 | | Fan Power Circuit 1 |
| | Sheet 7 | | Fan Power Circuit 1 |
| | Sheet 8 | | Blank |
| | Sheet 9 | | Blank |
| | Sheet 10 | | Pump Power/Control |
| | Sheet 11 | | Compressor Control |
| | Sheet 12 | | Fan Control, 2 and 3 Fan/Ckt Units |
| | Sheet 13 | | Blank |
| | Sheet 14 | | Common Control |
| | Sheet 15 | | CH530 Control |
| | Sheet 16 | | Freeze Protection |
| 2311-5511<br>V Frame Units | Sheet 1 | Schematic<br>V Frame Units | Table of Contents |
| | Sheet 2 | | Legend |
| | Sheet 3 | | Notes |
| | Sheet 4 | | Compressor Power Circuit 1 |
| | Sheet 5 | | Compressor Power Circuit 2 |
| | Sheet 6 | | Fan Power Circuit 1 |
| | Sheet 7 | | Fan Power Circuit 1 |
| | Sheet 8 | | Fan Power Circuit 2 |
| | Sheet 9 | | Fan Power Circuit 2 |
| | Sheet 10 | | Pump Power/Control |
| | Sheet 11 | | Compressor Control |
| | Sheet 12 | | Fan Control, 2 and 3 Fan/Ckt Units |
| | Sheet 13 | | Blank |
| | Sheet 14 | | Common Control |
| | Sheet 15 | | CH530 Control |
| | Sheet 16 | | Freeze Protection |
| 2309-2075<br>W Frame Units | Sheet 1 | Schematic<br>W Frame Units | Table of Contents |
| | Sheet 2 | | Legend |
| | Sheet 3 | | Notes |
| | Sheet 4 | | Compressor Power Circuit 1 |
| | Sheet 5 | | Compressor Power Circuit 2 |
| | Sheet 6 | | Fan Power Circuit 1 |
| | Sheet 7 | | Fan Power Circuit 1 |
| | Sheet 8 | | Fan Power Circuit 2 |
| | Sheet 9 | | Fan Power Circuit 2 |
| | Sheet 10 | | Pump Power/Control |
| | Sheet 11 | | Compressor Control |
| | Sheet 12 | | Fan Control, 2 and 3 Fan/Ckt Units |
| | Sheet 13 | | Fan Control, 4 and 5Fan/Ckt Units |
| | Sheet 14 | | Common Control |
| | Sheet 15 | | CH530 Control |
| | Sheet 16 | | Freeze Protection |
| 2309-2076 | Sheet 1 | Field Wiring | Diagram |
| | Sheet 2 | | Notes |
| 5720-6468 | Sheet 1 | Diagram - Slant Frame | Component Location - Control Panel |
| | Sheet 2 | | |
| 5720-6497 | | Assembly - Slant Frame | Device Location Sensor and CH530 |
| 5720-6469 | Sheet 1, 2 | Diagram - V frame | Component Location - Control Panel |
| 5720-6498 | | Assembly - V Frame | Assembly - Device Location Sensor and CH530 - V frame |
| 5720-6470 | Sheet 1, 2 | Diagram - W Frame | Component Location - Control Panel |
| 5720-6499 | | Assembly - W Frame | Assembly - Device Location Sensor and CH530 |
| 5722-4410 | | Diagram - Slant, V, W | Component Location - VSD Pump Enclosure |

# Log and Check Sheet

The check sheet is included for use as appropriate, for installation completion verification before Trane start-up is scheduled, and for reference during the Trane start-up.

Where the check sheet also exists outside of this publication as standalone literature, the literature order number is also listed.

CGAM Installation Completion Check Sheet and Request for Trane Service (CG-ADF001*-EN).

Page left intentionally blank

# CGAM Air-Cooled Scroll Chiller
# Installation Completion Check Sheet and Request for Trane Service

***Important:*** *A copy of this completed form must be submitted to the Trane service agency that will be responsible for the start-up of the chiller. Start-up will NOT proceed unless applicable items listed in this form have been satisfactorily completed.*

| | |
|---|---|
| To: | Trane Service Office: |
| S.O. Number: | Serial Numbers: |
| Job/Project Name: | |
| Address: | |
| The following items are being installed and will be completed by: | |

***Important:*** *Start-up must be performed by Trane or an agent of Trane specifically authorized to perform start-up of Trane® products. Contractor shall provide Trane (or an agent of Trane specifically authorized to perform start-up) with notice of the scheduled start-up at least two weeks prior to the scheduled start-up.*

***Important:*** ***It is required that heaters are energized for a minimum of 24 hours prior to start up. Therefore, chiller should have power for this amount of time before Trane Service arrives to do start-up.***


## Copyright

This document and the information in it are the property of Trane, and may not be used or reproduced in whole or in part without written permission. Trane reserves the right to revise this publication at any time, and to make changes to its content without obligation to notify any person of such revision or change.

## Trademarks

All trademarks referenced in this document are the trademarks of their respective owners.


## Revision History

Updated check sheet template.

Check boxes if the task is complete or if the answer is "yes."

1. **CGAM Chiller**
   - ☐ Installation meets foundation requirements.
   - ☐ In place and piped.
   - ☐ Isolation pads or neoprene pads installed (optional).

2. **Piping**

   Chilled water piping connected to:
   - ☐ Evaporator
   - ☐ Heat recovery (if applicable)
   - ☐ Air handling units
   - ☐ Pumps (no piping to pump required if optional pump package is installed)
   - ☐ Secondary flow proving device installed (recommended)
   - ☐ Strainer installed and cleaned
   - ☐ Verify chilled water inlet vents and chilled water outlet drains are closed.

   ☐ Water supply connected to filling system

   ☐ Does unit have freeze inhibitor? If unit has freeze inhibitor:
   - ☐ Verify type and concentration correct per unit submittal
   - ☐ Calculate and record freeze point of the solution:_____

   ☐ Systems filled

   ☐ Pumps run, air bled from system

   ☐ Strainer cleaned

   ***Note:*** *Do NOT remove strainer mesh to clean the system.*

   ☐ Relief valve ventilation piping installed (if applicable)

   Flow balancing valves installed on:
   - ☐ Leaving chilled water
   - ☐ Optional heat recovery (if applicable)

   Gauges, thermometers, and air vents installed on:
   - ☐ Both sides of evaporator
   - ☐ Optional heat recovery (if applicable)

**3. Wiring**

- ☐ Wire size per submittal and NEC 310-16.
- ☐ Unit is properly grounded.
- ☐ Wiring connects are tight.

  ***Note:*** *Do NOT overtorque.*
- ☐ Full power available, and within utilization range.
- ☐ Interconnecting wiring to control panel (as required)
- ☐ External interlocks (secondary proof of flow, pumps auxiliary, etc.)
- ☐ Chilled water pump connected and tested (not required if optional pump package is installed)
- ☐ Heat recovery condenser water pump (as applicable)
- ☐ 115 Vac power available for service tools
- ☐ All controls installed and connected

**4. Testing**

- ☐ Trace gas amounts of R-410A available for leak testing, if necessary

**5. ☐ Refrigerant on job site, if unit shipped with nitrogen charge**

- ☐ Dry nitrogen available for pressure testing

**6. ☐ Systems can be operated under load conditions**

***Important:*** *Start-up cannot be completed without ability to fully load the unit.*

**7. Heaters**

- ☐ Verify that the compressor oil sump heaters are installed tightly around the compressor. Energize and verify heaters are operational using a temperature probe.
- ☐ If unit was factory charged (model number digit 20 = 1), **energize heaters for 24 hours prior to start up.**

  ***Important:*** ***It is required that chiller heaters are energized for a minimum of 24 hours prior to start up. Therefore, chiller should have power for this amount of time before Trane Service arrives to do start-up.***
- ☐ If unit has nitrogen charge (model number digit 20 = 2), contact Trane Service for unit charging prior to start-up.

**8. Owner awareness**

- ☐ Does the owner have a copy of the MSDS for refrigerant?

***Note:*** *Additional time required to properly complete the start-up and commissioning, due to any incompleteness of the installation, will be invoiced at prevailing rates.*

This is to certify that the Trane® equipment has been properly and completely installed, and that the applicable items listed above have been satisfactorily completed.

***Important:*** *It is required that the chiller heaters are energized for a minimum of 24 hours prior to start up. Therefore, the chiller should have power for this amount of time before Trane Service arrives to do start-up of the equipment.*

Checklist completed by: _____

Signed: _____ Date: _____

In accordance with your quotation and our purchase order number _____, we will therefore require the presence of Trane service on this site, for the purpose of start-up and commissioning, by _____ (date).

***Note:*** *Minimum two-week advance notification is required to allow scheduling of the chiller start-up.*

Additional comments/instructions: _____

_____

_____

_____

_____

_____

_____

***Note:*** *A copy of this completed from must be submitted to the Trane Service Office that will be responsible for start-up of chiller.*

Trane - by Trane Technologies (NYSE: TT), a global climate innovator - creates comfortable, energy efficient indoor environments for commercial and residential applications. For more information, please visit trane.com or tranetechnologies.com.

Trane has a policy of continuous product and product data improvement and reserves the right to change design and specifications without notice. We are committed to using environmentally conscious print practices.

CG-ADF001E-EN 12 Mar 2020
Supersedes CG-ADF001D-EN (Aug 2017)

©2020 Trane

Trane - by Trane Technologies (NYSE: TT), a global climate innovator - creates comfortable, energy efficient indoor environments for commercial and residential applications. For more information, please visit trane.com or tranetechnologies.com.

Trane has a policy of continuous product and product data improvement and reserves the right to change design and specifications without notice. We are committed to using environmentally conscious print practices.

CG-SVX17N-EN 30 Jul 2022
Supersedes CG-SVX17M-EN (Mar 2021)

©2022 Trane