Installation, Operation, and Maintenance

Electric Architectural Forced-Air Wall Heater

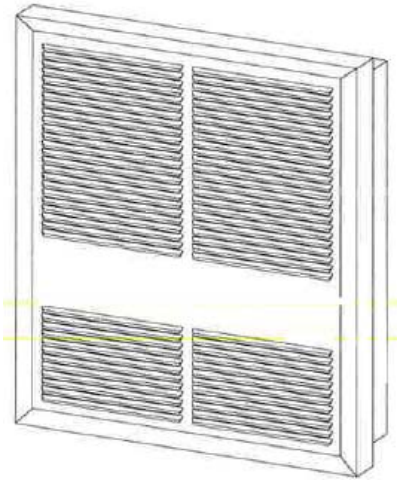

UHAA-15 (1500 Watts
UHAA-02 (2000 Watts)
UHAA-03 (3000 Watts)
UHAA-04 (4000 Watts)
UHAA-48 (4800 Watts)

⚠ SAFETY WARNING

Only qualified personnel should install and service the equipment. The installation, starting up, and servicing of heating, ventilating, and air-conditioning equipment can be hazardous and requires specific knowledge and training. Improperly installed, adjusted or altered equipment by an unqualified person could result in death or serious injury. When working on the equipment, observe all precautions in the literature and on the tags, stickers, and labels that are attached to the equipment.

November 2015

UHAA-IOM-1E

Introduction

Warnings, Cautions, and Notices

Safety advisories appear throughout this manual as required. Your personal safety and the proper operation of this machine depend upon the strict observance of these precautions.

The three types of advisories are defined as follows:

⚠WARNING	Indicates a potentially hazardous situation which, if not avoided, could result in death or serious injury.
⚠CAUTION	Indicates a potentially hazardous situation which, if not avoided, could result in minor or moderate injury. It could also be used to alert against unsafe practices.
NOTICE	Indicates a situation that could result in equipment or property-damage only accidents.

⚠WARNING

Proper Field Wiring and Grounding Required!

Failure to follow code could result in death or serious injury. All field wiring MUST be performed by qualified personnel. Improperly installed and grounded field wiring poses FIRE and ELECTROCUTION hazards. To avoid these hazards, you MUST follow requirements for field wiring installation and grounding as described in NEC and your local/state electrical codes. Failure to follow code could result in death or serious injury.

⚠WARNING

Personal Protective Equipment (PPE) Required!

Installing/servicing this unit could result in exposure to electrical, mechanical and chemical hazards.

- **Before installing/servicing this unit, technicians MUST put on all PPE required for the work being undertaken (Examples; cut resistant gloves/sleeves, butyl gloves, safety glasses, hard hat/bump cap, fall protection, electrical PPE and arc flash clothing). ALWAYS refer to appropriate Material Safety Data Sheets (MSDS)/Safety Data Sheets (SDS) and OSHA guidelines for proper PPE.**
- **When working with or around hazardous chemicals, ALWAYS refer to the appropriate MSDS/SDS and OSHA/GHS (Global Harmonized System of Classification and Labelling of Chemicals) guidelines for information on allowable personal exposure levels, proper respiratory protection and handling instructions.**
- **If there is a risk of energized electrical contact, arc, or flash, technicians MUST put on all PPE in accordance with OSHA, NFPA 70E, or other country-specific requirements for arc flash protection, PRIOR to servicing the unit. NEVER PERFORM ANY SWITCHING, DISCONNECTING, OR VOLTAGE TESTING WITHOUT PROPER ELECTRICAL PPE AND ARC FLASH CLOTHING. ENSURE ELECTRICAL METERS AND EQUIPMENT ARE PROPERLY RATED FOR INTENDED VOLTAGE.**

Failure to follow instructions could result in death or serious injury.

Copyright

Trademarks

Revision History

- UHAA-IOM-1(September1990)

Original issue of manual, specifically intended for use by experienced service technicians. Provides installation procedures and operating instructions for "A" design sequence UHAA Electric Architectural Forced-Air Wall Heaters.

- UHAA-IOM-1A(April 1993) Metric dimensions added
- UHAA-IOM-1 B (May 1993) U. L. changes added to wiring diagram. Heater employs a visual alarm light to warn that parts of the heater are getting excessively hot.
- UHAA-IOM-1C (July 1994) Minor change in introduction.
- UHAA-IOM-10(April1997) Modified for Canadian use.
- UHAA-IOM-1E (Nov. 2015) U.L. standard update added page 6 for disconnect switch lockout instructions and revised Figure 7 wiring designations for Day/Night Relay.

Table of Contents

Model Number Codes

All standard Trane products are identified by a multiple character model number that precisely identifies each unit. An explanation of the alphanumeric identification code used for UHAA units is provided below. Use of the unit model number will enable the owner/operator, installing contractors, and service technicians to define the installation, components and options for any specific unit.

Important: *Be sure to refer to the model number stamped on the unit name plate label when ordering replacement parts or requesting service.*

The following sample model number demonstrates the use of the listed codes:

Model Number: **U H A A 1 5 1 A T A D R**

Digit Number 1 2 3 4 5 6 7 8 9 10 11 12

Digits 1,2,3

ProductDescription

UHA = Electrical Architectural Forced Air Wall Heater - Series 3320

Digit4

Development Sequence

A = First Generation

Digit 5,6

Unit Capacity

15 = 1500 Watts

02 = 2000 Watts

03 = 3000 Watts

04 = 4000 Watts

48 = 4800 Watts

Digit 7

Element Phase

1 = Single-Phase

Digit8

Element and Motor Voltage

A= 208 Volts

B = 240 Volts

C = 277 Volts

E = 120 Volts

Digit 9

Thermostat

T = Built-In Thermostat

Digit 10

Design Sequence

A = First Design Sequence

Digit 11

Disconnect Type

D = Built-In Disconnect Switch

Digit 12

Relay (Optional)

R = Built-In Day/Night Relay

Important Precautions

⚠WARNING

Safety Instructions!

Failure to follow safety precautions in this section could result in death, serious injury, and property damage.

When using electrical appliances, basic precautions should always be followed to reduce the risk of fire, electrical shock, and injury to persons, including the following:

- Read all instructions before using this heater.
- Keep cords and all other combustible material, such as furniture, papers, clothes and curtains away from the heater. For safe and efficient operation, keep an open space around heater of three feet in front and 12 inches at ends and rear.
- Extreme caution is necessary when any heater is used by or near children or invalids and whenever the heater is left operating and unattended.
- Do not operate any heater after it malfunctions, has been dropped or damaged in any manner. Return heater to authorized service facility for examination, electrical or mechanical adjustment, or repair.
- Do not use outdoors.
- To disconnect the heater, turn controls to off, and turn off power to heater circuit at main disconnect panel (or operate internal disconnect switch if provided).
- Do not insert or allow foreign objects to enter any ventilation or exhaust opening as this may cause an electric shock.
- To prevent a possible fire, do not block air intakes or exhaust in any manner.
- Be aware that the heater has hot and arcing or sparking parts inside.
- WARNING: Do not use it in area where gasoline, paint, or flammable liquids are used or stored.
- Use this heater only as described in this manual. Any other use not recommended by the manufacturer may cause fire, electric shock, or injury to persons.
- This heater may include an audible or visual alarm to warn that parts of the heater are getting excessively hot.
- If the alarm sounds (or illuminates), immediately turn the heater off and inspect for any objects on or adjacent to the heater that may have blocked the airflow or otherwise caused high temperatures to occur.
- DO NOT OPERATE THE HEATER WITH THE ALARM SOUNDING (OR ILLUMINATING).
- SAVE THESE INSTRUCTIONS.
- Switch Lockout

Note: *Front grille must remain off during lockout for switch lockout hasp or padlock through bracket as shown here.*

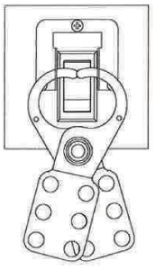

Installation Instructions

Locating the Heater

⚠WARNING

Fire Hazard!

Failure to follow instructions below could result in death or serious injury.

Heater is designed to be mounted on the wall near the ceiling or floor, with airflow directed downward. Minimum mounting height for the heater is 8" (203.2mm) above a finished floor (see Figure 1).

1. Use 3320EX33 for surface mounting.
2. Observe the proper clearances:

Figure 1. Architectural Wall Heater Clearance

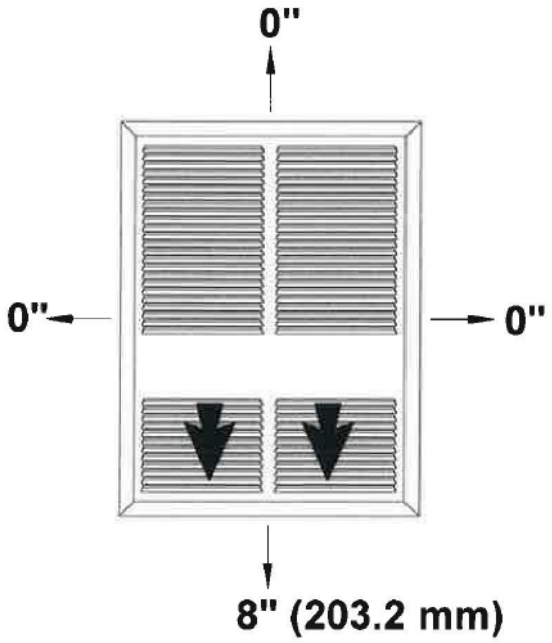

⚠CAUTION

Avoid Heater Malfunction!

Do not allow curtains, furniture, or other objects to obstruct the front grille of the heater since proper heater operation requires a free flow of intake and exhaust air.

Before Mounting

⚠WARNING

Hazardous Voltage!

Disconnect all electric power, including remote disconnects before servicing. Follow proper lockout/tagout procedures to ensure the power can not be inadvertently energized. Failure to disconnect power before servicing could result in death or serious injury.

1. Insure that supply voltage matches voltage rating on heater label.
2. Turn off electrical power to heater circuit.

Mounting Instructions

You can either flush-mount or surface-mount the heater by performing the following steps:

1. Disassemble heater by removing seven screws shown as "C" in Figure 2 and 3.
2. Complete one of the following sequences according to Figure 2 or

To Flush-Mount Heater:

1. Place wall box "A" between studs at desired height
2. Secure to studs through holes "M" in box.

   The flanges on the wall box must rest on the surface of the finished wall. Be sure to allow for wall thickness.

Figure 2. Flush-Mounting Heater Into Wall

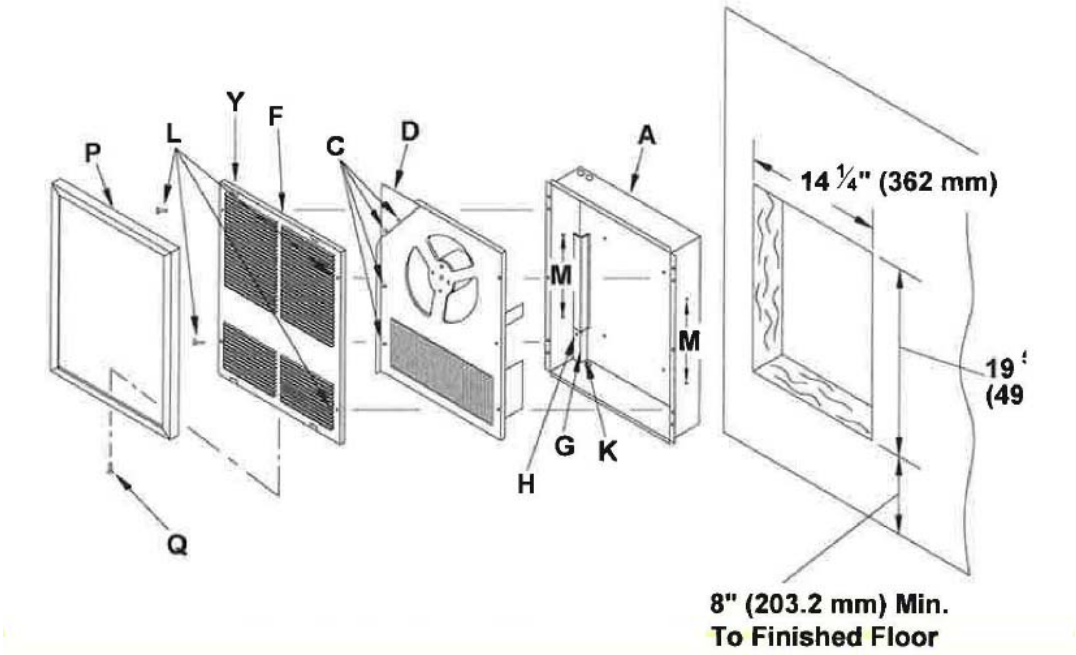

To Surface-Mount Heater:

1. Secure wall box "A" to wall at desired height through holes "X" in box.
2. Place surface adapter "E" over wall box.
3. Bring electrical service in through bottom knockout "K" for surface mounting only.

Figure 3. Surface-Mounting Heater on a Wall

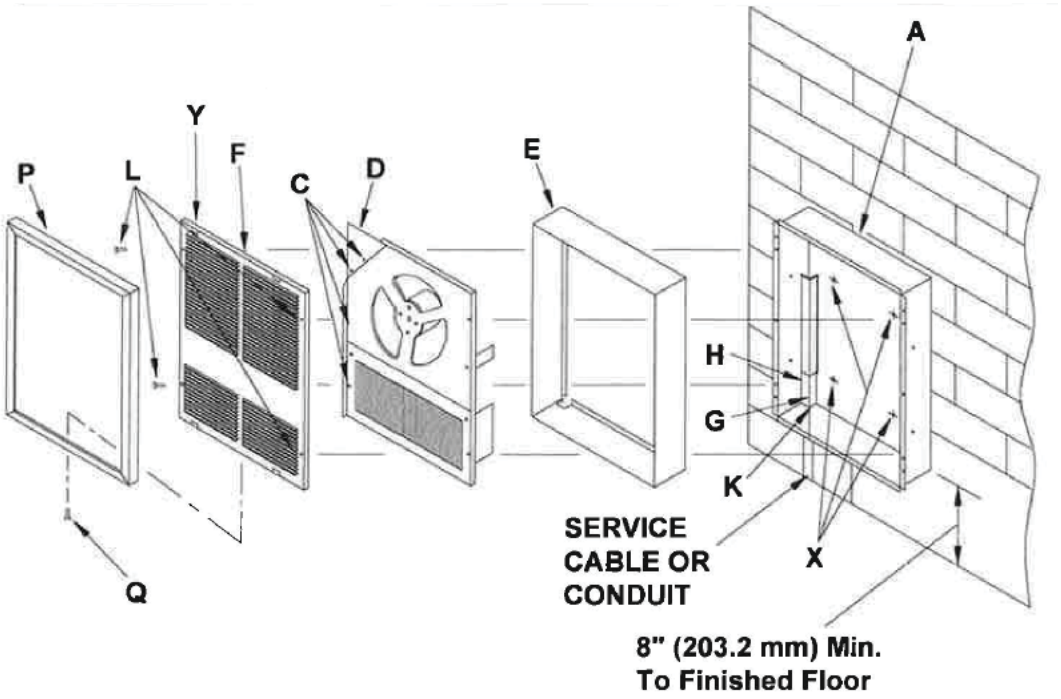

Wiring Instructions

Typical UHAA unit wiring diagrams are provided in figures 4 through 7. Heater electrical data is provided in Table 1. All wiring must comply with NEC, CEC, and local codes.

⚠ WARNING

Hazardous Voltage!

Disconnect all electric power, including remote disconnects before servicing. Follow proper lockout/tagout procedures to ensure the power can not be inadvertently energized. Failure to disconnect power before servicing could result in death or serious injury.

NOTICE:

Use Copper Conductors Only!

Unit terminals are not designed to accept other types of conductors. Failure to use copper conductors could result in equipment damage.

1. Bring service leads in through knockouts "K" (Figures 2 and 3) on top or bottom of wall box for flush-mounting the heater. Bring service leads in through bottom knockouts "K" only for surface-mounting the heater. When bringing wiring in from the bottom, install wires through cover "G" by removing screw "H".
2. Connect service leads to two black leads on 208V/240V models; connect to black and white leads on 120V/277V models. Connect ground lead to green wire with approved connectors.
3. Attach wiring compartment cover "D" to heater assembly with screw "C". Refer to Figure 2 and 3.

Table 1. UHAA Unit Electrical Data

Model Number	Watts	Btu / Hr. Output
UHAA-15	1,500	5,119
UHAA-02	2,000	6,825
UHAA-03	3,000	10,250
UHAA-04	4,000	13,650
UHAA-48	4800	16,380

Junction box volume = 52 CI (1321 mm)

Wiring Schematics

Figure 4. Standard UHAA Unit

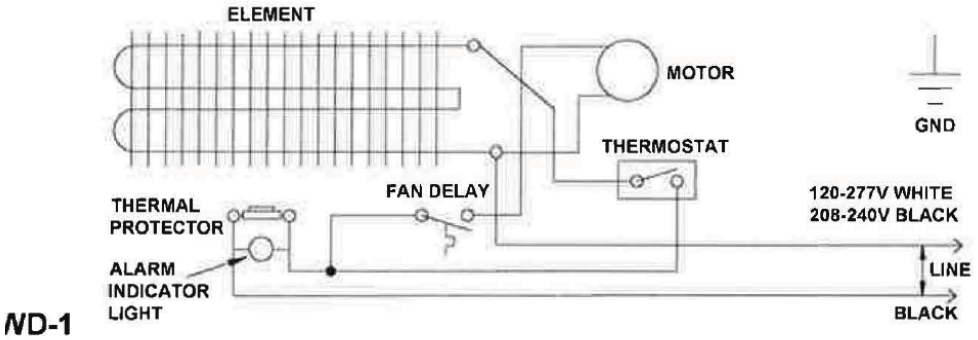

Figure 5. UHAA Unit with Disconnect Switch

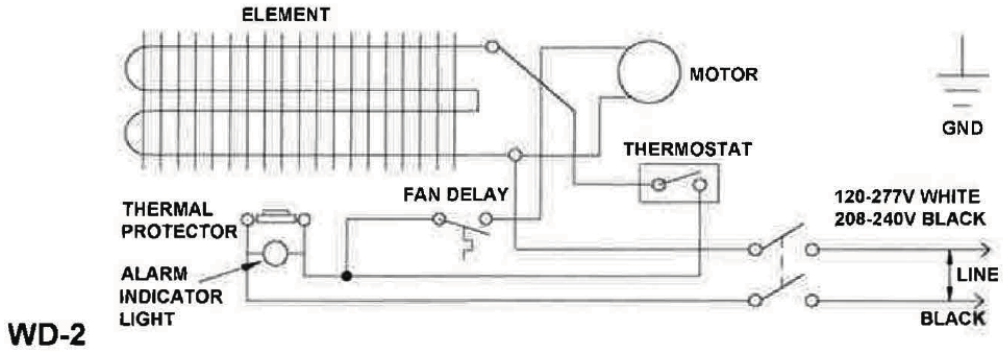

Figure 6. UHAA Unit with Day/Night Relay

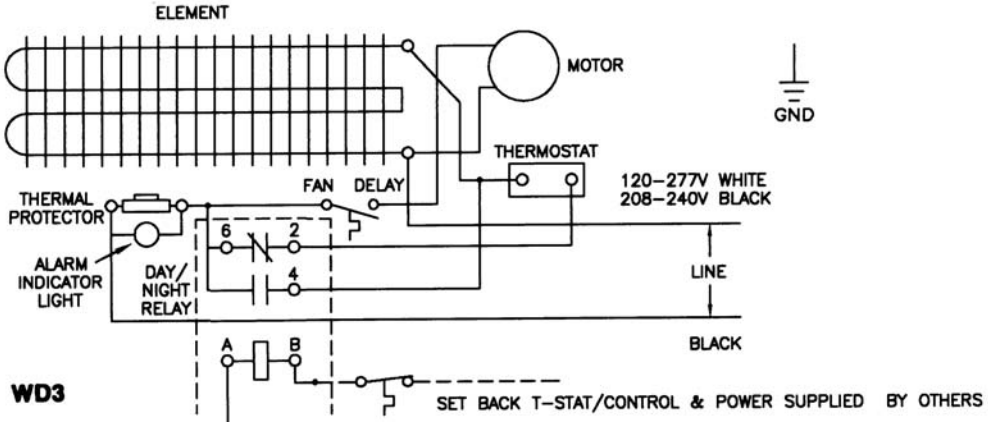

Notes:

- *Relay control voltage, are terminals A & B.*
- *Control voltage is the same as heater supply voltage on 120V, 208V and 240V heaters.*
- *120V control voltage on 277V heaters*

Figure 7. UHAA Unit With Day/Night Relay Disconnect Switch

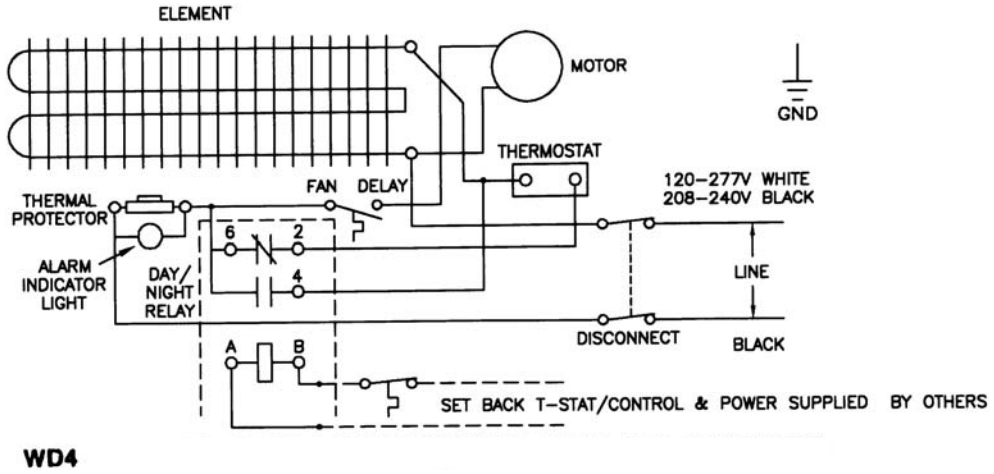

Notes:

- *Relay control voltage, are terminals A & B.*
- *Control voltage is the same as heater supply voltage on 120V, 208V and 240V heaters.*
- *120V control voltage on 277V heaters*

Operation and Maintenance

This section explains startup, operating, and maintenance procedures.

Pre-Start Procedures

Complete the following steps before startup:

1. Clean all construction dirt and debris from inside heater.
2. Attach front grille "F" with four screws "L". See Figures 2 and 3.
3. Position frame "P" over spring clips "Y" and snap in place. Secure with screw "Q".

Operating Instructions

1. Turn power on at circuit breaker.
2. Insert small-bladed screwdriver through grille opening into slot in thermostat adjusting stem.
3. Turn stem fully clockwise.

   Heating element will energize and after short delay, the fan should start, causing warm-air discharge from bottom of grille.
4. When desired temperature is reached, turn thermostat stem counterclockwise until it de-energizes with an audible "click".

This heater employs a visual alarm (light) to warn that parts of the heater are getting excessively hot. If the alarm illuminates, immediately disconnect power from heater and inspect for any objects on or adjacent to the heater that may cause high temperatures. Do not operate the heater with the alarm (light) illuminated.

Maintenance Instructions

⚠ WARNING

Hazardous Voltage!

Disconnect all electric power, including remote disconnects before servicing. Follow proper lockout/tagout procedures to ensure the power can not be inadvertently energized. Failure to disconnect power before servicing could result in death or serious injury.

1. Once a year, disconnect electrical power at power source.
2. Remove front grille from heater and clean dust from heater and grille.
3. Lubricate the motor with SAE No. 10 oil. Oil fittings are provided on front and back of motor.
4. Reassemble heater and restore electrical power to it.

Notes

Trane optimizes the performance of homes and buildings around the world. A business of Ingersoll Rand, the leader in creating and sustaining safe, comfortable and energy efficient environments, Trane offers a broad portfolio of advanced controls and HVAC systems, comprehensive building services, and parts. For more information, visit www.Trane.com.

UHAA-IOM-1E 04 Nov 2015
Supersedes UHAA-IOM-1D 04 Apr 1997