Installation, Operation, and Maintenance

UniTrane™ Fan-Coil and Force-Flo™ Air Conditioners

200 to 1,200 cfm

Models FC and FF "ZO" and later design sequence
Low vertical models FCKB and FCLB "SO" and later design sequence

⚠SAFETY WARNING

Only qualified personnel should install and service the equipment. The installation, starting up, and servicing of heating, ventilating, and air-conditioning equipment can be hazardous and requires specific knowledge and training. Improperly installed, adjusted or altered equipment by an unqualified person could result in death or serious injury. When working on the equipment, observe all precautions in the literature and on the tags, stickers, and labels that are attached to the equipment.

April 2012

UNT-SVX07D-EN

Warnings, Cautions and Notices

Warnings, Cautions and Notices. Note that warnings, cautions and notices appear at appropriate intervals throughout this manual. Warnings are provide to alert installing contractors to potential hazards that could result in death or personal injury. Cautions are designed to alert personnel to hazardous situations that could result in personal injury, while notices indicate a situation that could result in equipment or property-damage-only accidents.

Your personal safety and the proper operation of this machine depend upon the strict observance of these precautions.

Read this manual thoroughly before operating or servicing this unit.

ATTENTION: Warnings, Cautions and Notices appear at appropriate sections throughout this literature. Read these carefully:

⚠WARNING	Indicates a potentially hazardous situation which, if not avoided, could result in death or serious injury.
⚠CAUTION	Indicates a potentially hazardous situation which, if not avoided, could result in minor or moderate injury. It could also be used to alert against unsafe practices.
NOTICE:	Indicates a situation that could result in equipment or property-damage only

Important Environmental Concerns!

Scientific research has shown that certain man-made chemicals can affect the earth's naturally occurring stratospheric ozone layer when released to the atmosphere. In particular, several of the identified chemicals that may affect the ozone layer are refrigerants that contain Chlorine, Fluorine and Carbon (CFCs) and those containing Hydrogen, Chlorine, Fluorine and Carbon (HCFCs). Not all refrigerants containing these compounds have the same potential impact to the environment. Trane advocates the responsible handling of all refrigerants-including industry replacements for CFCs such as HCFCs and HFCs.

Responsible Refrigerant Practices!

Trane believes that responsible refrigerant practices are important to the environment, our customers, and the air conditioning industry. All technicians who handle refrigerants must be certified. The Federal Clean Air Act (Section 608) sets forth the requirements for handling, reclaiming, recovering and recycling of certain refrigerants and the equipment that is used in these service procedures. In addition, some states or municipalities may have additional requirements that must also be adhered to for responsible management of refrigerants. Know the applicable laws and follow them.

This product uses an electronic variable speed motor control, which includes a line reactor to minimize power line harmonic currents. It is recommended that good wiring practices be followed to manage building electrical power system harmonic voltages and currents to avoid electrical system problems or other equipment interaction.

⚠WARNING

Proper Field Wiring and Grounding Required!

All field wiring MUST be performed by qualified personnel. Improperly installed and grounded field wiring poses FIRE and ELECTROCUTION hazards. To avoid these hazards, you MUST follow requirements for field wiring installation and grounding as described in NEC and your local/state electrical codes. Failure to follow code could result in death or serious injury.

⚠WARNING

Personal Protective Equipment (PPE) Required!

Installing/servicing this unit could result in exposure to electrical, mechanical and chemical hazards.

- **Before installing/servicing this unit, technicians MUST put on all Personal Protective Equipment (PPE) recommended for the work being undertaken. ALWAYS refer to appropriate MSDS sheets and OSHA guidelines for proper PPE.**
- **When working with or around hazardous chemicals, ALWAYS refer to the appropriate MSDS sheets and OSHA guidelines for information on allowable personal exposure levels, proper respiratory protection and handling recommendations.**
- **If there is a risk of arc or flash, technicians MUST put on all Personal Protective Equipment (PPE) in accordance with NFPA 70E or other country-specific requirements for arc flash protection, PRIOR to servicing the unit.**

Failure to follow recommendations could result in death or serious injury.

© 2012 Trane All rights reserved

Revision History

The revision of this literature dated 27 Apr 2012 includes information for Tracer™ UC400 controls.

Trademarks

Force-Flo, Rover, Tracer, Tracer Summit, Trane, the Trane logo, and UniTrane are trademarks or registered trademarks of Trane in the United States and other countries. All trademarks referenced in this document are the trademarks of their respective owners.

Echelon, LonTalk, and LonWorks are registered trademarks of Echelon Corporation; Energizer is a registered trademark of Eveready Battery Company, Inc.; Loctite is a registered trademark of Henkel Corporation.

Table of Contents

Warnings, Cautions and Notices 2
Model Number Descriptions 6
General Information 9
Pre-Installation 10
Receiving and Handling 10
Jobsite Storage 10
Installation Preparation 10
Service Access 11
Pre-Installation Checklist 11
Dimensions and Weights 12
Available Models 14
Factory-Installed Piping Packages 15
Vertical Concealed, Model A 16
Vertical Cabinet, Model B 17
Horizontal Concealed, Model C 18
Horizontal Cabinet, Model D 19
Horizontal Recessed, Model E 20
Vertical Wall Hung Cabinet, Model F (Force-Flo Units Only) 21
Vertical Recessed, Model H 22
Vertical Slope Top, Model J 23
Low Vertical Concealed, Model K 24
Low Vertical Cabinet, Model L 25
Inverted Vertical Cabinet, Model M (Force-Flo Units Only) 26
Inverted Vertical Recessed, Model N (Force-Flo Units Only) 27
Compact Concealed, Model P 28
Fan-Coil Coil Connections 29
Force-Flo Coil Connections 30
Fresh Air Opening Locations 32
Wall Box 34
Projection Panel 35
Installation—Mechanical 36
Duct Connections 36
Piping Considerations 36
Installation—General 42
Installing the Unit 42
Vertical Units 42
Horizontal Units 42
Cabinet Units 42
Recessed Units 42
Installation Checklist 44
Installation—Controls 45
General Information 45
Control Options (Including Factory-Installed) 45
Installing Wall-Mounted Wired Sensors . .46
Location Considerations 47
Location Considerations for Wireless zone sensors 47
Fan Mode Switch Installation 47
Zone Sensor Installation 47
Installation—Electrical 49
Unit Wiring Diagrams 49
Supply Power Wiring 49
Electrical Grounding Restrictions 49
Wall-Mounted Control Interconnection Wiring 49
ECM Overview and Setup 53
Overview 53
General Information 53
Trane BLDC Motor 53
ECM Engine Controller 54
Standard Adapter Board 54
CSTI Adapter Board 54
Installation and Initial Setup 55
Installation and Initial Setup 55
Adjustment and Configuration of the Engine Board 57
Status Display 58
Initial Setup and Configuration 63
Configuration 63
Configuring the ECM Engine Controller . .63
Configuring the ECM Engine Board 68
Wired Controllers—Communication Wiring 73
Wiring Installation (ZN510 and ZN520) . . .73
Device Addressing 73

Recommended Communication Wiring Practices 73
Wiring Installation (Tracer UC400) 73
Wiring Overview Outline 74
General Instructions 74
BACnet MS/TP Link 74
Power Supply 75
Wireless Sensors 77
Address Setting 77
Observing the Receiver for Readiness to Associate 78
Associating the Sensor to the Receiver . 78
Testing Signal Strength and Battery Status 78
Configuring the Wireless Display Sensor (Model WDS only) 79
Sensor Operations 82
Wireless Sensor Specifications 85
Pre-Start 87
Pre-Startup Checklist 87
Startup 88
Tracer ZN510 and ZN520 Unit Startup . . 88
Tracer UC400 Unit Startup 88
General Information 88
Fan Mode Switch Operation 89
Tracer ZN010 & ZN510 Operation 89
Tracer ZN520 Operation 89
UC400 Controller Operation 89
Sequence of Operation: Tracer ZN010 and ZN510 89
Binary Inputs (Tracer ZN010 and ZN510) 90
Binary Outputs (Tracer ZN010 and ZN510) 90
Tracer ZN520 Sequence of Operation . . . 92
Cooling Operation (Tracer ZN520) 93
Fan Mode Operation (Tracer ZN520) . . . 94
UC400 Sequence of Operation 99
Power-up Sequence (UC400) 99
Random Start (UC400) 99
Occupancy Modes (UC400) 99
Timed Override Control (UC400) 100
Zone Temperature Control (UC400) . . . 100
Discharge Air Tempering (UC400) 100
Heating or Cooling Mode (UC400) 100
Entering Water Temperature Sampling Function (UC400) 101
Fan Operation (UC400) 101
Exhaust Control (UC400) 102
Valve Operation (UC400) 102
Modulating Outdoor/Return Air Damper (UC400) 102
Two-position Control Of A Modulating Outdoor Air Damper (UC400) 103
Electric Heat Operation (UC400) 103
Dehumidification Operation (UC400) . . .103
Peer-to-peer Communication (UC400) . .104
Unit Protection Strategies (UC400) 104
Maintenance 106
Maintenance Procedures 106
Replacing Motors 108
Periodic Maintenance Checklists 110
Diagnostics 112
Output Testing and Diagnostics (Tracer ZN520) 112
Output Testing and Diagnostics (UC400) .115
Output Testing (UC400) 115
Diagnostics (UC400) 115
Troubleshooting (Wireless Controls) 117
Troubleshooting (Tracer ZN520) 122
Troubleshooting (UC400) 124
Troubleshooting (ECM) 126
General Information (ECM) 126
Troubleshooting Information (ECM) . . .126
Replacing ECM Components 129
Circuit Modules Replacement Notes/Work Instructions 130
ECM Application Notes 132
Wiring Diagrams 133

Model Number Descriptions

UniTrane Fan-Coil

Following is a complete description of the fan-coil model number. Each digit in the model number has a corresponding code that identifies specific unit options.

Note: *Not all options are available on all cabinet styles. Contact your local Trane sales representative for more information.*

Digits 1, 2 — Unit Type

FC = Fan-Coil

Digit 3 — Cabinet Type

A = Vertical Concealed
B = Vertical Cabinet
C = Horizontal Concealed
D = Horizontal Cabinet
E = Horizontal Recessed
H = Vertical Recessed
J = Vertical Cabinet Slope Top
P = Compact Concealed

Digit 4 — Development Sequence "B"

Digits 5, 6, 7 — Unit Size

020	040	080
030	060	100
120		

Digit 8 — Unit Voltage

1	=	115/60/1	4	=	230/60/1
2	=	208/60/1	9	=	220/50/1
3	=	277/60/1			

Digit 9 — Piping System/ Placement

A = No piping, RH, No Auxiliary Drain Pan
B = No piping, LH, No Auxiliary Drain Pan
C = No piping, RH, with Auxiliary Drain Pan
D = No piping, LH, with Auxiliary Drain Pan
E = No piping, RH, No Auxiliary Drain Pan, Extended End Pocket
F = No piping, LH, No Auxiliary Drain Pan, Extended End Pocket
G = No piping, RH, with Auxiliary Drain Pan, Extended End Pocket
H = No piping, LH, with Auxiliary Drain Pan, Extended End Pocket
J = With piping package, RH
K = With piping package, LH
L = With piping package, RH, Extended End Pocket
M = With piping package, LH, Extended End Pocket

Digits 10, 11 — Design Sequence

Digit 12 — Inlets

A = Front Toe Space
B = Front Bar Grille
C = Front Stamped Louver
D = Bottom Stamped Louver
E = Bottom Toe Space
F = Back Duct Collar
G = Back Open Return
H = Back Stamped Louver
K = Exposed fan (Model P only)
L = Bottom filter (Model P only)

Digit 13 — Fresh Air Damper

0 = None
A = Manual, Bottom Opening
B = Manual, Back Opening
C = Manual, Top Opening
D = Auto, 2-Position, Bottom Opening
E = Auto, 2-Position, Back Opening
F = Auto, 2-Position, Top Opening
G = Auto, Economizer, Bottom Opening
H = Auto, Economizer, Back Opening
J = Auto, Economizer, Top Opening
K = No Damper, Bottom Opening
L = No Damper, Back Opening
M = No Damper, Top Opening

Digit 14 — Outlets

A = Front Duct Collar
B = Front Bar Grille
C = Front Stamped Louver
D = Front Quad Grille
G = Top Quad Grille
H = Top Bar Grille
J = Top Duct Collar

Digit 15 — Color

0 = No Paint (Concealed Units Only)
1 = Deluxe Beige
2 = Soft Dove
3 = Cameo White
4 = Driftwood Grey
5 = Stone Grey
6 = Rose Mauve

Digit 16 — Tamperproof Locks/ Leveling Feet

0 = None
B = Keylock Access Door
C = Keylock Panel and Access Door
D = Leveling Feet
F = Keylock Access Door with Leveling Feet
G = Keylock Panel and Access Door with Leveling Feet

Digit 17 — Motor

A = Free Discharge ECM
B = High Static ECM

Digit 18 — Coil

A = 2-Row Cooling/Heating[1]
B = 3-Row Cooling/Heating[1]
C = 4-Row Cooling/Heating[1]
D = 2-Row Cooling/1-Row Heating
E = 2-Row Cooling/2-Row Heating
F = 3-Row Cooling/1-Row Heating
G = 2-Row Cooling Only
H = 3-Row Cooling Only
J = 4-Row Cooling Only
K = 2-Row Cooling/Heating[1] with Electric Heat
L = 3-Row Cooling/Heating[1] with Electric Heat
M = 4-Row Cooling/Heating[1] with Electric Heat
P = 2-Row Cooling/Heating[1] with 1-Row Heating
Q = 2-Row Cooling/Heating[1] with 2-Row Heating
R = 3-Row Cooling/Heating[1] with 1-Row Heating
X = 2-Row Cooling Only, Electric Heat
Y = 3-Row Cooling Only, Electric Heat
Z = 4-Row Cooling Only, Electric Heat

Digit 19 — Drain Pan Material

3 = Polymer Drain Pan
4 = Stainless Steel Main Drain Pan

Digit 20 — Coil Air Vent

A = Automatic Air Vent
M = Manual Air Vent

Digits 21, 22, 23 — Electric Heat kW — ( ) = 208V Derate

000 = No Electric Heat
010 = 1.0 kW (0.75 kW)
015 = 1.5 kW (1.1 kW)
020 = 2.0 kW (1.5 kW)
025 = 2.5 kW (1.9 kW)
030 = 3.0 kW (2.3 kW)
040 = 4.0 kW (3.0 kW)
050 = 5.0 kW (3.8 kW)
060 = 6.0 kW (4.5 kW)
070 = 7.0 kW (5.3 kW)
080 = 8.0 kW (6.0 kW)
100 = 10.0 kW

Digit 24 — Reheat Coil

0 = None
A = Steam Coil
B = Hot Water Coil
D = High Capacity Hot Water Coil

Digit 25 — Disconnect Switch

0 = None
D = Disconnect Switch

Digit 26 — Filter

0 = None
1 = 1″ Throwaway Filter
2 = 1″ Throwaway MERV 8 Filter
3 = 1″ Throwaway, 1 Extra
4 = 1″ Throwaway MERV 8, 1 Extra
5 = 1″ Throwaway, 2 Extras
6 = 1″ Throwaway MERV 8, 2 Extras
7 = 1″ Throwaway, 3 Extras
8 = 1″ Throwaway MERV 8, 3 Extras
A = 1″ Throwaway MERV 13 Filter
B = 1″ Throwaway MERV 13, 1 Extra
C = 1″ Throwaway MERV 13, 2 Extras
D = 1″ Throwaway MERV 13, 3 Extras

Digit 27 — Main Control Valve

0 = None
A = 2-Way, 2-Position, NO (30 psig)
B = 3-Way, 2-Position, NO (28 psig)
C = 2-Way, 2-Position, NC (30 psig)
D = 3-Way, 2-Position, NC (20 psig)
E = 2-Way, 2-Position, NO (50 psig)
F = 3-Way, 2-Position, NO (28 psig)
G = 2-Way, 2-Position, NC (50 psig)
H = 3-Way, 2-Position, NC (28 psig)
J = 2-Way, Mod., 0.6 Cv (60 psig)
K = 3-Way, Mod., 0.6 Cv (60 psig)
L = 2-Way, Mod., 1.1 Cv (60 psig)
M = 3-Way, Mod., 1.1 Cv (60 psig)
N = 2-Way, Mod., 2.3 Cv (60 psig)
P = 3-Way, Mod., 2.7 Cv (60 psig)
Q = 2-Way, Mod., 3.3Cv (60 psig)
R = 3-Way, Mod., 3.8 Cv (60 psig)
X = Field-supplied, NO
Y = Field-supplied, NC
Z = Field-supplied 3-Wire Modulating
1 = Field supplied analog valve

Digit 28 — Auxiliary Control Valve

0 = None
A = 2-Way, 2-Position, NO (30 psig)
B = 3-Way, 2-Position, NC (28 psig)
C = 2-Way, 2-Position, NC (30 psig)
D = 3-Way, 2-Position, NC (20 psig)
E = 2-Way, 2-Position, NO (50 psig)
F = 3-Way, 2-Position, NO (28 psig)
G = 2-Way, 2-Position, NC (50 psig)
H = 3-Way, 2-Position, NC (28 psig)
J = 2-Way, Mod., 0.6 Cv (60 psig)
K = 3-Way, Mod., 0.6 Cv (60 psig)
L = 2-Way, Mod., 1.1 Cv (60 psig)
M = 3-Way, Mod., 1.1 Cv (60 psig)
N = 2-Way, Mod., 2.3 Cv (60 psig)
P = 3-Way, Mod., 2.7 Cv (60 psig)
Q = 2-Way, Mod., 3.3Cv (60 psig)
R = 3-Way, Mod., 3.8 Cv (60 psig)
X = Field-supplied, NO
Y = Field-supplied, NC
Z = Field-supplied 3-Wire Modulating
1 = Field supplied analog valve

Digit 29 — Piping Packages

0 = None
A = Basic Ball Valve Supply and Return
B = Basic Ball Valve Supply/Manual Circuit Setter
C = Basic Ball Valve Supply and Return with Auto Circuit Setter
D = Deluxe Ball Valve Supply and Return
E = Deluxe Ball Valve Supply/Manual Circuit Setter
F = Deluxe Ball Valve Supply and Return with Auto Circuit Setter

Digit 30 — Control Type

A = Fan Mode Switch
E = Tracer ZN010
F = Tracer ZN510
G = Tracer ZN520
H = Customer Supplied Terminal Interface (CSTI)
J = Tracer UC400, Single Zone VAV

Digit 31 — Control Option

D = Unit-Mounted Fan Mode Switch
K = Wall-Mounted Fan Mode Switch
V = Unit-Mounted Fan Speed Switch w/Setpoint Dial Zone Sensor
W = Wall-Mounted Fan Speed Switch w/Setpoint Dial Zone Sensor
X = Unit-Mounted Fan Speed Switch w/Wall-Mounted Setpoint Dial Zone Sensor
Y = Unit-Mounted Fan Speed Switch & Wall-Mounted Setpoint Dial w/Comm.
Z = Unit-Mounted Fan Speed Switch, On/Cancel, Setpoint Dial w/ Comm.
1 = Wall-Mounted On/Cancel w/ Comm.
2 = Wall-Mounted Fan Speed Switch, Setpoint Dial, On/Cancel w/ Comm.
0 = Without Control Option
3 = Unit-Mounted Low Voltage Fan Speed Switch (Off /Hi /Med /Low)
4 = Wall-Mounted Digital Zone Sensor (OALMH, Setpoint, On/Cancel, Comm Jack)
5 = Wall-Mounted Digital Zone Sensor (On/Cancel, Comm Jack)
6 = Wireless Zone Sensor
7 = Wireless Display Sensor, Unit-Mounted Receiver

Digit 32 — IAQ Options

0 = Without IAQ Options
1 = Dehumidification
4 = Dehumidification w/ Sensor

Digit 33 —FLA Motor Option

0 = Standard FLA ECM Mode
A = Reduced FLA ECM Mode

[1] Designates coils provided with a changeover sensor.

Digit 34

0 = None

Digit 35 — Control Function #3

0 = None
2 = Condensate Overflow Detection

Digit 36 — Control Function #4

0 = None
2 = Low Temperature Detection

Digits 37, 38 — Future Control Functions

Digit 39 — Projection Panels and Falsebacks

0 = None
A = 5/8″ Standard Recessed Panel (Vertical Recessed Units Only)
B = 2″ Projection Panel
C = 2.5″ Projection Panel
D = 3″ Projection Panel
E = 3.5″ Projection Panel
F = 4″ Projection Panel
G = 4.5″ Projection Panel
H = 5″ Projection Panel
J = 5.5″ Projection Panel
K = 6″ Projection Panel
L = 2″Falseback
M = 3″ Falseback
N = 4″ Falseback
P = 5″ Falseback
Q = 6″ Falseback
R = 7″ Falseback
T = 8″ Falseback

Digit 40 — Main Autoflow Gpm

0	=	None	H	=	3.5
A	=	0.5	J	=	4.0
B	=	0.75	K	=	4.5
C	=	1.0	L	=	5.0
D	=	1.5	M	=	6.0
E	=	2.0	N	=	7.0
F	=	2.5	P	=	8.0
G	=	3.0			

Digit 41 — Auxiliary Autoflow Gpm

0	=	None	H	=	3.5
A	=	0.5	J	=	4.0
B	=	0.75	K	=	4.5
C	=	1.0	L	=	5.0
D	=	1.5	M	=	6.0
E	=	2.0	N	=	7.0
F	=	2.5	P	=	8.0
G	=	3.0			

Digit 42 — Subbases

0 = None
A = 2″ Subbase
B = 3″ Subbase
C = 4″ Subbase
D = 5″ Subbase
E = 6″ Subbase
F = 7″ Subbase

Digit 43 — Recessed Flange

0 = None
A = Recessed Flange

Digit 44 — Wall Boxes

0 = None
A = Anodized Wall Box

General Information

UniTrane fan-coil and Force-Flo units are intended for single zone applications. These units have load capabilities of 200 to 1200 cfm. See Figure 1 for unit components. Fan-coil units are available as two-pipe, with or without electric heat (one hydronic circuit) or four-pipe (two hydronic circuits). Force-Flo units feature two-pipe hydronic, electric heat only, or steam only. Also, these units feature a variety of factory mounted piping packages.

Units with the three-speed fan switch only, are available with the switch mounted on the unit, or shipped separately, to be mounted in the occupied space. The unit mounted three-speed switch option can be ordered with a low voltage (24 vols AC) transformer and three fan speed relays. The three-speed switch option, which ships separately, comes with a low voltage (24 volt AC) transformer.

The Tracer ZN010, ZN510, ZN520, and UC400 controllers are included inside the units control box assembly. These controllers utilize analog signals from a unit-mounted control device or from a control device mounted in the occupied space.

The controls interface option, includes a 24 volt AC transformer, and an interface terminal board. Controls provided by an external source can be tied into the interface terminal board utilizing the integrated terminal block with 3mm screw connections.

Figure 1. UniTrane fan-coil unit components (vertical cabinet model is shown)

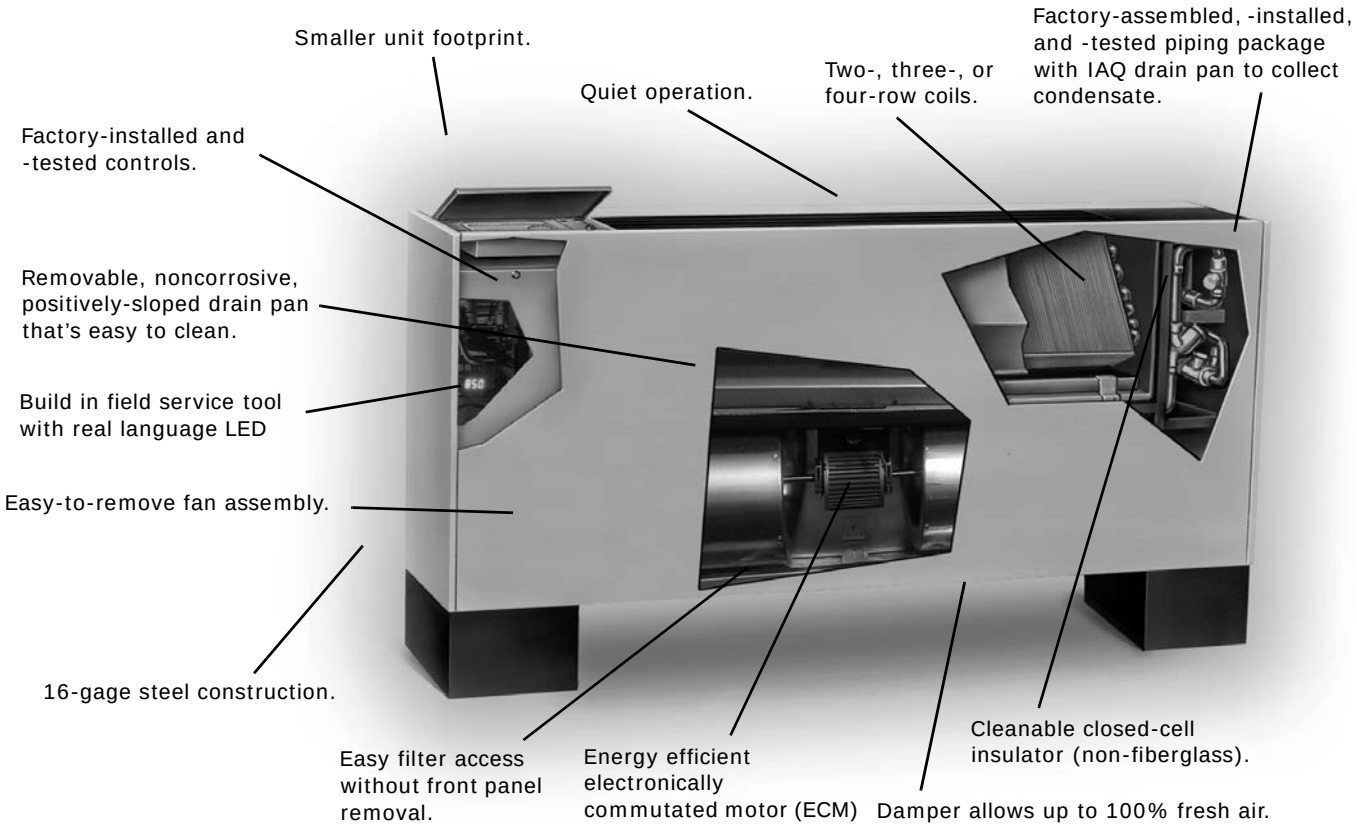

Pre-Installation

⚠WARNING

Hazardous Voltage w/Capacitors!

Disconnect all electric power, including remote disconnects and discharge all motor start/run capacitors before servicing. Follow proper lockout/tagout procedures to ensure the power cannot be inadvertently energized. For variable frequency drives or other energy storing components provided by Trane or others, refer to the appropriate manufacturer's literature for allowable waiting periods for discharge of capacitors. Verify with an appropriate voltmeter that all capacitors have discharged. Failure to disconnect power and discharge capacitors before servicing could result in death or serious injury.

For additional information regarding the safe discharge of capacitors, see PROD-SVB06A-EN

Receiving and Handling

Upon delivery, inspect all components for possible shipping damage. See "Receiving Checklist" (below) for detailed instructions. Trane recommends leaving units and accessories in their shipping packages/skids for protection and ease of handling until installation.

Shipping Package

UniTrane fan-coil and Force-Flo cabinet heaters ship in individual cartons for handling and storage ease. Each carton has tagging information such as the model number, sales order number, serial number, unit size, piping connections, and unit style to help properly locate the unit in the floor plan. If specified, the unit will ship with tagging designated by the customer.

Receiving Checklist

Complete the following checklist immediately after receiving unit shipment to detect possible shipping damage.

- ☐ Inspect individual cartons before accepting. Check for rattles, bent carton corners, or other visible indications of shipping damage.
- ☐ If a unit appears damaged, inspect it immediately before accepting the shipment. Manually rotate the fan wheel to ensure it turns freely. Make specific notations concerning the damage on the freight bill. Do not refuse delivery.
- ☐ Inspect the unit for concealed damage before it is stored and as soon as possible after delivery. Report concealed damage to the freight line within the allotted time after delivery. Check with the carrier for their allotted time to submit a claim.
- ☐ Do not move damaged material from the receiving location. It is the receiver's responsibility to provide reasonable evidence that concealed damage did not occur after delivery.
- ☐ Do not continue unpacking the shipment if it appears damaged. Retain all internal packing, cartons, and crate. Take photos of damaged material.
- ☐ Notify the carrier's terminal of the damage immediately by phone and mail. Request an immediate joint inspection of the damage by the carrier and consignee.
- ☐ Notify your Trane representative of the damage and arrange for repair. Have the carrier inspect the damage before making any repairs to the unit.
- ☐ Compare the electrical data on the unit nameplate with the ordering and shipping information to verify the correct unit is received.

Jobsite Storage

This unit is intended for indoor use only. Store the unit indoors to protect the unit from damage due to the elements. If indoor storage is not possible, make the following provisions for outdoor storage:

1. Place the unit(s) on a dry surface or raised off the ground to assure adequate air circulation beneath unit and to assure that no portion of the unit contacts standing water at any time.
2. **Cover the entire unit with a canvas tarp** only. **Do not** use clear, black or plastic tarps as they may cause excessive moisture condensation and equipment damage.

Installation Preparation

Before installing the unit, consider the following unit location recommendations to ensure proper unit operation.

1. Clearances: Allow adequate service and code clearances as recommended in "Service Access" (the next section). Position the unit and skid assembly in its final location.
2. Structural support: Ensure the structural support is strong enough to adequately support the unit. The installer is responsible for supply support rods for installation of ceiling units.
3. Level: Verify the floor or foundation is level. Shim or repair as necessary. To ensure proper unit operation, install the unit level (zero tolerance) in both horizontal axes. Failure to level the unit properly can result in condensate management problems, such as standing water inside the unit.
4. Condensate line & piping: Consider coil piping and condensate drain requirements. Verify condensate line

is continuously pitched 1 inch per 10 feet of condensate line run to adequately drain condensate.

5. Wall & ceiling openings: Vertical recessed/concealed units require wall/ceiling openings. Refer to submittal for specific dimensions before attempting to install. Horizontal recessed/concealed units must meet the requirements of the National Fire Protection Association (NFPA) Standard 90A or 90B concerning the use of concealed ceiling spaces as return air plenums. Refer to the submittal for specific dimensions of ceiling openings.
6. Exterior: Touch up painted panels if necessary. If panels need paint, sanding is not necessary. However, clean the surface of any oil, grease, or dirt residue so the paint will adhere. Purchase factory approved touch up epoxy paint from your local Trane Service Parts Center and apply.

Service Access

Service access is available from the front on vertical units and from the bottom on horizontal units. Cabinet and recessed units have removable front or bottom panels to allow access into the unit. See Figure 2, p. 11 for recommended service and operating clearances.

Figure 2. Recommended service clearances

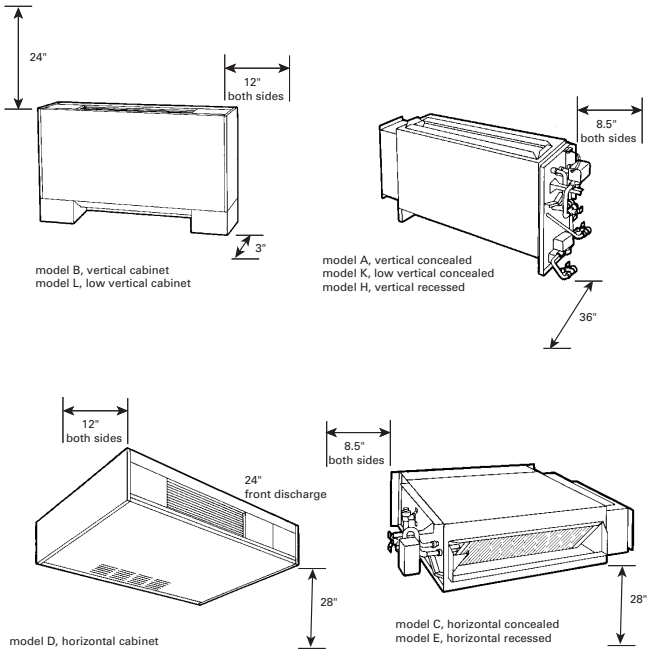

Units have either right or left hand piping. Reference piping locations by facing the front of the unit (airflow discharges from the front). The control panel is always on the end opposite the piping.

The fan board assembly and main drain pan are easily removable for cleaning. See "Maintenance," p. 106 for more details on servicing.

Pre-Installation Checklist

Complete the following checklist before beginning unit installation.

- ☐ Verify the unit size and tagging with the unit nameplate.
- ☐ Make certain the floor or foundation is level, solid, and sufficient to support the unit and accessory weights. See "Dimensions and Weights," p. 12. Level or repair the floor before positioning the unit if necessary.
- ☐ Allow minimum recommended clearances for routine maintenance and service. Refer to unit submittals for dimensions.
- ☐ Allow one and one half fan diameters above the unit before the discharge ductwork makes any turns.

Dimensions and Weights

Table 1. Fan-coil component data

Unit Size	02	03	04	06	08	10	12
Coil Data							
Face Area — ft^2	0.8	0.8	1.1	1.6	2.1	3.2	3.2
LxDxH — in.							
2-Row	15 x 1.7 x 8	15 x 1.7 x 8	20 x 1.7 x 8	29.5 x 1.7 x 8	38 x 1.7 x 8	57 x 1.7 x 8	57 x 1.7 x 8
3-Row	15 x 2.6 x 8	15 x 2.6 x 8	20 x 2.6 x 8	29.5 x 2.6 x 8	38 x 2.6 x 8	57 x 2.6 x 8	57 x 2.6 x 8
4-Row	15 x 3.5 x 8	15 x 3.5 x 8	20 x 3.5 x 8	29.5 x 3.5 x 8	38 x 3.5 x 8	57 x 3.5 x 8	57 x 3.5 x 8
Volume — gal							
1-Row (Heat)	0.06	0.06	0.08	0.11	0.14	0.21	0.21
2-Row	0.12	0.12	0.15	0.22	0.28	0.42	0.42
3-Row	0.18	0.18	0.23	0.33	0.42	0.62	0.62
4-Row	0.24	0.24	0.30	0.44	0.56	0.83	0.83
Fins/ft							
2-Row	144	144	144	144	144	144	144
3-Row	144	144	144	144	144	144	144
4-Row	144	144	144	144	144	144	144
Reheat Coil Data (1-Row), Standard or High-Capacity[a]							
Hot Water or Steam							
Face Area — ft^2	0.6	0.6	0.8	1.2	1.6	2.4	2.4
L x D x H — in.	15 x 1.5 x 6	15 x 1.5 x 6	20 x 1.5 x 6	29.5 x 1.5 x 6	38 x 1.5 x 6	57 x 1.5 x 6	57 x 1.5 x 6
Volume — gal	0.12	0.12	0.15	0.22	0.28	0.42	0.42
Standard Capacity[a] Fins/ft	48	48	48	48	48	48	48
High-Capacity[a] Fins/ft	144	144	144	144	144	144	144
Fan/Motor Data							
Fan Quantity	1	1	1	2	2	3	3
Size — Dia" x Width"	6.31 x 4	6.31 x 6.5	6.31 x 7.5	6.31 x 6.5	6.31 x 7.5	(1) 6.31 x 7.5	6.31 x 7.5
Size — Dia" x Width"						(2) 6.31 x 6.5	
Motor Quantity	1	1	1	1	1	2	2
Filter Data							
1" TA and Pl. Media							
Quantity	1	1	1	1	1	1	1
Size — in.	8-7/8 x 19-1/8	8-7/8 x 19-1/8	8-7/8 x 24-1/8	8-7/8 x 33-5/8	8-7/8 x 42-1/8	8-7/8 x 61-1/8	8-7/8 x 61-1/8
1" Fresh Air Filter (only on cabinet styles D, E, and H with bottom return and fresh air opening)							
Quantity	1	1	1	1	1	1	1
Size — in	5-1/2 x 19-1/8	5-1/2 x 19-1/8	5-1/2 x 24-1/8	5-1/2 x 33-5/8	5-/2 x 42-1/8	5-1/2 x 61-1/8	5-1/2 x 61-1/8

(a) Standard and high-capacity reheat coils share the same component data except that standard capacity reheat coils have 48 fins/ft (1.6 fins/cm) while high-capacity reheat coils have 144 fins/ft (4.7 fins/cm).

Table 2. Low vertical fan-coil component data

Unit Size	03	04	06
Coil Data			
Face Area — ft^2	1.1	1.6	2.1
L x D x H — in.			
2-Row	20 x 1.7 x 8	29.5 x 1.7 x 8	38 x 1.7 x 8
3-Row	20 x 2.6 x 8	29.5 x 2.6 x 8	38 x 2.6 x 8
Volume — gal			
1-Row (Heat)	0.08	0.11	0.14
2-Row	0.15	0.22	0.28
3-Row	0.23	0.33	0.42
Fins/ft			
2-Row	144	144	144
3-Row	144	144	144
Fan/Motor Data			
Fan Quantity	1	1	1
Size — Dia”x Width”	5 x 23	5 x 32	5 x 41
Motor Quantity	1	1	1
Filter Data			
1” (2.5 cm) TA			
Quantity	1	1	1
Size — in.	8-7/8 x 24-1/8	8-7/8 x 33-5/8	8-7/8 x 42-1/8

Available Models

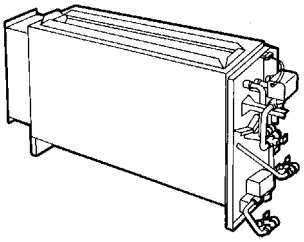

Model A:
Vertical Concealed

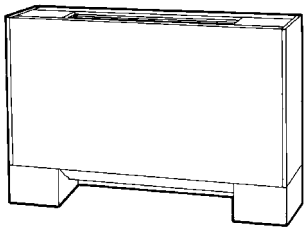

Model B:
Vertical Short

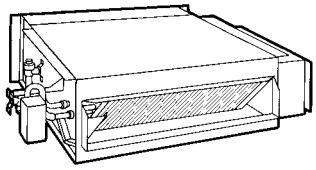

Model C:
Horizontal Concealed

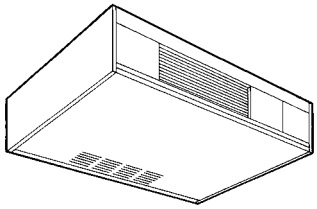

Model D:
Horizontal Cabinet

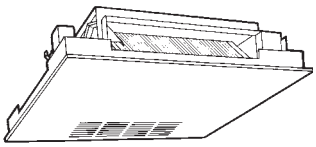

Model E:
Horizontal Recessed

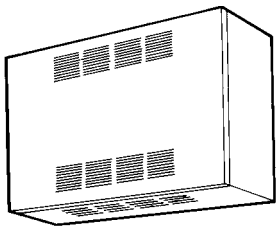

Model F:
Wall Hung Cabinet
(Force-Flo units only)

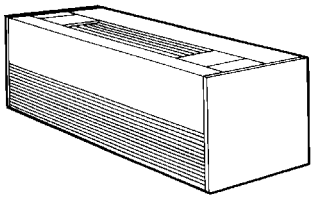

Model L:
Low Vertical Concealed

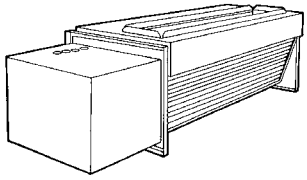

Model K:
Low Vertical Cabinet

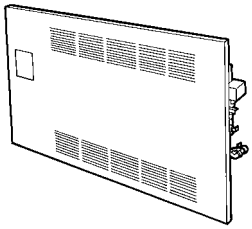

Model H:
Vertical Recessed

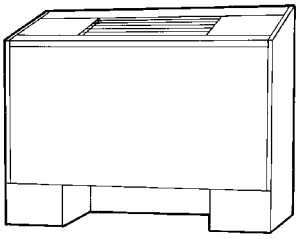

Model J:
Slope-Top Cabinet

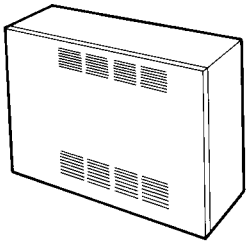

Model M:
Inverted Vertical Cabinet
(Force-Flo units only)

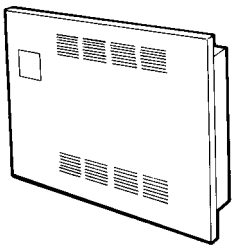

Model N:
Inverted Vertical Recessed
(Force-Flo units only)

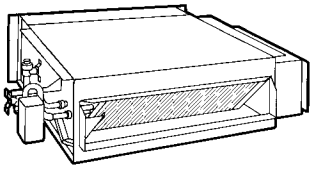

Model P:
Compact Concealed

Factory-Installed Piping Packages

Digits 27,28	Digit 29		
Main/Aux. Control Valve	Basic (A)	Circuit Setter (B)	Auto Circuit Setter (C)
BASIC			
None 0	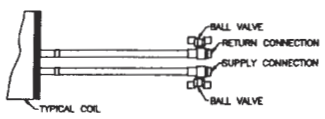	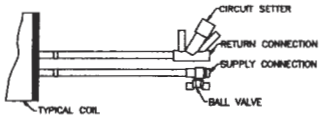	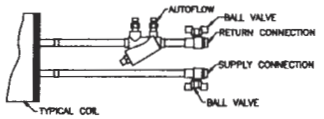
2-Way A, C, E, G, J, L, N, Q	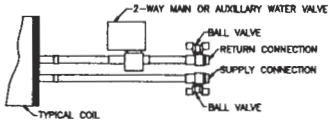	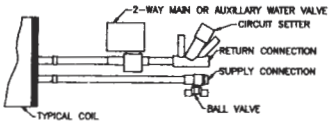	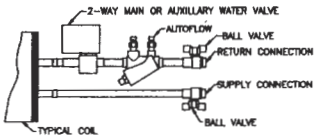
3-Way B, D, F, H, K, M, P, R	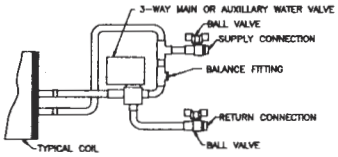	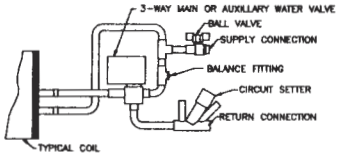	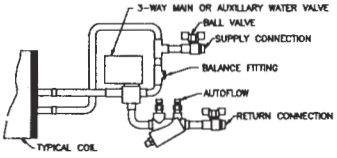

DELUXE	(D)	(E)	(F)
None 0	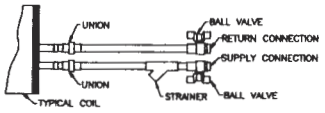	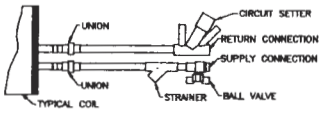	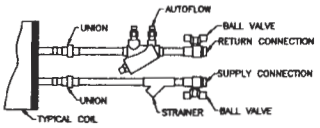
2-Way A, C, E, G, J, L, N, Q	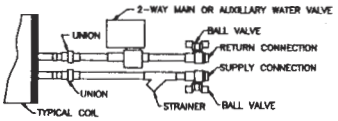	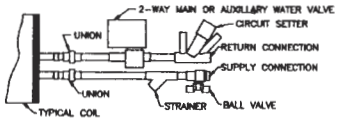	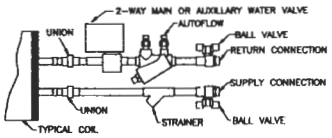
3-Way B, D, F, H, K, M, P, R	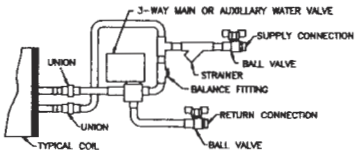	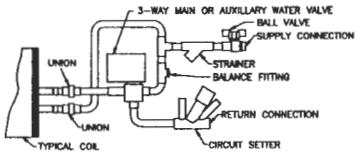	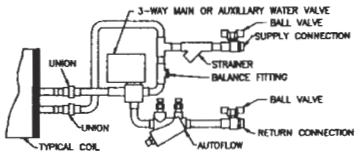

Note: *This figure shows piping package components and basic arrangement. It is not an accurate pictorial of what factory-installed piping packages look like.*

Vertical Concealed, Model A

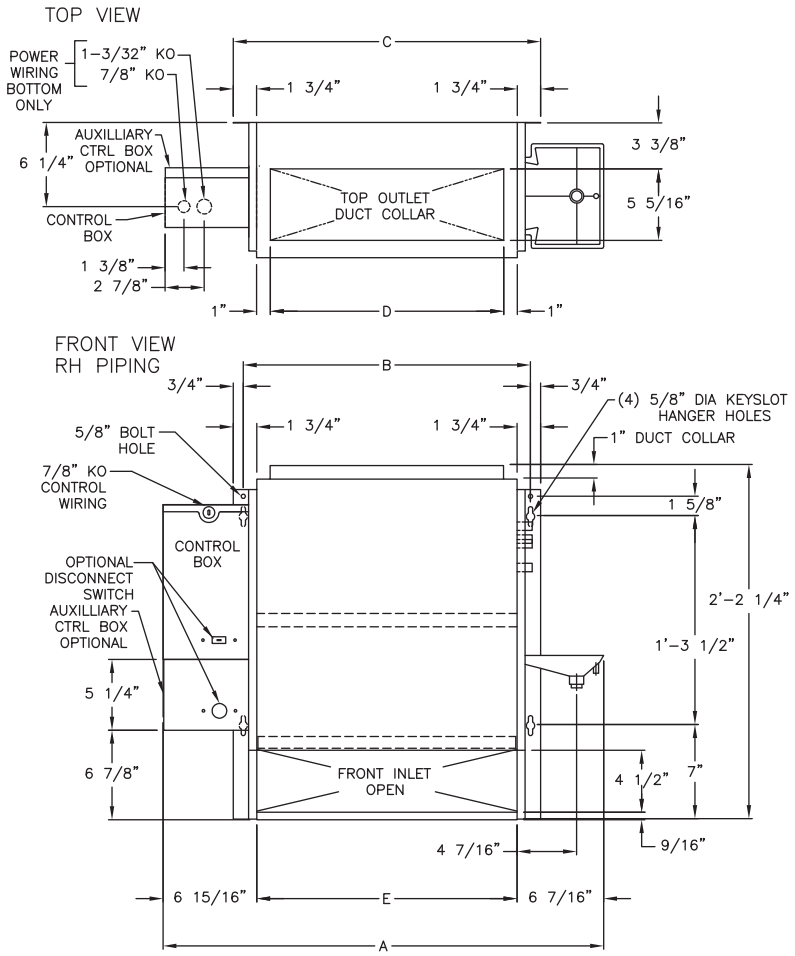

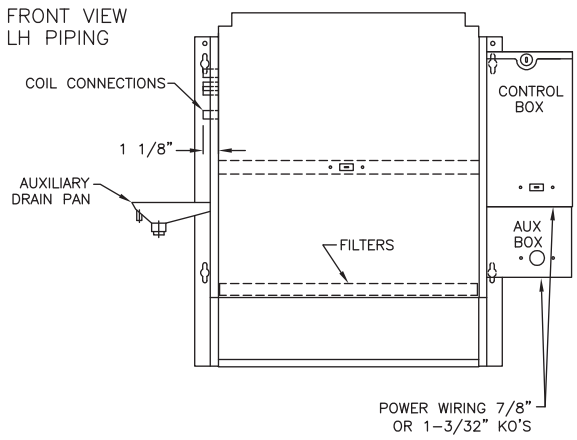

Vertical Concealed Unit

Unit Size	200-300	400	600	800	1000-1200
No. of Fans	1	1	2	2	3
No. of Motors	1	1	1	1	2
A	2'-8 11/16"	3'-1 11/16"	3'-11 3/16"	4'-7 11/16"	6'-2 11/16"
B	1'-9 5/16"	2'-2 5/16"	2'-11 13/16"	3'-8 5/16"	5'-3 5/16"
C	1'-10 13/16"	2'-3 13/16"	3'-1 5/16"	3'-9 13/16"	5'-4 13/16"
D	1'-5 5/16"	1'-10 5/16"	2'-7 13/16"	3'-4 5/16"	4'-11 5/16"
E	1'-7 5/16"	2'-0 5/16"	2'-9 13/16"	3'-6 5/16"	5'-1 5/16"

Notes:
1. Coil connections are always on the drain pan side and opposite the control box.
2. Coil connections are 5/8" O.D. sweat. See p. 29 and p. 30 for locations.
3. All duct collar dimensions are to the outside of the collar.
4. See p. 33 for dimensions for outside air openings.

Vertical Cabinet, Model B

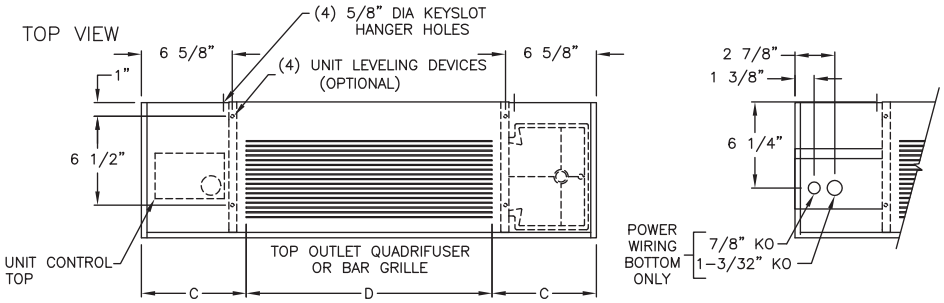

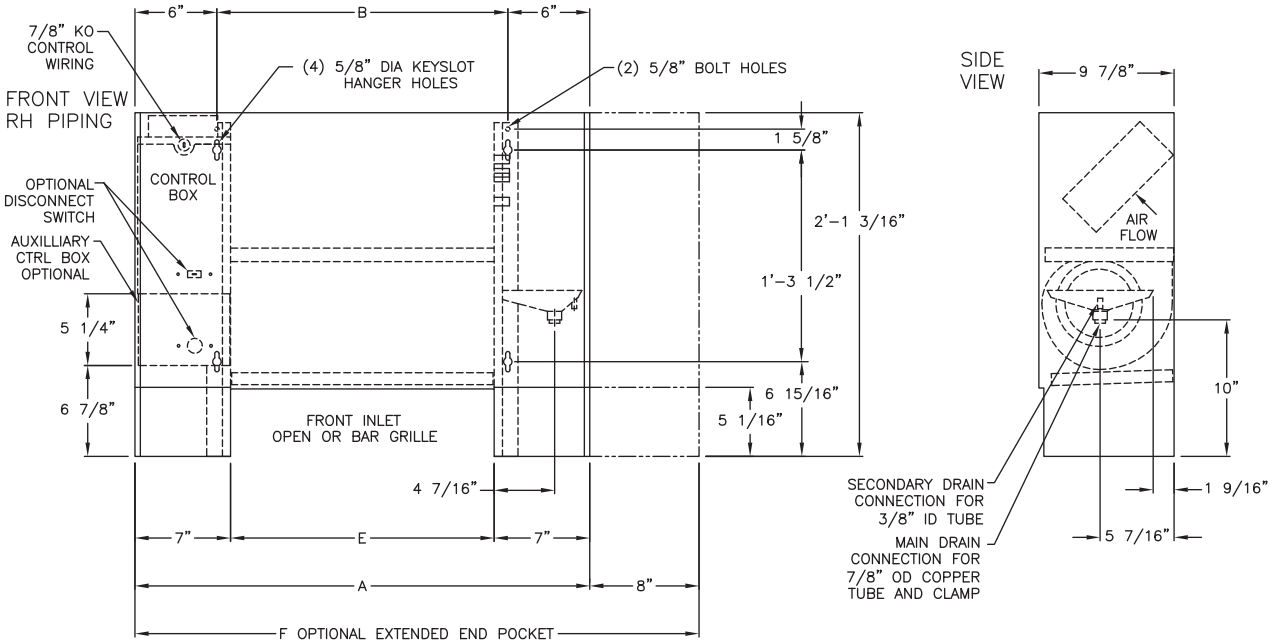

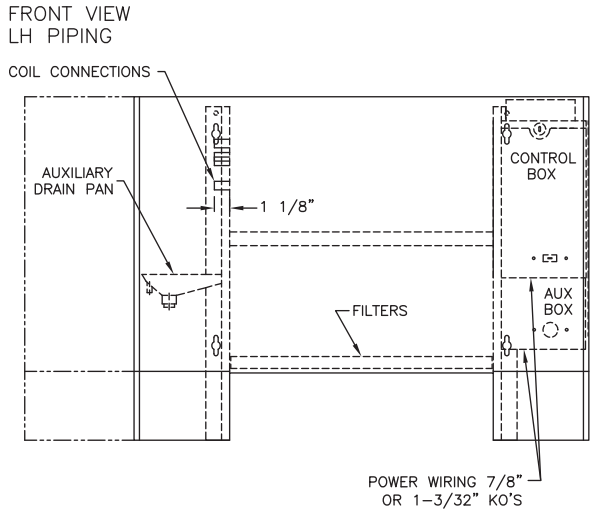

Vertical Cabinet Unit

Unit Size	200-300	400	600	800	1000-1200
No. of Fans	1	1	2	2	3
No. of Motors	1	1	1	1	2
A	2'-9 5/16"	3'-2 5/16"	3'-11 13/16"	4'-8 5/16"	6'-3 5/16"
B	1'-9 5/16"	2'-2 5/16"	2'-11 13/16"	3'-8 5/16"	5'-3 5/16"
C	7 5/8"	7 1/8"	8 7/8"	7 1/8"	7 5/8"
D	1'-16"	2'-0"	2'-6"	3'-6"	5'-0"
E	1'-7 5/16"	2'-0 5/16"	2'-9 13/16"	3'-6 5/16"	5'-1 5/16"
F	3'-5 5/16"	3'-10 5/16"	4'-7 13/16"	5'-4 5/16"	6'-11 5/16"

Notes:
1. Coil connections are always on the drain pan side and opposite the control box and unit control.
2. Coil connections are 5/8" O.D. sweat. See p. 29 and p. 30 for locations.
3. See p. 33 for dimensions for outside air openings.

Horizontal Concealed, Model C

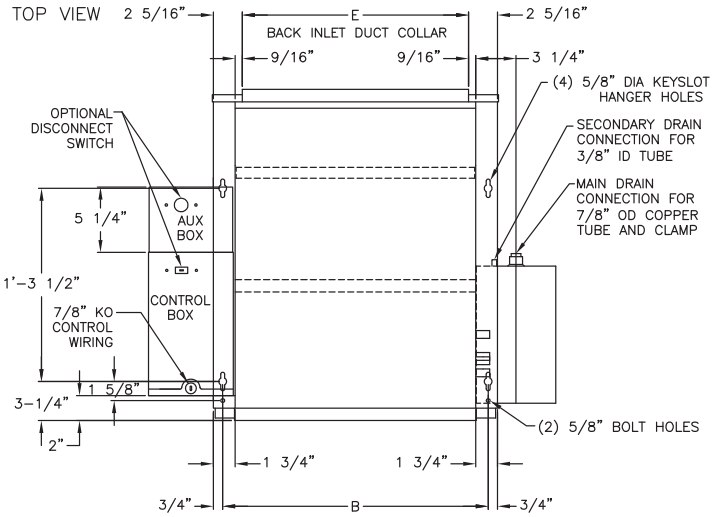

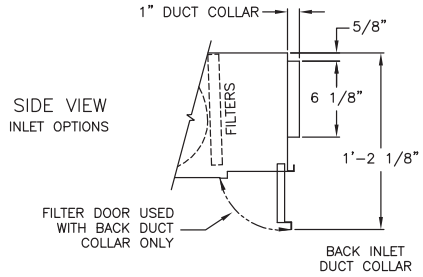

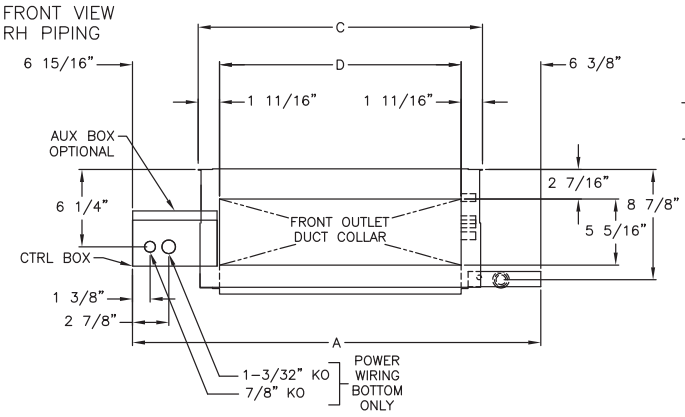

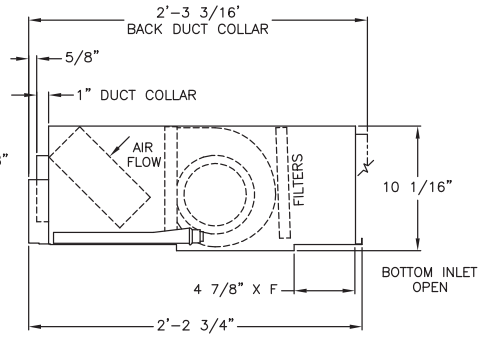

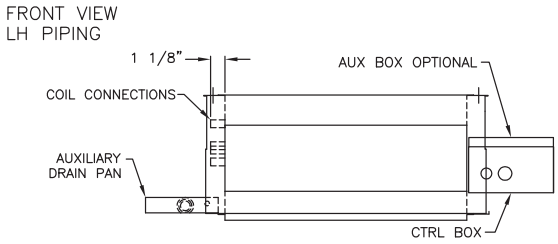

Horizontal Concealed Unit Dimensions (in.) and Weights (lb)

Unit Size	200-300	400	600	800	1000-1200
No. of Fans	1	1	2	2	3
No. of Motors	1	1	1	1	2
A	2'-8 11/16"	3'-1 11/16"	3'-11 3/16"	4'-7 11/16"	6'-2 11/16"
B	1'-9 5/16"	2'-2 5/16"	2'-11 13/16"	3'-8 5/16"	5'-3 5/16"
C	1'-10 13/16"	2'-3 13/16"	3'-1 5/16"	3'-9 13/16"	5'-4 13/16"
D	1'-7 3/8"	2'-0 3/8"	2'-9 7/8"	3'-6 3/8"	5'-1 3/8"
E	1'-6 1/8"	1'-11 1/8"	2'-8 5/8"	3'-5 1/8"	5'-0 1/8"
F	1'-7 5/16"	2'-0 5/16"	2'-9 13/16"	3'-6 5/16"	5'-1 5/16"

Notes:
1. Coil connections are always on the drain pan side and opposite the control box.
2. Coil connections are 5/8" O.D. sweat. See p. 29 and p. 30 for locations.
3. All duct collar dimensions are to the outside of the collar.
4. See p. 32 for dimensions for outside air openings.

Horizontal Cabinet, Model D

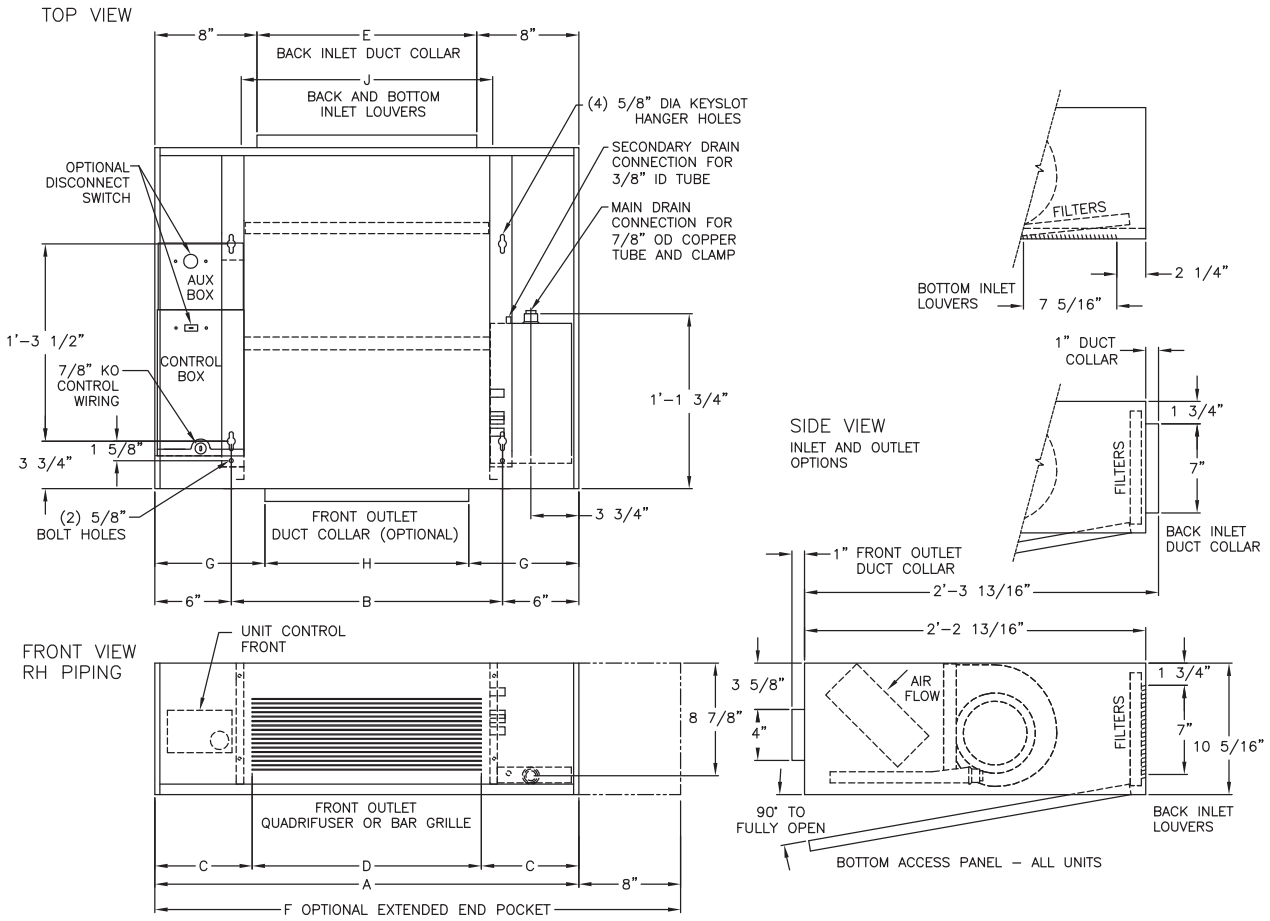

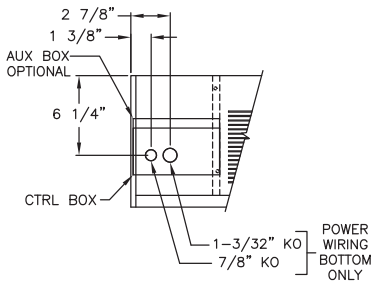

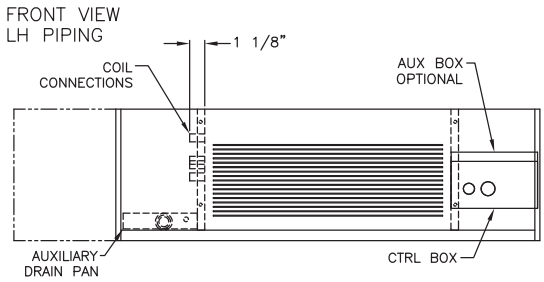

Horizontal Cabinet Unit

Unit Size	200-300	400	600	800	1000-1200
No. of Fans	1	1	2	2	3
No. of Motors	1	1	1	1	2
A	2'-9 5/16"	3'-2 5/16"	3'-11 3/16"	4'-8 5/16"	6'-3 5/16"
B	1'-9 5/16"	2'-2 5/16"	2'-11 13/16"	3'-8 5/16"	5'-3 5/16"
C	7 5/8"	7 1/8"	8 7/8"	7 1/8"	7 5/8"
D	1'-6"	2'-0"	2'-6"	3'-6"	5'-0"
E	1'-5 1/4"	1'-10 1/4"	2'-7 3/4"	3'-4 1/4"	3'-4 1/4"
F	3'-5 1/4"	3'-10 5/16"	4'-7 3/16"	5'-4 5/16"	6'-11 5/16"
G	8-5/8"	8-1/8"	9-7/8"	8-1/8"	8-5/8"
H	1'-4"	1'-10"	2'-4"	3'-4"	4'-10"
J	1'-7 3/4"	1'-11 3/4"	2'-7 3/4"	3'-3 3/4"	4'-11 3/4"

Notes:
1. Coil connections are always on the drain pan side and opposite the control box.
2. Coil connections are 5/8" O.D. sweat. See p. 29 and p. 30 for locations.
3. All duct collar dimensions are to the outside of the collar.
4. See p. 32 for dimensions for outside air openings.

Horizontal Recessed, Model E

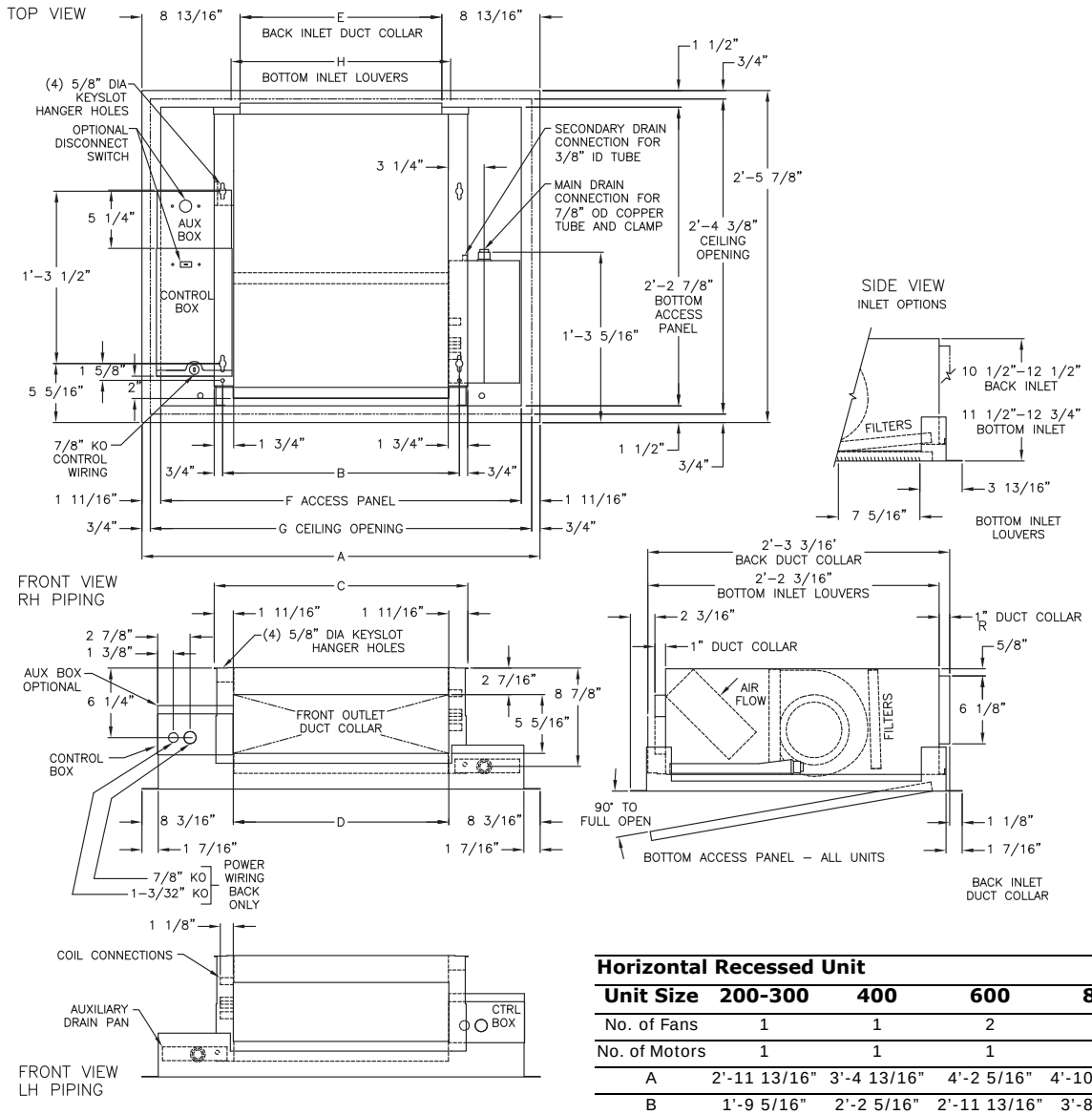

NOTE:

1. COIL CONNECTIONS ARE ALWAYS ON THE DRAIN PAN SIDE AND OPPOSITE THE CONTROL BOX.
2. COIL CONNECTIONS ARE 5/8" O.D. SWEAT. SEE PAGES XXXXX FOR LOCATIONS.
3. ALL DUCT COLLAR DIMENSIONS ARE TO THE OUTSIDE OF THE COLLAR.
4. SEE PAGES XXXXXX FOR DIMENSIONS FOR OUTSIDE AIR OPENINGS.

Horizontal Recessed Unit

Unit Size	200-300	400	600	800	1000-1200
No. of Fans	1	1	2	2	3
No. of Motors	1	1	1	1	2
A	2'-11 13/16"	3'-4 13/16"	4'-2 5/16"	4'-10 13/16"	6'-5 13/16"
B	1'-9 5/16"	2'-2 5/16"	2'-11 13/16"	3'-8 5/16"	5'-3 5/16"
C	1'-10 13/16"	2'-3 13/16"	3'-1 5/16"	3'-9 13/16"	5'-4 13/16"
D	1'-7 3/8"	2'-0 3/8"	2'-9 7/8"	3'-6 3/8"	5'-1 3/8"
E	1'-6 1/8"	1'-11 1/8"	2'-8 5/8"	3'-5 1/8"	5'-0 1/8"
F	2'-8 7/16"	3'-1 7/16"	3'-10 15/16"	4'-7 7/16"	6'-2 7/16"
G	2'-10 5/16"	3'-3 5/16"	4'-0 13/16"	4'-9 5/16"	6'-4 5/16"
H	1'-7 3/4"	1'-11 3/4"	2'-7 3/4"	3'-3 3/4"	4'-11 3/4"

Notes:

1. Coil connections are always on the drain pan side.
2. Coil connections are 5/8" O.D. sweat. See p. 29 and p. 30 for locations.
3. All duct collar dimensions are to the outside of the collar.
4. See p. 32 for dimensions for outside air openings.

Vertical Wall Hung Cabinet, Model F (Force-Flo Units Only)

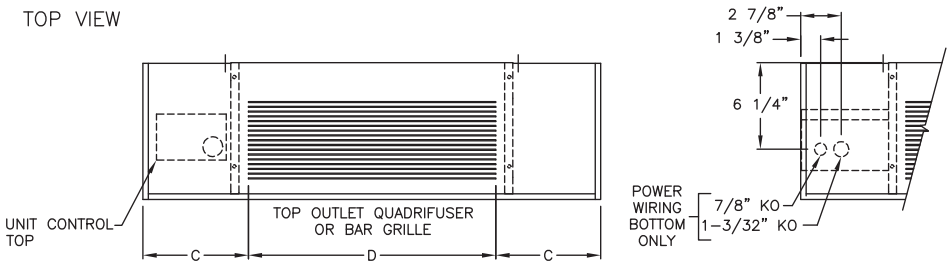

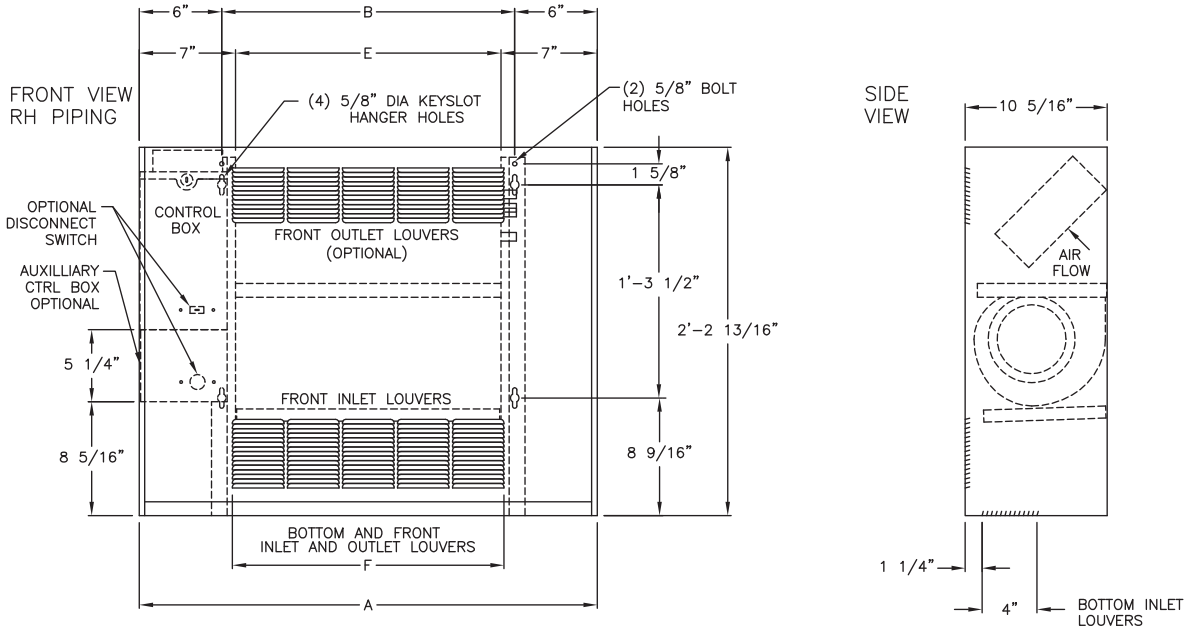

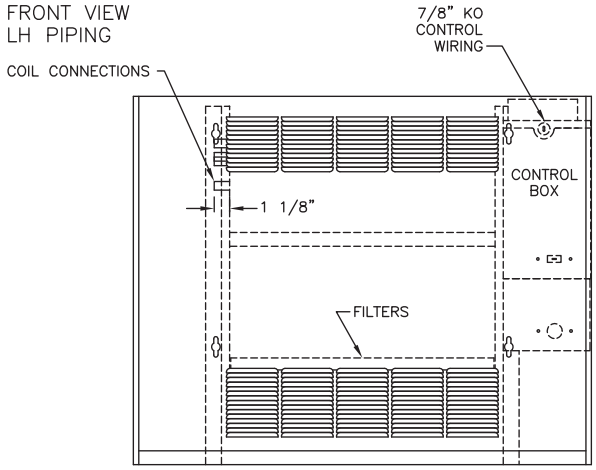

Vertical Wall Hung Cabinet Unit

Unit Size	200-300	400	600	800	1000-1200
No. of Fans	**1**	**1**	**2**	**2**	**3**
No. of Motors	**1**	**1**	**1**	**1**	**2**
A	2'-9 5/16"	3'-2 5/16"	3'-11 13/16"	4'-8 5/16"	6'-3 5/16"
B	1'-9 5/16"	2'-2 5/16"	2'-11 13/16"	3'-8 5/16"	5'-3 5/16"
C	7 5/8"	7 1/8"	8 7/8"	7 1/8"	7 5/8"
D	1'-6"	2'-0"	2'-6"	3'-6"	5'-0"
E	1'-7 5/16"	2'-0 5/16"	2'-9 13/16"	3'-6 5/16"	5'-1 5/16"
F	1'-7 3/4"	1'-11 3/4"	2'-7 3/4"	3'-3 3/4"	4'-11 3/4"

Notes:
1. Coil connections are always opposite the control box side.
2. Coil connections are 5/8" O.D. sweat. See p. 29 and p. 30 for locations.
3. All duct collar dimensions are to the outside of the collar.
4. See p. 33 for dimensions for outside air openings.

Vertical Recessed, Model H

Vertical Recessed Unit					
Unit Size	**200-300**	**400**	**600**	**800**	**1000-1200**
No. of Fans	1	1	2	2	3
No. of Motors	1	1	1	1	2
A	2'-8 11/16"	3'-1 11/16"	3'-11 3/16"	4'-7 11/16"	6'-2 11/16"
B	1'-9 5/16"	2'-2 5/16"	2'-11 13/16"	3'-8 5/16"	5'-3 5/16"
C	1'-10 13/16"	2'-3 13/16"	3'-1 5/16"	3'-9 13/16"	5'-4 13/16"
D	1'-5 5/16"	1'-10 5/16"	2'-7 13/16"	3'-4 5/16"	4'-11 5/16"
E	3'-11"	4'-3"	5'-3"	5'-5 1/2"	7'-5 1/2"
F	2'-6"	2'-6"	2'-6"	2'-9 1/2"	2'-9 1/2"
G	2 3/8"	2 3/8"	2 3/8"	4 1/8"	4 1/8"
H	3'-6"	4'-0"	4'-9"	5'-3"	7'-3"
J	2'-2 1/2"	2'-2 1/2"	2'-2 1/2"	2'-3 1/2"	2'-3 1/2"

Notes:
1. Coil connections are always on the drain pan side and opposite the control box.
2. Coil connections are 5/8" O.D. sweat. See p. 29 and p. 30 for locations.
3. All duct collar dimensions are to the outside of the collar.
4. See p. 33 for dimensions for outside air openings.

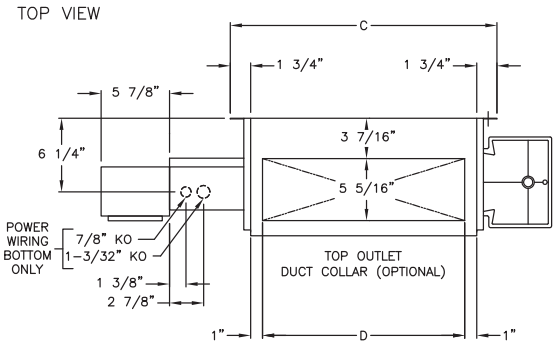

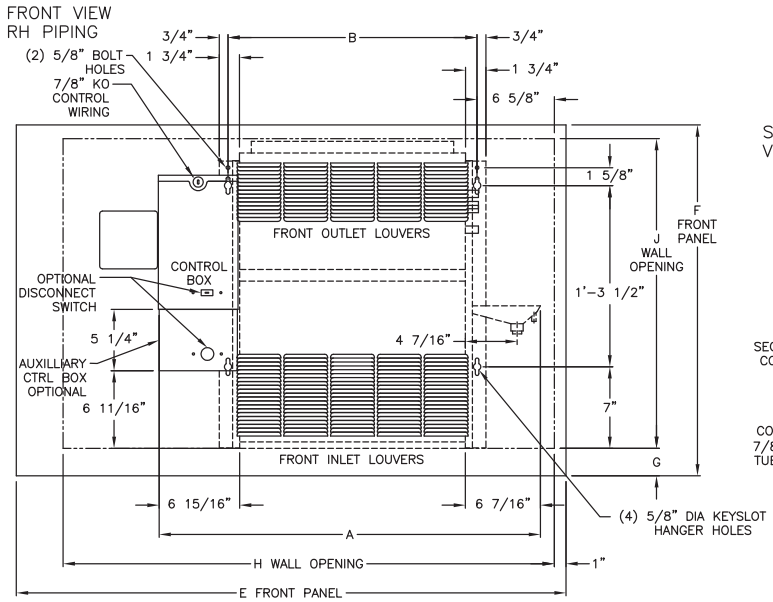

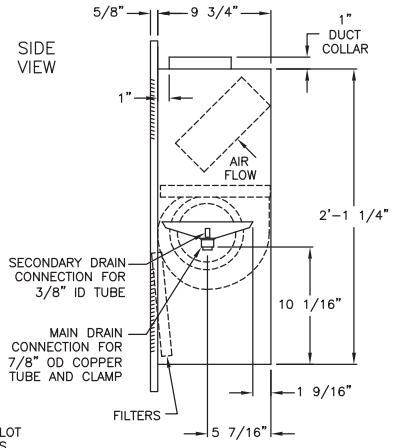

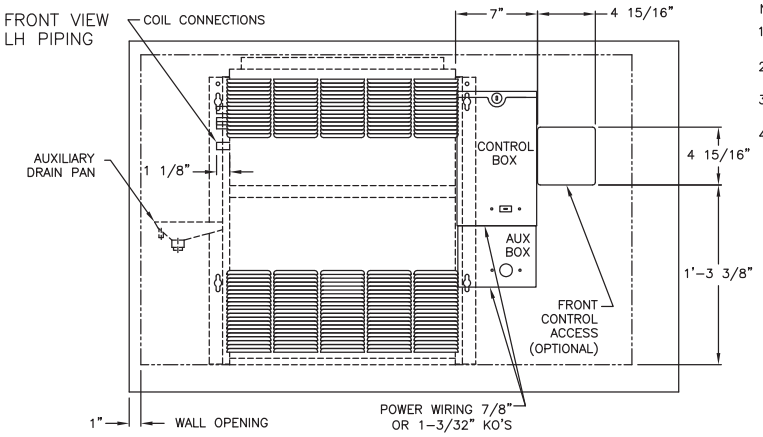

NOTE:
1. COIL CONNECTIONS ARE ALWAYS ON THE DRAIN PAN SIDE AND OPPOSITE THE CONTROL BOX.
2. COIL CONNECTIONS ARE 5/8" O.D. SWEAT. SEE PAGES XXXXX FOR LOCATIONS.
3. ALL DUCT COLLAR DIMENSIONS ARE TO THE OUTSIDE OF THE COLLAR.
4. SEE PAGES XXXXXX FOR DIMENSIONS FOR OUTSIDE AIR OPENINGS.

Vertical Slope Top, Model J

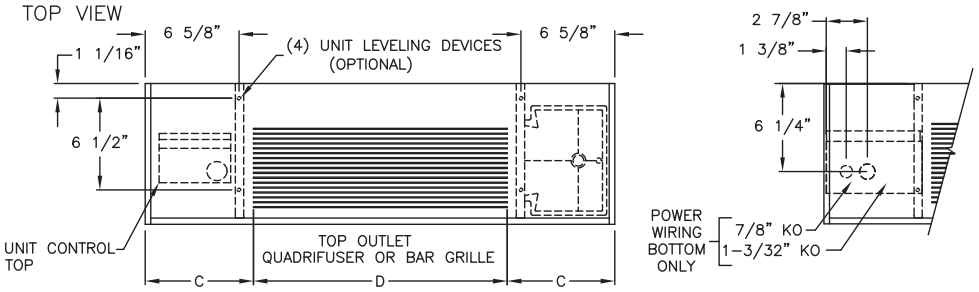

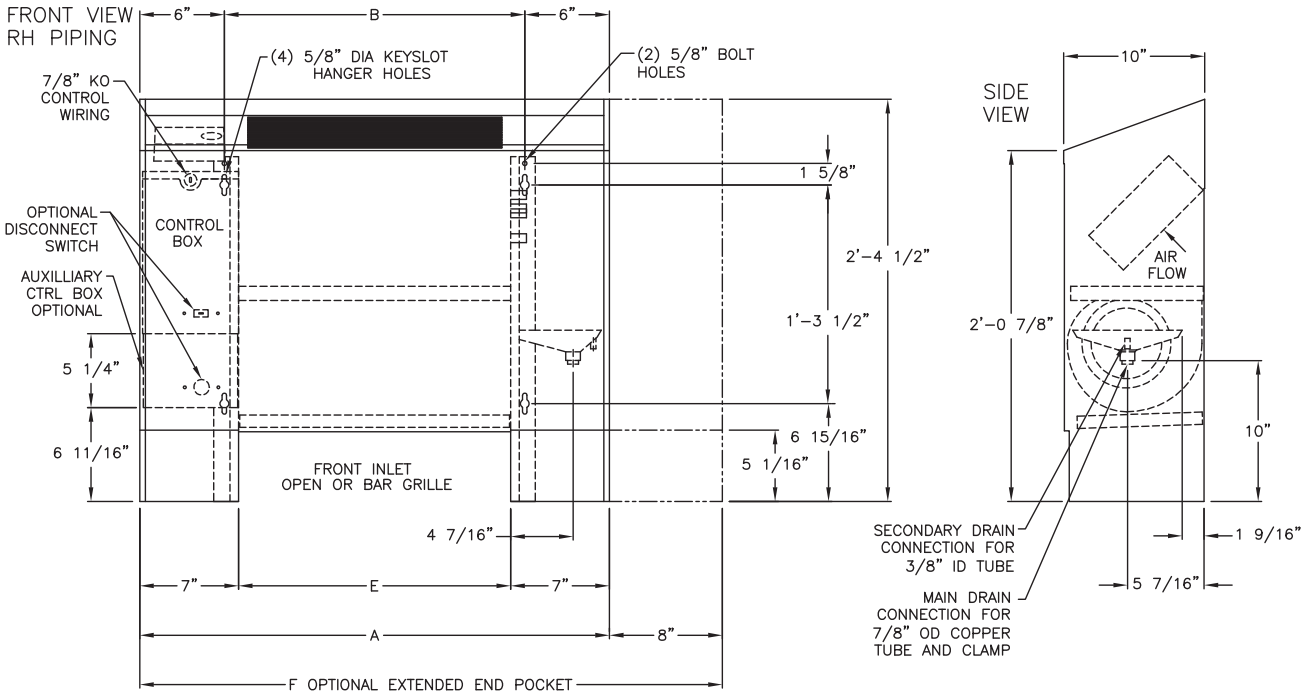

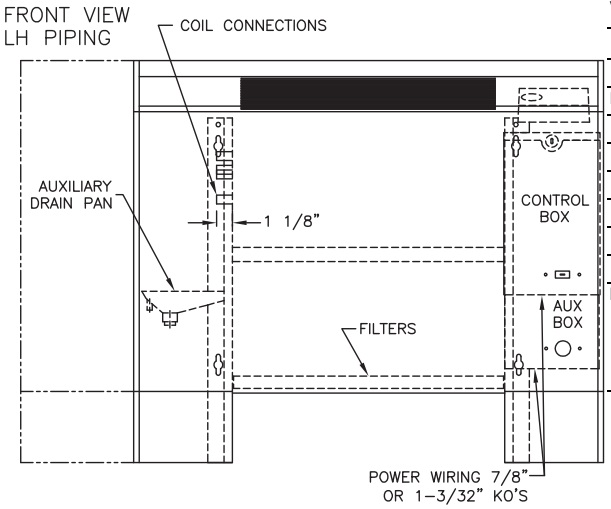

Vertical Slope Top Unit

Unit Size	200-300	400	600	800	1000-1200
No. of Fans	1	1	2	2	3
No. of Motors	1	1	1	1	2
A	2'-9 5/16"	3'-2 5/16"	3'-11 13/16"	4'-8 5/16"	6'-3 5/16"
B	1'-9 5/16"	2'-2 5/16"	2'-11 13/16"	3'-8 5/16"	5'-3 5/16"
C	7 5/8"	7 1/8"	8 7/8"	7 1/8"	7 5/8"
D	1'-6"	2'-0"	2'-6"	3'-6"	5'-0"
E	1'-7 5/16"	2'-0 5/16"	2'-9 13/16"	3'-6 5/16"	5'-1 5/16"
F	3'-5 5/16"	3'-10 5/16"	4'-7 13/16"	5'-4 5/16"	6'-11 5/16"

Notes:
1. Coil connections are always on the drain pan side and opposite the control box and unit control.
2. Coil connections are 5/8" O.D. sweat. See p. 29 and p. 30 for locations.
3. See p. 33 for dimensions for outside air openings.

Low Vertical Concealed, Model K

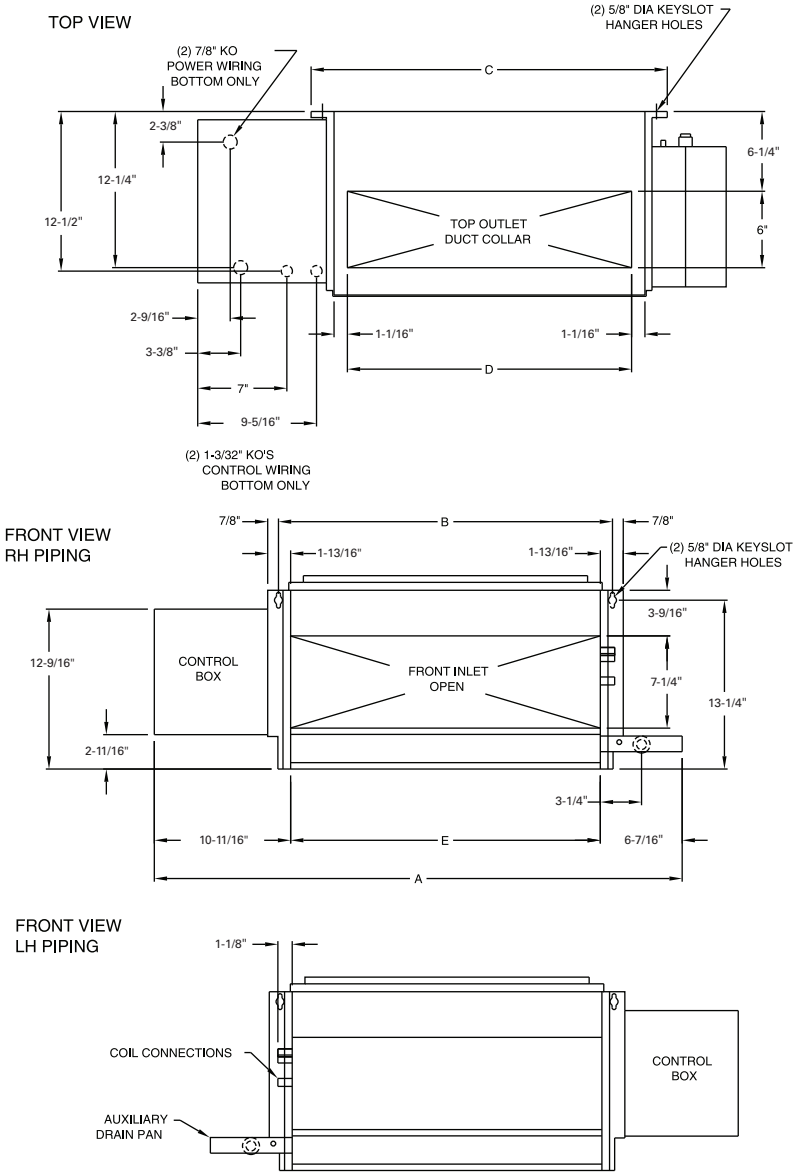

Low Vertical Concealed Unit Dimensions (in.) and Weights (lb)

Unit Size	03	04	06
A	41-7/16”	50-15/16”	59-7/16”
B	26-1/4”	35-3/4”	44-1/4”
C	27-15/16”	36-13/16”	45-15/16”
D	22-5/16”	31-13/16”	40-5/16”
E	24-1/4”	339-3/4”	42-1/4”
Operating Weight	109	139	147
Shipping Weight	96	123	131

Notes:

1. Coil connections are always on the drain pan side and opposite the control box.
2. Coil connections are 5/8” O.D. sweat.
3. All duct collar dimensions are to the outside of the collar.
4. See p. 33 for dimensions for outside air openings.
5. Serviceability for some components within this unit may require panel or drain pan removal.

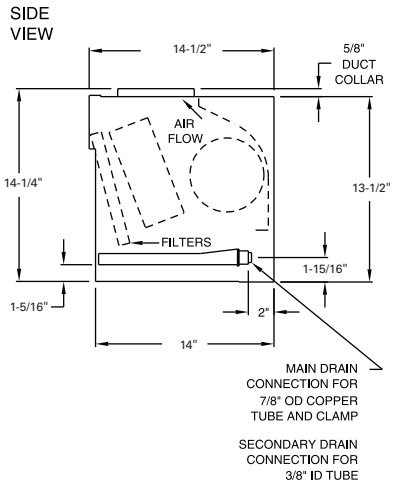

Low Vertical Cabinet, Model L

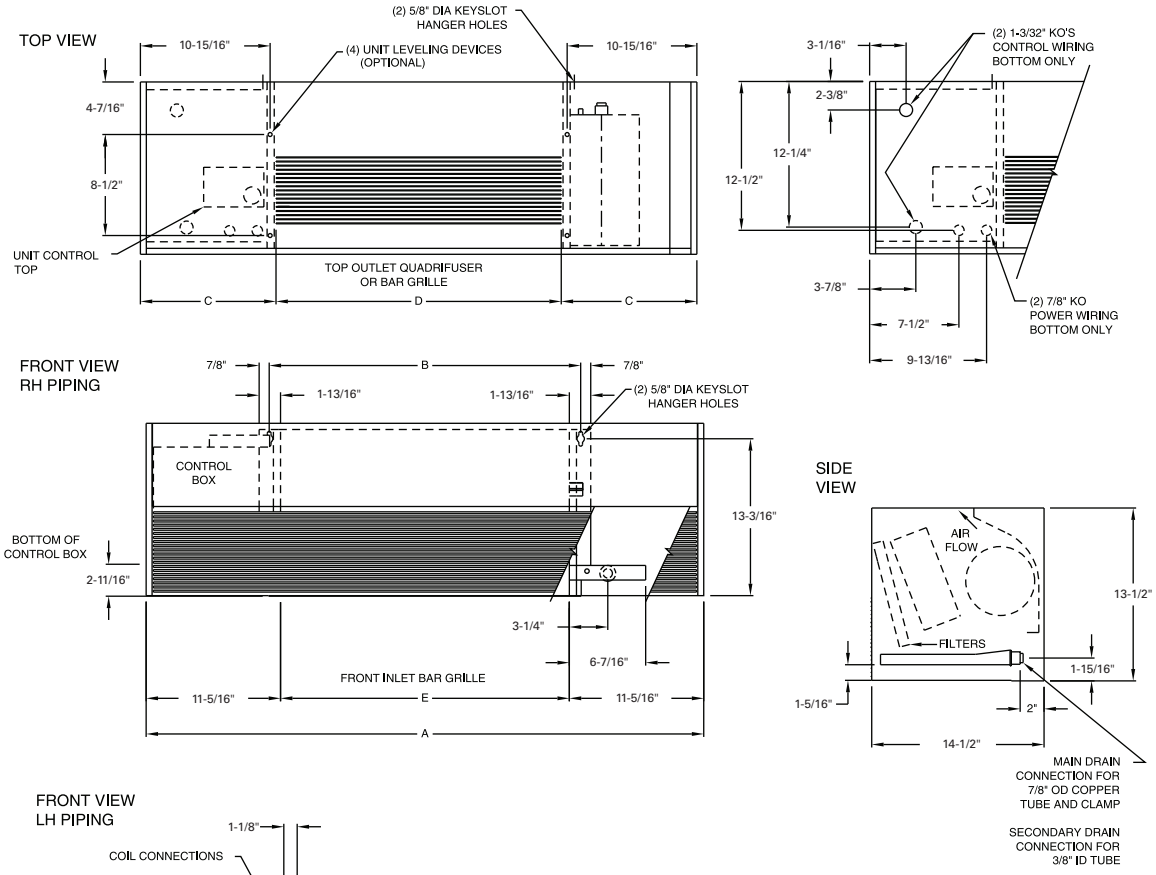

Low Vertical Cabinet Unit Dimensions (in.) and Weights (lb)

Unit Size	03	04	06
A	46-15/16”	56-7/16”	64-15/16”
B	26-1/4”	35-3/4”	44-1/4”
C	11-7/16”	13-5/16”	11-7/16”
D	24”	30”	42”
E	24-1/4”	33-3/4”	42-1/4”
Operating Weight	125	155	164
Shipping Weight	112	139	148

Notes:

1. Coil connections are always on the drain pan side and opposite the control box.
2. Coil connections are 5/8” O.D. sweat.
3. All duct collar dimensions are to the outside of the collar.
4. See p. 33 for dimensions for outside air openings.
5. Serviceability for some components within this unit may require panel or drain pan removal.

Inverted Vertical Cabinet, Model M (Force-Flo Units Only)

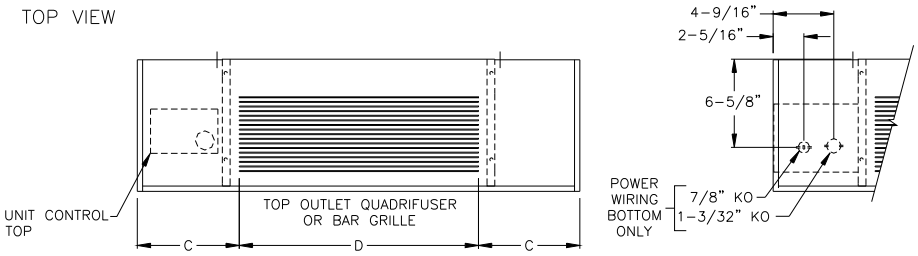

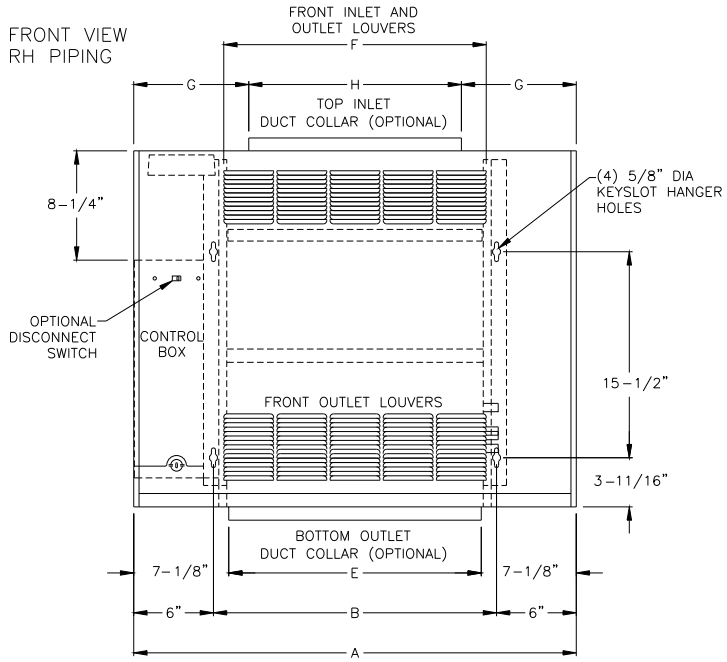

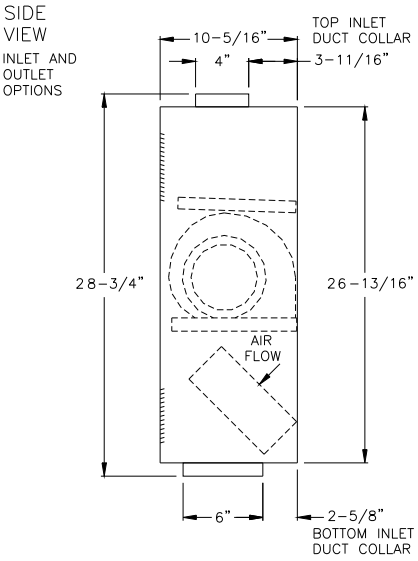

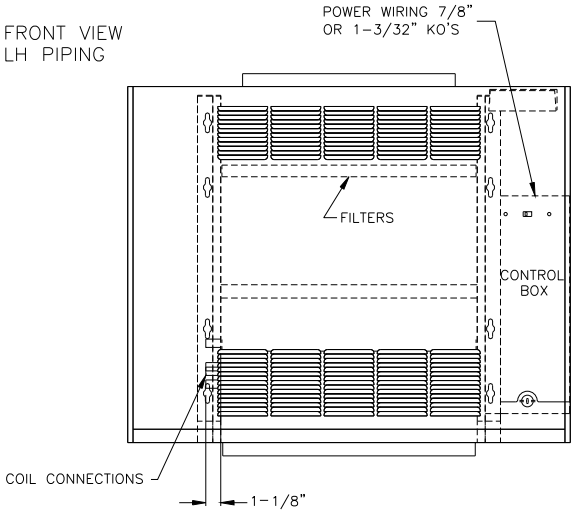

Inverted Vertical Cabinet Unit Dimensions (in.) and Weights (lb)

Unit Size	02–03	04	06	08	10–12
A	33-5/16"	38-5/16"	47-13/16"	56-5/16"	75-5/16"
B	21-5/16"	26-5/16"	35-13/16"	44-5/16"	63-5/16"
C	7-5/8"	7-1/8"	8-7/8"	7-1/8"	7-5/8"
D	18"	24"	30"	42"	60"
E	19-5/16"	24-5/16"	33-13/16"	42-5/16"	61-5/16"
F	19-3/4"	23-3/4"	31-3/4"	39-3/4"	59-3/4"
Operating Weight	97	125	155	164	218
Shipping Weight	84	112	139	148	200

Notes:
1. Coil connections are always opposite the control box side.
2. Coil connections are 5/8" O.D. sweat. See p. 31 for locations.
3. All duct collar dimensions are to the outside of the collar.
4. See p. 33 for dimensions for outside air openings.

Inverted Vertical Recessed, Model N (Force-Flo Units Only)

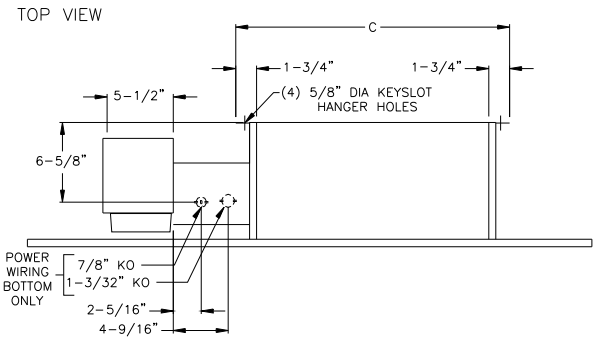

Inverted Vertical Recessed Unit Dimensions (in.) and Weights (lb)

Unit Size	02–03	04	06	08	10–12
A	27-7/8"	32-7/8"	42-3/8"	50-7/8"	69-7/8"
B	21-5/16"	26-5/16"	35-13/16"	44-5/16"	63-5/16"
C	22-13/16"	27-13/16"	37-5/16"	45-13/16"	64-13/16"
D	2-3/8"	2-3/8"	2-3/8"	4-1/8"	4-1/8"
E	47"	51"	63"	65-1/2"	89-1/2"
F	30"	30"	30"	33-1/2"	33-1/2"
G	26-1/2"	26-1/2"	26-1/2"	27-1/2"	27-1/2"
H	42"	48"	57"	63"	87"
Operating Weight	78	88	128	139	253
Shipping Weight	68	78	118	129	243

Notes:
1. Coil connections are always opposite the control box side.
2. Coil connections are 5/8" O.D. sweat. See p. 30 for locations.
3. All duct collar dimensions are to the outside of the collar.
4. See p. 33 for dimensions for outside air openings.

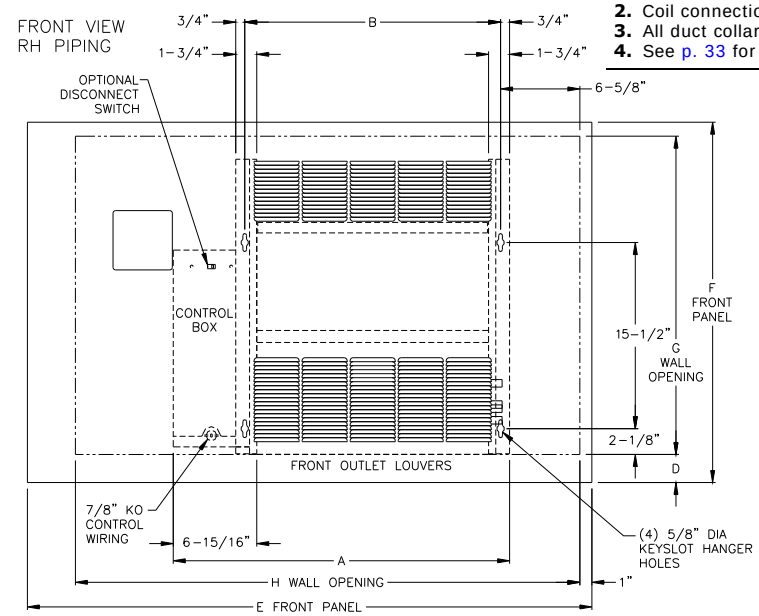

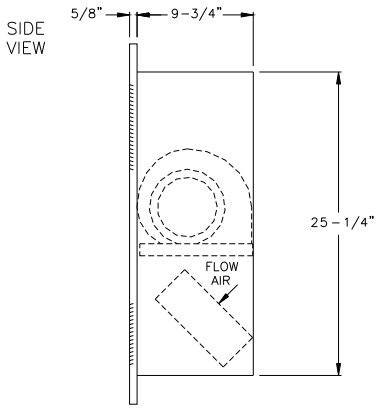

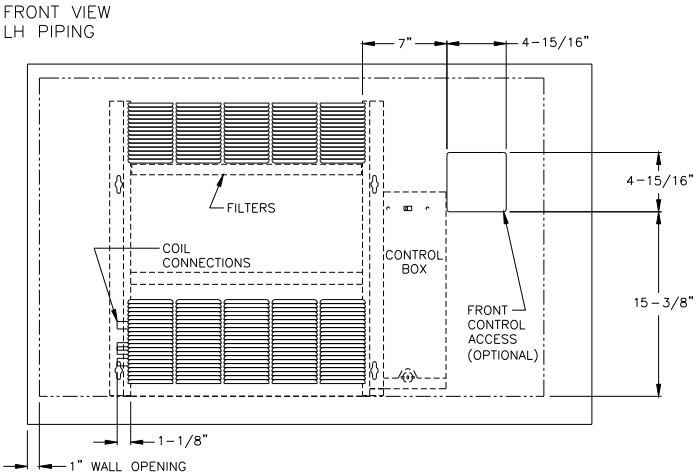

Compact Concealed, Model P

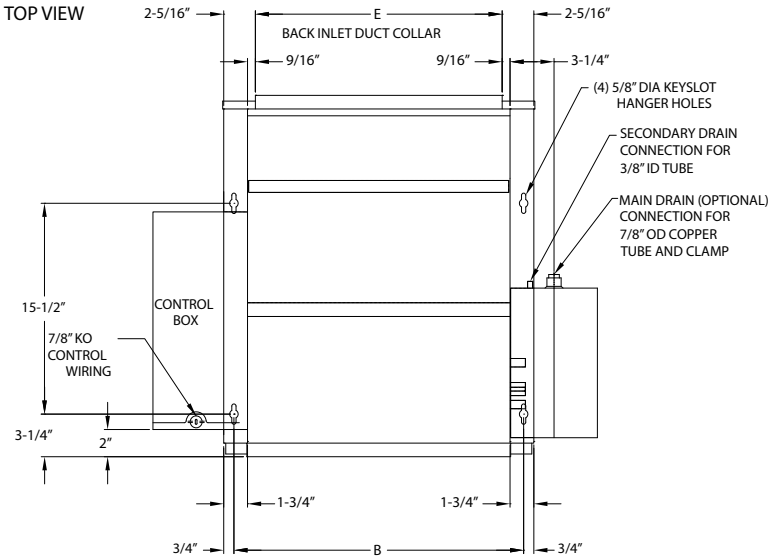

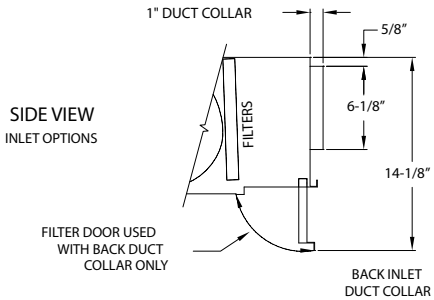

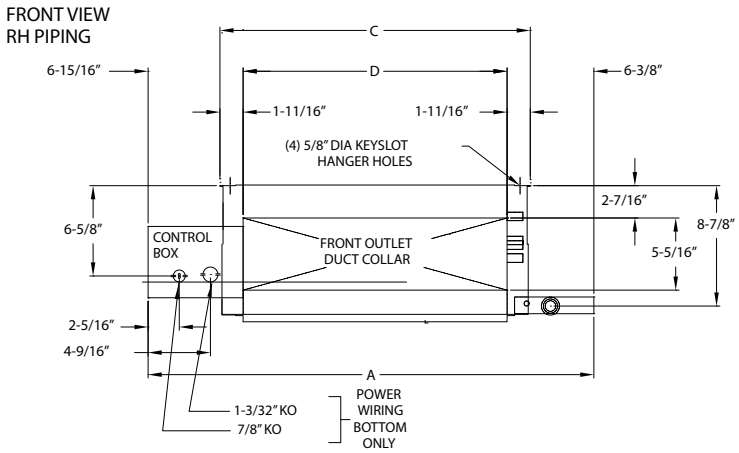

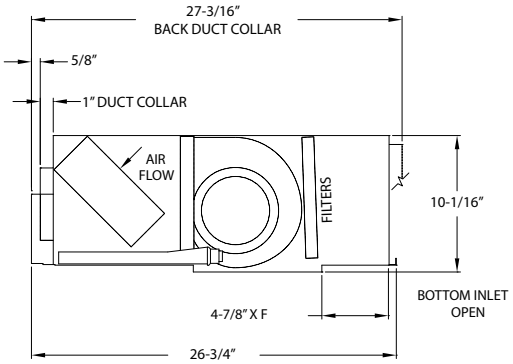

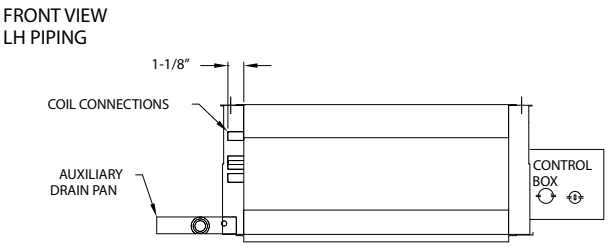

Compact Concealed Unit

Unit Size	200-300	400	600	800	1000-1200
A	32-11/16"	37-11/16"	47-3/16"	55-11/16"	74-11/16"
B	21-5/16"	26-5/16"	35-13/16"	44-5/16"	63-5/16"
C	22-13/16"	27-13/16"	37-5/16"	45-13/16"	64-13/16"
D	19-3/8"	24-3/8"	33-7/8"	42-3/8"	61-3/8"
E	18-1/8"	23-1/8"	32-5/8"	41-1/8"	60-1/8"
F	19-5/16"	24-5/16"	33-13/16"	42-5/16"	61-5/16"

Notes:
1. Coil connections are always on the drain pan side and opposite the control box and unit control.
2. Coil connections are 5/8" O.D. sweat. See p. 30 and p. 31 for locations.
3. All duct collar dimensions are to the outside of the collar.
4. See p. 32 for dimensions for outside air openings.

Fan-Coil Coil Connections

Vertical Units

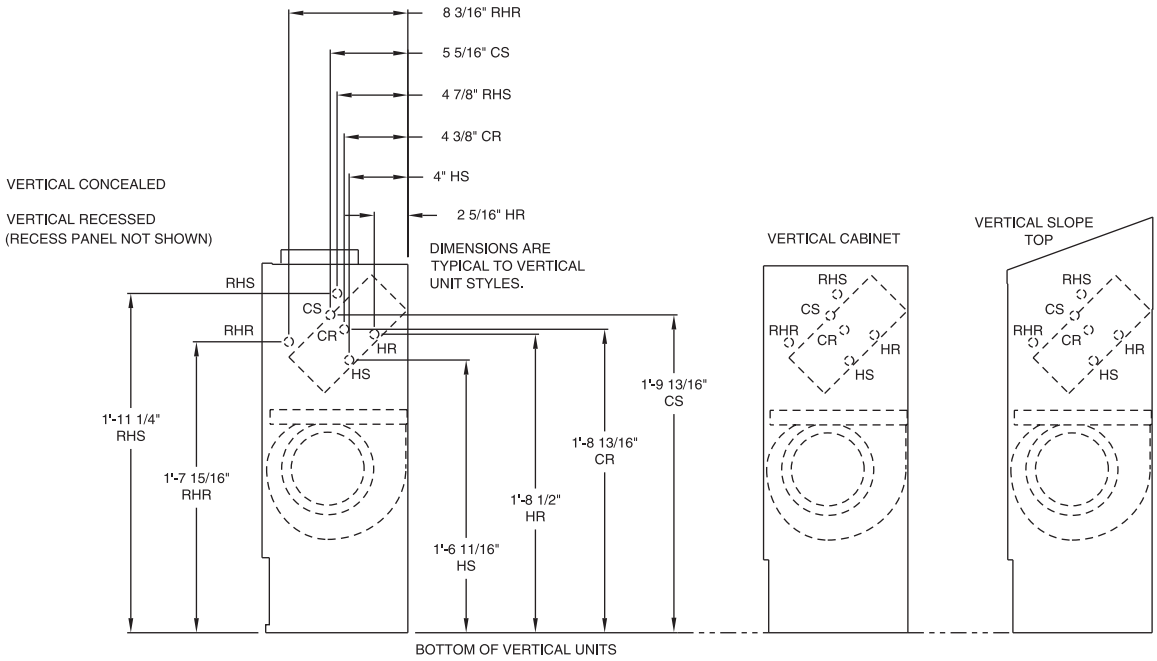

Horizontal Units

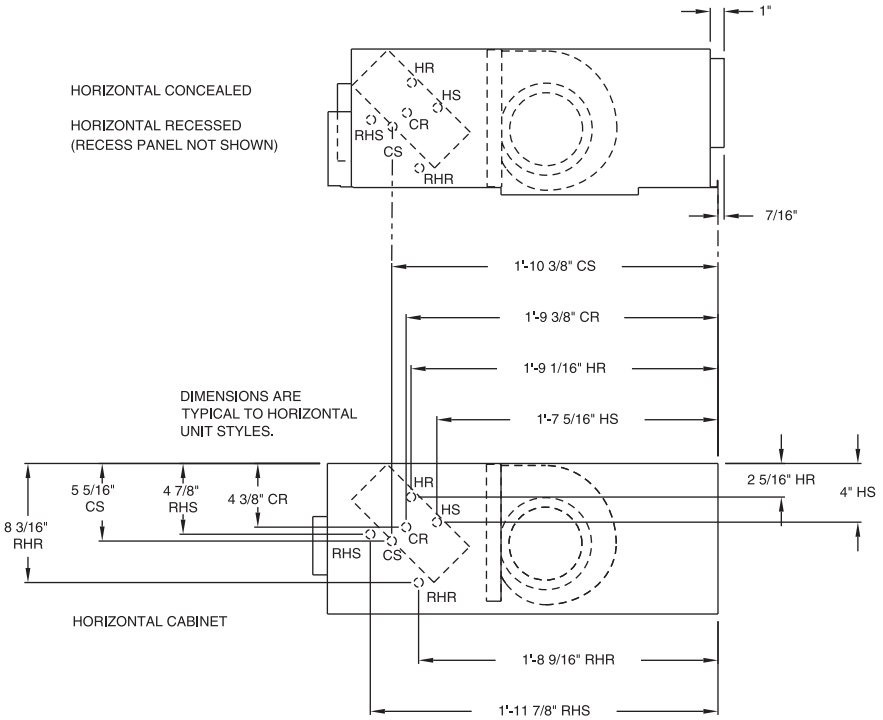

Force-Flo Coil Connections

Vertical Units

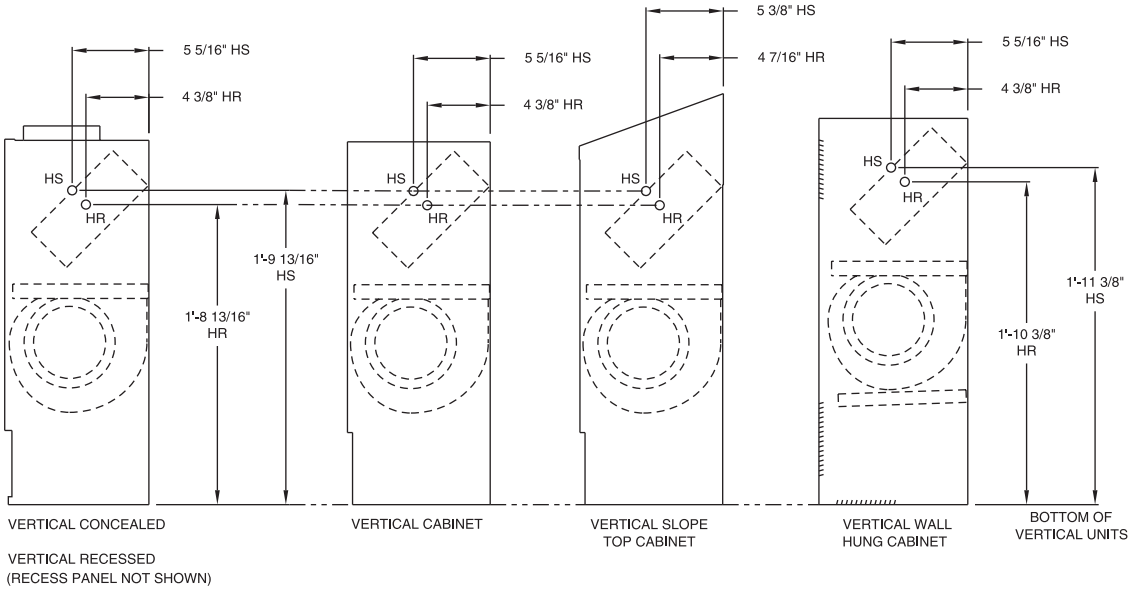

Horizontal Units

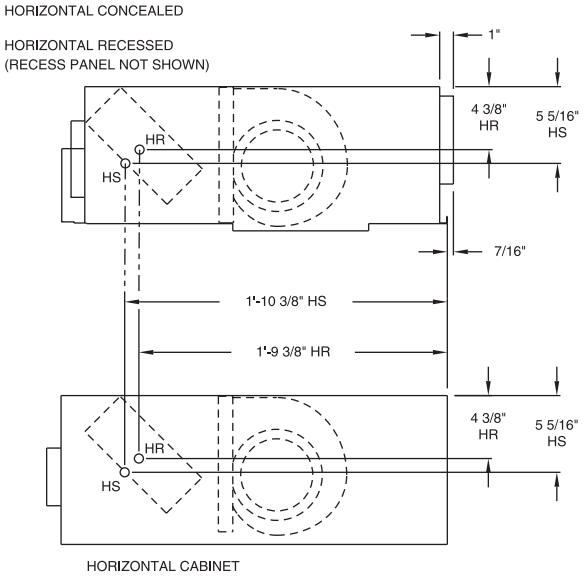

Force-Flo Coil Connections

Inverted Units

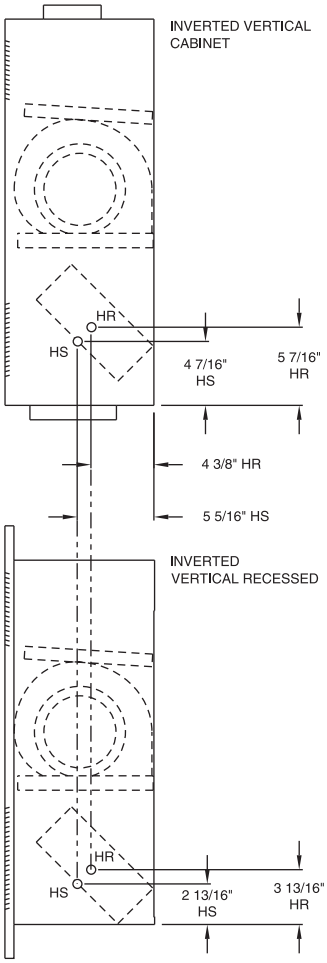

Fresh Air Opening Locations

Horizontal Units—Models C, D, E, and P (Back Duct Collar Only for Model P)

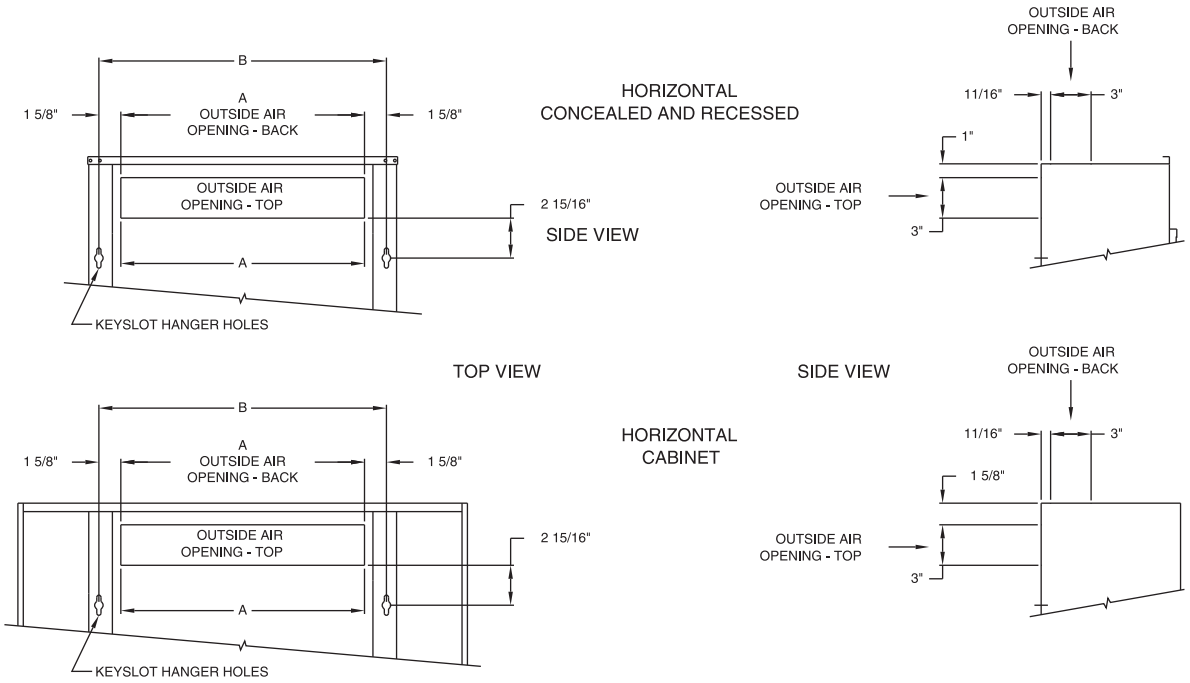

Fresh air opening dimensions, horizontal units

Unit Size	02–03	04	06	08	10–12
A	1’ 6”	1’ 11”	2’ 8-1/2”	3’ 5”	5’ 0”
B	1’ 9-5/16”	2’ 2-5/16”	2’ 11-13/16”	3’ 8-5/16”	5’ 3-5/16”

Fresh Air Opening Locations

Vertical Units—Models A, B, F, H, J, K, L, M, and N

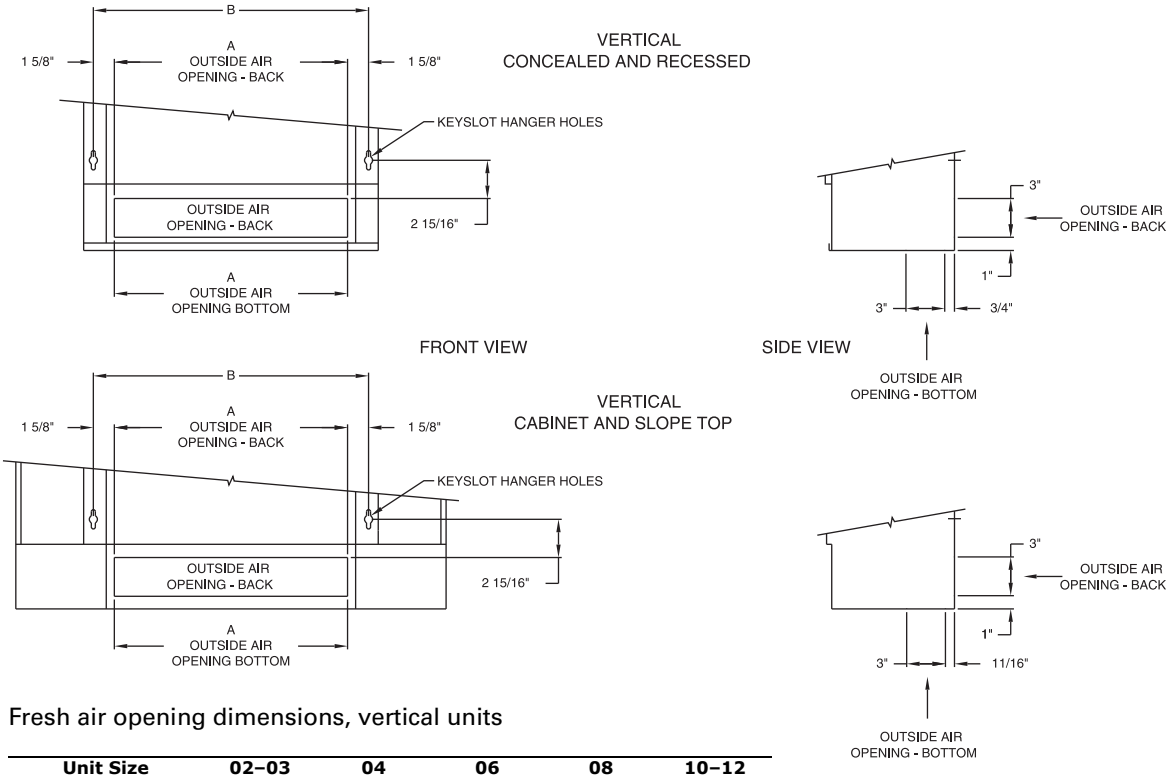

Fresh air opening dimensions, vertical units

Unit Size	02–03	04	06	08	10–12
A	1’ 6”	1’ 11”	2’ 8-1/2”	3’ 5”	5’ 0”
B	1’ 9-5/16”	2’ 2-5/16”	2’ 11-13/16”	3’ 8-5/16”	5’ 3-5/16”

Wall Box

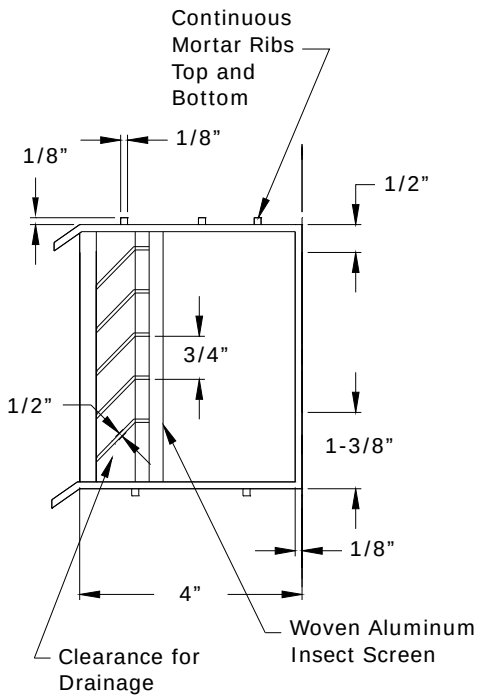

Wall box dimensions

Unit Size, Ref. only	Dimensions A x B	Internal Supports
02–03	24-3/8 x 4- 3/4	1
04	24-3/8 x 7-1/2	1
06	33-1/8 x 7-1/2	2
08	37-1/2 x 7-1/2	3
10–12	58-1/4 x 7-1/2	4

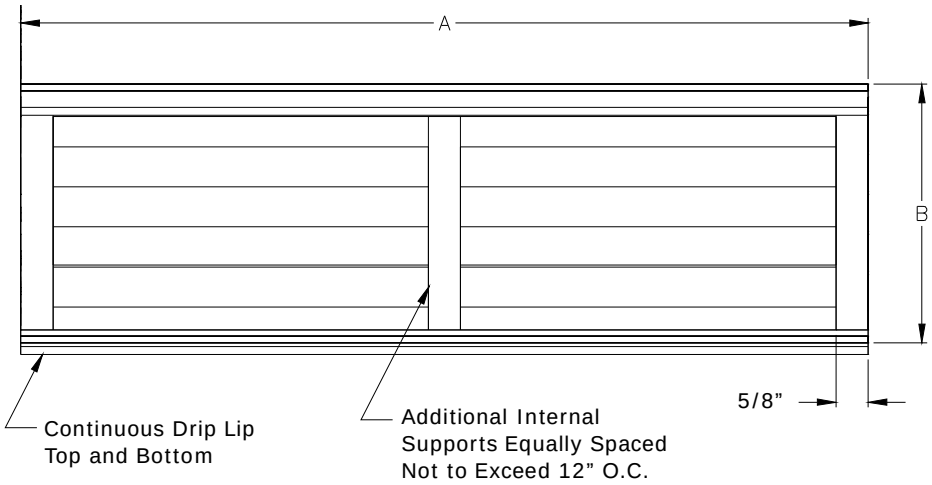

Projection Panel

Unit to Wall—Top View

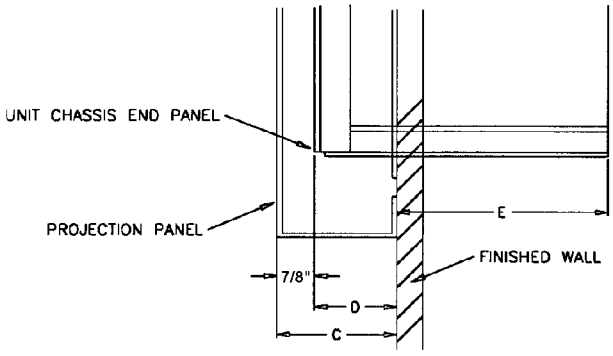

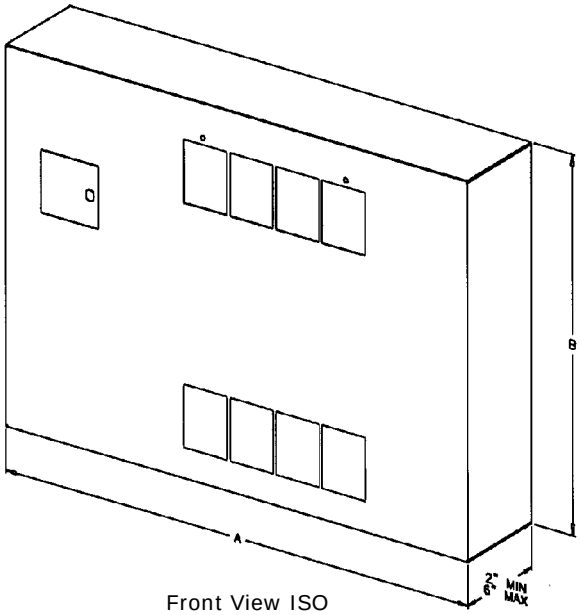

Front View ISO

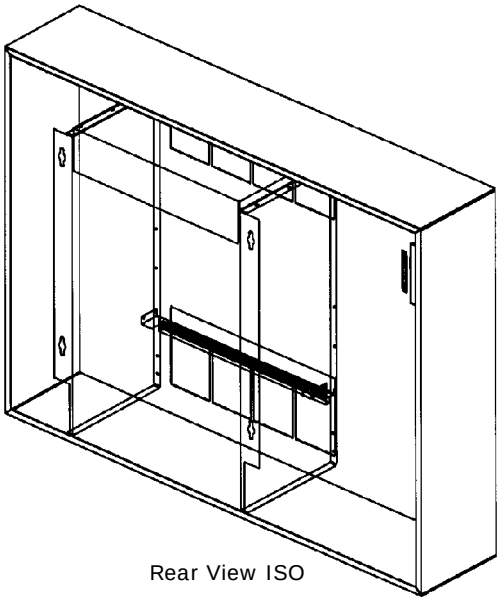

Rear View ISO

Projection panel dimensions

Unit Size	02–03	04	06	08	10–12
A	3’ 11”	4’ 3”	5’ 3”	5’ 5-1/2”	7’ 5-1/2”
B	2’ 6”	2’ 6”	2’ 6”	2’ 9-1/2”	2’ 9-1/2”

Projection panel, all unit sizes

C	2”	2-1/2”	3”	3-1/2”	4”	4-1/2”	5”	5-1/2”	6”	2”
D	1-1/8”	1-5/8”	2-1/8”	2-5/8”	3-1/8”	3-5/8”	4-1/8”	4-5/8”	5-1/8”	1-1/8”
E	8-5/8”	8-1/8”	7-5/8”	7-1/8”	6-5/8”	6-1/8”	5-5/8”	5-1/8”	4-5/8”	8-5/8”

Installation—Mechanical

Duct Connections

Install all air ducts according to National Fire Protection Association standards for the Installation of Air Conditioning and Ventilating Systems (NFPA 90A and 90B).

Install all air ducts according to the National Fire Protection Association standards for the "Installation of Air Conditioning and Ventilation Systems other than Residence Type (NFPA 90A) and Residence Type Warm Air Heating and Air Conditioning Systems (NFPA 90B).

⚠WARNING

Hazardous Voltage w/Capacitors!

Disconnect all electric power, including remote disconnects and discharge all motor start/run capacitors before servicing. Follow proper lockout/tagout procedures to ensure the power cannot be inadvertently energized. For variable frequency drives or other energy storing components provided by Trane or others, refer to the appropriate manufacturer's literature for allowable waiting periods for discharge of capacitors. Verify with an appropriate voltmeter that all capacitors have discharged. Failure to disconnect power and discharge capacitors before servicing could result in death or serious injury.

For additional information regarding the safe discharge of capacitors, see PROD-SVB06A-EN

The unit's airflow configuration varies dependent on the model and options ordered. A one-inch duct collar is provided on units with a ducted return and/or discharge to attach ductwork to the unit.

Trane recommends using galvanized sheet metal ductwork with fan-coil and cabinet heater units. Slide the sheetmetal duct over the duct collar flange of the unit, seal the joint and fasten with sheetmetal screws.

Note: *Do not run screws through the removable front panel on concealed units.*

Ductwork Recommendations

Follow the general recommendations listed below when installing ductwork for the unit.

1. Discharge ductwork should run in a straight line, unchanged in size or direction, for a minimum equivalent distance of three fan diameters from the unit (approximately 20 inches).
2. When making duct turns and transitions avoid sharp turns and use proportional splits, turning vanes, and air scoops when necessary.
3. When possible, construct, and orient supply ductwork turns in the same direction as the fan rotation.

Piping Considerations

Hydronic Coil Piping

Before installing field piping to the coil, consider the following:

- All coil connections are 5/8-inch O.D. (or 1/2-inch nominal) female copper connections.
- The supply and return piping should not interfere with the auxiliary drain pan or condensate line. See "Connecting the Condensate Drain" section for more detailed information.
- The installer must provide adequate piping system filtration and water treatment.
- Exterior condensate may be an issue (fan-coils only) if field piping does not have a control valve. Refer to the supply and return header locations in the "Dimensions and Weights" section.

Note: *When using a field supplied piping package in a fan-coil unit, allow sufficient room to install the auxiliary drain pan. In addition, piping package must not extend over edges of auxiliary drain pan.*

Connecting Field Piping to Coil

1. Remove the auxiliary drain pan, if it is in place, to prevent exposure to dripping solder or excessive temperatures.
2. Slide a 1/2-inch sweat connection coupling (installer provided) onto the coil headers.

   Note: *For vertical fan-coil units, push the main condensate drain hose and overflow condensate drain hose through the inside of the chassis end panel to prevent them from getting burned when making sweat connections. Be sure to pull the hoses back through and route to the auxiliary drain pan when the end panel has cooled.*
3. Solder the joint using bridgit lead-free solder (ASTM B32-89) to provide a watertight connection. Avoid overheating factory soldered joints when soldering field connections to the coil to prevent leakage from occurring.
4. Insulate all piping to coil connections as necessary after connections are complete.

   Note: *Maintain a minimum distance of one foot between the reduction fitting for the 1/2-inch diameter line and the fan-coil unit piping connections.*
5. Install the optional auxiliary drain pan, which ships in the accessory packet.

Water Piping Connections to Factory-Installed Piping Package

Before installing water piping supply and return lines to factory piping package, note the following items.

- All piping connections are 5/8-inch O.D. (1/2-inch nominal) female copper connections.
- The fan-coil supply and return piping should not interfere with the auxiliary drain pan or condensate line. See "Condensate Drain," p. 37 for more information.
- The installer must provide adequate piping system filtration and water treatment.
- If the unit has a factory deluxe piping package, the piping includes a strainer with a 20-mesh size screen, which allows minimal protection from debris. Therefore, clean the strainer regularly.

Note: *Maintain a minimum distance of one foot between the reduction fitting for the 1/2-inch diameter line and the fan-coil piping connections.*

1. The factory piping package ships with brackets to adequately support the piping during shipment. Remove these brackets before connecting water piping to the unit.
2. Close the piping end valves to the fully open position to prevent damage to the valve seat during brazing.
3. Remove the auxiliary drain pan, if it is in place, to prevent exposure to dripping solder or excessive temperatures.
4. Solder water piping connections to supply and return end connections. Avoid overheating factory soldered joints to prevent the possibility of leakage.
5. Insulate fan-coil piping to auxiliary drain pan connections and any piping that is not above the auxiliary drain pan.

Condensate Drain

1. De-burr the pipe end before making the connection to the drain pan.
2. Connect a 7/8-inch O.D. copper pipe or tube, with a 0.20 inch wall thickness, to the auxiliary drain pan. This should be a mechanical connection that allows easy removal of the auxiliary drain pan when servicing the piping end pocket.
3. Slide the copper pipe over the drain pan nipple and tighten the collar on the pipe with a hose clamp (installer supplied).

Maintain a continuous drain line pitch of one inch per ten feet of drain line run to provide adequate condensate drainage. Extend the drain line straight from the drain pan a minimum distance of six inches before making any turns. The installer must provide proper support for the drain line to prevent undue stress on the auxiliary drain pan.

Install a secondary overflow drain line if necessary by punching out the overflow drain nipple on the auxiliary drain pan. Next, place a 3/8-inch inside diameter flexible plastic tube over the nipple and secure with a field supplied hose clamp.

Note: *The installer is responsible for adequately insulating field piping. See the "External Insulating Requirements section for more information.*

Condensate Overflow Detection Device

The condensate overflow detection device is an option on fan-coil units with either a Tracer ZN010, ZN510, ZN520, UC400, or the customer-supplied control interface. The float switch, mounting bracket, and coiled leads ship attached inside the piping end pocket of the unit. Install the switch by placing the hole or slot in the bracket over the condensate overflow drain (of the auxiliary drain pan) with the switch float extending over the pan. Secure the drain pan by attaching the pan's bracket with the factory provided clip. See Figure 3 and Figure 4.

Figure 3. Condensate float switch installed in horizontal auxiliary drain pan

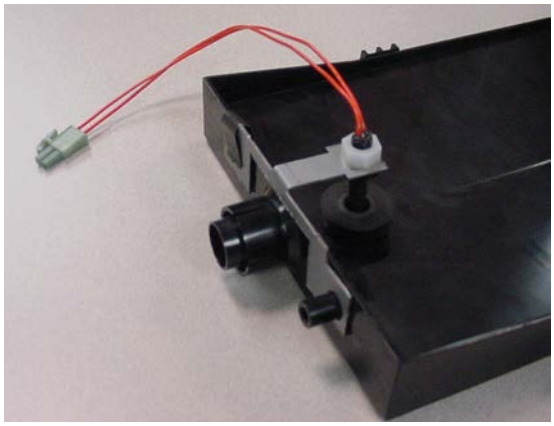

Figure 4. Condensate float switch installed in vertical auxiliary drain pan

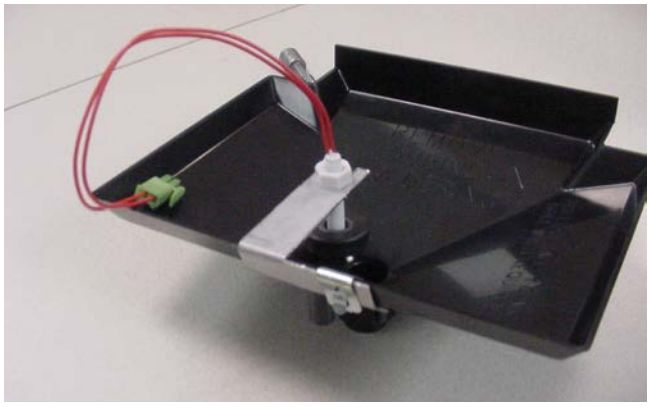

Automatic Changeover Sensor

Two-pipe changeover units with either the Tracer ZN010, ZN510, ZN520, and UC400 and CSTI controls have an automatic changeover sensor that determines heating or cooling mode based on the supply water temperature. On units with a factory piping package, the factory straps the changeover sensor to the piping supply water pipe. See Figure 5, p. 38 and Figure 6, p. 38.

Figure 5. Attach the changeover sensor to the entering water pipe as shown for changeover to work properly

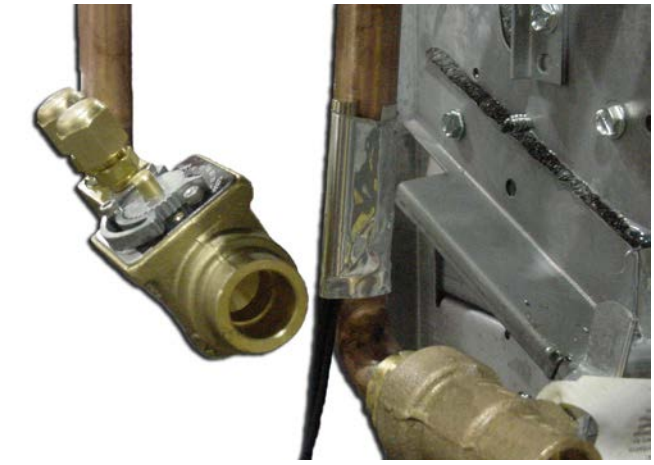

Figure 6. Close-up view of the changeover sensor

If the unit does not have a factory piping package, the factory attaches the sensor and coiled lead wires to the piping side end panel. The installer should attach the sensor parallel to and in direct contact with the supply water pipe.

Note: *The installer is responsible to ensure the changeover sensor is installed in a location that can sense active water temperature. Otherwise, the unit may fail to sense the correct operating mode and disable temperature control.*

When using field supplied three-way valves, install the changeover sensor upstream of the valve on the supply water pipe. When using field supplied two-way control valves, install the changeover sensor in a location that will detect active water temperature. **The unit must always be able to sense the correct system water temperature, regardless of the control valve position.**

Note: *The maximum length of the automatic changeover wire cannot exceed ten feet from the control panel. If the sensor extends beyond the unit chassis, use shielded conductors to eliminate radio frequency interference (RFI).*

Venting the Hydronic Coil

The hydronic coil contains a vent, either manual or automatic, to release air from the unit. This vent is not sufficient for venting the water piping system in the building.

The coil air vent is on the piping side, above the coil connections on the unit. See Figure 7 and Figure 8. Perform the following steps to vent the coil after installing the unit.

Figure 7. Manual coil air vent with set screw

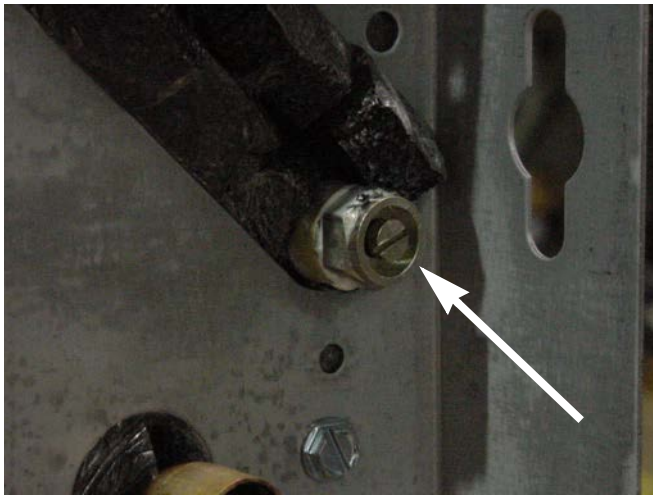

Figure 8. Manual coil air vent with Shrader fitting

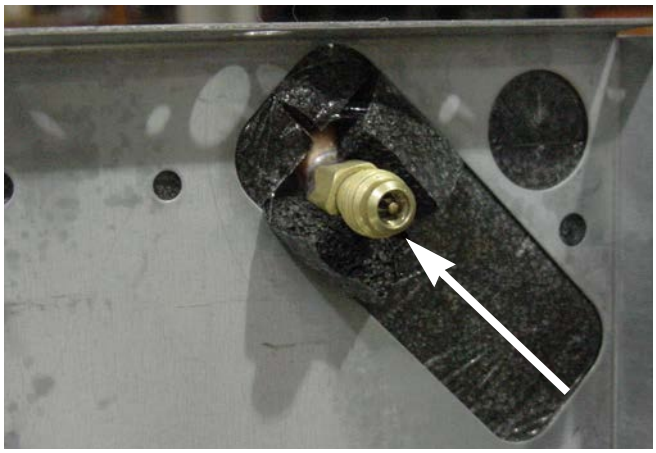

1. Pressurize the building piping system with water and vent any trapped air at system vents.

2. For units with manual air vents, back the set screw out to expel air from the unit and then re-tighten the set screw.

The automatic air vent should require no adjustment for the coil to vent. However, if the coil does not vent immediately, unscrew the outer portion of the fitting to expel air from the port.

If debris has become trapped in the vent, completely remove the outer portion of the fitting and clean.

External Insulating Requirements

Insulate and vapor seal surfaces colder than surrounding air dew-point a to prevent unplanned condensation. Trane recommends field-insulation of the following areas to prevent potential condensate problems:

1. Supply and return water piping connections
2. Condensate drain lines and connections
3. Fresh air intake duct connections
4. Discharge duct connections
5. Wall boxes

Balancing The Manual Circuit Setter Valve

The manual circuit setter valve is an optional end valve supplied on the return pipe of the factory piping package. The valve allows the operator to regulate water flow through the hydronic coil, balance the water flow through the unit with other units in the piping system, and serves as a shutoff or end valve. See Figure 9.

Figure 9. Manual circuit setter valve

Figure 10. Automatic circuit setter valve

Figure 11. Automatic circuit setter valve

Perform the following procedure to set maximum water flow through the coil:

1. Establish water flow through the coil. Perform an open override of the valve if the control valve is closed to the coil, either manually or by Tracer.

   If the piping package has two-position, normally closed valves: Drive open the valve using a 24 V signal.

   If the piping package has two-position, normally open valves: Manually drive open the valve by removing power to the valve.

   If the piping package has modulating valves: To manually drive the valve open, depress the button stem on top of the valve and push the lever located on the side of the valve to the full open position.
2. For presetting, use the appropriate valve curve shown in Figure 12, p. 40 to determine which setting is necessary to achieve the appropriate pressure drop. The “M” line is the appropriate line.
3. Carefully remove the Schrader pressure port connection caps on the manual circuit setter, since they will be at the same temperature as the pipeline.
4. Bleed all air from the hoses and meter before reading the pressure drop. Refer to the gauge operating instructions.

5. Adjust the circuit setter valve by turning the valve stem until the appropriate pressure drop is achieved.
6. After achieving the proper setting, slightly loosen the two socket head cap screws and rotate the memory stop around until it touches the back side of the indicator. Then tighten the screws to securely set the open memory position. The memory stop indicates the last set open position.
7. If using a three-way valve: close the control valve to the coil, with the differential pressure meter still connected. This will divert flow to the bypass side of a three-way valve.

Adjust the balancing fitting to obtain the same pressure drop across the circuit setter valve as in step two when the control valve was open to the coil.

Figure 12. Manual circuit setter valve, differential pressure vs. flow

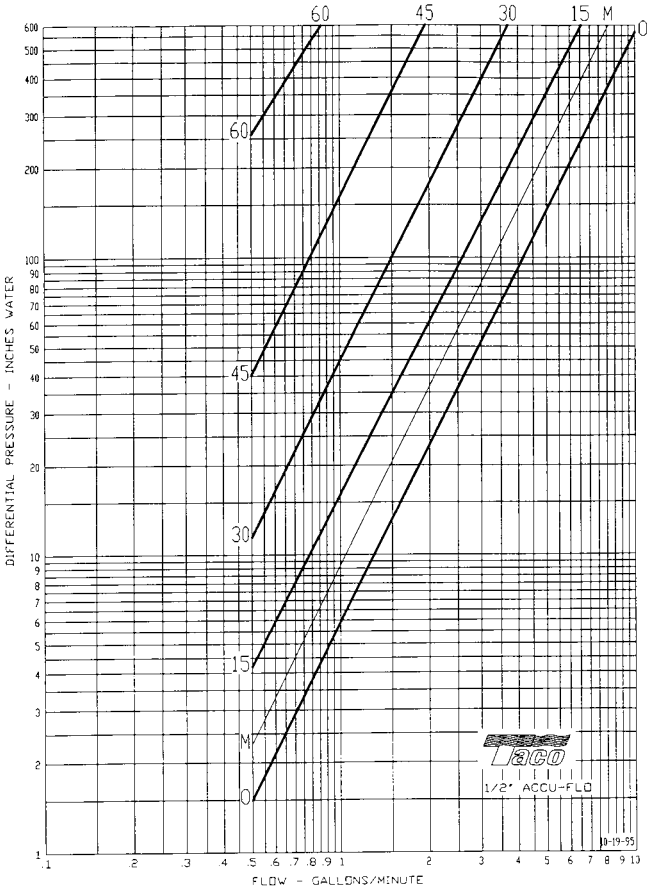

Note: *Instructions for using this chart appear on the preceding page. For the manual circuit setter provided with fan-coil or Force-Flo units, use the 'M'.*

NOTICE:

Coil Damage!

In all steam coil installations, the condensate return connections must be at the low point of the coil to ensure condensate flows freely from the coil at all times. Failure to do so could cause physical coil damage from water hammer, unequal thermal stresses, freeze-up and/or corrosion.

1. Make piping connections to the steam coil as shown in Figure 14. Cap the unused connection.
2. The coil is already pitched within the unit to provide proper pitch to drain condensate out of the coil. Verify that the unit has been properly leveled.
3. Install a 1/2-inch, 15-degree swing check vacuum breaker in the unused condensate return tapping as close as possible to the coil.
4. Vent the vacuum breaker line to atmosphere or connect it into the return main at the discharge side of the steam trap.
5. Pitch all steam supply and return mains down a minimum of one inch per ten feet in the direction of flow.
6. Do not drain the steam mains or take-off through the coils. Drain the mains ahead of the coils through a steam trap to the return line.
7. Overhead returns require one psig of pressure at the steam trap discharge for each two-feet elevation to ensure continuous condensate removal.
8. Proper steam trap selection and installation is necessary for satisfactory coil performance and service life. For installation, use the following steps:
   a. Position the steam trap discharge at least 12 inches below the condensate return connection. This provides sufficient hydrostatic head pressure to overcome trap losses and ensure complete condensate removal.
   b. Trane recommends using flat and thermostatic traps because of gravity drain and continuous discharge operation.
   c. Use float and thermostatic traps with atmospheric pressure gravity condensate return, with automatic controls or where the possibility of low pressure supply steam exists.
   d. Always install strainers as close as possible to the trap inlet side. Reference Figure 13 for an example of a properly piped steam coil.

Figure 13. Typical piping for steam coils

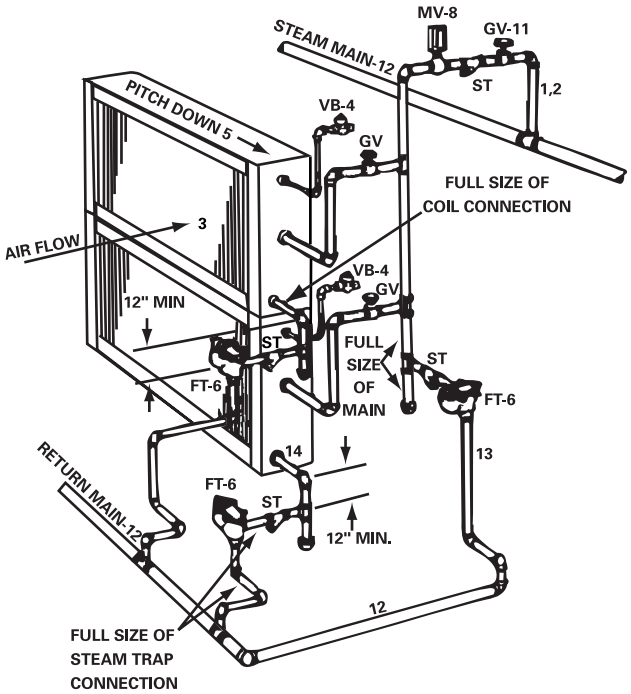

Code of System Components in Piping Diagram

FT	Float and thermostatic steam trap
BT	Bucket steam trap
GV	Gate valve
OV	Automatic two-position (on-off) control valve
TV	Automatic three-way control valve
VB	Vacuum breaker
CV	Check valve
ST	Strainer
AV	Automatic or manual air vent

Figure 14. Main steam coil connection diagram

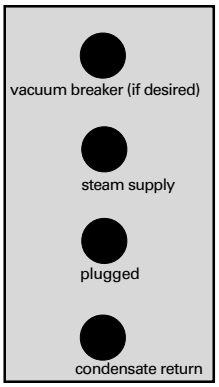

Installation—General

Installing the Unit

Follow the procedures below to install the unit properly. Refer to "Dimensions and Weights," p. 12 for specific unit dimensions and mounting hole locations.

Vertical Units

NOTICE:

Electrical Wiring!

Do not allow electrical wire to fall between the unit and installation surface. Failure to comply may result in electrical shorts or difficulty accessing wires.

Install vertical units in an upright position using the 5/8-inch diameter double key slot hanger holes, located on the back of unit. The hanger holes allow a maximum shank size of 5/16-inch diameter threaded rods or lag screws (installer provides).

1. Prepare wall openings for recessed units. Reference unit submittal for each unit size dimensions. When installing vertical units, consideration should be given for units with an outside air intake.
2. If the unit has leveling legs, adjust them correctly to level unit.
3. Mark the position of the keyslot hanger holes on the wall according to the dimensions given in "Dimensions and Weights," p. 12 for each unit model and size. Align the hole locations evenly.
4. Insert the threaded rods or lag screws in the wall before setting the unit in place.
5. Remove the front panel (cabinet unit only) by lifting it upward.
6. Position the hanger holes, located on the back of the unit, over the rod or lag screw heads, pushing the unit downward to properly position.
7. Complete piping and wiring connections, in addition to any necessary ductwork to the unit as instructed in the following sections. Ensure that the auxiliary drain pan is in position on fan-coil units.
8. Install the front panel before starting the unit.

On cabinet units, replace the front panel by aligning the bottom tabs on the unit with the respective slots on the panel bottom. Slide the front panel down onto the tabs while holding the panel close as possible to the cabinet. While the bottom tabs are engaged, slide the front panel upward enough to allow the top engaging edge of the front panel to lap over the engaging edge of the unit. This should allow the panel to drop down and lock into position.

On recessed units, install the front panel by aligning and locking together the interlocking support channel of the panel and unit. While holding the panel against the unit, tighten the screws at the top of the panel until it fits tight against the unit's front. Do not over tighten the screws.

NOTICE:

Motor Overload!

All unit panels and filters must be in place prior to unit startup. Failure to have panels and filters in place may cause motor overload.

Horizontal Units

Install horizontal units suspended from the ceiling using the four 5/8-inch diameter double key slot hanger holes, located on the top of the unit. The hanger holes allow a maximum shank size of
5/16-inch diameter threaded rods or lag screws (installer provided). Follow the installation procedure below.

Note: *Follow the requirements of National Fire Protection Association (NFPA) Standard 90A or 90B, concerning the use of concealed ceiling spaces as return air plenums.*

1. Prepare the ceiling opening for recessed units. Reference the unit submittals for dimensions.
2. Position and install the suspension rods or a suspension device (supplied by installer) according to the unit model and size in "Dimensions and Weights," p. 12.
3. On cabinet units, remove the bottom panel by using a 5/32-inch Allen wrench to unscrew fasteners. Swing the panel down and lift outward.
4. Level the unit by referencing the chassis end panels. Adjust the suspension device.
5. Complete piping and wiring connections, in addition to any necessary ductwork as instructed in the following sections. Ensure that the auxiliary drain pan is in position on fan-coil units.
6. Install the bottom panel before starting the unit.
7. Ensure condensate drain line is pitched one inch per ten feet of pipe away from the fan-coil unit.

Cabinet Units

Install the bottom panel by placing the hinged end on the unit's hinged end (always at the return end of the unit). Refer to "Dimensions and Weights," p. 12 for keyslot hanger hole locations. Swing the panel upward into position. Secure the panel with the fasteners provided. Do not overtighten the fasteners.

Recessed Units

Refer to "Dimensions and Weights," p. 12 for mounting locations and unit weights. Follow the procedure below and see Figure 15, p. 43.

1. Insert the mounting bolts through the panel brackets of the trim ring and secure to the hanger holes on the unit. Tighten the mounting bolts to pull the trim ring snug against the finished ceiling.
2. Install the bottom panel by placing the hinged end on the trim ring hinged end (always at the unit's return end).
3. Adjust the expansion collar's inner duct (only on fan-coil units with a bottom return) to ensure a tight fit against the insulation located on the perimeter of the bottom panel's return louver.
4. Close the s-hook on each end of safety chain assembly. Insert s-hooks through holes in unit and door. Close s-hook on door.
5. Insert retaining screws through bottom panel door and place retaining rings on screws.
6. Swing the bottom panel upward into position. Hook the safety chain to the bottom panel and the unit. Tighten the panel to the unit with the fasteners provided.

NOTICE:

Unit Leveling!

All unit panels and filters must be in place prior to unit start-up. Failure to have panels and filters in place may cause motor overload.

Figure 15. Installing the trim ring assembly on horizontal recessed units

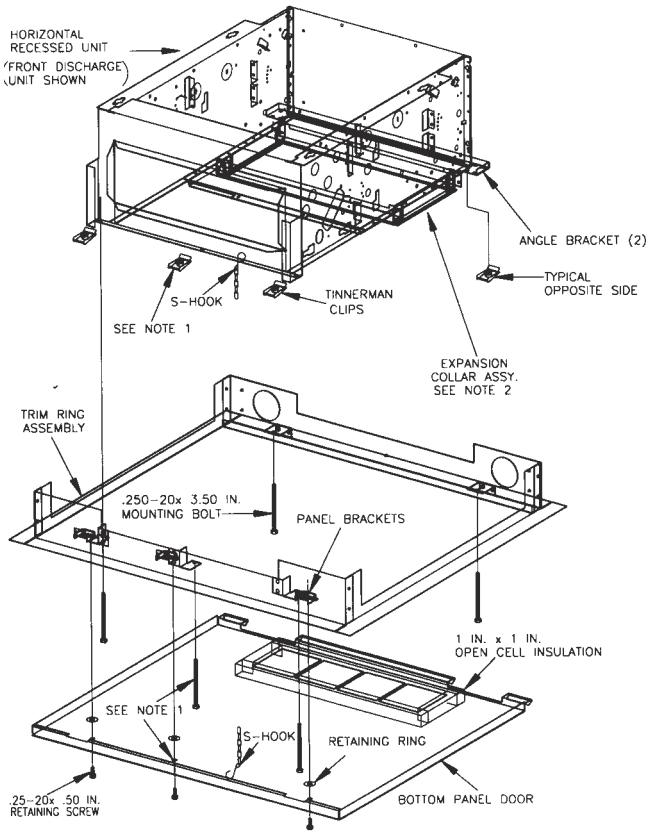

PARTS LIST		
PART DESCRIPTION	QTY.	
BOTTOM PANEL DOOR	1	
TRIM RING ASSEMBLY	1	
INSTALLATION DRAWING	1	
UNIT SIZE	02-06	08-12
.25-20 x .50 IN. RETAINING SCREW	2	3
RETAINING RING	2	3
SAFETY CHAIN ASSEMBLY	1	2
.25-20 x 3.50 IN. BOLT	4	5
.25-20 x 2.00 IN. BOLT	0	1
TINNERMAN CLIP	4	5

Notes:

- *The trim ring assembly cannot accommodate unlevel ceilings.*
- *On sizes 8, 10, and 12 center installation position and use 2- or 3.5-inch bolts, whichever is best suited for installation. Also, install two safety chains assemblies on these sizes.*
- *Expansion collar is furnished with fan-coil with bottom return only. The collar is not necessary for Force-Flo units.*

Installation Checklist

The following checklist is only an abbreviated guide to the detailed installation procedures given in this manual. Use this list to ensure all necessary procedures are complete. For more detailed information, refer to the appropriate sections in this manual.

⚠WARNING

Hazardous Voltage w/Capacitors!

Disconnect all electric power, including remote disconnects and discharge all motor start/run capacitors before servicing. Follow proper lockout/tagout procedures to ensure the power cannot be inadvertently energized. For variable frequency drives or other energy storing components provided by Trane or others, refer to the appropriate manufacturer's literature for allowable waiting periods for discharge of capacitors. Verify with an appropriate voltmeter that all capacitors have discharged. Failure to disconnect power and discharge capacitors before servicing could result in death or serious injury.

For additional information regarding the safe discharge of capacitors, see PROD-SVB06A-EN

- ☐ 1. Inspect the unit for shipping damage.
- ☐ 2. Level installation location to support the unit weight adequately. Make all necessary wall or ceiling openings to allow adequate air flow and service clearances.
- ☐ 3. Ensure the unit chassis is installed level.

NOTICE:

Unit Leveling!

The unit must be installed level (zero tolerance) in both horizontal axis for proper operation. Do not use the coil or drain pan as the reference point because the coil may be pitched and the drain pan has an inherent positive slope to provide proper drainage.

- ☐ 4. Verify that wall and ceiling openings are properly cut per the unit submittals.
- ☐ 5. Verify that installation of horizontal concealed units meets the national Fire Protection Association (N.F.P.A.) Standard 90A or 90B concerning the use of concealed ceiling spaces as return air plenums. Verify correct ceiling opening dimensions on unit submittals.

  Secure the unit and any accessory items properly to the wall or ceiling support rods.
- ☐ 6. Complete all piping connections correctly.
- ☐ 7. Check field sweat connections for leaks and tighten the valve stem packing, and piping package unions if necessary.
- ☐ 8. Install the auxiliary drain pan, if ordered, properly under piping package on fan-coil units.
- ☐ 9. Complete condensate drain line connections on fan-coil units.
- ☐ 10. Pitch condensate drain line away from fan-coil one-inch drop per ten feet of pipe.
- ☐ 11. Install automatic changeover sensor option on the supply water line, if applicable.
- ☐ 12. Install condensate overflow switch option correctly on the auxiliary drain pan, if applicable.
- ☐ 13. Ensure the low temperature detection device option is correctly installed.
- ☐ 14. Complete all necessary duct connections.
- ☐ 15. Complete all interconnection wiring for the wall-mounted fan mode switch or zone sensor per the wiring schematic and guidelines established in "Wall-Mounted Control Interconnection Wiring," p. 49.
- ☐ 16. Install the wall-mounted fan mode switch, or zone sensor module options properly.

  For wireless zone sensors, be sure to set the address (see "Address Setting," p. 77).
- ☐ 17. Make field mounted controller / fan speed switch connections to CSTI / FSS as indicated on unit schematic.
- ☐ 18. Connect electrical supply power according to the NEC and unit wiring diagrams.
- ☐ 19. Remove any miscellaneous debris, such as sheetrock dust, that may have infiltrated the unit during construction.
- ☐ 20. Replace the air filter as required.

Installation—Controls

Control sensor options include both unit-mounted (factory-installed) and wall-mounted sensors. Installation instructions for the wall-mounted sensors are provided in this chapter.

General Information

Control Options (Including Factory-Installed)

Tracer ZN010 Options

Unit-mounted zone sensor:
Digit 30 = E and Digit 31 = V

X13790843-01

Wall-mounted zone sensor:
Digit 30 = E and Digit 31 = W

X13790841-01

Split-mounted zone sensor, unit-mounted fan mode and wall-mounted setpoint dial:
Digit 30 = E and Digit 31 = X

X13511529-01 (wall)
X13790849-01 (unit)

Tracer ZN510, ZN520, and UC400 Options

Wall-mounted zone sensor:
Digit 30 = F, G, or J and Digit 31 = 1

X13511530-01 (wall)
X13651467-02 (comm)

Wall-mounted zone sensor:
Digit 30 = F, G, or J and Digit 31 = 2

X13790842-01 (wall)
X13651467-02 (comm)

Split-mounted zone sensor, unit-mounted fan mode and wall-mounted setpoint dial:
Digit 30 = F, G, or J and Digit 31 = Y

X13511527-01 (wall)
X13790849-01 (unit)
X13651467-02 (comm)

Unit-mounted zone sensor:
Digit 30 = F, G, or J and Digit 31 = Z

X13790844-01

Wall-mounted wired display sensor with setpoint adjustment:
Digit 30 = F, G, or J and Digit 31 = 4

X13790886-04 (wall)

Wall-mounted wireless temperature sensor (WZS) (setpoint adjustment, no fan speed adjustment) and unit-mounted receiver:
Digit 30 = F, G, or J and Digit 31 = 6

X13790821-01 (wall)
X13790860-02 (unit)

Wall-mounted wireless display sensor (WDS) and unit-mounted receiver:
Digit 30 = F, G, or J and Digit 31 = 7

X13790822-04 (wall)
X13790860-02 (unit)

Installing Wall-Mounted Wired Sensors

Reference the wall-mounted zone sensor dimensions in Figure 16, p. 46. Position the sensor on an inside wall three to five feet above the floor and at least 18 inches from the nearest outside wall. Installing the sensor at a lower height may give the advantage of monitoring the temperature closer to the zone, but it also exposes the sensor to airflow obstructions. Ensure that air flows freely over the sensor.

Figure 16. Wall-mounted wired and wireless zone sensor dimensions

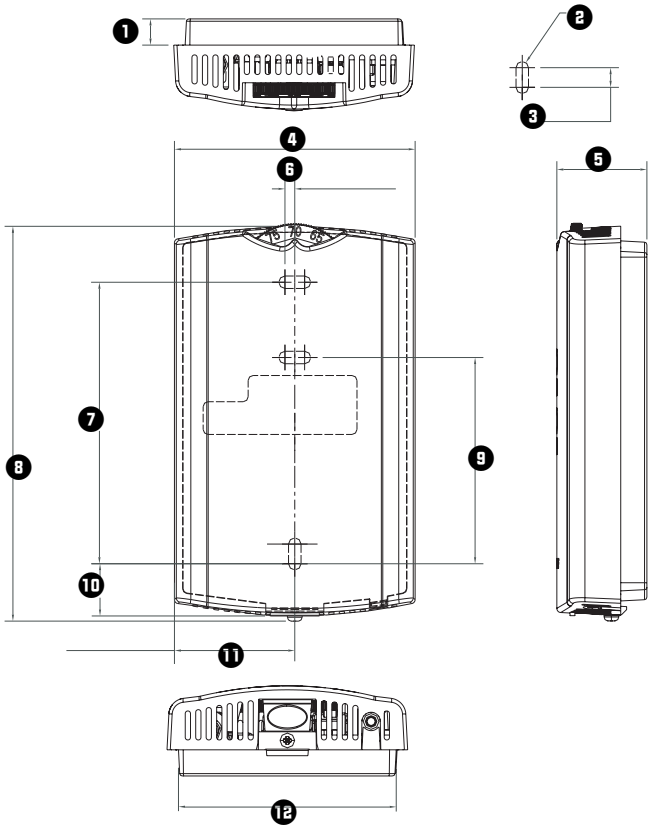

1.	0.31 in	7.	3.39 in
2.	TYP R.07 in (R1.9)	8.	4.68 in
3.	TYP 0.24 in)	9.	2.48 in
4.	2.9 in	10.	0.63 in
5.	1.08 in	11.	1.45 in
6.	0.12 in	12.	2.62 in

Sensor

When selecting a sensor location, avoid the following:

- Areas of direct sunlight
- Areas in the direct airstream of air diffusers
- Exterior walls and other walls that have a temperature differential between the two sides
- Areas that are close to heat sources such as sunlight, appliances, concealed pipes, chimneys, or other heat-generating equipment
- Drafty areas
- Dead spots behind doors, projection screens, or corners
- Walls that are subject to high vibration
- Areas with high humidity
- High traffic areas (to reduce accidental damage or tampering)

- Metal barriers between the receiver and the sensor (for example, plastered walls with metal lathe or metal roof decks)
- Thick, solid concrete walls between the receiver and the sensor
- Placing the sensor inside metal enclosures

Height Requirements

It is recommended that you mount the back plate a maximum distance of 54 inches above the floor. If a parallel approach by a person in a wheelchair is required, reduce the maximum height to 48 inches.

Note: *Consult section 4.27.3 of the 2002 ADA (Americans with Disability Act) guideline, and local building codes, for further details regarding wheelchair requirements.*

Mounting Surfaces

Using the hardware provided, mount the back plate of the sensor to a flat surface such as sheetrock or plaster, or an electrical junction box. The sensor must be mounted plumb for accurate temperature control and to ensure proper air movement through the sensor.

- If mounting onto sheetrock or plaster, use the plastic threaded anchors (pre-drilling holes is not usually necessary) and the two M3.5 x 20 mm mounting screws.
- For mounting onto an electrical junction box, use the two 6-32 x 3/4 in. screws.

Before beginning installation, consider the location considerations below. Also, refer to the unit wiring schematic for specific wiring details and point connections.

Location Considerations

Avoid mounting the sensor in an area subject to the following conditions:

- Dead spots, such as behind doors or in corners that do not allow free air circulation.
- Air drafts from stairwells, outside doors, or unsectioned hollow walls.
- Radiant heat from the sun, fireplaces, appliances, etc.
- Airflow from adjacent zones or other units.
- Unheated or uncooled spaces behind the controller, such as outside walls or unoccupied spaces.
- Concealed pipes, air ducts, or chimneys in partition spaces behind the controller.

Location Considerations for Wireless zone sensors

Placement of the sensor is critical to proper operation (the receiver is factory mounted on fan-coil units). For most installations, barriers limit proper radio signal strength more than distance. For best radio transmission range and reliability, mount the receiver and sensor in line of sight. Where this is not possible, try to minimize the number of barriers between the pair of devices. In general, sheetrock walls and ceiling tiles offer little restriction to the transmission range for the sensor is as follows:

- Open range: 2,500 ft (packet error rate = 2%)
- Usable range: 200 ft
- Typical range: 75 ft

Fan Mode Switch Installation

The fan mode switch ships loose inside the unit accessory bag. Follow the steps below to install the fan mode switch.

Items needed:

2 x 4 electrical junction box

1. Remove the brown wire if not using a field-supplied damper.
2. Remove the terminals, cut and strip wires as required for installation.
3. Level and position a 2 x 4 electrical junction box.
4. Follow the instructions given in "Wall-Mounted Control Interconnection Wiring," p. 49 and route the wires as shown in the wiring diagram. Refer to the typical wiring diagram or to the unit specific diagram on the unit.
5. Position the fan mode switch over the junction box with the two screws supplied.

Zone Sensor Installation

Follow the procedure below to install the wired zone sensor module.

1. Note the position of the setpoint adjustment knob and gently pry the adjustment knob from the cover using the blade of a small screwdriver.
2. Insert the screwdriver blade behind the cover at the top of the module and carefully pry the cover away from the base.
3. To mount the sensor back plate:
   a. Hold the back plate against the mounting surface and mark the screw locations.
   b. Secure the back plate against the mounting surface using included hardware.
4. To install the zone sensor module to a standard junction box:
   a. Level and install a 2 x 4-in. junction box (installer supplied) vertically on the wall.
   b. Pull the control wires through the cutout. Attach the module to the wall using the screws provided.
5. Strip the insulation on the interconnection wires back 0.25-inch and connect to TB1 (for wired sensors).
6. Screw down the terminal blocks (for wired sensors).

7. To replace the cover:
   a. Hook the cover over the top of the back plate. Apply light pressure to the bottom of the cover until it snaps in place.
   b. Install the security screw into the bottom of the cover (if desired).

If installing a Tracer ZN510 or Tracer ZN520 zone sensor, see "Tracer ZN510, ZN520, and UC400 Options," p. 45 for more information.

Figure 17.

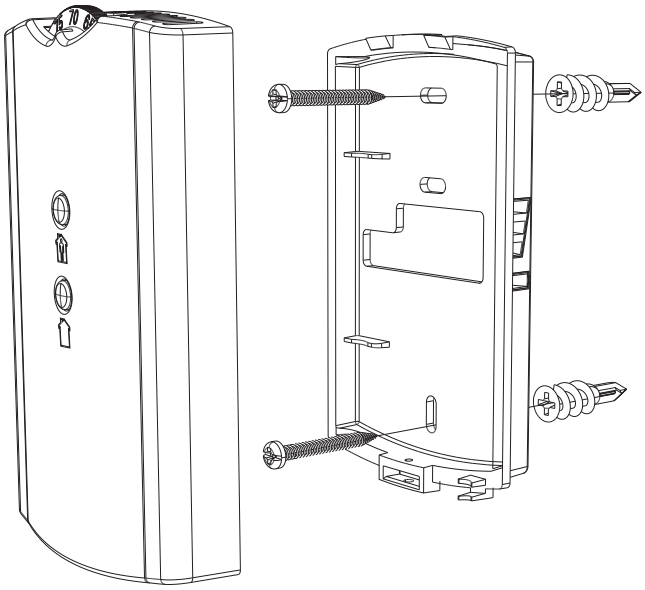

Figure 18.

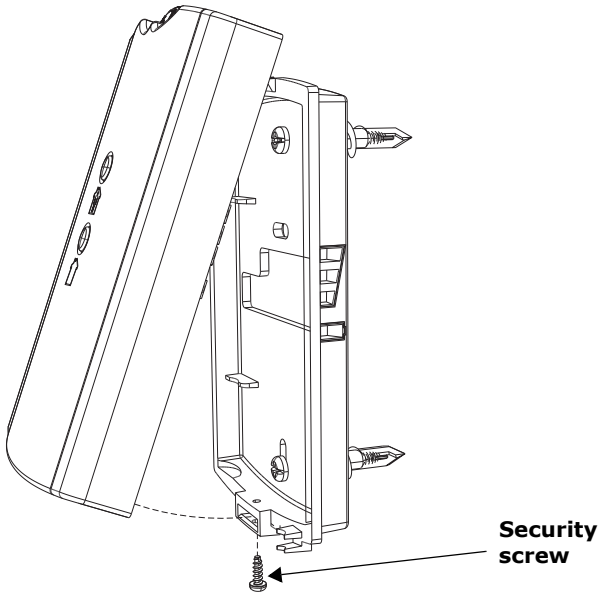

Installation—Electrical

Unit Wiring Diagrams

Specific unit wiring diagrams, based on unit options ordered, are provided inside each unit and can be easily removed for reference. Use these diagrams for connections or trouble analysis. Wiring diagrams are attached on the inside of the front panel of vertical cabinet and recessed models and on the fan and motor panel of vertical concealed and all horizontal models.

Supply Power Wiring

⚠WARNING

Hazardous Voltage w/Capacitors!

Disconnect all electric power, including remote disconnects and discharge all motor start/run capacitors before servicing. Follow proper lockout/tagout procedures to ensure the power cannot be inadvertently energized. For variable frequency drives or other energy storing components provided by Trane or others, refer to the appropriate manufacturer's literature for allowable waiting periods for discharge of capacitors. Verify with an appropriate voltmeter that all capacitors have discharged. Failure to disconnect power and discharge capacitors before servicing could result in death or serious injury.

For additional information regarding the safe discharge of capacitors, see PROD-SVB06A-EN

Refer to the unit nameplate to obtain the minimum circuit ampacity (MCA) and maximum fuse size (MFS) or maximum circuit breaker (MCB) to properly size field supply wiring and fuses or circuit breakers.

Refer to the unit operating voltage listed on the unit wiring schematic, submittal, or nameplate. Reference the wiring schematic for specific wiring connections.

NOTICE:

Use Copper Conductors Only!

Unit terminals are not designed to accept other types of conductors. Failure to use copper conductors may result in equipment damage.

Note: *All field wiring should conform to NEC and all applicable state and local code requirements. The control panel box is always on the end opposite the piping connections. Access the control box by removing the two screws that secure the front cover. This will allow the panel to be removed, to provide access to the electrical components.*

⚠WARNING

Hazardous Electrical Shorts!

Insulate all power wire from sheet metal ground. Failure to do so may cause electrical shorts that could result in death or serious injury.

If the unit does not have a disconnect switch, the power leads and capped ground wire are inside the control panel.

If the unit has a disconnect switch, the power leads are wired to the junction box switch on the control panel. Pull the capped ground wire into the junction box.

Electrical Grounding Restrictions

All sensor and input circuits are normally at or near ground (common) potential. When wiring sensors and other input devices to the Tracer controller, avoid creating ground loops with grounded conductors external to the unit control circuit. Ground loops can affect the measurement accuracy of the controller.

NOTICE:

Equipment Damage!

Unit transformer IT1 provides power to fan-coil unit only. Field connections directly to the transformer IT1 may create immediate or premature unit component failure.

All input/output circuits (except isolated relay contacts and optically isolated inputs) assume a grounded source, either a ground wire at the supply transformer to control panel chassis, or an installer supplied ground.

Wall-Mounted Control Interconnection Wiring

The installer must provide interconnection wiring to connect wall-mounted devices such as a fan mode switch or zone sensor module.

Refer to the unit wiring schematic for specific wiring details and point-to-point wiring connections. Dashed lines indicate field wiring on the unit wiring schematics. All interconnection wiring must conform to NEC Class 2 wiring requirements and any state and local requirements.

Refer to Table 3 for the wire size range and maximum wiring distance for each device.

Table 3. Maximum wiring distances for low voltage controls (ft)

Device	Wire Size	Range
Fan Speed Switch	14–22 AWG	500
Zone Sensor	16–22 AWG	200

Recommendation: Do not bundle or run interconnection wiring in parallel with or in the same conduit with any high-voltage wires (110 V or greater). Exposure of interconnection wiring to high voltage wiring, inductive loads, or RF transmitters may cause radio frequency interference (RFI). In addition, improper separation may cause electrical noise problems. Therefore, use shielded wire (Belden 83559/83562 or equivalent) in applications that require a high degree of noise immunity. Connect the shield to the chassis ground and tape at the other end.

Note: *Do not connect any sensor or input circuit to an external ground connection.*

Table 4. Free discharge and High static electrically commutated motors (ECMs) programmed to standard ECM mode

Unit Size	115 Volt				208–230 Volt				277 Volt			
	FLA		HP		FLA		HP		FLA		HP	
	1	2	1	2	1	2	1	2	1	2	1	2
2	3.1		0.22		1.8		0.22		1.6		0.24	
3	3.1		0.22		1.8		0.22		1.6		0.24	
4	3.1		0.22		1.8		0.22		1.6		0.24	
6	3.1		0.22		1.8		0.22		1.6		0.24	
8	3.1		0.22		1.8		0.22		1.6		0.24	
10	3.1	3.1	0.22	0.22	1.8	1.8	0.22	0.22	1.6	1.6	0.24	0.24
12	3.1	3.1	0.22	0.22	1.8	1.8	0.22	0.22	1.6	1.6	0.24	0.24

Table 5. Free discharge electrically commutated motors (ECMs) programmed to reduced FLA mode

Unit Size	115 Volt				208–230 Volt				277 Volt			
	FLA		HP		FLA		HP		FLA		HP	
	1	2	1	2	1	2	1	2	1	2	1	2
2	0.6		0.22		0.4		0.22		0.3		0.24	
3	0.6		0.22		0.4		0.22		0.3		0.24	
4	0.8		0.22		0.6		0.22		0.4		0.24	
6	1.1		0.22		0.8		0.22		0.6		0.24	
8	1.6		0.22		1.1		0.22		0.8		0.24	
10	0.7	1.2	0.22	0.22	0.5	0.8	0.22	0.22	0.4	0.6	0.24	0.24
12	0.7	1.3	0.22	0.22	0.5	0.9	0.22	0.22	0.4	0.7	0.24	0.24

Table 6. High static electrically commutated motors (ECMs) programmed to reduced FLA mode

Unit Size	115 Volt				208–230 Volt				277 Volt			
	FLA		HP		FLA		HP		FLA		HP	
	1	2	1	2	1	2	1	2	1	2	1	2
2	1.3		0.22		0.9		0.22		0.7		0.24	
3	1.3		0.22		0.9		0.22		0.7		0.24	
4	1.7		0.22		1.2		0.22		0.9		0.24	
6	2.3		0.22		1.6		0.22		1.2		0.24	
8	3.1		0.22		1.8		0.22		1.5		0.24	
10	1.4	2	0.22	0.22	1	1.4	0.22	0.22	0.7	1.1	0.24	0.24
12	1.5	2.8	0.22	0.22	1.1	1.8	0.22	0.22	0.8	1.4	0.24	0.24

Table 7. Low vertical free discharge electrically commutated motors (ECMs)

Unit Size	115 Volt		RPM		
	FLA	HP	H	M	L
3	3.1	0.22	1090	770	560
4	3.1	0.22	1090	750	560
6	3.1	0.22	1115	760	560

Note: Actual rpm will vary with application and configuration.

Table 8. Lowboy vertical free discharge electrically commutated motors (ECMs) programmed with reduced FLA mode

Unit Size	115 Volt		RPM		
	FLA	HP	H	M	L
3	0.5	0.22	1090	770	560
4	0.8	0.22	1090	750	560
6	1	0.22	1115	760	560

Note: Actual rpm will vary with application and configuration.

Table 9. Unit RPM

Unit Size	Free Discharge—Units with 2-Row Coils			Free Discharge—Units with 3- and 4-Row Coils		
	H	M	L	H	M	L
2	980	840	655	980	840	655
3	980	780	580	1080	800	600
4	1050	780	580	1080	800	600
6	1030	780	580	1080	800	600
8	1080	800	600	1080	800	600
10	1050	780	580	1080	800	600
	1030	780	580	1080	800	600
12	1050	780	580	1080	800	600
	1080	800	600	1080	800	600

Unit Size	High Static—Units with 2-Row Coils			High Static—Units with 3- and 4-Row Coils		
	H	M	L	H	M	L
2	1480	1110	865	1480	1110	865
3	1400	1175	860	1500	1355	1110
4	1475	1315	1070	1580	1375	1240
6	1400	1070	855	1475	1285	975
8	1475	1285	975	1475	1285	975
10	1475	1315	1070	1580	1375	1240
	1400	1070	855	1475	1285	975
12	1475	1315	1070	1580	1375	1240
	1475	1285	975	1475	1285	975

Note: Actual rpm will vary with application and configuration.

Table 10. Electric heat kW, low vertical fan-coil

Unit Size	Unit Voltage	kW	kW	kW	kW
3.0	115	1.0	1.5	2.0	
4.0	115	1.0	1.5	2.0	2.5
6.0	115	1.0	1.5	2.0	2.5

Note: Low vertical units are only available with electric heat in combination with the two-row cooling coil.

Minimum Circuit Ampacity (MCA) and Maximum Fuse Size (MFS) Calculations for Fan-Coils with Single Phase Electric Heat

Heater amps = (heater kW x 1000)/heater voltage

Note: *Use 120 V heater voltage for 115 V units. Use 240 V heater voltage for 230 V units.*

MCA = 1.25 x (heater amps + all motor FLAs)

MFS or HACR type circuit breaker = (2.25 x largest motor FLA) + second motor FLA + heater amps (if applicable)

HACR (heating, air-conditioning and refrigeration) type circuit breakers are required in the branch circuit wiring for all fan-coils with electric heat.

Select a standard fuse size or HACR type circuit breaker equal to the MCA. Use the next larger standard size if the MCA does not equal a standard size.

Standard fuse sizes are: 15, 20, 25, 30, 35, 40, 45, 50, 60 amps

Fan-coil electric heat MBh = (heater kW) (3.413)

Table 11. Force-Flo single-stage, max kW electric heat

Unit Size	Voltage	# Wires	Heater kW	Heater amps/ph
02	208/60/1	2	2.25	10.9
	240/60/1	2	3.0	12.5
	277/60/1	2	3.0	10.9
	208/60/3	3	2.25	6.3
	240/60/3	3	3.0	7.3
	480/60/3	4	3.0	3.7
03	208/60/1	2	4.5	21.7
	240/60/1	2	6.0	25.0
	277/60/1	2	6.0	21.7
	208/60/3	3	4.5	12.6
	240/60/3	3	6.0	14.5
	480/60/3	4	6.0	7.3
04	208/60/1	2	5.7	27.5
	240/60/1	2	7.5	31.3
	277/60/1	2	7.5	27.1
	208/60/3	3	5.7	15.9
	240/60/3	3	7.5	18.1
	480/60/3	4	7.5	9.1
06	208/60/1	2	7.9	38.0
	240/60/1	2	10.5	43.8
	277/60/1	2	10.5	38.0
	208/60/3	3	7.9	21.9
	240/60/3	3	10.5	25.3
	480/60/3	4	10.5	12.7

Note: All data based on individual units. Electric heat will operate only with fan at high speed.

Table 12. Force-Flo single stage, low kW electric heat

Unit Size	Voltage	# Wires	kW	amps /ph	kW	amps /ph	kW	amps /ph
02	208/60/1	2	0.8	3.7	1.5	7.3		
	240/60/1	2	1.0	4.2	2.0	8.4		
	277/60/1	2	1.0	3.7	2.0	7.3		
03	208/60/1	2	2.3	10.9				
	240/60/1	2	3.0	12.5				
	277/60/1	2	3.0	10.9				
	208/60/3	3	2.3	6.3				
	240/60/3	3	3.0	7.3				
	480/60/3	4	3.0	3.7				
04	208/60/1	2	2.3	10.9				
	240/60/1	2	3.0	12.5				
	277/60/1	2	3.0	10.9				
	208/60/3	3	2.3	6.3				
	240/60/3	3	3.0	7.3				
	480/60/3	4	3.0	3.7				
06	208/60/1	2	2.3	10.9	3.3	15.9		
	240/60/1	2	3.0	12.5	4.5	18.8		
	277/60/1	2	3.0	10.9	4.5	16.3		
	208/60/3	3	2.3	6.3	3.3	9.2		
	240/60/3	3	3.0	7.3	4.5	10.9		
	480/60/3	4	3.0	3.7	4.5	5.5		
08	208/60/1	2	2.3	10.9	3.3	15.9	4.5	21.7
	240/60/1	2	3.0	12.5	4.5	18.8	6.0	25.0
	277/60/1	2	3.0	10.9	4.5	16.3	6.0	21.7
	208/60/3	3	2.3	6.3	3.3	9.2	4.5	12.5
	240/60/3	3	3.0	7.3	4.5	10.9	6.0	14.5
	480/60/3	4	3.0	3.7	4.5	5.5	6.0	7.3
10	208/60/1	2	2.3	10.9	3.3	15.9	5.7	27.5
	240/60/1	2	3.0	12.5	4.5	18.8	7.5	31.3
	277/60/1	2	3.0	10.9	4.5	16.3	7.5	27.1
	208/60/3	3	2.3	6.3	3.3	9.2	5.7	15.9
	240/60/3	3	3.0	7.3	4.5	10.9	7.5	18.1
	480/60/3	4	3.0	3.7	4.5	5.5	7.5	9.1
12	208/60/1	2	2.3	10.9	3.3	15.9	6.6	31.8
	240/60/1	2	3.0	12.5	4.5	18.8	9.0	37.5
	277/60/1	2	3.0	10.9	4.5	16.3	9.0	32.5
	208/60/3	3	2.3	6.3	3.3	9.2	6.6	18.4
	240/60/3	3	3.0	7.3	4.5	10.9	9.0	21.7
	480/60/3	4	3.0	3.7	4.5	5.5	9.0	10.9

Note: All data based on individual units.

Table 13. Force-Flo two-stage electric heat

Unit Size	Voltage	# Wires	1st Stage kW	Total kW	Total amps/ph
02	208/60/1	2	0.8	2.3	10.9
	240/60/1	2	1.0	3.0	12.5
	277/60/1	2	1.0	3.0	10.9
	208/60/3	3	0.8	2.3	6.3
	240/60/3	3	1.0	3.0	7.3
	480/60/3	4	1.0	3.0	3.7
03	208/60/1	2	1.5	4.5	21.7
	240/60/1	2	2.0	6.0	25.0
	277/60/1	2	2.0	6.0	21.7
	208/60/3	3	1.5	4.5	12.6
	240/60/3	3	2.0	6.0	14.5
	480/60/3	4	2.0	6.0	7.3
04	208/60/1	2	1.9	5.7	27.5
	240/60/1	2	2.5	7.5	31.3
	277/60/1	2	2.5	7.5	27.1
	208/60/3	3	1.9	5.7	15.9
	240/60/3	3	2.5	7.5	18.1
	480/60/3	4	2.5	7.5	9.1
06	208/60/1	2	3.4	7.9	38.0
	240/60/1	2	4.5	10.5	43.8
	277/60/1	2	4.5	10.5	38.0
	208/60/3	3	3.4	7.9	21.9
	240/60/3	3	4.5	10.5	25.3
	480/60/3	4	4.5	10.5	12.7
08	208/60/1	2	4.5	10.1	48.8
	240/60/1	2	6.0	13.5	56.3
	277/60/1	2	6.0	13.5	48.8
	208/60/3	3	4.5	10.1	28.2
	240/60/3	3	6.0	13.5	32.5
	480/60/3	4	6.0	13.5	16.3
10	208/60/1	2	6.0	13.5	65.0
	240/60/1	2	8.0	18.0	75.0
	277/60/1	2	8.0	18.0	65.0
	208/60/3	3	6.0	13.5	37.6
	240/60/3	3	8.0	18.0	43.3
	480/60/3	4	8.0	18.0	21.7
12	208/60/1	2	6.8	15.0	72.3
	240/60/1	2	9.0	20.0	83.4
	277/60/1	2	9.0	20.0	72.3
	208/60/3	3	6.8	15.0	41.7
	240/60/3	3	9.0	20.0	48.2
	480/60/3	4	9.0	20.0	24.1

Note: When both stages are on, the electric heat will operate only when fan is in high speed. All data based on individual units.

ECM Overview and Setup

Overview

This addendum addresses changes to UniTrane Fan-Coil and Cabinet Heater units, integrating new Trane Brushless DC motors and controllers. This exciting new series delivers outstanding comfort, safety, and performance with greatly reduced energy consumption compared to traditional units with permanent split capacitance AC motors.

The new series of units will provide a long service life with proper installation and operation. The new system provides a high degree of flexibility and configurability, but the simplicity of customized factory configuration appropriate to most installations.

Very little intervention is needed by service and installation personnel in most applications; however, installers must read through the entire document before beginning installation of the new equipment.

This literature focuses on unit motors and controls, including three new circuit modules developed specifically for this series.

Figure 19. UniTrane fan-coil with Trane BLDC motor

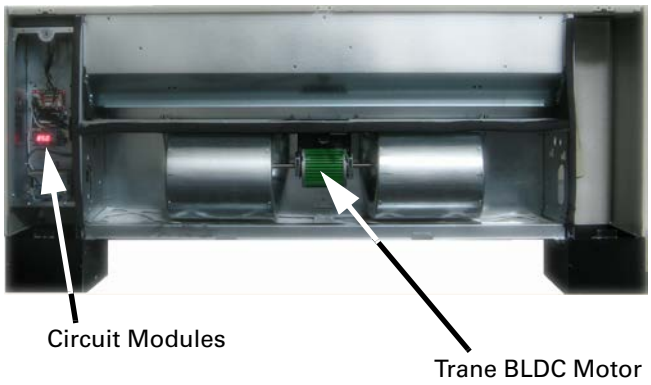

General Information

There are four primary components that enable the technology on your product:

1. Trane BLDC Motor
2. ECM Engine Board
3. Adapter Board
4. CSTI Adapter Board

The motors and modules are combined as systems, and cannot work without each other.

Trane BLDC Motor

Figure 20. Trane BLDC motor

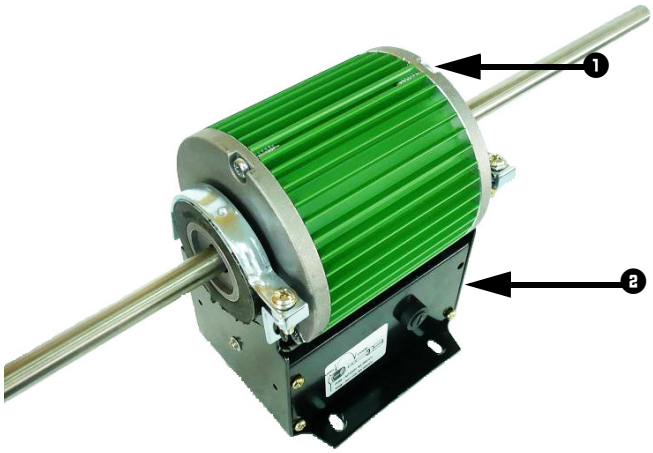

1. High Efficiency Brushless DC (BLDC) Motor Core
2. Motor Base Housing Potted Electronics Package

- The BLDC motor has integrated electronics, overload protection and short circuit protection. The motor contains no user-serviceable components inside.

NOTICE:

Equipment Damage!

The motor harness attached to the single plug to which the motor mates contains the very important motor voltage jumper and should not be modified or substituted. Failure to follow this instruction could result in equipment damage.

- The motor mates to the unit electrically via a single plug that contains both the operating voltage and the control signals that are needed for correct operation.
- The BLDC motor comes in both single shaft (sizes 200, 300, 400, 1000, and 1200) and double shaft (sizes 600, 800, 1000, and 1200) configurations.

  Note: *Sizes 1000 and 1200 have both a single shaft and a double shaft motor installed.*

- The BLDC motor has two voltage variations, 115/208-230V and 277V. Units with three-phase and neutral have motors wired to the L-N (as opposed to L-L). The 115/208-230V is configured for voltage by use of an external jumper. If the jumper is present the motor will be configured for use with 115V. The jumper must NOT be present for use with 208-230V.

ECM Engine Controller

Figure 21. ECM engine controller

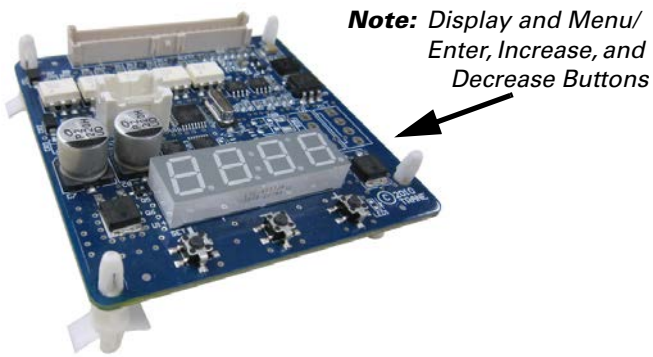

- The ECM engine controls and reports the performance of up to two Trane BLDC motors.
- The engine also co-ordinates the operation of the fan in response to electric heat behavior, and electric heat behavior in response to hydronic heat behavior and fan behavior.
- The engine incorporates a user interface that allows adjustment of certain unit parameters and provides constant feedback on motor operation.
- The engine integrates service and troubleshooting tools, including high-precision tachometers, fan status, and electric heat-enable indicators.
- The engine integrates a versatile configurable auxiliary temperature sensor.
- The engine incorporates various safety and lockout features, such as maintaining proper fan speeds, if electric heat is called for.

Standard Adapter Board

Figure 22. Adapter board

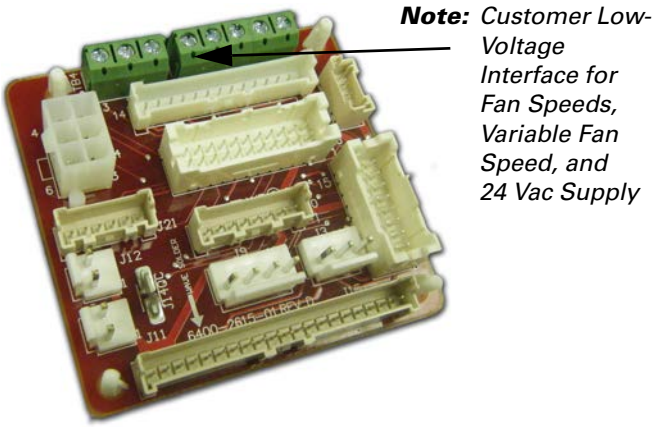

- The adapter allows direct customer interfacing through the use of terminal strips. Standard interfacing includes:
  - Fan Speeds (H, M, L) (for wall mounted fan speed switches)
  - Variable speed (0–10V) inputs
- The standard adapter board eliminates many separate wiring harnesses in the panel and allows simple, mistake-proofed single-plug interfacing of:
  - The ECM engine controller
  - Transformers
  - Motors
  - Valves
  - Dampers
  - Electric heat control
  - Fan speed switches
  - Main Power (except electric heat).
- Electric heat lockout circuits and fan proving circuits for electric heat are standard, and are pre-configured at the factory.

CSTI Adapter Board

Figure 23. CSTI adapter board

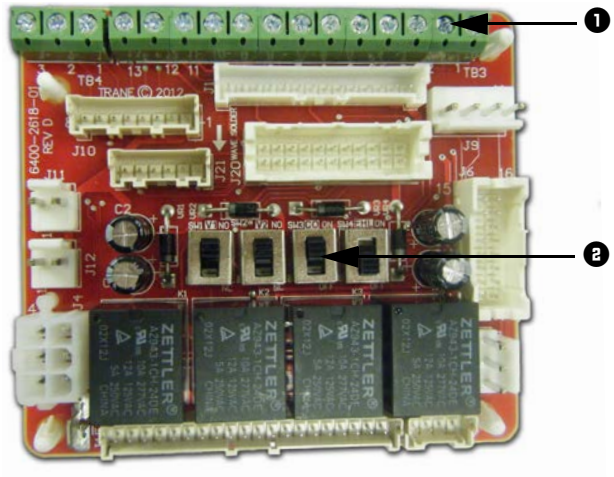

1. Customer Low-Voltage Interface for Valves, Electric Heat, Dampers, Fan Speeds, Variable Fan Speed, and 24 Vac Supply
2. Valve(s), Electric Heat, and Changeover Configuration Switches (Factory-Set)

- Performs all the functions of the standard adapter module, but in addition, provides convenient field connections to factory mounted end devices, including:
  - Valves
  - Dampers
  - Electric Heat
- Performs courtesy “inversion” of thermostatic inputs to match selected valves:

– Standard thermostats put out only “on” signals, however customer may select a normally open valve. A selectable switch allows the customer to invert the thermostat outputs for correct operation. These switches are set at the factory, but can be adjusted in the field.

– Sophisticated changeover function when used with a thermistor, that replaces traditional bi-metallic disc temperature switches:
  - Board will automatically honor only the appropriate customer request (Heat/Cool) depending on sensed water temperature.
  - Feature can be enabled or disabled with a selector switch—however, it is set correctly at the factory, based on customer choice of coil.
  - The bi-metallic disc temperature switch emulation is programmable, and dead-band range can be adjusted.
  - Electric heat lockout circuits and fan proving circuits for electric heat are standard, and are pre-configured at the factory.

Installation and Initial Setup

⚠WARNING

Hazardous Voltage w/Capacitors!

Disconnect all electric power, including remote disconnects and discharge all motor start/run capacitors before servicing. Follow proper lockout/tagout procedures to ensure the power cannot be inadvertently energized. For variable frequency drives or other energy storing components provided by Trane or others, refer to the appropriate manufacturer’s literature for allowable waiting periods for discharge of capacitors. Verify with an appropriate voltmeter that all capacitors have discharged. Failure to disconnect power and discharge capacitors before servicing could result in death or serious injury.

⚠WARNING

Safety Alert!

You MUST follow all recommendations below. Failure to do so could result in death or serious injury.

- **The BLDC motors contain capacitors which store residual energy. Please keep clear of the fan wheels for 5 minutes after the power has been removed from the system, as a power request with the motor powered off, could result in a very short period of actuation.**
- **All settings take effect immediately, including fan startup and enabling of electric heat. Caution should be taken to stay clear of hazardous voltages, moving parts and electric heat elements while making adjustments to the ECM engine board. If it is not practical to stay clear of these areas during adjustment of the ECM engine board, please contact Trane Global Parts for configuration kit that allows easy powering of the engine board outside of the unit with a 9V battery.**
- **The adapter boards contain high voltage. Configuration adjustments to the ECM engine board should be made through the SMALLER of the two low-voltage lids on the front of the control panel, through the low-voltage insulation/shielding.**
- **Changes to switch settings on the CSTI adapter board take effect immediately. Changes should be made to the CSTI configuration switches with the power off.**
- **Initial hookups to the CSTI and Standard Adapter board, including low voltage interconnections, must be made with the power off.**
- **Do not make connections to the motors or the adapter boards while power is ON. Do not remove connections to the motor or the adapter boards while the power is ON.**
- **Do not free spin the fan wheels with your hands while the unit is powered on. The system is constantly scanning and responding to the operational status of the motors.**

Installation and Initial Setup

Note: *Normally, the Trane BLDC motors are configured for soft ramps and transitions between speeds. However, to aid in commissioning of the unit, for approximately 10–15 minutes, the ramps will be shortened to quickly observe proper unit behavior and response to speeds.*

For new installations, all boards and motors are pre-installed and pre-configured according to the unit configuration, indicated by its model number.

Under normal and intended operation, the only required intervention specific to the new BLDC units is the wiring of:

- Wall-mounted low-voltage fan speed switch inputs to the adapter boards' terminal strips and 24 Vac tap to field-installed fan speed switch.
- Field-supplied controllers/thermostats to the adapter boards' terminal strips and 24 Vac power tap to field-supplied controller/thermostat.
- Adjustment and calibration of the variable speed inputs (VSP/0–10V) on the system.
- Adjustment, calibration or disabling of the optional auto-changeover function on CSTI units.

Otherwise, proceed with the mechanical, electrical and controls installations as defined in other sections of UNT-SVX07B-EN (*Installation, Operation, and Maintenance: UniTrane™ Fan-Coil and Force-Flo™ Air Conditioners*), while obeying the warnings communicated in this literature.

Proceed with the power on after installation, as defined in the other sections of UNT-SVX07B-EN.

Wall Mounted Low Voltage Fan Speed Switch/ Customer-Supplied Controller/Thermostat Instructions

⚠WARNING

Hazardous Voltage w/Capacitors!

Disconnect all electric power, including remote disconnects and discharge all motor start/run capacitors before servicing. Follow proper lockout/ tagout procedures to ensure the power cannot be inadvertently energized. For variable frequency drives or other energy storing components provided by Trane or others, refer to the appropriate manufacturer's literature for allowable waiting periods for discharge of capacitors. Verify with an appropriate voltmeter that all capacitors have discharged. Failure to disconnect power and discharge capacitors before servicing could result in death or serious injury.

⚠WARNING

Safety Alert!

You MUST follow all recommendations below. Failure to do so could result in death or serious injury.

- **Hook ups to the adapter boards should be made only with the power off to the unit.**
- **Only connect Class 2 voltages to the terminal blocks on the adapter boards that share a common with the unit mounted low-voltage transformer.**
- **Secure low voltage connections firmly to terminal strips, and strain-relieve all low voltage connection to prevent accidental detachment and possible short-circuiting of high voltage components. Care should be taken to avoid contact of low voltage wiring to the back side of the adapter boards, which contain high voltage.**

Note: *Specifications subject to change without notice. Consult the unit submittals and unit schematics before determining hookup requirements to the fan-coil unit. Terminal block positions, polarities and assignments are determined for specific unit configurations only. Signal assignments are indicated, for reference only.*

Both adapter boards come equipped with integrated terminal blocks to hook up to the field supplied/mounted Fan Speed Switches and external controls. Connections should be made to the screw terminals with wires between 16 AWG and 24 AWG, with a ~4–5-mm wire strip length. The terminal blocks have 5-mm spacing, and are equipped with 3-mm screws. The field-supplied wires should have an insulation rating of 600V.

Standard Adapter Board Field Connections

Figure 24. Standard adapter board field connections

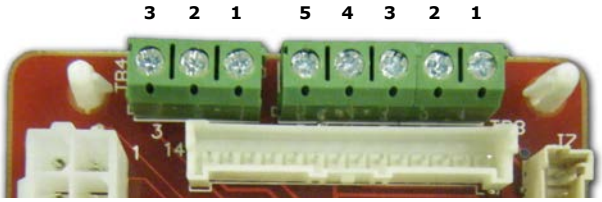

1. VSP 10V
2. VSP 0–10V
3. VSP DC COM

1. 24 Vac Y (gnd)
2. 24 Vac B (com)
3. High
4. Medium
5. Low

All customer connections to the two adapter boards are made to the terminal strips on both adapter boards.

Screw terminal blocks provide convenient access to fan controls for High, Medium, Low, and Variable speed. In addition, a courtesy 10 Vdc supply is provided for use with

an external potentiometer or rheostat. The 10 Vdc supply supports up to 10 mA draw.

TB3 (right five positions) is normally used to provide 24V hookup to a wall mounted fan speed switch, and to accept the returns from the switch for High, Medium, and Low requests.

TB4 (left three positions) is normally used to control the system with a 0–10 Vdc output from a thermostat/controller, or a fan control rheostat/potentiometer.

The terminal block functional assignments and polarity are shown for reference only, and the schematics that ship with each unit should be consulted before wiring. Wiring assignments are configured for each unit.

CSTI Adapter Board Field Connections

Figure 25. CSTI adapter board field connections

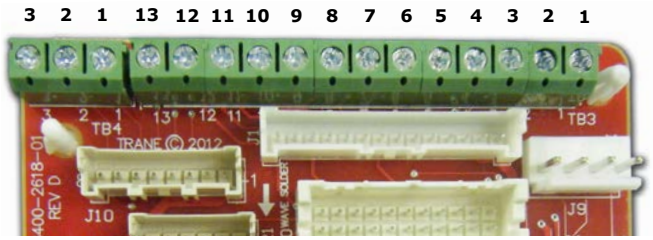

1. VSP 10V
2. VSP 0–10V
3. VSP DC COM

1. 24 Vac Y (hot)
2. Damper Open
3. 24 Vac Y (gnd)
4. High
5. Medium
6. Low
7. V1Op/Cooling
8. Not used
9. Not used
10. V1C1 (not std)
11. V2Op/EH1St/Heating
12. V2C1/EH2St (not std)
13. Dmp CI (not std)

The CSTI adapter board provides all the hookups of the standard adapter board, but in addition provides hookups for valve control (main and auxiliary coils), electric heat control and damper control.

Screw terminal blocks provide convenient access to fan controls and to end device control. In addition, a courtesy 10 Vdc supply is provided for use with an external potentiometer or rheostat. The 10 Vdc supply supports up to 10 mA draw.

TB3 (right 13 positions) is normally used to provide:

1. 24 Vac supply to a wall fan speed switch or
2. 24 Vac supply to a field-installed unit-mounted controller, or a wall-mounted controller or thermostat
3. Inputs (returns) for thermostatic fan control: High, Medium, and Low
4. Inputs (returns) for cooling/heating requests
5. Inputs (returns) for electric heat requests
6. Inputs (returns) for damper operation requests

TB4 (left three positions) is normally used to control the system with a 0–10 Vdc input from a thermostat/controller with a variable speed output, or a fan control rheostat.

The terminal block functional assignments and polarity are shown for reference only, and the schematics that ship with each unit should be consulted before wiring. Wiring assignments are configured for each unit.

Adjustment and Configuration of the Engine Board

⚠WARNING

Safety Alert!

You MUST follow all recommendations below. Failure to do so could result in death or serious injury.

- **All settings take effect immediately, including fan startup and enabling of electric heat. Caution should be taken to stay clear of hazardous voltages, moving parts and electric heat elements while making adjustments to the ECM engine board. If it is not practical to stay clear of these areas during adjustment of the ECM engine board, please contact Trane Global Parts for configuration kit that allows easy powering of the engine board outside of the unit with a 9V battery.**
- **Configuration adjustments to the ECM engine board should be made through the SMALLER of the two low-voltage lids on the front of the control panel, through the low-voltage insulation/shielding.**

⚠CAUTION

Burn Hazard!

On electric heat units, certain parameter values are locked out to prevent overheating of the unit. These functions will appear to be saved; however, they will not be accepted if the Electric Heat Protection setting is "On". Do not change the Electric Heat Protection setting to "Off" and make changes to the protected settings unless you are programming an unconfigured service replacement board to match the unit settings on a ECM configuration label. Failure to follow this instruction could result in the unit overheating and becoming hot to the touch, which could result in minor or moderate injury, and/or equipment damage.

Note: *The engine board functions and unit specific settings are summarized on the ECM engine configuration label affixed to the back side of the control panel low voltage lid on every unit.*

Figure 26. ECM engine label

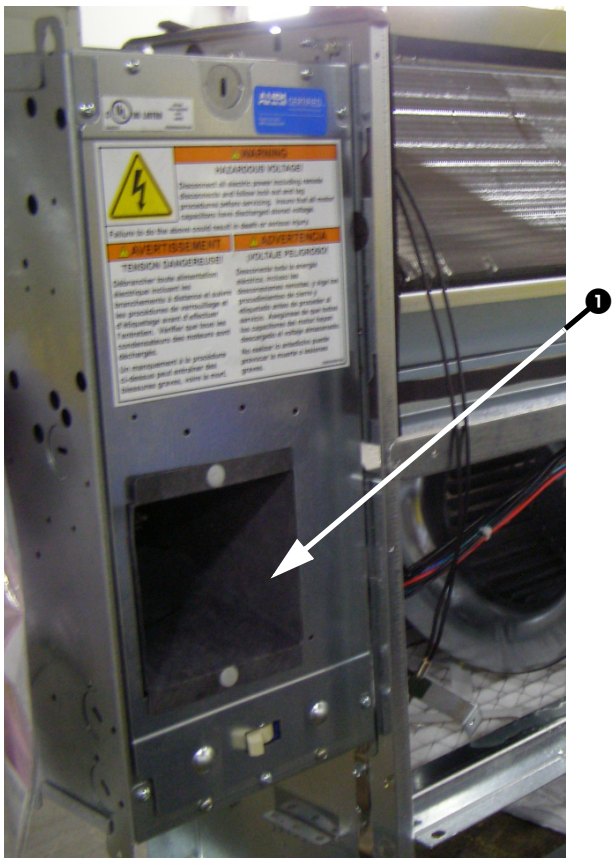

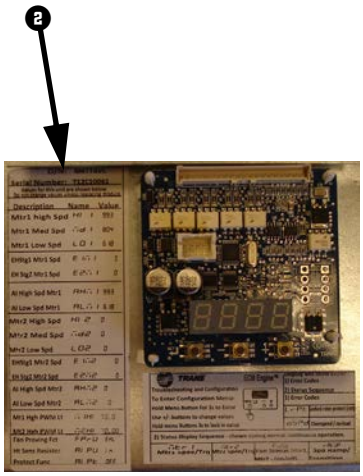

1. To check status, configuration, or to change settings on the engine board with the power on the unit, detach the low voltage access lid and look or reach through the low voltage access panel.
2. The ECM engine label is affixed to the back or front of the low voltage access lid.

The ECM engine board features a nested menu integrated user interface (UI) that supports:

1. Status display for instant touch-free confirmation of unit operation.
2. Configuration parameter and value display and modification changes (using integrated menu/set buttons).
3. Error code prioritized reporting.

Status Display

Figure 27. Status display

The ECM engine board contains a four-digit, seven-segment display that is used to present information in a format close to real-world language, while having a small-form factor. Most characters are immediately recognizable; however, please consult Table 14 and Table 15 for the graphical representation of each alphanumeric character.

Table 14. Screen representation of alphabetical characters

A	B	C	D	E	F	G	H	I	J	K	L	M
A	b	C	d	E	F	9	H	I	J	H	L	m

N	O	P	Q	R	S	T	U	V	W	X	Y	Z
n	0	P	q	r	5	t	U	u	w	H	y	2

Table 15. Screen representation of numeric characters

1	2	3	4	5	6	7	8	9	0
1	2	3	4	5	6	7	8	9	0

Note: *Characters on the ECM engine board display appear in red, on a black background.*

The display contains decimal positions as well that change position with each parameter, as appropriate. Under normal conditions (i.e., with no error code displayed), the status will loop the following message:

RPM Mode ***RUNNING/ FAN STATUS*** ***CONTINUOUS LOOP*** Displayed when: 1) No error codes are present 2) Motor has completed ramping	mtr 1 0000 → 2000	Indicates the current rpm of Motor 1 in the system. “0” rpm here indicate that no fan speed has been requested.
	mtr2 0000 → 2000	Indicates the current rpm of Motor 2 in the system. “0” rpm here indicate a fan off condition OR a fan “missing” condition[(a)].
	FSt 1 YES / no	Indicates the status being calculated or Fan Motor 1. If “off,” this indicates that either: 1) No fan speed is being requested or 2) The fan performance is failing to meet the request; refer to “Troubleshooting (ECM),” p. 126 for additional information. If “on,” this indicates that the fan is performing correctly and will be used to report fan status correctly, depending on FPru mode.
	FSt2 YES / no	Indicates the status being calculated or Fan Motor 2. If “off,” this indicates that either: 1) No fan speed is being requested or 2) The fan performance is failing to meet the request; refer to “Troubleshooting (ECM),” p. 126 for additional information. 3) If the target speed for Motor 2 is “0,”this is used to indicate a missing motor[(a)]. If “on,” this indicates that the fan is performing correctly and will be used to report fan status correctly, depending on FPru mode.
	EhEn YES / no	Indicates that the temperature sensing circuit has calculated a logical “on” based on the settings of the following parameters: A i2ti / A i2b / A iPU

(a) Motor 1 is the only motor in sizes 200, 300, 400, 600, and 800. Sizes 1000 and 1200 units contain two motors: Motor 1 (single shaft) and Motor 2 (double shaft).

Configuration parameter and value display and modification changes

The ECM engine board's on-board user interface is easy to use and supports:

1. Verification/auditing of on-board parameter settings (read-only)
2. Adjustment of the on-board settings (write)

Figure 28. User interface input buttons

The user interface has three input buttons, from left to right:

1. "Menu/Set"
2. "Decrement"
3. "Increment"

Each button has several different actuation levels depending on length of press, and what the UI is currently displaying.

Table 16. Button actuation levels

	Menu/Set	
Button	**Duration**	**Action**
Short Press in Status Display	<1 sec	None
Short Press in Configuration Display		Toggles between parameter name and value without saving (abandons value if changed).
Long Press/Hold in Status Display	>3 sec	Enters the configuration menu
Long Press/Hold in Configuration Display	>3 sec	If on a parameter name, toggles to the value. If on a parameter value, saves the value settings and returns to the parameter name as confirmation.

	Decrement	
Button	**Duration**	**Action**
Short Press in Status Display	<1 sec	None
Short Press in Configuration Display	<1 sec	Scrolls through parameter names, or decreases value of parameter.
Long Press/Hold in Status Display	>3 sec	N/A
Long Press/Hold in Configuration Display	>3 sec	Faster scroll through parameter name, or faster decrease of values of parameters.

	Increment	
Button	**Duration**	**Action**
Short Press in Status Display	<1 sec	None
Short Press in Configuration Display	<1 sec	Scrolls through parameter names, or increases value of parameter.
Long Press/Hold in Status Display	>3 sec	N/A
Long Press/Hold in Configuration Display		Faster scroll through parameter name, or faster increase of values of parameters.

Configuration Use Examples

Example 1. To view the value of parameters without saving. In this case we wish to verify that the "Low Speed Value" for Motor 1 is set correctly to 800 rpm.

We start with the ECM engine scrolling status display and proceed as follows:

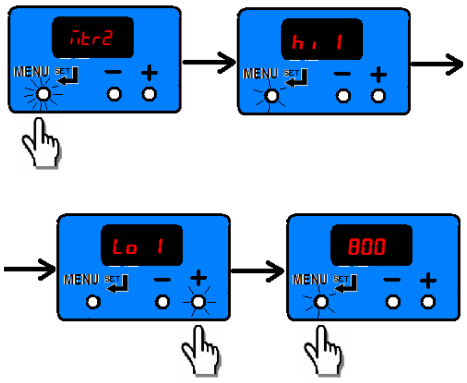

Example 2. We wish to change the change the value of Low Speed to 820 rpm:

We will continue from the previous example as shown below, using a long press to "save" the new desired value.

Note: *If the display has timed out and returned to the status loop, repeat Example 1 to arrive back at this example's starting point.*

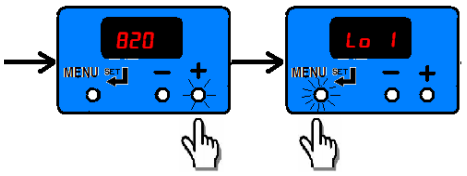

Example 3. We wish to double check to see if the value of "820 rpm" has been saved.

Note: *If the display has timed out and returned to the status loop, repeat Example 1 and Example 2 to arrive back at this example's starting point.*

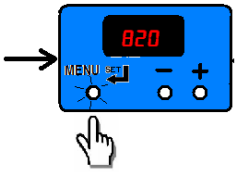

Example 4. We wish to change the value of a protected value on an electric heat unit.

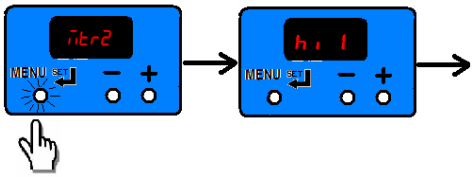

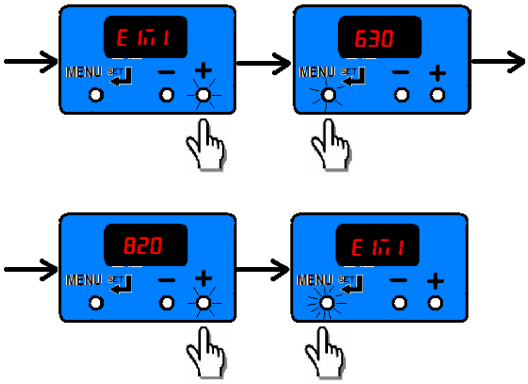

It would appear that the value has been changed, but if we check the value, we notice that the original value has been retained.

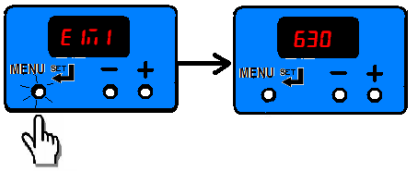

Priority / Error Display

Under special conditions, the status display will interrupt briefly to prioritize display of events:

Notes:

- *During error displays, the user interface will be disabled, until the error is removed or resolved.*
- *If changes are made to parameters and saved, most settings take effect immediately. Any change to fan speeds will take effect and cause the configuration menu to exit immediately to begin tracking speeds via the on-board tachometer.*
- *Where practical, the unit will offer "limp-in" performance, but to ensure safe operation, certain unit functions will be disabled. For example, if one motor fails, the unit will display an error code, but the second motor (if present) will continue to operate. However, to ensure safe operation, the electric heat (if present) will be disabled.*
- *If a error occurs while the configuration menu is in effect, all unsaved values will be discarded and the error codes will be displayed.*

Error Codes Displayed during abnormal operation.	mtr 1 LOCH	Indicates a locked rotor condition of Motor 1. The motor will be locked out until the cause has been resolved, and the power cycled; refer to "Troubleshooting (ECM)," p. 126 for resolution details. Motor 2 will continue to operate, but will not be monitored. Fan Status function, if being used, will report an inoperative motor. Electric heat and changeover heat will be shut down.
	mtr2 LOCH	Indicates a locked rotor condition of Motor 2. The motor will be locked out until the cause has been resolved, and the power cycled; refer to "Troubleshooting (ECM)," p. 126 for resolution details. Motor 1 will continue to operate, but will not be monitored. Fan Status function, if being used, will report an inoperative motor. Electric heat and changeover heat will be shut down.
	mtr 1 OSPd	Indicates that Motor 1 has experienced a run-away or over speed condition, and has been shutdown. The unit will offer limited "limp-in" performance, and Motor 2 will continue to operate, but will not be monitored. Fan Status function, if being used, will report an inoperative motor. Refer to "Troubleshooting (ECM)," p. 126: to reset, the cause must be resolved and the power to the unit cycled. Electric heat and changeover heat will be shut down.
	mtr2 OSPd	Indicates that Motor 2 has experienced a run-away or over speed condition, and has been shutdown. The unit will offer limited "limp-in" performance, and Motor 1 will continue to operate, but will not be monitored. Fan Status function, if being used, will report an inoperative motor. Refer to "Troubleshooting (ECM)," p. 126: to reset, the cause must be resolved and the power to the unit cycled. Electric heat and changeover heat will be shut down.
	rAmP 0000 → 2000 2000 → 0000	Indicates the motor is transitioning between speeds, ramping up or down. The message "RAMP" is briefly displayed, followed by the target speed for "Motor 1" only. Once the target speed has been reached, the status display will resume operation.
	u 123	On power on, the version of software is briefly displayed, followed by the results of a POST (power on self test).

Initial Setup and Configuration

After connections of power and hookup of customer installed controls/fan speed switches and under normal/operative conditions the only adjustments needed to be made to the ECM engine board during commissioning of the unit are:

- Adjustment and calibration of the variable speed inputs (VSP/0–10V) on the system, where applicable.
- Adjustment, calibration or disabling of the optional auto-changeover function on CSTI units, where applicable.

In addition, the CSTI adapter board offers configurability that can be used in special cases to adjust the following operation of the unit:

- Courtesy cooling/main valve logic inversion relays for use with normally open valves
- Courtesy heating/auxiliary valve logic inversion relays for use with normally open valves
- Changeover function for use with changeover coils (in conjunction with the ECM engine board)

The switches are factory-set based on the model number configuration as ordered; however, the information is provided below to aid in the understanding of the operation of the system.

Configuration

Configuring the ECM Engine Controller

Adjustment and Calibration of the Variable Speed Inputs (VSP/0–10V)

⚠WARNING

Hazardous Voltage w/Capacitors!

Disconnect all electric power, including remote disconnects and discharge all motor start/run capacitors before servicing. Follow proper lockout/tagout procedures to ensure the power cannot be inadvertently energized. For variable frequency drives or other energy storing components provided by Trane or others, refer to the appropriate manufacturer's literature for allowable waiting periods for discharge of capacitors. Verify with an appropriate voltmeter that all capacitors have discharged. Failure to disconnect power and discharge capacitors before servicing could result in death or serious injury.

⚠WARNING

Safety Alert!

You MUST follow all recommendations below. Failure to do so could result in death or serious injury.

- **The adapter boards contain high voltage. Connections to the adapter boards/changes to the CSTI configuration switches should be made only with the power to the unit disconnected.**
- **The adapter boards contain high voltage. Configuration adjustments to the ECM engine board should be made through the SMALLER of the two low-voltage lids on the front of the control panel, through the low-voltage insulation/shielding.**
- **All settings take effect immediately, including fan startup and enabling of electric heat. Caution should be taken to stay clear of hazardous voltages, moving parts and electric heat elements while making adjustments to the ECM engine board. If it is not practical to stay clear of these areas during adjustment of the ECM engine board, please contact Trane Global Parts for configuration kit that allows easy powering of the engine board outside of the unit with a 9V battery.**

⚠CAUTION

Burn Hazard!

On electric heat units, certain parameter values are locked out to prevent overheating of the unit. These functions will appear to be saved; however, they will not be accepted if the Electric Heat Protection setting is "On". Do not change the Electric Heat Protection setting to "Off" and make changes to the protected settings unless you are programming an unconfigured service replacement board to match the unit settings on a ECM configuration label. Failure to follow this instruction could result in the unit overheating and becoming hot to the touch, which could result in minor or moderate injury, and/or equipment damage.

NOTICE:

Equipment Damage!

You MUST follow all recommendations below. Failure to do so could result in equipment damage.

- **Care should be taken in the system to use a single 24 Vac supply system to avoid damage to equipment.**
- **Care should be taken to observe proper polarity and grounding in the hookup of the 0–10V system to avoid damage to equipment.**

Notes:

- *The 0–10V (variable speed) inputs are available for use, but are not mandatory. The Trane Brushless DC system*

comes standard with three to five field-accessible thermostatic inputs (with adjustable speed), so the use of the 0–10V inputs is optional.

- *All inputs are independently configurable and simultaneously accessible, and the ECM engine will choose the highest user (configured and requested) speed. However, care should be taken with customer controls to avoid contention of signals.*

The ECM engine and adapter boards offer standard, normalizing 0–10V Variable speed fan inputs for use with field supplied controllers or thermostats. These inputs can be used as the only input to the system, used in addition to the thermostatic (H, M, L) inputs, or not used at all. The inputs are accessible via 1TB4 on the adapter boards.

The ECM engine is factory configured to drive the unit to a minimum speed (catalogue "low speed" value), defined as ALi1 and ALi2 once the analog (0–10V) input is honored. As a default, the noise floor/threshold is set to 3 percent (0.3V). At 0.3V, the system will drive the motors to the speeds defined in defined as ALi1 and ALi2. If the analogue input goes to 10V, the ECM engine will drive the motor to maximum speed (normally catalogue "high speed" value), defined as Ahi1 and Ahi2, and will change speed in response.

Although the ECM engine board ships with settings that will work with most 0–10 Vdc outputs, calibration should be performed to maximize response range and controller authority. Typically, the only settings needed for the VSP inputs are calibration of the signal to ensure that the system obeys the following rules:

1. The minimum output from the field supplied controller is met with a positive fan response. That is, we do not want the uFLr setting on the ECM engine board to be higher than the minimum output of the field supplied controller, as the ECM engine will "ignore" a portion of the usable range of the customer fan variable speed output.
2. The minimum output from the field supplied controller is not significantly greater than the floor setting uFLr floor. If the minimum output of the controller is significantly greater than the floor setting, the first point that the motor will turn on will be above the ALi1 and ALi2 value. The full range of motor control will not be fully utilized in this case, as the motor will never reach the low speed motor analogue input scaling value for Motor 1 and Motor 2 (ALi1 and ALi2)
3. The maximum output of the controller needs to be 10V, or if lower, needs to be compensated using the analog input scaling value, A.Sc to normalize the operational range. As a default, the scaling value is set to 1.00 (so a voltage of 5V will be graded as 5V); however, to compensate for long runs or lower max voltages (i.e., lower than 10.00), the scaling value can be increased accordingly to maximize operational range.

   For example, if the voltage is only reaching a value of 9.0V at the adapter boards, then the A.Sc parameter should be set to (10/9=) 1.111. If left un-calibrated, the unit will never attain maximum speeds, defined as Ahi1 and Ahi2.
4. The ECM engine can accept slightly over-biased inputs up to 12 Vdc, and the A.Sc parameter can be set to a value less than 1.0 to compensate.

VSP Setup Examples

Example 1: uFLr set too high and A.Sc set too high

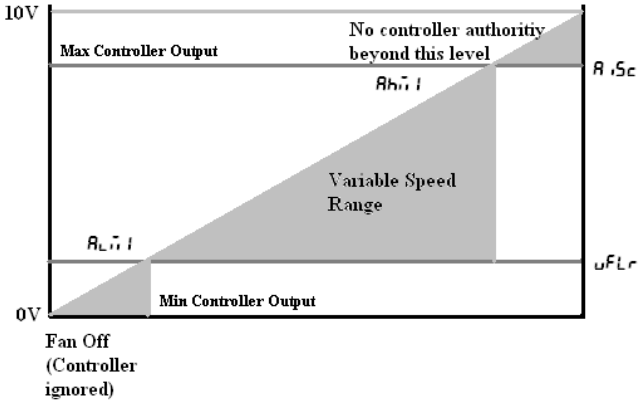

Example 2: uFLr set too high but A.Sc set correctly

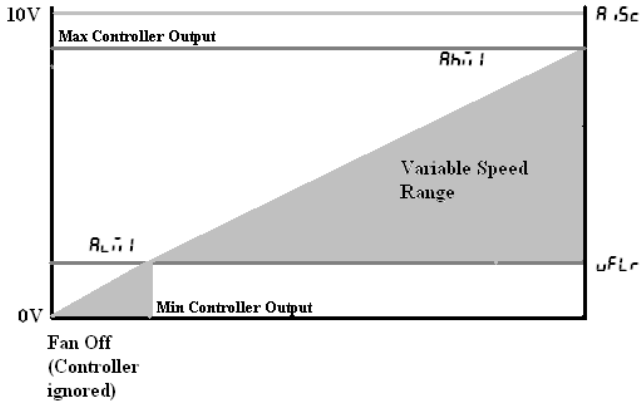

Example 3: uFLr set correctly and A.Sc set correctly

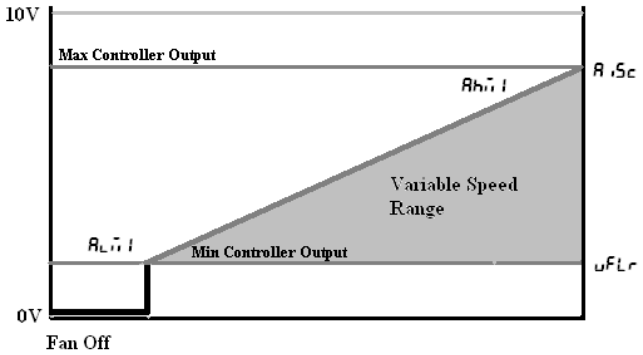

Use of Potentiometer/Rheostat For VSP

⚠WARNING

Hazardous Voltage w/Capacitors!

Disconnect all electric power, including remote disconnects and discharge all motor start/run capacitors before servicing. Follow proper lockout/tagout procedures to ensure the power cannot be inadvertently energized. For variable frequency drives or other energy storing components provided by Trane or others, refer to the appropriate manufacturer's literature for allowable waiting periods for discharge of capacitors. Verify with an appropriate voltmeter that all capacitors have discharged. Failure to disconnect power and discharge capacitors before servicing could result in death or serious injury.

⚠WARNING

Safety Alert!

You MUST follow all recommendations below. Failure to do so could result in death or serious injury.

- **The adapter boards contain high voltage. Connections to the adapter boards/changes to the CSTI configuration switches should be made only with the power to the unit disconnected.**
- **Configuration adjustments to the ECM engine board should be made through the SMALLER of the two low-voltage lids on the front of the control panel, through the low-voltage insulation/shielding.**
- **All settings take effect immediately, including fan startup, enabling of electric heat. Caution should be taken to stay clear of hazardous voltages, moving parts and electric heat elements while making adjustments to the ECM engine board. If it is not practical to stay clear of these areas during adjustment of the ECM engine board, please contact Trane Global Parts for configuration kit that allows easy powering of the engine board outside of the unit with a 9V battery.**

A courtesy 10-Vdc supply is provided that can support a 10-mA draw. The use of a 1K or a 10K potentiometer is recommended, and only a stand-alone potentiometer (not shared with any other electrical system) should be employed. When a simple potentiometer is used as depicted in Figure 29, the uFLr setting will define a null-zone (off).

The typical connection is depicted in Figure 29; however, please consult the unit schematic for the most updated instruction, as Figure 29 is provided as reference only.

Figure 29. Typical connection

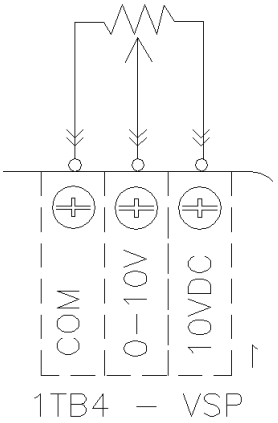

Adjustment or Disabling of Optional Auto-Changeover Function on CSTI Units

⚠WARNING

Hazardous Voltage w/Capacitors!

Disconnect all electric power, including remote disconnects and discharge all motor start/run capacitors before servicing. Follow proper lockout/tagout procedures to ensure the power cannot be inadvertently energized. For variable frequency drives or other energy storing components provided by Trane or others, refer to the appropriate manufacturer's literature for allowable waiting periods for discharge of capacitors. Verify with an appropriate voltmeter that all capacitors have discharged. Failure to disconnect power and discharge capacitors before servicing could result in death or serious injury.

⚠WARNING

Safety Alert!

You MUST follow all recommendations below. Failure to do so could result in death or serious injury.

- **The adapter boards contain high voltage. Connections to the adapter boards should be made only with the power to the unit disconnected.**
- **All settings take effect immediately, including fan startup, enabling of electric heat. Caution should be taken to stay clear of hazardous voltages, moving parts and electric heat elements while making adjustments to the ECM engine board. If it is not practical to stay clear of these areas during adjustment of the ECM engine board, please contact Trane Global Parts for configuration kit that allows easy powering of the engine board outside of the unit with a 9V battery.**

The ECM engine board provides additional temperature controlled logic to help coordinate certain electric-heat and valve logic functions:

- On units with electric heat and a changeover coil, the engine board and adapter boards are pre-configured to cause hydronic heat and electric heat to be mutually exclusive:
  - On units with ComfortLink™ controls (Tracer ZN controllers), the Tracer ZN board will serve as the primary logic to select the electric heat only if hot water is not available, but the engine board will service as a backup lockout.
  - On units with Customer Supplied Controllers (CSTI units), the engine board and CSTI board will serve as the primary lockout.
- On CSTI units selected with a changeover coil configuration, the engine board is factory configured to work in conjunction with the CSTI adapter board to provide a useful auto-changeover function. Traditionally, a fixed setpoint bi-metallic disc temperature switch is used to provide changeover with customer controls; however, the engine board has defeatable and configurable bi-metallic disc temperature switch emulation when combined with the CSTI adapter board. The ECM engine is preconfigured for typical values, so changeover settings do not necessarily need to be changed.
  - An NTC thermistor is supplied and affixed to the supply pipes where applicable. The ECM engine has several settings that affect the operation of the changeover function:
    - FPru parameter should normally be set to EHL or EhFS to use the changeover functions.
    - EhL parameter should be chosen if the unit has a changeover coil without electric heat.
    - EhFS parameter should be chosen if the unit has a changeover coil with electric heat. Generally, this will perform the same as the EhL parameter but in addition, will disable heating function on electric heat and on the changeover coil if there are fan failures. The auxillary heating coil function will continue to operate and respond to the customer heating request.
- A iPU parameter should be set to In for CSTI units and to OUt for ComfortLink controller units.
- A i2T parameter defines the temperature at which the engine board will close the triac onboard the ECM engine (if FPru parameter is set correctly).
- A i2b parameter defines the temperature at which the engine board will open the triac onboard the ECM Engine (if FPru parameter is set correctly). By leaving a “gap” between the make and break value, we will simulate hysteresis of a real bi-metallic disc temperature switch.
- When combined with the CSTI adapter board, the bi-metallic disc temperature switch emulation and the electric heat lockout function will work when the switches are set correctly.

Adjustment and Configuration of the CSTI Adapter Board

⚠CAUTION

Burn Hazard!

If SW4 is turned off, the factory/customer controller/ thermostat will be able to actuate the electric heat while hot water is available or if the fans have failed. This switch should NOT be turned off if the unit schematic indicates that it should be on, to prevent overheating of the unit (due to simultaneous electric heat and hydronic heat actuation, or failure of the fan) and to use the preferred hydronic heating over electric heat. Failure to follow this instruction could result in the unit overheating and becoming hot to the touch, which could result in minor or moderate injury, and/or equipment damage.

For CSTI units, the board mounted switches have to be set appropriately to enable the desired functionality.

Figure 30. CSTI adapter board: board-mounted switches

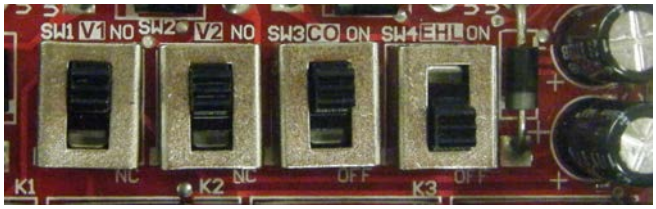

Table 17. CSTI adapter board: switch functions

Switch (L-R)	SW1	SW2	SW3	SW4
Function	Valve one operation logic	Valve two operation logic	Changeover Function	Electric Heat / Fan Proving Function
UP position (towards terminal strip)	Normally Open Valve	Normally Open Valve	Changeover Function ON	Electric Heat / Fan Proving Function
DOWN position (towards black relays)	Normally Closed Valve	Normally Closed Valve	Changeover Function OFF	Electric Heat / Fan Proving Function

Notes:

- *All switches are factory-set based on customer configuration of the unit model number. The unit will function correctly as shipped; however, the switch functions and positions are depicted for customer convenience and for service and troubleshooting aids.*
- *SW3 and SW4 work in conjunction with settings on the ECM engine controller. Simple activation of*

changeover and electric heat lockout function may not work correctly unless the ECM engine board is configured to perform these functions.

- *Customers are advised to locate the changeover coil temperature sensor on the bypass line if possible, to avoid measuring standing water temperature.*
- *If a 4-pipe unit with changeover function is selected, the heating input will drive the main coil if hot water is detected, but will always drive the auxiliary coil or electric heat (where available).*
- *Where electric heat is available with a changeover coil, the electric heat is factory-configured to be deactivated if there is hot water available and if there is a fan failure.*

The CSTI board comes with courtesy valve inversion relays that allow both normally open and normally closed two-position valves to be used with simple thermostats that do not have the configurability to adapt to the customer choice of valves. Independent switches, SW1 and SW2, are provided for 2-pipe or 4-pipe units, or 2-pipe units with an optional reheat coil. The functions of SW1 and SW2 is downstream of the changeover function (SW3 and ECM engine board). Decisions made by the changeover circuits will be flowed to the inversion circuits, if they are selected.

SW3 enables or disables the changeover function for 2-pipe changeover coil units, or 4-pipe units where the coil has both a heating/cooling circuit and a heating circuit piped internally. If SW3 is turned off, the changeover function will be disabled, and the unit will then be configured as a cooling only coil, a heating only coil, or a combination of cooling only/heating only coil. Thus, customer cooling requests will drive the main valve, and heating requests will drive the auxiliary valve.

The changeover function is designed to work with customer controllers that request heating or cooling (based on customer request), but have coil water temperatures that are “changed over” from heating to cooling (or cooling to heating) depending on the season and the building equipment available. Customer thermostats MUST be hooked to the correct terminal strip locations (V1 and V2) for the changeover function to work.

Cooling

In general, the (CSTI) changeover function will provide cooling if:

1. A unit is factory configured with a changeover coil (cooling/heating) as the only coil or as the main coil portion.
2. SW3 on the CSTI adapter board is turned on, and the FPru parameter set to EHL or EhFS to use the changeover functions.
   a. EhL parameter should be chosen if the unit has a changeover coil without electric heat.
   b. EhFS parameter should be chosen if the unit has a changeover coil with electric heat. Generally, this will perform the same as the EhL parameter but will in addition, disable the heating function on electric heat and on the changeover coil heat if there are fan failures. The auxiliary heating coil valve will continue to respond to customer heating requests.
3. The ECM engine has sensed that there is cold water available on the supply/bypass line for the changeover coil. In this case, “cold” water is inferred by the ECM engine if:
   a. A 10K NTC thermistor (similar to Trane part number X13790374010) is wired properly to the engine board, through the crossover cables and CSTI adapter boards.
   b. The input impedance of the thermistor circuit must be set correctly (the A iPU parameter should be set to in for CSTI units).
   c. The temperature sensed is lower than the A i2ri parameter.
   d. The A i2b parameter is higher than the A i2ri parameter.
   e. The temperature is not in the dead-band between the A i2b parameter and the A i2ri parameter (in this case, previous state will be retained).
4. The customer thermostat is properly hooked up the input strip 1TB3, and is requesting cooling input (V1) based on the customer cooling setpoint being lower than the space temperature.

Heating

In general, the (CSTI) changeover function will provide heating if:

1. A unit is factory-configured with a changeover coil (cooling/heating) as the only coil or as the main coil portion.
2. SW3 on the CSTI adapter board is turned on, and the FPru parameter set to EHL or EhFS to use the changeover functions.
   a. EhL parameter should be chosen if the unit has a changeover coil without electric heat.
   b. EhFS parameter should be chosen if the unit has a changeover coil with electric heat. Generally, this will perform the same as the EhL parameter but will in addition, disable the heating function on electric heat and on the changeover coil heat if there are fan failures. The auxiliary heating coil valve will continue to respond to customer heating requests.
3. The ECM engine has sensed that there is hot water available on the supply/bypass line for the changeover coil. In this case, “hot” water is determined if:
   a. A 10K NTC thermistor (similar to Trane part number X13790374010) is wired properly to the engine board, through the crossover cables and CSTI adapter boards.

b. The input impedance of the thermistor circuit must be set correctly (the A iPU parameter should be set to in for CSTI units).

c. The temperature sensed is higher than the A i2b parameter.

d. The A i2b parameter is higher than the A i2n parameter.

e. The temperature is not in the dead-band between the A i2b parameter and the A i2n parameter (in this case, previous state will be retained).

4. The customer thermostat is properly hooked up the input strip 1TB3, and is requesting heating input (V2) based on the customer heating set point being higher than the space temperature.

5. The heating input on 1TB3 will drive the main changeover coil IF conditions 1–4 are satisfied, but will always drive the auxiliary coil valve (if present). Electric heat will be locked out (where present) if hot water is available since SW4 will be factory set to "ON" in these units.

SW4 selects the electric heat lockout function, where we will lock out the electric heat circuit based on either:

1. The presence of hot water in the changeover coil section (if the FPru parameter is set to EHL).

2. Abnormal behavior of the fan/s (if the FPru parameter is set to FnSt).

3. Or a combination of both the presence of hot water or abnormal behavior of the fan/s (if the FPru parameter is set to EHFS).

4. The preceding three examples depend on the inference of the engine board that hot water is present. In this case, "hot" water is determined if:

   a. The temperature sensed is higher than the A i2b parameter.

   b. The A i2b parameter is higher than the A i2n parameter.

   c. The temperature is not in the dead-band between the A i2b parameter and the A i2n parameter (in this case, previous state will be retained).

   d. The input impedance of the thermistor circuit must be set correctly (the A iPU parameter should be set to in for CSTI units).

Configuring the ECM Engine Board

Every Trane Fan-Coil or Cabinet Heater unit with BLDC motors will have modules specifically configured at the factory for the operation of that unit. The ECM engine configuration label is affixed to the low-voltage access lid on the outside of the control panel (see Figure 26, p. 58 and Figure 31, p. 68). The ECM engine label may be on the back-side of the low voltage access lid, depending on the unit configuration.

The serial number of each unit and the custom configuration settings specific to that unit will be printed on the label for convenient matching of labels/settings to specific units. Programming a unit with the settings from another unit will result in abnormal operation. The label contains four important sections:

1. How to enter the configuration menu
2. The description and meaning of the Error Codes
3. The description and meaning of the status display
4. The parameter names and values specific to that unit

Figure 31. ECM engine label

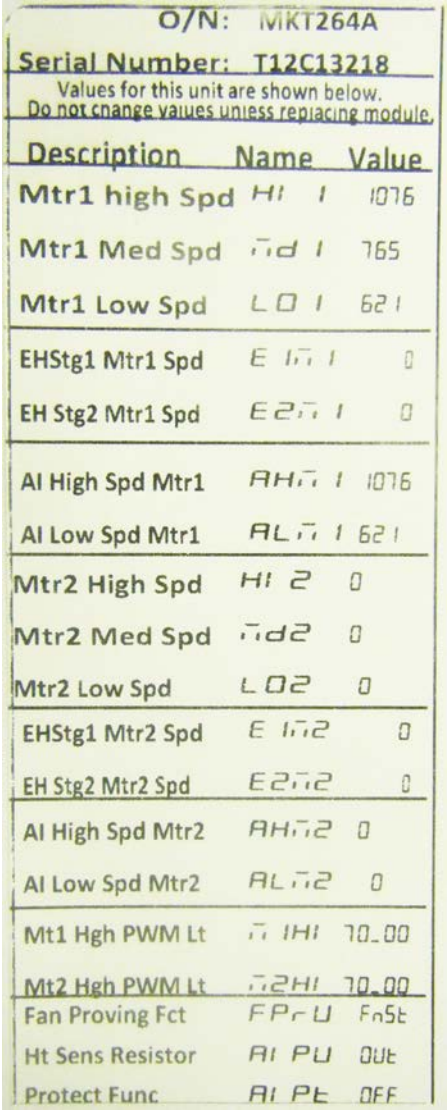

Note: *This label is provided for reference only, as an example, and should not be used to configure the unit.*

Configuration Settings of the ECM Engine Board

⚠WARNING

Safety Alert!

You MUST follow all recommendations below. Failure to do so could result in death or serious injury.

All settings take effect immediately, including fan startup and enabling of electric heat. Caution should be taken to stay clear of hazardous voltages, moving parts and electric heat elements while making adjustments to the ECM engine board. If it is not practical to stay clear of these areas during adjustment of the ECM engine board, please contact Trane Global Parts for configuration kit that allows easy powering of the engine board outside of the unit with a 9V battery.

The adapter boards contain high voltage. Configuration adjustments to the ECM engine board should be made through the SMALLER of the two low-voltage lids on the front of the control panel, through the low-voltage insulation/shielding.

⚠CAUTION

Burn Hazard!

On electric heat units, certain parameter values are locked out to prevent overheating of the unit. These functions will appear to be saved; however, they will not be accepted if the Electric Heat Protection setting is "On". Do not change the Electric Heat Protection setting to "Off" and make changes to the protected settings unless you are programming an unconfigured service replacement board to match the unit settings on a ECM configuration label. Failure to follow this instruction could result in the unit overheating and becoming hot to the touch, which could result in minor or moderate injury, and/or equipment damage.

NOTICE:

Equipment Damage!

Do not change the PWM output voltage settings as motor damage could occur.

Note: *The engine board functions and unit specific settings are summarized on the ECM engine configuration label affixed to the back side of the control panel low voltage lid, on every unit.*

The following table lists the parameter names and typical settings of the ECM engine board, for reference only.

Additional Notes:

1. *This list is applicable only to Fan-coil and Force-Flo products.*
2. *Do not change the electric heat protection settings if your unit has electric heat.*
3. *If the format setting for rpm values are not correct (i.e., not four-digit: XXXX), please check the operation mode of the ECM engine board* mod 1 *and* mod 2 *and motor signal output format* SI 91 *and* SI 92.

Table 18. Configuration settings of the ECM engine board

Description on Unit Label	User Interface Name	Typical User Interface Value	Description	Notes: These notes are provided for reference only, and the ECM engine label must be used as the ultimate guide for setting up an engine board on specific units.
Mtr 1 High Spd	Hi 1	1080	Sets the high-speed rpm for Motor 1.	Do not exceed 1700 rpm. Do not set under 450 rpm. On units with two motors, the single shafted motor is designated as Motor 1. If the unit has only one motor, all seven speed settings for the second motor (Hi 2, Md 2, Lo 2, E1M2, E2M2, ALM2, AHM2) should be set to zero. Analog inputs below the uFLr setting will be rejected. Note: E1M1, E1M2, E2M1, E2M2 settings are locked out on units with electric heat.
Mtr 1 Med Spd	Md 1	777	Sets the medium-speed rpm for Motor 1.	
Mtr 1 Low Spd	Lo 1	632	Sets the low-speed rpm for Motor 1.	
EHStg1 Mtr1 Spd	E1M1	0	Assigns an rpm to be associated with a call for 1st stage electric heat, for Motor 1 (only on units equipped with electric heat).	
EH Stg 2 Mtr 1 Spd	E2M1	0	Assigns an rpm to be associated with a call for 2nd stage electric heat, for Motor 1 (only on electric heat equipped units).	
AI High Spd Mtr 1	AhM1	0	Sets the maximum rpm for Motor 1 for the maximum input value of the analog input.	
AI Low Spd Mtr 1	ALM1	0	Sets the minimum turn-on rpm for Motor 1, when the analog input becomes active.	
Mtr 2 Hgh Spd	Hi 2	0	Sets the high-speed rpm for Motor 2.	
Mtr 2 Med Spd	Md 2	0	Sets the medium-speed rpm for Motor 2.	
Mtr 2 Low Spd	Lo 2	0	Sets the low-speed rpm for Motor 2.	
EHStg1 Mtr2 Spd	E1M2	0	Assigns an rpm to be associated with a call for 1st stage electric heat, for Motor 2 (only on electric heat equipped units).	
EH Stg 2 Mtr 2 Spd	E2M2	0	Assigns an rpm to be associated with a call for 2nd stage electric heat, for Motor 2 (only on electric heat equipped units).	
AI High Spd Mtr 2	AhM2	0	Sets the maximum rpm for Motor 2 for the maximum input value of the analog input.	
AI Low Spd Mtr 2	ALM2	0	Sets the minimum turn-on rpm for Motor 2, when the analog input becomes active.	
Op Mode Mtr 1	Mod1	rPM	Sets the operational mode for Motor 1.	Must be set to rPM for fan-coil products.
Op Mode Mtr 2	Mod2	rPM	Sets the operational mode for Motor 2.	Must be set to rPM for fan-coil products.
Mtr 1 Out Format	S191	PWM	Sets the interface type for Motor 1.	Must be set to PWM for fan-coil products.
Mtr 2 Out Format	S192	PWM	Sets the interface type for Motor 2	Must be set to PWM for fan coil products.
Mtr 1/2 PWM Freq.	FrEq	100	Sets the PWM frequency, for cases when the PWM outputs are used.	On fan-coil units, the PWM must not be changed.
Mtr 1 PWM Volt	M1uL	5	Sets the PWM voltage, for cases when the PWM outputs are used.	This setting must NOT be changed, as damage to the motor may occur!
Mtr 2 PWM Volt	M2uL	5	Sets the PWM voltage, for cases when the PWM outputs are used.	This setting must NOT be changed, as damage to the motor may occur!
Mt1 Hgh PWM Lt	M1hi	70	Sets the maximum output % that the controller will request from Motor 1.	This envelope protection value should not be altered.
Mt1 Low PWM Lt	M1Lo	19.5	Sets the minimum maximum output % that the controller will request from Motor 1.	This envelope protection value should not be altered.
Mt2 Hgh PWM Lt	M2hi	70	Sets the maximum output % that the controller will request from Motor 2.	This envelope protection value should not be altered.
Mt2 Low PWM Lt	M2Lo	19.5	Sets the minimum maximum output % that the controller will request from Motor 2.	This envelope protection value should not be altered.
Mt1 Ovspd RPM	rPM1	3000	Selects the rpm above which the Motor 1 will be assumed to be in an overspeed condition and will need to be shut down.	This envelope protection value should not be altered.

Table 18. Configuration settings of the ECM engine board (continued)

Description on Unit Label	User Interface Name	Typical User Interface Value	Description	Notes: These notes are provided for reference only, and the ECM engine label must be used as the ultimate guide for setting up an engine board on specific units.
Mt2 Ovspd RPM	rPm2	3000	Selects the rpm above which the Motor 2 will be assumed to be in an overspeed condition and will need to be shut down.	This envelope protection value should not be altered.
Fan Proving Fct	FPru	FnSt	Selects which mode should be assigned to the Binary output circuit, depending on unit type.	This setting has to be correct for proper unit operation of electric heat and changeover units.
AI Boost Amp	AiSc	1	Boosts or attenuates the analog input signal to compensate for long wire runs.	A value of 1 should be used if no voltage level compensation is needed (i.e., voltage peak is at 10 Vdc).
AI Floor	uFLr	0.3	Rejects noise on the analog input lines and sets up the engine board to turn on if the thermostat or controller is commanding its analog outputs on.	
PulsePerRev	FdbH	12	Sets up the tachometer function to be compatible with the on-board motor and for correct speed calculation and calibration.	Do not change this setting as this is critical to proper unit operation.
P Value Mtr 1	PuL1	0.03	Sets up the on board closed loop control to control Motor 1 with proper stability.	Do not change this setting.
I Value Mtr 1	IuL1	0.03	Sets up the on board closed loop control to control Motor 1 with proper stability.	Do not change this setting.
P Value Mtr 2	PuL2	0.03	Sets up the on board closed loop control to control Motor 2 with proper stability.	Do not change this setting.
I Value Mtr 2	IuL2	0.03	Sets up the on board closed loop control to control Motor 2 with proper stability.	Do not change this setting.
Ht Sens Mk Val F	Ai2m	85	Sets the make value for the engine board triac output based on the thermistor input.	Operation also depends on FPru, Ai2b, and AiPU settings.
Ht Sens Bk Val F	Ai2b	90	Sets the break value for the engine board triac output based on the thermistor input.	Operation also depends on FPru, Ai2m, and AiPU settings.
Ht Sens Resistor	AiPU	oUt	Sets the input impedance of the thermistor input.	Should be pre-set to “OUT” for Tracer ZN controllers.
Mt 1 Ramp %/sec	m1rP	3	Sets the ramp rate for Motor 1, in % per second.	
Mt 2 Ramp %/sec	m2rP	3	Sets the ramp rate for Motor 2, in % per second	
EH Rmp Accel	EhrP	5	Sets the acceleration factor for the electric heat inputs.	Is used to force faster ramps when electric heat is requested.
Ramp MAX Time	mhrP	5	Sets the maximum ramp time for both Motor 1 and Motor 2 (in seconds).	Overrides the ramp rates m1rP and m2rP if the calculated ramp time exceeds mhrP.
EH Fan off delay	EHdL	0	Selects how long the fan needs to stay on after an electric heat request has been turned off.	Not used on fan-coil unit.
Lck Rtr Protect	LrPt	on	Selects whether to use the on-board locked rotor protection function.	This will shut down the affected motor, if rotational response is not detected.

Table 18. Configuration settings of the ECM engine board (continued)

Description on Unit Label	User Interface Name	Typical User Interface Value	Description	Notes: These notes are provided for reference only, and the ECM engine label must be used as the ultimate guide for setting up an engine board on specific units.
Protect Funct	EhPt	on	This function protects settings on the board that affect the safety of the electric heat system.	Do NOT change this setting. This setting locks out the following parameters from being changed, for safe operation of the unit.
				A iPU
				FPru
				A iiH
				A ibH
				E 1i1
				E 1i2
				E2i1
				E2i2
				S ig
				iod1
				iod2
				i1H1
				i1Lo
Rmp dft (auto rst)	rPdF	oFF	This function shortens the ramps for faster unit commissioning and auto-resets to off after approximately 15 minutes of power-on operation.	To aid in commissioning of the unit, for approximately 10–15 minutes, the ramps will be shortened to quickly observe proper unit behavior and response to speeds.
Soft Rev	SoFt	u2.00	Displays the software version.	

Fan Speed Response Verification

1. After performing controller specific commissioning, observe the display on the ECM engine board with the power on, to the unit. The ECM engine display should display a looping status indicator as follows:

   itr1 → 0 → itr2 → 0 → FSt1 → 0FF → FSt2 → OFF → EhEn → On

Notes:

- *The* EhEn *indicator is unit-specific and may indicate "Off" at this point; refer to thermistor function for more information.*
- *A representative fan speed of "1080" rpm are shown in the example below. Each unit is factory-configured differently and will have different settings for different fan speeds.*

2. While the unit remains on, exercise the fan controls on the unit, either directly or indirectly through request for unit heat/cool. Observe the fan spinning, and then observe the fan display on the ECM engine board. It should display a looping status indicator as follows:

   For a size 200, 300, 400, 600, or 800 unit (using typical unit operating fan speeds):

   itr1 → 1080 → itr2 → 0 → FSt1 → On → FSt2 → OFF → EhEn → On

   For a size 1000 or 1200 unit (using typical unit operating fan speeds):

   itr1 → 1080 → itr2 → 1080 → FSt1 → On → FSt2 → on → EhEn → On

Note: *The* EhEn *indicator is unit-specific and may indicate "Off" at this point; refer to thermistor function for more information.*

3. *OPTIONAL:*

   While the fan is running, if practical, change the fan speeds and observe the display temporarily indicate: rAiP

   Exercise all fan speeds to ensure positive unit response and to validate any field wiring.

Congratulations! Your new Trane BLDC Engine/Motor system is performing properly.

Wired Controllers—Communication Wiring

Wiring Installation (ZN510 and ZN520)

Tracer ZN510 and ZN520 controllers are LonTalk® devices that interface with the Trane Tracer Summit building management system. Reference the unit wiring diagram or submittals.

Ground shields at each Tracer ZN510 and ZN520, taping the opposite end of each shield to prevent any connection between the shield and anther ground. Refer to the most recent version of Trane publication CNT-SVX04A-EN (*Tracer ZN.520 Unit Controller: Installation, Operation and Programming Guide*) for the communication wiring diagram.

Communication wire must conform to the following specification:

1. Shielded twisted pair 18 AWG
2. Capacitance 23 (21–25) picofarads (pF) per foot
3. Listing/Rating—300 V 150C NEC 725-2 (b) Class 2 Type CL2P
4. Trane Part No. 400-20-28 or equivalent, available through Trane BAS Buying Group Accessories catalog.

Note: *Communication link wiring is a shielded, twisted pair of wire and must comply with applicable electrical codes.*

Follow these general guidelines when installing communication wiring on units with a Tracer ZN510 or ZN520 controller:

- Maintain a maximum 5000 ft. aggregate run.
- Install all communication wiring in accordance with the NEC and all local codes.
- Solder the conductors and insulate (tape) the joint sufficiently when splicing communication wire. Do not use wire nuts to make the splice.
- Do not pass communication wiring between buildings because the unit will assume different ground potentials.
- Do not run power in the same conduit or wire bundle with communication link wiring.

Note: *You do not need to observe polarity for LonTalk communication links.*

Device Addressing

LonTalk devices are given a unique address by the manufacturer. This address is called a Neuron ID. Each Tracer ZN510 and ZN520 controller can be identified by its unique Neuron ID, which is printed on a label on the controller's logic board. The Neuron ID is also displayed when communication is established using Tracer Summit or Rover service tool. The Neuron ID format is 00-01-64-1C-2B-00.

Wire Characteristics

Controller communication-link wiring must be low capacitance, 18-gage, shielded, twisted pair with stranded, tinned-copper conductors. For daisy chain configurations, limit the wire run length to 5,000 ft. Truck and branch configurations are significantly shorter. LonTalk wire length limitations can be extended through the use of a link repeater.

Recommended Communication Wiring Practices

The following guidelines should be followed while installing communication wire.

- LonTalk is not polarity sensitive. Trane recommends that the installer keep polarity consistent throughout the site.
- Only strip away two inches maximum of the outer conductor of shielded cable.
- Make sure that the 24 Vac power supplies are consistent in how they are grounded. Avoid sharing 24 Vac between LonTalk UCMs.
- Avoid over-tightening cable ties and other forms of cable wraps. A tight tie or wrap could damage the wires inside the cable.
- Do not run LonTalk cable alongside or in the same conduit as 24 Vac power.
- In an open plenum, avoid lighting ballasts, especially those using 277 Vac.
- Do not use a trunk and branch configuration, if possible. Trunk and branch configurations shorten the distance cable can be run.

Wiring Installation (Tracer UC400)

This section provides information about wiring the UC400 controller. For more detailed information, refer to the *Tracer UC400 Programmable Controller Installation, Operation, and Maintenance Manual* (BAS-SVX20C-EN, or the most recent revision).

Wiring Overview Outline

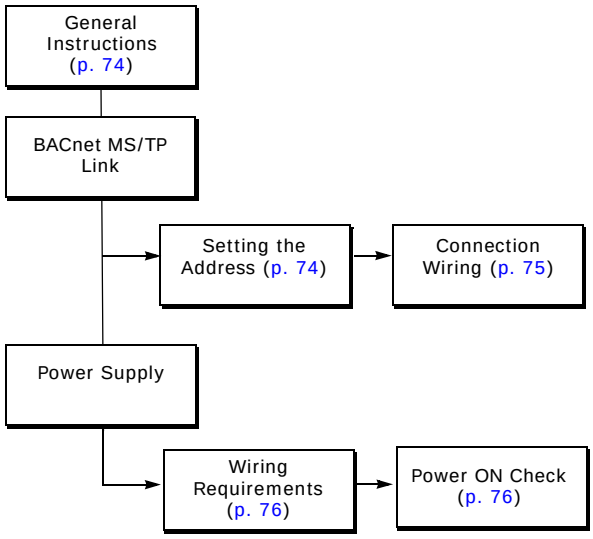

General Instructions

Conformance to Regulatory Standards

All wiring must comply with the National Electrical Code (NEC™) and local electrical codes.

Connecting Wires to Terminals

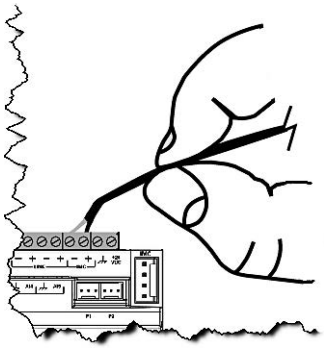

To connect wires to the UC400 controller or the expansion modules:

1. Strip the wires to expose 0.28 inch (7 mm) of bare wire.
2. Insert the wire into a terminal connector.
3. Tighten the terminal screw to 0.5 to 0.6 N-m (71 to 85 ozf-in or 4.4 to 5.3 lbf-in.).
4. Tug on the wires after tightening the screws to ensure all wires are secure as shown on the right.

BACnet MS/TP Link

Setting the Address

The rotary address dials on the UC400 controller serve one or two purposes depending upon the network: they are always used for the MAC Address, which is sometimes all or part of the BACnet Device ID (refer to the illustration below).

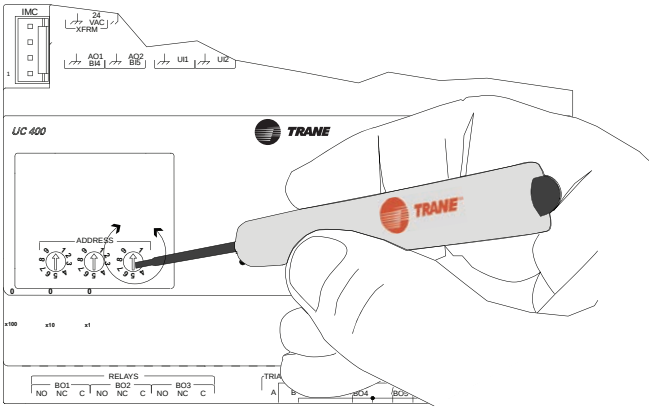

Use a 1/8 inch (3.2 mm) flathead screwdriver to set rotary address dials. Dials rotate in either direction.

MAC Address. The MAC Address is required by the RS-485 communication protocol on which BACnet operates. A UC400 controller can use a MAC Address from 001 to 120.

Important: *Each device on the link must have a unique MAC Address/Device ID. The controller rotary addresses should be sequentially set, with no gaps in the numbering, starting with 001 on each link (for example 001, 002, 003, 004 and so on). A duplicate address or a 000 address setting will interrupt communications and cause the Tracer SC device installation process to fail.*

BACnet Device ID. The BACnet Device ID is required by the BACnet network. Each device must have a unique number from 001 to 4094302.

BACnet networks without a Tracer SC system controller

On BACnet networks without a Tracer SC system controller, the Device ID can be assigned one of two ways:

- It can be the same number as the MAC Address, determined by the rotary address dials on the UC400 controller. For example, if the rotary address dials are set to 042, both the MAC Address and the BACnet Device ID are 042.
- It can be soft set using the Tracer TU service tool. If the BACnet Device ID is set using the Tracer TU service tool, the rotary address dials *only* affect the MAC Address, they do not affect the BACnet Device ID.

BACnet networks with a Tracer SC system controller

On BACnet networks with a Tracer SC system controller, the Device ID for the UC400 controller is always soft set by the system controller using the following scheme illustrated below.

Note: *The BACnet Device ID is displayed as the Software Device ID on the Tracer TU* ***Controller Settings*** *page in the* ***Protocol*** *group.*

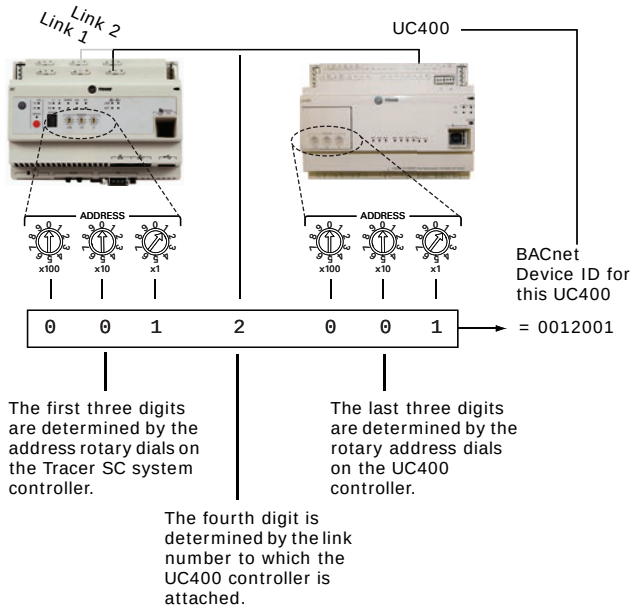

Connection Wiring

Field-supplied BACnet MS/TP link wiring must be installed in compliance with NEC and local codes. The wire must be low-capacitance, 18-gauge, stranded, tinned-copper, shielded, twisted-pair. The illustration below shows an example of BACnet link wiring with multiple UC400 controllers.

Note: *For more details, refer to* Wiring Guide: Unit Controller Wiring for the Tracer SC™ System Controller *(BAS-SVN03D-EN, or the most recent revision).*

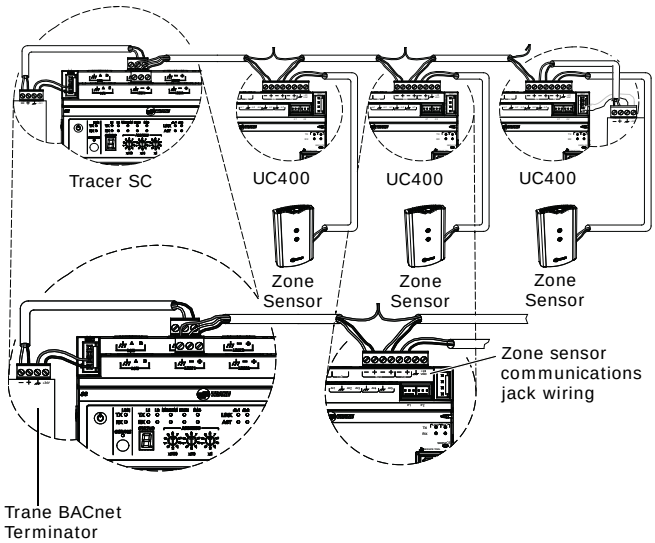

Power Supply

Please read all of the warnings, cautions, and notices below before proceeding with this section.

⚠WARNING

Hazardous Voltage!

Disconnect all electric power, including remote disconnects before servicing. Follow proper lockout/tagout procedures to ensure the power can not be inadvertently energized. Failure to disconnect power before servicing could result in death or serious injury.

⚠CAUTION

Personal Injury and Equipment Damage!

After installation, make sure to check that the 24 Vac transformer is grounded through the controller. Failure to check could result in personal injury and/or damage to equipment. Measure the voltage between chassis ground and any ground terminal on the UC400 controller. Expected result: Vac £ 4.0 V

NOTICE:

Avoid Equipment Damage!

Sharing 24 Vac power between controllers could cause equipment damage.

A separate transformer is recommended for each UC400 controller. The line input to the transformer must be equipped with a circuit breaker sized to handle the maximum transformer line current.

If a single transformer is shared by multiple UC400 controllers:

- The transformer must have sufficient capacity.
- Polarity must be maintained for every UC400 controller powered by the transformer.

Important: *If the polarity is inadvertently reversed between two controllers powered by the same transformer, a difference of 24Vac will occur between the grounds of each controller, which can result in:*

- *Partial or full loss of communication on the entire BACnet MS/TP link*
- *Improper function of the UC400 controller outputs*
- *Damage to the transformer or a blown transformer fuse*

Transformer Recommendations

A 24Vac power supply must be used for proper operation of the binary inputs, which requires 24Vac detection. In addition, the spare 24Vac outputs may be used to power relays and TRIACS.

- AC transformer requirements: *UL listed, Class 2 power transformer, 24Vac ±15%, device max load 24VA. The transformer must be sized to provide adequate power to the controller (12VA) and outputs (maximum 12VA per binary output).*
- CE-compliant installations: *The transformer must be CE marked and SELV compliant per IEC standards.*

Wiring Requirements

To ensure proper operation of the UC400 controller, install the power supply circuit in accordance with the following guidelines:

- A dedicated power circuit disconnect switch must be near the controller, easily accessible by the operator, and marked as the *disconnecting device* for the controller.
- 18 AWG (0.823 mm^2) copper wire is recommended for the circuit between the transformer and the controller.

Important: *The controller must receive AC power from a dedicated power circuit; failure to comply may cause the controller to malfunction.* DO NOT *run AC power wires in the same wire bundle with input/output wires; failure to comply may cause the controller to malfunction due to electrical noise.*

Connecting Wires

To connect the wires:

1. Disconnect power to the transformer.
2. Connect the 24Vac secondary wires from the transformer to the 24Vac and ⏚ terminals on the UC400 controller (refer to the illustration below).
3. Do one of the following to ensure the controller is adequately grounded:
   - Connect a grounding pigtail at some point along the secondary wire that runs between the controller ⏚ terminal and the transformer.
   - Ground one of the ⏚ terminals on the controller to the enclosure (if the enclosure is adequately grounded) or to an alternate earth ground.

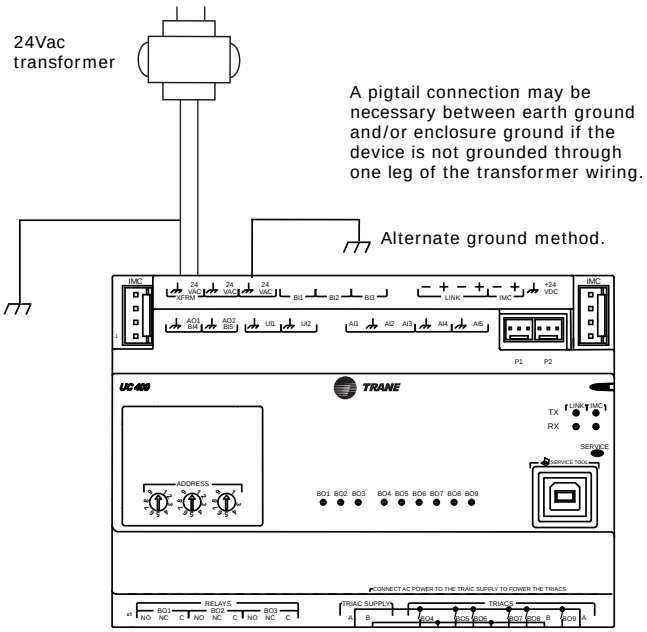

Power ON Check

To perform a **Power ON** check:

1. Verify that the 24Vac connector and the chassis ground are properly wired.
2. Remove the lockout/tagout from the line voltage power to the electrical cabinet.
3. Energize the transformer to apply power to the UC400 controller.
4. Observe the UC400 controller when power is applied to verify the power check sequence as follows:
   a. The power LED lights red for 1 second
   b. The power LED lights green
   - If the sequence above is completed as described, the controller is properly booted and ready for the application code.

If the power LED flashes red, a fault condition exists.

Wireless Sensors

Note: *Receivers ship installed on the unit. To remove the receiver, press in the retention tabs on the underside of the receiver enclosure (see Figure 32) and push upward.*

Note: *For more detailed information for wireless sensors, please see BAS-SVX04E-EN*

Figure 32. Retention tabs on underside of receiver enclosure

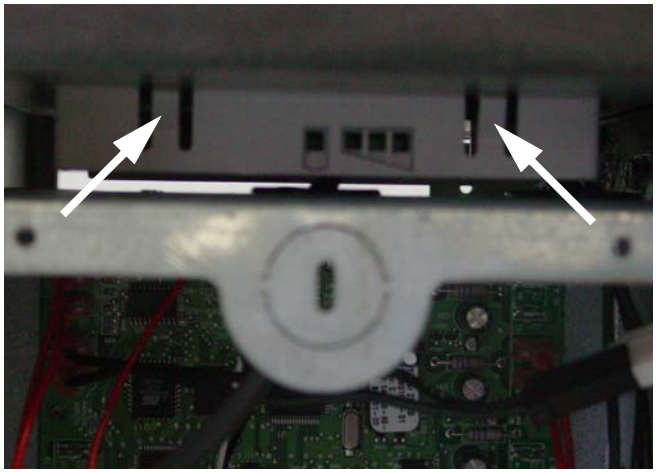

Address Setting

The process of establishing communication between a receiver and sensor is referred to as *association*. The following limitations apply:

- Each associated receiver/sensor set that communicates within the reception range of the wireless system must have a unique address.

It is not possible to associate more than one sensor to a receiver, nor is it possible to associate more than one receiver to a sensor.

To associate a receiver and sensor, the two devices must have their rotary address switches set to the same address.

Important: *Set the addresses before applying power to the receiver and before removing the insulation strip (Figure 33) from the sensor.*

To set the receiver and sensor addresses:

1. Using a small screwdriver, set the three rotary address switches (locations S1, S2, S3) on the receiver to an address between 001 and 999 (see Figure 33). You do not have to remove the covers to access the rotary address switches.

Note: *Do not use 000 as an address. An address of 000 returns the receiver outputs to their factory defaults (zone temperature and setpoint outputs: 72.5°F, removes all association knowledge, and prevents association with a sensor.*

Figure 33. Setting the rotary address switches on the receiver and the sensor

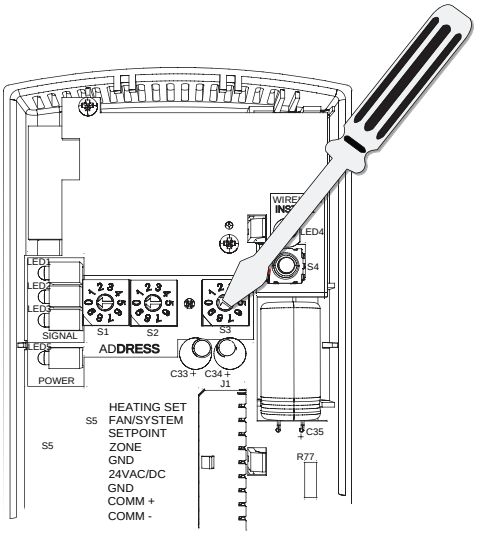

Receiver

Do not remove the insulation strip yet.

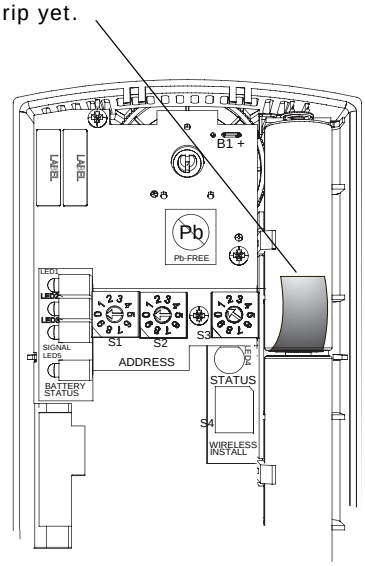

Sensor

2. Set the three rotary address switches (locations S1, S2, S3) on the sensor *to the same address as the receiver* (see Figure 33).

Note: *Do not use 000 as an address. An address of 000 removes all association knowledge, reverts the sensor to a low-power hibernation mode, and sends a disassociation request to the receiver.*

3. Record the address and location of the receiver and sensor pair.

Observing the Receiver for Readiness to Associate

After initial power up, the receiver conducts a channel scan for 20 seconds. During this time, the receiver selects from 16 available channels the clearest channel on which to operate. LED1, LED2, and LED3 flash rapidly in succession (round-robin style) while the channel scan is in progress, as shown in part 1 of the illustration.

Important: *Do not attempt association (leave the insulation strip in place) until the channel scan is finished.*

After the channel scan is finished, LED3 begins blinking (one-blink pattern) to show that the receiver is ready to be associated with a sensor (see part 2 of the following figure).

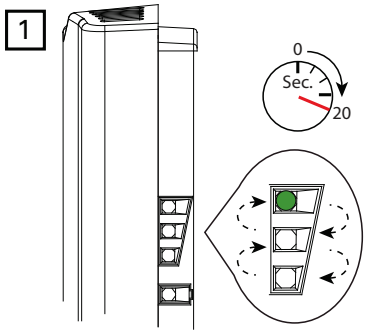

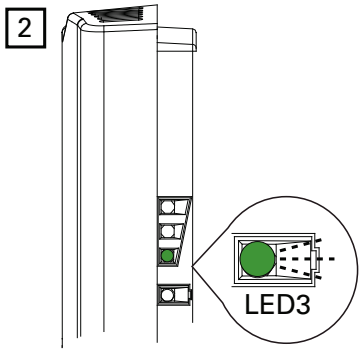

Associating the Sensor to the Receiver

To associate the sensor to the receiver:

1. Remove the sensor cover by firmly pressing the thumb tab at the bottom of the cover and pulling the cover away from the back plate.
2. Verify that the sensor is set to the same address as the receiver it is to be associated with.
3. Power the sensor by removing the insulation strip from between the two batteries.

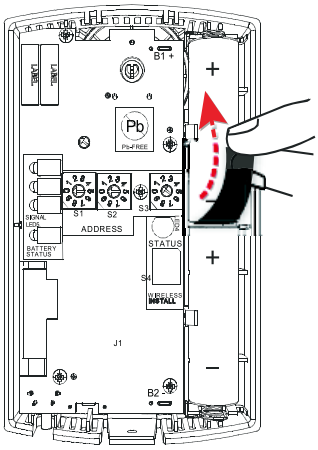

Association is automatically initiated between the sensor and the receiver. When LED3 on the receiver stops blinking, association has been established.

If the first association attempt is unsuccessful, the sensor automatically re-attempts association with the receiver every 10 minutes.

Note: *An associated sensor that has lost communication with the receiver will transmit an association request every 50 minutes. You can manually initiate association (see* *"Manual Association (Wireless Controls)," p. 120**).*

Testing Signal Strength and Battery Status

To verify that the association process was successful and that the batteries have adequate charge:

1. Firmly press and release the Test button on the bottom of the sensor (as illustrated below).
2. For model WZS, view LED1, LED2, and LED3 to determine the signal strength. View LED5 to determine the battery status (see the following figure for model WZS sensors).

   Note: *The LEDs will turn Off after 5 seconds to conserve battery strength.*

   For model WDS, determine the signal strength and battery status by viewing the symbols on the sensor display (see the following figure for model WDS sensors).
3. Record the results in your commissioning statement.

Note: *For more information, see* *"Testing Signal Strength (Wireless Controls)," p. 118* and *"Testing Battery Status (Wireless Controls)," p. 118*.

Model WZS sensor

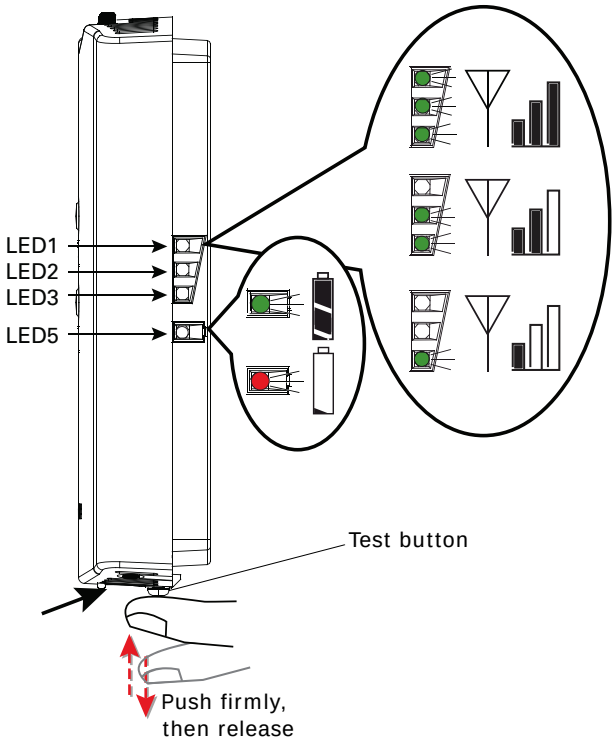

Model WDS sensor

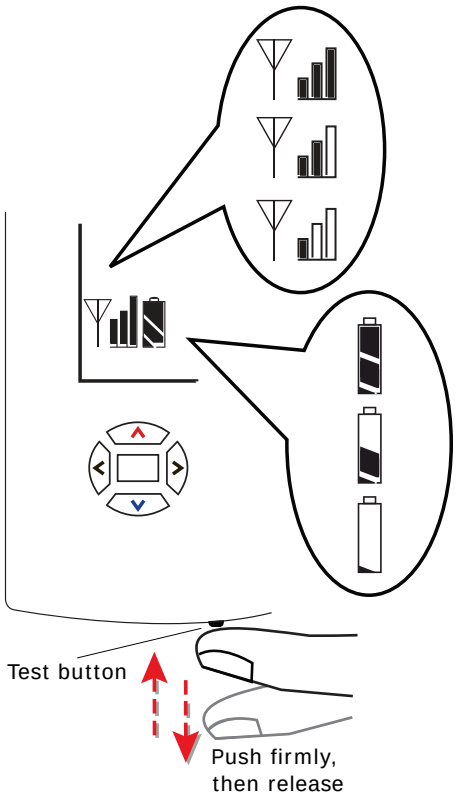

Configuring the Wireless Display Sensor (Model WDS only)

Note: *Sensors shipped with the fan-coil are pre-configured for three speeds.*

The configuration of the sensor determines which system features can be accessed and changes can be made by the tenant (for example, changes to cooling/heating mode, setpoint, or fan speed. Verify system and associated unit features before configuring the sensor.

The building owner or operator may choose to limit tenant access to certain features. This can be done through configuration. Or, if a sensor is configured to match all control capabilities of the building automation system, the locking feature can be used to restrict the tenant from making changes.

Configuration Procedure

To configure settings on the model WDS sensor, follow this procedure in the order presented.

1. Press the configuration button for 3 seconds.

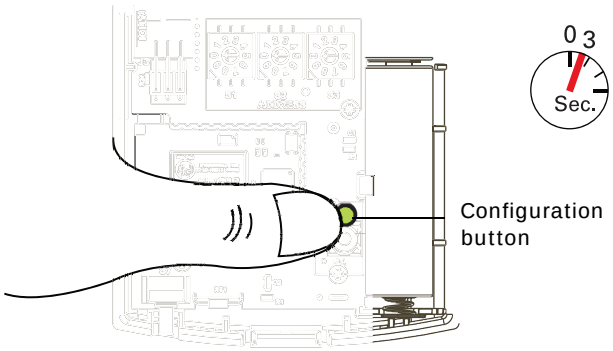

The display will change to configuration mode. When the sensor is in configuration mode, a wrench symbol appears on the display and the menus are separated by lines, as illustrated below.

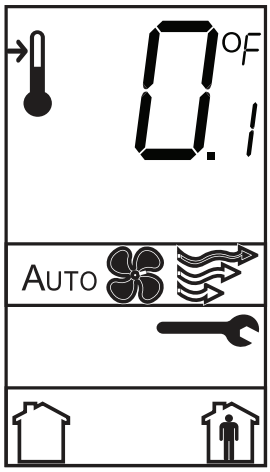

2. Press the center button on the keypad to begin the configuration process.

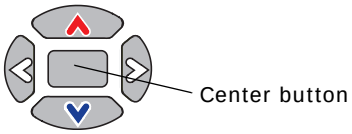

3. Configure the sensor options in the order shown in the table.
   - Press or to scroll to the next selection (as illustrated).
   - Press or to move to the next menu (as illustrated).

Setting	Configuration Options
Temperature • Choose Fahrenheit or Celsius • Choose the degree resolution (whole degrees, half degrees, or tenths of degrees).	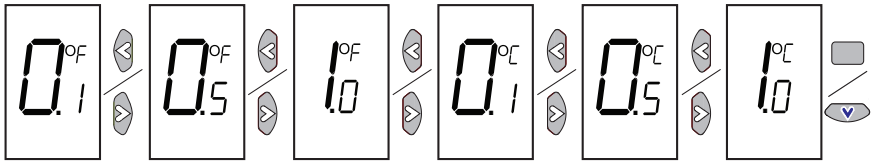
Setpoint	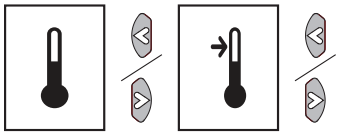 no setpoint single setpoint
System	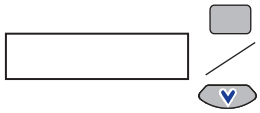 no system options enabled
Fan **Note:** Not all fan options are available for all systems.	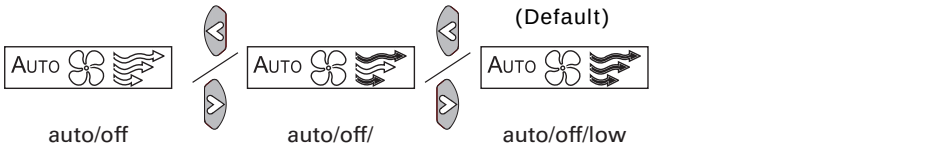 auto/off auto/off/ low/high (Default) auto/off/low med/high 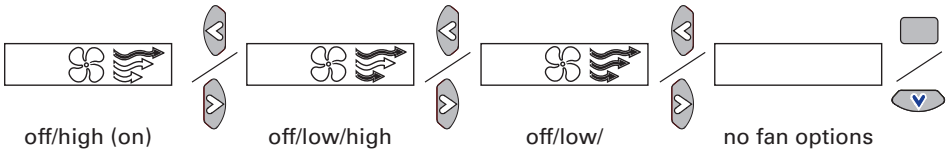 off/high (on) off/low/high off/low/ med/high no fan options enabled
Occupancy (timed override)	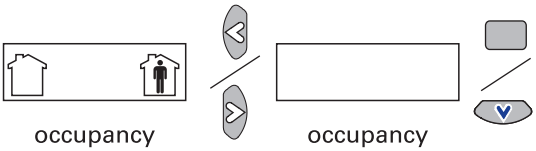 occupancy enabled occupancy disabled

4. Review the display to ensure that you have selected the correct configuration.
5. To return the display to operating mode, press the configuration button (see Step 1, p. 79).

Note: *The sensor will revert to operating mode if no buttons are pressed for 10 minutes.*

Optional Features

Displaying Setpoint or Temperature. You can configure the sensor to display either the temperature (default) or setpoint. To select either option:

1. Verify that the sensor is in operating mode and at the home screen.
2. Press the up and down arrows for 3 seconds. The arrow indicates setpoint display, as shown in the figure.

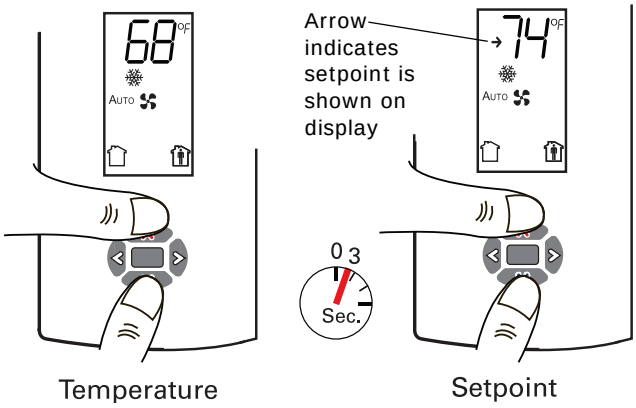

Locking or Unlocking Settings. You can lock or unlock the setpoint, system, or fan setting to prevent changes.

To lock or unlock a setting:

1. Verify that the sensor is in operating mode and at the home screen.
2. Choose a setting to lock or unlock:
   - Select the setpoint by pressing the up or down arrow.

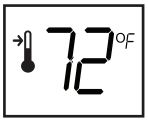

Setpoint

   - From the system menu press the down arrow to select the fan menu. Use the left or right arrow to choose the setting.

Fan menu

3. Press the left and right arrows for 4 seconds.

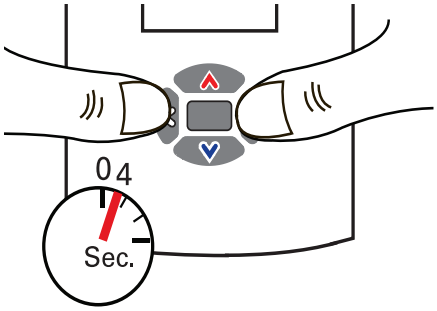

Note: *If you try to access a feature that is locked, the locked symbol will appear on the display. If you press a keypad button to try change a locked setting, the locked symbol will flash.*

Sensor Operations

Temporary Occupancy (Timed Override)

Temporary occupancy (timed override) is available on model WDS. Temporary occupancy is selected for after-business-hours adjustment of temperature setting, fan settings, or heat/cool settings, when the system has changed to unoccupied mode. System control will revert to unoccupied after a pre-determined time period.

Note: *Not all systems support the occupancy function.*

Model WDS Sensor

To request and cancel temporary occupancy on a model WDS sensor, see "Requesting Temporary Occupancy," p. 83.

End-of-Range Temperature Values

Receiver: The end-of-range temperature limits of the receiver for *all models* are 32°F to 122°F. The receiver cannot replicate temperature values outside this range. If the sensor transmits a temperature value to the receiver that is out of the receiver replication range, the receiver will "freeze" the output at the end-of-range values. This value will remain frozen until the transmitted temperature moves to between the end-of-range temperature limits.

Sensor: The end-of-range temperature setpoint limits for the *model WDS sensor* is 50°Fto 89.6°F.

Receiver Power-up Sequence

When power is applied to the receiver, one of the following sequences occurs. The sequence is dependent on the address setting and the association status of the receiver.

Address set to 000 and receiver is not associated with a sensor

- LED5 is constantly On, indicating power is applied and the receiver is functional.
- All models: Zone temperature and cooling setpoint default to 72.5°F.
  WDS only: The heating setpoint defaults to 70.5°F and the fan/system output will be 2230 Ω (see "Output Values—Failure and Default Modes of Operation (Wireless Controls)," p. 121).
- Status LED3 will display a 2-blink pattern diagnostic (Table 45, p. 118).

Address set from 001 to 999 and receiver is not associated with a sensor

- LED5 is constantly On, indicating power is applied and the receiver is functional.
- All models: Zone temperature and cooling setpoint default to 72.5°F.
  WDS only: The heating setpoint defaults to 70.5°F and the fan/system output will be 2230 Ω (see "Output Values—Failure and Default Modes of Operation (Wireless Controls)," p. 121).

- The receiver conducts an energy scan for 20 seconds to determine the clearest channel on which to operate.
- LED3 flashes On every 2 seconds when it is ready to accept a sensor association request. When an association request is made by a sensor, the receiver instructs the sensor on which power level to operate. Then the receiver and sensor begin operation at the appropriate channel and power level (see "Observing the Receiver for Readiness to Associate," p. 78).

Address set from 001 to 999 (and not changed since most recent power-up) and receiver is associated with a sensor

- LED5 is constantly On, indicating power is applied and the receiver is functional.
- Zone temperature and setpoint default to 72.5°F. WDS only: Heating setpoint defaults to 70.5°F, Fan = Auto, System = Off.
- The receiver waits for a broadcast transmission from its associated sensor. When a transmission is received, the receiver positions its zone temperature and setpoint outputs appropriately.
- If the receiver does not receive a communicated signal from its associated sensor within 35 minutes, zone temperature and setpoint outputs fail, generating a unit controller alarm (see "Output Values—Failure and Default Modes of Operation (Wireless Controls)," p. 121).

Note: *Once a receiver communicates to a WZS sensor, the receiver disables (opens) its zone setpoint output indefinitely.*

Sensor Transmission Time and Temperature Variables

Sensor transition time variables are as follows:

- The maximum time between sensor temperature transmissions is 15 minutes.
- The minimum time between sensor temperature transmissions is 30 seconds.
- The minimum time for transmitting temperature setpoint changes is 10 seconds.

Note: *If a sensor transmits a message to the receiver and the receiver does not reply, the sensor will retransmit the message to the receiver every 30 seconds until communication to the receiver is re-established.*

Sensor temperature time variables are as follows:

- The minimum change in zone temperature required to force a sensor transmission is:
  - 0.2°F when the temperature range is between 60°F and 80°F
  - 0.5°F when the temperature range is between 32°F and 60°F or between 80°F and 122°F
- The minimum change in temperature setpoint required to force a sensor transmission is:
  - 0.1°C for a model WDS sensor

Operating Mode (Model WDS)

This section describes how to operate the Trane wireless sensor, model WDS. Figure 34 shows an example of a model WDS that has been configured and is in operating mode.

Figure 34. Wireless sensor (model WDS) in operating mode

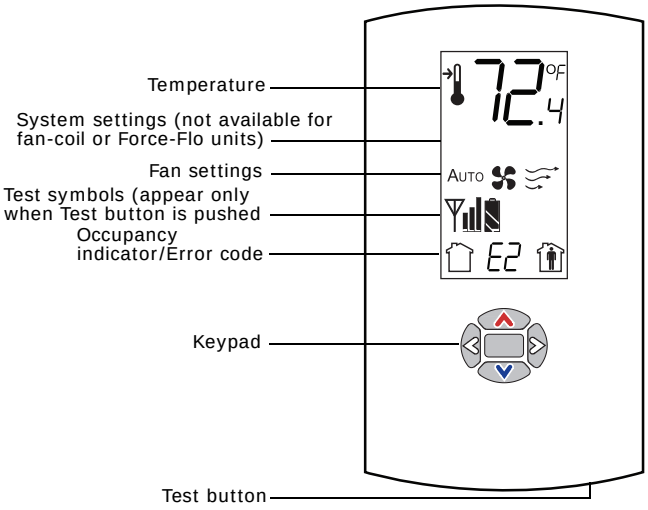

Changing Room Temperature

72.4 °F	This symbol shows the current room temperature, or your setpoint selection while you are making an adjustment.	1. To increase the room temperature, press ∧. To decrease the room temperature, press ∨. 2. To confirm, press ▭ or wait 5 seconds. The display will return to the home screen.
	When you select a setpoint, this symbol appears.	

Changing Heating and Cooling Room Temperature Settings (applies to some systems)

Changing the Fan Setting

Requesting Temporary Occupancy

Error Codes

Lock Symbol

Some systems allow you to select both heating and cooling room temperature settings. If your system has this option, this symbol appears when you adjust the temperature setting.	1. Press or to select the heating/cooling setting. 2. If in cooling mode, press to change to heating mode. If in heating mode, press to change to cooling mode. 3. Press or to select the heating/cooling setting. 4. To confirm, press or wait 5 seconds. The home screen will appear.
When you adjust the cooling setting, the top arrow and snowflake flash.	
When you adjust the heating setting, the bottom arrow and flame flash.	

AUTO Indicates that the fan will operate as needed to reach the selected temperature.	1. From the home screen, activate the fan setting menu by pressing and then . 2. Press or to choose the desired fan setting. 3. When the symbol for the desired setting appears, confirm your choice by • Pressing (the home screen will appear), or • Pressing or (the next menu will appear), or • Waiting five seconds.
Indicates that the fan setting is On. The number of arrows indicates fan speed (3: high, 2: medium, 1: low). The example shown indicates a fan on high speed. Not all systems offer all three speeds.	
Indicates that the fan setting is Off.	

Select to request occupancy Select to cancel occupancy	• If you need heating or cooling after normal business hours, you can "request" temporary occupancy by pressing and holding it for 2 seconds. The occupied symbol remains on the screen and the unoccupied symbol disappears. After 30 seconds, the unoccupied symbol will re-appear. • To cancel temporary occupancy, press and hold for 2 seconds. The unoccupied symbol will remain on the screen and the occupied symbol will disappear. After 30 seconds, the occupied symbol will re-appear.

E2 Indicates an error code	If an error code (E0–E7) is displayed, technical assistance may be required.

Indicates that a setting is locked	The lock symbol appears if you try to adjust a setting that cannot be changed.

Testing Signal Strength

Indicates excellent signal strength	Indicates satisfactory signal strength	Indicates poor signal strength

Press the Test button to display the signal strength symbols.

Testing Battery Status

Indicates full battery power	Indicates 50% of battery life left.	Indicates 25% of battery life left. Replace batteries. Flashing symbol indicates that approximately 14 days of operation remain.

Press the Test button to display the battery status symbols.

Use only UL-listed non-rechargeable 1.5 V lithium AA batteries (Trane p/n X13770035010 or equivalent).

Wireless Sensor Specifications

The following table presents specifications for all models of the wireless sensor sets.

Sensor operating temperature	32°F to 122°F
Receiver operating temperature	-40°F to 158°F
Storage temperature	-40°F to 185°F
Storage and operating humidity range	5% to 95%, non-condensing
Accuracy	0.5°F over a range of 55ºF to 85°F
Resolution	0.125°F over a range of 60°F to 80°F 0.25°F when outside this range
Setpoint functional range (WDS only)	50°F to 89.6°F
Receiver voltage	24 V nominal ac/dc ±10%
Receiver power consumption	<1 VA
Housing	Polycarbonate/ABS blend, UV protected, UL 94-5VA flammability rating, suitable for application in a plenum
Mounting	3.24 in (8.26 cm) for 2 mounting screws (supplied)
Sensor battery	(2) AA, 1.5 V, 2800 mAh, lithium, 5-year life, UL listed
Range[(a)]	Open range: 2,500 ft (762 m) (packet error rate = 2%) Usable: 200 ft (61 m) Typical: 75 ft (23 m)
Output power	100 mW
Radio frequency	2.4 GHz (IEEE Std 802.15.4-2003 compliant) (2405 to 2480 MHz, 5 MHz spacing)
Radio channels	16
Address range	000 to 999
Minimum time between transmissions	30 seconds
Maximum time between transmissions	15 minutes

(a) Range values are estimated transmission distances for satisfactory operation. Actual distance is job specific and must be determined during site evaluation.

The following table presents agency compliance information for wireless sensor set models as shown.

United States compliance (all models)	UL listed: UL 94-5VA Flammability rating UL 916: Energy management equipment
	FCC CFR47, Section 15.247 & Subpart E Digital Modulation Transmission with no SAR (FCC Identification TFP-13651127) This device complies with Part 15 of the FCC Rules. Operation is subject to the following two conditions: 1. This device may not cause harmful interference, and 2. This device must accept any interference received, including interference that may cause undesired operation. Warning: Changes or modifications not expressly approved by the party responsible for compliance could void the user's authority to operate the equipment. 20 cm separation distance: To comply with FCC's RF exposure limits for general population/uncontrolled exposure, the antenna(s) used for this transmitter must be installed to provide a separation distance of at least 20 cm from all persons and must not be co-located or operating in conjunction with any other antenna or transmitter.
Canada compliance (all models)	CSA22.2 No. 205-M1983 Signal Equipment
	Industry Canada (Certification no: IC: 6178A-13651127) Industry Canada statement: the term "IC" before the certification/registration number signifies only that the Industry Canada technical specifications were met. Section 14 of RSS-210: The installer of this radio equipment must ensure that the antenna is located or pointed such that it does not emit RF field in excess of Health Canada limits for the general population.
IEEE compliance for radio frequency range (all models)	IEEE 802.15.4-2003, IEEE Standard for Information Technology—Telecommunications and information exchange between systems—Local and metropolitan area networks—Specific requirements, Part 15.4: Wireless Medium Access Control (MAC) and Physical Layer (PHY) Specifications for Low Rate Wireless Personal Area Networks (LR-WPANs)

Pre-Start

Pre-Startup Checklist

Complete this checklist after installing the unit to verify all recommended installation procedures are complete before unit startup. This does not replace the detailed instructions in the appropriate sections of this manual. Disconnect electrical power before performing this checklist. Always read the entire section carefully to become familiar with the procedures.

⚠WARNING

Hazardous Voltage w/Capacitors!

Disconnect all electric power, including remote disconnects and discharge all motor start/run capacitors before servicing. Follow proper lockout/tagout procedures to ensure the power cannot be inadvertently energized. For variable frequency drives or other energy storing components provided by Trane or others, refer to the appropriate manufacturer's literature for allowable waiting periods for discharge of capacitors. Verify with an appropriate voltmeter that all capacitors have discharged. Failure to disconnect power and discharge capacitors before servicing could result in death or serious injury.

For additional information regarding the safe discharge of capacitors, see PROD-SVB06A-EN

Receiving

- ☐ Inspect unit and components for shipping damage. File damage claims immediately with the delivering carrier.
- ☐ Check unit for missing material. Look for ship-with options and sensors that may be packaged separately from the main unit (see "Receiving and Handling," p. 10).
- ☐ Check nameplate unit data so that it matches the sales order requirements.

Unit Location

1. Ensure the unit location is adequate for unit dimensions, ductwork, piping, and electrical connections.
2. Ensure access and maintenance clearances around the unit are adequate.

Unit Mounting

1. Ensure unit is installed level.

Component Overview

1. Ensure the fan rotates freely in the correct direction.
2. Ensure all unit access panels and air grilles are in place.
3. Verify that a clean air filter is in place.
4. Properly set the damper position to meet the fresh air requirement.

Unit Piping

1. Properly vent the hydronic coil to allow water flow through the unit.
2. Units with deluxe piping package: Tighten unions adequately.
3. Set water flow to the unit properly if unit piping has the circuit setter valve.
4. Check strainers (if supplied) for debris after apply system water.
5. Install the auxiliary drain pan and route the main drain pan hoses to the auxiliary drain pan on vertical fan-coil units.
6. Verify the condensate drain piping is complete for the unit drain pan.
7. Ensure the drain pan and condensate line are not obstructed. Remove any foreign matter that may have fallen into the drain pan during installation.

Electrical

- ☐ Check all electrical connections for tightness.

Note: *Some circumstances may require the unit to run before building construction is complete. These operating conditions may be beyond the design parameters of the unit and may adversely affect the unit.*

Startup

Tracer ZN510 and ZN520 Unit Startup

Refer to the Trane publication, CNT-IOP-1 (*ComfortLink 10 Controller: Installation, Operation and Programming Guide*) for Tracer ZN510 and CNT-SVX04A-EN for Tracer ZN520. The factory pre-programs the Tracer ZN510 and ZN520 with default values to control the temperature and unit airflow. Use Tracer Summit building automation system or Rover™ software to change the default values.

Follow the procedure below to operate the Tracer ZN510 or ZN520 in a stand-alone operation:

1. Turn power on at the disconnect switch option.
2. Position the fan mode switch to either high, medium, low, or the auto position.
3. Rotate the setpoint dial on the zone sensor module to 55°F for cooling or 85°F for heating.

The appropriate control valve will actuate assuming the following conditions:

1. Room temperature should be greater than 55°F and less than 85°F.
2. For a 2-pipe fan-coil unit with an automatic changeover sensor, the water temperature input is appropriate for the demand placed on the unit. For example, cooling operation is requested and cold water (5° lower than room temperature) flows into the unit.
3. Select the correct temperature setpoint.

Note: *Select and enable zone sensor temperature settings to prevent freeze damage to unit.*

Tracer UC400 Unit Startup

Refer to the Trane publication, *Installation, Operation, and Programming Guide for Factory or Field-installed Blower Coil and Fan Coil* (BAS-SVX48A-EN, or the most recent revision) for Tracer UC400 Fan Coil. The factory pre-programs the Tracer UC400 Fan Coil with default values to control the temperature and unit airflow. Use Tracer SC building automation system or Tracer TU™ software to change the default values.

Follow the procedure below to operate the Tracer UC400 in a stand-alone operation:

1. Turn power on at the disconnect switch option.
2. Position the fan mode switch to either high, medium, low, or the auto position.
3. Rotate the setpoint dial on the zone sensor module to 55°F for cooling or 85°F for heating.

The appropriate control valve will actuate assuming the following conditions:

1. Room temperature should be greater than 55°F and less than 85°F.
2. For a 2-pipe fan-coil unit with an automatic changeover sensor, the water temperature input is appropriate for the demand placed on the unit. For example, cooling operation is requested and cold water (5° lower than room temperature) flows into the unit.
3. Select the correct temperature setpoint.

Note: *Select and enable zone sensor temperature settings to prevent freeze damage to unit.*

General Information

Manual Fan Speed Switch

The manual fan mode switch is available with a four-position switch (off-hi-med-lo) allows manual fan mode selection and is available unit- or wall-mounted. See Figure 35.

Figure 35. Fan speed switch

The fan speed switch can be used to provide simultaneous fan speed customer requests in addition to external controller fan speed request. The wall-mounted option is low-voltage and has three 24-volt relays using a factory-wired transformer and relays to control the fan motor.

Tracer ZN010 and ZN510

Tracer ZN010 is a stand-alone device that controls fan-coils and cabinet heaters. Tracer ZN510 can be stand-alone or use peer-to-peer communications.

The controller is easily accessible in the control end panel for service. The control end panel is on the end of the unit opposite the piping. See Figure 36.

Figure 36. Tracer ZN010 board

Fan Mode Switch Operation

Off

Fan is turned off, two-position damper option spring-returns closed.

Hi, Med, Lo

Fan runs continuously at the selected speed. The two-position damper option opens to an adjustable mechanical stop position.

Tracer ZN010 & ZN510 Operation

Off

Fan is off; control valves and fresh air damper option close. Low air temperature detection option is still active.

Auto (Fan Cycling)

Fan and fresh air damper cycle with control valve option to maintain setpoint temperature. In cooling mode, the fan cycles from off to medium and in heating mode it cycles from off to low. When no heating or cooling is required, the fan is off and the fresh air damper option closes.

Low/Med/High (Continuous Fan)

Fan operates continuously while control valve option cycles to maintain setpoint temperature. Fresh air damper option is open.

Tracer ZN520 Operation

Off

Fan is off; control valve options and fresh air damper options close. The low air temperature detection option is still active.

Auto

Fan speed control in the auto setting allows the modulating (3-wire floating point) or 2–position control valve option and three-speed fan to work cooperatively to meet precise capacity requirement, while minimizing fan speed (motor/energy/acoustics) and valve position (pump energy, chilled water reset). As the capacity requirement increases at low fan speed, the water valve opens. When the low fan speed capacity switch point is reached, the fan switches to medium speed and the water valve repositions to maintain an equivalent capacity. The reverse sequence takes place with a decrease in required capacity.

Low/Med/High

The fan runs continuously at the selected speed and the valve option will cycle to meet setpoint.

UC400 Controller Operation

Off

Fan is off; control valve options and fresh air damper options close. The low air temperature detection option is still active.

Auto

Fan speed control in the auto setting allows the modulating (3-wire floating point) or 2-position control valve option and 1-, 2-, 3- or variable-speed fan to work cooperatively to meet precise capacity requirement, while minimizing fan speed (motor/energy/acoustics) and valve position (pump energy, chilled water reset). As the capacity requirement increases, the water valve opens. When the fan speed capacity switch points are reached, the fan speed ramps up and the water valve repositions to maintain an equivalent capacity. The reverse sequence takes place with a decrease in required capacity.

Low/Med/High

The fan runs continuously at the selected speed and the valve option will cycle to meet setpoint.

Sequence of Operation: Tracer ZN010 and ZN510

Note: *This section applies only to units with a Tracer ZN010 or ZN510 controller.*

Power-Up Sequence (Tracer ZN010 and ZN510)

When 24 Vac power is initially applied to the Tracer ZN010 or ZN510, the following sequence occurs:

1. All outputs are controlled off.
2. Tracer ZN010 and ZN510 reads all input values to determine initial values.
3. The random start time (0-25 seconds) expires.
4. Normal operation begins.

Entering Water Temperature Sampling Function (Tracer ZN010 and ZN510)

Both Tracer ZN010 and ZN510 use an entering water temperature sampling function to test for the correct water temperature for the unit operating mode. For all applications not involving changeover, the water temperature does not affect unit operation.

The entering water temperature sampling function opens the main hydronic valve, waits no more than three minutes to allow the water temperature to stabilize, then measures the entering water temperature to see if the correct water temperature is available.

The entering water must be five degrees or more above the space temperature to allow hydronic heating and five degrees or more below the space temperature to allow hydronic cooling.

If the correct water temperature is available, the unit begins normal heating or cooling operation. If the measured entering water temperature is too low or high, the controller closes the valve and waits 60 minutes before attempting to sample the entering water. Refer to Table 19.

Table 19. Unit mode as related to water temperature

Unit Type	EWT Sensor Required?	Coil Water Temperature
2-pipe changeover	Yes	COOLS if: Space temp - EWT ≥ 5°F HEATS if: EWT - space temp ≥ 5°F
4-pipe changeover	Yes	COOLS if: Space temp - EWT ≥ 5°F HEATS if: EWT - space temp ≥ 5°F
2-pipe heating only	No	Hot water assumed
2-pipe cooling only	No	Cold water assumed
4 pipe (2 pipe heat and 2 pipe cool)	No	Cold water assumed in main coil Hot water assumed in aux. coil

Binary Inputs (Tracer ZN010 and ZN510)

BIP1: Low Temperature Detection Option (Tracer ZN010 and ZN510)

The factory hard wires the low temperature detection sensor to binary input #1 (BIP1) on the Tracer ZN010 and ZN510. The sensor defaults normally closed (N.C.), and will trip off the unit on a low temperature diagnostic when detecting low temperature. In addition, the Tracer ZN010 and ZN510 control unit devices as listed below:

Fan: Off

Valves: Open

Electric heat: Off

Damper: Closed

Note: *See "Diagnostics," p. 112 for more information.*

BIP2: Condensate Overflow Detection Option (Tracer ZN010 and ZN510)

The factory hard wires the condensate overflow sensor to binary input #2 (BIP2) on the Tracer ZN010 and ZN510. The sensor defaults normally closed (N.C.), and will trip off the unit on a condensate overflow diagnostic if condensate reaches the trip point. In addition, the Tracer ZN010 and ZN510 control unit devices as listed below:

Fan: Off

Valves: Closed

Electric heat: Off

BIP3: Occupancy Sensor (Tracer ZN010 and ZN510)

Binary input #3 (BIP3) on Tracer ZN010 and ZN510 is available for field-wiring an occupancy sensor, such as a binary switch or a timeclock, to detect occupancy. The sensor can be either normally open or normally closed. Refer to Table 20.

Table 20. Occupancy sensor state table

Sensor Type	Sensor Position	Unit Occupancy Mode
Normally open	Open	Occupied
Normally open	Closed	Unoccupied
Normally closed	Open	Unoccupied
Normally closed	Closed	Occupied

Binary Outputs (Tracer ZN010 and ZN510)

Refer to Table 21 for the six binary outputs of Tracer ZN010 and ZN510.

Table 21. Binary outputs

Binary output	Description	Pin
BOP1	Fan high speed	J1-1
BOP2	Fan medium speed	J1-2
BOP3	Fan low speed	J1-4
BOP4	Main valve	J1-5
BOP5	Auxiliary valve/electric heat	J1-6
BOP6	2-position fresh air damper	J1-7

Notes:
1. In a four-pipe application, BOP4 is used for cooling and BOP5 is used for heating.
2. If no valves are ordered with the unit, the factory defaults for the Tracer ZN010 and ZN510 controller are:
   BOP4 configured as normally closed
   BOP5 configured as normally open
3. If the fresh air damper option is not ordered on the unit, BOP6 will be configured as none.

Both Tracer ZN010 and ZN510 accept a maximum of five analog inputs. Refer to Table 22, p. 90.

Table 22. Analog inputs

Analog Input	Description	Application
Zone	Space temperature	Space temperature detection / timed override detection
Set	Local setpoint	Thumbwheel setpoint
Fan	Fan mode input	Zone sensor fan switch
Analog input 1 (AI1)	Entering water temperature	Entering water temperature detection
Analog input 2 (AI2)	Discharge air temperature	Discharge air temperature detection

Notes:
1. 1.The zone sensor, entering water temperature sensor, and the discharge air temperature sensor are 10 KΩ thermistors. Figure 43, p. 117 provides the resistance-temperature curve for these thermistors.
2. Zone sensor:
   Wall-mounted sensors include a thermistor soldered to the sensor's circuit board
   Unit mounted sensors include a return air sensor in the unit's return air stream.
3. Changeover units include an entering water temperature sensor.

Zone Sensors (Tracer ZN010 and ZN510)

The zone sensors available with the Tracer ZN010 and ZN510 provide up to three different inputs

1. Space temperature measurement (10 KΩ thermistor)
2. Local setpoint
3. Fan mode switch

Wall-mounted zone sensors include a thermistor as a component of the internal printed circuit board. Unit mounted zone sensors use a sensor placed in the unit's return air stream.

Each zone sensor is equipped with a thumb wheel for setpoint adjustment.

Fan Mode Switch (Tracer ZN010 and ZN510)

The zone sensor may be equipped with a fan mode switch. The fan mode switch offers selections of off, low, medium, high, or auto.

Supply Fan Operation (Tracer ZN010 and ZN510)

Refer to Table 23 for fan mode operation. Tracer ZN010 and ZN510 will operate in either continuous fan or fan cycling mode. The fan cycles when the fan mode switch is placed in auto. The fan runs continuous when placed in the high, medium, or low position. Use Rover, Trane's installation and service tool, to change auto defaults.

Table 23. Fan mode operation

Heating Mode		Cooling Mode		
Fan mode	Occupied	Unoccupied	Occupied	Unoccupied
Off	Off	Off	Off	Off
Low	Low	Off/high[(a)]	Low	Off/high[(a)]
Medium	Medium	Off/high[(a)]	Medium	Off/high[(a)]
High	High	Off/high[(a)]	High	Off/high[(a)]
Auto				
Continuous	Heat default	Off/high[(a)]	Cool default	Off/high[(a)]
Cycling off/heat default		Off/high[(a)]	Off/cool default	Off/high[(a)]

Notes:

1. During the transition from off to any fan speed but high, Tracer ZN010 and ZN510 automatically starts the fan on high speed and runs for three seconds before transitioning to the selected speed (if it is other than high). This provides enough torque to start all fan motors from the off position.
2. When the heating output is controlled off, Tracer ZN010 and ZN510 automatically controls the fan on for an additional 30 seconds. This delay allows the fan to dissipate any residual heat from the heating source, such as electric heat.

(a) Whenever two states are listed for the fan:
The first state (off) applies when there is not a call for heating or cooling.
The second state (varies) applies when there is a call for heating or cooling.
The heat default is factory configured for low fan speed, and the cool default is medium.

Table 24. Valid operating range and factory default setpoints

Setpoint/parameter	Default Setting	Valid Operating Range
Unoccupied cooling setpoint	85°F	40°F to 115°F
Occupied cooling setpoint	74°F	40°F to 115°F
Occupied heating setpoint	71°F	40°F to 115°F
Unoccupied heating setpoint	60°F	40°F to 115°F
Cooling setpoint high limit	110°F	40°F to 115°F
Cooling setpoint low limit	40°F	40°F to 115°F
Heating setpoint high limit	105°F	40°F to 115°F
Heating setpoint low limit	40°F	40°F to 115°F
Power-up control wait	0 sec	0 sec to 240 sec

Tracer ZN520 Sequence of Operation

The Tracer ZN520 operates the fan in the following modes:

1. occupied
2. unoccupied
3. occupied standby
4. occupied bypass
5. Tracer Summit with supply fan control

Occupied (Tracer ZN520)

When the controller is in the occupied mode, the unit attempts to maintain the space temperature at the active occupied heating or cooling setpoint, based on the measured space temperature, the discharge air temperature, the active setpoint, and the proportional/integral control algorithm. The modulating control algorithm used when occupied or in occupied standby is described in the following sections. Additional information related to the handling of the controller setpoints can be found in the previous Setpoint operation section.

Unoccupied Mode (Tracer ZN520)

When the controller is in the unoccupied mode, the controller attempts to maintain the space temperature at the stored unoccupied heating or cooling setpoint, based on the measured space temperature, the active setpoint and the control algorithm, regardless of the presence of a hard-wired or communicated setpoint. Similar to other configuration properties of the controller, the locally stored unoccupied setpoints can be modified using Rover service tool.

In unoccupied mode, a simplified zone control algorithm is run. During the cooling mode, when the space temperature is above the cool setpoint, the primary cooling capacity operates at 100 percent. If more capacity is needed, the supplementary cooling capacity turns on (or opens to 100 percent). During the heating mode, when the space temperature is below the heat setpoint, the primary heating capacity turns on. All capacity is turned off when the space temperature is between the unoccupied cooling and heating setpoints. Note that primary heating or cooling capacity is defined by unit type and whether heating or cooling is enabled or disabled. For example, if the economizer is enabled and possible, it will be the primary cooling capacity. If hydronic heating is possible, it will be the primary heating capacity.

Occupied Standby Mode (Tracer ZN520)

The controller can be placed into the occupied standby mode when a communicated occupancy request is combined with the local (hard-wired) occupancy binary input signal. When the communicated occupancy request is unoccupied, the occupancy binary input (if present) does not affect the controller's occupancy. When the communicated occupancy request is occupied, the controller uses the local occupancy binary input to switch between the occupied and occupied standby modes.

During occupied standby mode, the controller's economizer damper position goes to the economizer standby minimum position. The economizer standby minimum position can be changed using Rover service tool.

In the occupied standby mode, the controller uses the occupied standby cooling and heating setpoints. Because the occupied standby setpoints typically cover a wider range than the occupied setpoints, the Tracer ZN520 controller reduces the demand for heating and cooling the space. Also, the outdoor air economizer damper uses the economizer standby minimum position to reduce the heating and cooling demands.

When no occupancy request is communicated, the occupancy binary input switches the controller's operating mode between occupied and unoccupied. When no communicated occupancy request exists, the unit cannot switch to occupied standby mode.

Occupied Bypass Mode (Tracer ZN520)

The controller can be placed in occupied bypass mode by either communicating an occupancy request of Bypass to the controller or by using the timed override On button on the Trane zone sensor.

When the controller is in unoccupied mode, you can press the On button on the zone sensor to place the controller into occupied bypass mode for the duration of the bypass time (typically 120 minutes).

Occupancy Sources (Tracer ZN520)

There are four ways to control the controller's occupancy:

- Communicated request (usually provided by the building automation system or peer device)
- By pressing the zone sensor's timed override On button
- Occupancy binary input
- Default operation of the controller (occupied mode)

A communicated request from a building automation system or another peer controller can change the controller's occupancy. However, if communication is lost, the controller reverts to the default operating mode (occupied) after 15 minutes (configurable, specified by the "receive heartbeat time"), if no local hard-wired occupancy signal exists.

A communicated request can be provided to control the occupancy of the controller. Typically, the occupancy of the controller is determined by using time-of-day scheduling of the building automation system. The result of the time-of-day schedule can then be communicated to the unit controller.

Tracer Summit with Supply Fan Control (Tracer ZN520)

If the unit is communicating with Tracer Summit and the supply fan control programming point is configured for Tracer (the factory configures as local), Tracer Summit will control the fan regardless of the fan mode switch position.

When the fan mode switch is set to Off or when power is restored to the unit, all Tracer ZN520 lockouts (latching diagnostics) are manually reset. The last diagnostic to occur is retained until the unit power is disconnected. Refer to Trane publication, CNT-SVX04A-EN (*Tracer ZN.520 Unit Controller: Installation, Operation and Programming Guide*) for specific instructions regarding the procedure for running the Tracer ZN520.

Cooling Operation (Tracer ZN520)

The heating and cooling setpoint high and low limits are always applied to the occupied and occupied standby setpoints. During the cooling mode, the Tracer ZN520 controller attempts to maintain the space temperature at the active cooling setpoint. Based on the controller's occupancy mode, the active cooling setpoint is one of the following:

- Occupied cooling setpoint
- Occupied standby cooling setpoint
- Unoccupied cooling setpoint

The controller uses the measured space temperature, the active cooling setpoint, and discharge air temperature along with the control algorithm to determine the requested cooling capacity of the unit (0 percent–100 percent). The outputs are controlled based on the unit configuration and the required cooling capacity. To maintain space temperature control, the Tracer ZN520 cooling outputs (modulating hydronic valve, two-position hydronic valve, or outdoor air economizer damper) are controlled based on the cooling capacity output.

The cooling output is controlled based on the cooling capacity. At 0 percent capacity, all cooling capacities are off and the damper is at minimum position. Between 0 percent and 100 percent capacity, the cooling outputs are controlled according to modulating valve logic (modulating valves) or cycled on (2-position valves). As the load increases, modulating outputs open further and binary outputs are energized longer. At 100 percent capacity, the cooling valve or damper is fully open (modulating valves) or on continuously (and 2-position valves).

Unit diagnostics can affect fan operation, causing occupied and occupied standby fan operation to be defined as abnormal. Refer to "Troubleshooting (Wireless Controls)," p. 117 for more information about abnormal fan operation.

The Tracer ZN520 controller operates the supply fan continuously when the controller is in the occupied and occupied standby modes, for either heating or cooling. The controller only cycles the fan off with heating and cooling capacity in the unoccupied mode.

The economizer is used for cooling purposes whenever the outdoor temperature is below the economizer enable setpoint and there is a need for cooling. The economizer is used first to meet the space demand, and other forms of cooling are used if the economizer cannot meet the demand alone. See modulating outdoor air damper operation for additional information.

Cascade cooling control initiates a discharge air tempering function if the discharge air temperature falls below the discharge air temperature control low limit, all cooling capacity is at minimum, and the discharge control loop determines a need to raise the discharge air temperature. The controller then provides heating capacity to raise the discharge air temperature to its low limit.

Discharge Air Tempering (Tracer ZN520)

The discharge air tempering function enables when cold outdoor air is brought in through the outdoor air damper, causing the discharge air to fall below the discharge air temperature control low limit. The controller exits the discharge air tempering function when heat capacity has been at 0 percent for five minutes.

Heating Operation (Tracer ZN520)

During heating mode, the Tracer ZN520 controller attempts to maintain the space temperature at the active heating setpoint. Based on the occupancy mode of the controller, the active heating setpoint is one of the following:

- Occupied heating
- Occupied standby heating
- Unoccupied heating

During dehumidification in the heating mode, the controller adjusts the heating setpoint up to the cooling setpoint. This reduces the relative humidity in the space with a minimum of energy usage.

The controller uses the measured space temperature, the active heating setpoint, and discharge air temperature, along with the control algorithm, to determine the requested heating capacity of the unit (0 percent–100 percent). The outputs are controlled based on the unit configuration and the required heating capacity.

Unit diagnostics can affect the Tracer ZN520 controller operation, causing unit operation to be defined as abnormal. Refer to the Troubleshooting section for more information about abnormal unit operation.

The heating output is controlled based on the heating capacity. At 0 percent capacity, the heating output is off continuously. Between 0 percent and 100 percent capacity, the heating output is controlled according to modulating valve logic (modulating valves) or cycled on (two-position valves). As the load increases, modulating outputs open further and binary outputs are energized

longer. At 100 percent capacity, the heating valve is fully open (modulating valves) or on continuously (two-position valves).

The Tracer ZN520 fan output(s) normally run continuously during the occupied and occupied standby modes, but cycle between high and off speeds with heating/cooling during the unoccupied mode. When in the occupied mode or occupied standby mode and the fan speed is set at the high, medium, or low position, the fan runs continuously at the selected speed. Refer to the Troubleshooting section for more information on abnormal fan operation.

When the unit's supply fan is set to auto, the controller's configuration determines the fan speed when in the occupied mode or occupied standby mode. The fan runs continuously at the configured heating fan speed or cooling fan speed. For all fan speed selections except off, the fan cycles off during unoccupied mode.

The economizer outdoor air damper is never used as a source of heating. Instead, the economizer damper (when present) is only used for ventilation; therefore, the damper is at the occupied minimum position in the occupied mode. The damper control is primarily associated with occupied fan operation.

Fan Mode Operation (Tracer ZN520)

For multiple fan speed applications, the Tracer ZN520 controller offers additional fan configuration flexibility. Separate default fan speeds for heating and cooling modes can be configured. The fan runs continuously for requested speeds (off, high, medium, or low). When the fan mode switch is in the Auto position or a hard-wired fan mode input does not exist, the fan operates at the default configured speed. See Table 25, p. 94 for default fan configuration for heat and cool mode. During unoccupied mode, the fan cycles between high speed and off with heating and cooling fan modes. If the requested speed is off, the fan always remains off.

Table 25. Fan configuration (Tracer ZN520)

	Auto Fan Operation	Fan Speed Default
Heating	Continuous	Off
		Low
		Medium
		High
Cooling	Continuous	Off
		Low
		Medium
		High

During dehumidification, when the fan is on Auto, the fan speed can switch depending on the error. Fan speed increases as the space temperature rises above the active cooling setpoint.

Additional flexibility built into the controller allows you to enable or disable the local fan switch input. The fan mode request can be either hard-wired or communicated to the controller. When both are present, the communicated request has priority over the hard-wired input. See Table 26, Table 27, and Table 28.

Table 26. Local fan switch enabled (Tracer ZN520)

Communicated Fan Speed Input	Fan Switch (Local)	Fan Operation
Off	Ignored	Off
Low	Ignored	Low
Medium	Ignored	Medium
High	Ignored	High
Auto	Off	
Low		
Medium		
High		
Auto	Off	
Low		
Medium		
High		
Auto (configured default, determined by heat/cool mode)		

Table 27. Fan operation in heating and cooling modes (Tracer ZN520)

	Heating		Cooling	
Fan Mode	Occ.	Unocc.	Occ.	Unocc.
Off	Off	Off	Off	Off
Low	Low	Off/high	Low	Off/high
Medium	Med	Off/high	Med	Off/high
High	High	Off/high	High	Off/high
Auto	Default fan sp.	Off/high	Default fan sp.	Off/high

Table 28. Local fan switch disabled or not present (Tracer ZN520)

Communicated Fan Speed Input	Fan Operation
Off	Off
Low	Low
Medium	Medium
High	High
Auto (or not present)	Auto (fan runs at the default speed)

Continuous Fan Operation (Tracer ZN520)

During occupied and occupied standby modes, the fan normally is on. For multiple speed fan applications, the fan normally operates at the selected or default speed (off, high, medium, or low). When fan mode is auto, the fan operates at the default fan speed.

During unoccupied mode, the controller controls the fan off. While unoccupied, the controller heats and cools to maintain the unoccupied heating and cooling setpoints. In unoccupied mode, the fan is controlled on high speed only with heating or cooling.

The unit fan is always off during occupied, occupied standby, and unoccupied modes when the unit is off due to a diagnostic or when the unit is in the off mode due to

the local zone sensor module, a communicated request, or the default fan speed (off).

If both a zone sensor module and communicated request exist, the communicated request has priority.

Fan Cycling Operation (Tracer ZN520)

Tracer ZN520 does not support fan cycling in occupied mode. The fan cycles between high speed and off in the unoccupied mode only. The controller's cascade control algorithm requires continuous fan operation in the occupied mode.

Fan Off Delay (Tracer ZN520)

When a heating output is controlled off, the Tracer ZN520 controller automatically holds the fan on for an additional 30 seconds. This 30-second delay gives the fan time to blow off any residual heat from the heating source, such as a steam coil. When the unit is heating, the fan off delay is normally applied to control the fan; otherwise, the fan off delay does not apply.

Fan Start on High Speed (Tracer ZN520)

On a transition from off to any other fan speed, the Tracer ZN520 controller automatically starts the fan on high speed and runs the fan at high speed for 0.5 seconds. This provides the ample torque required to start all fan motors from the off position.

Entering Water Temperature Sampling Function (Tracer ZN520)

Only units using the main hydronic coil for both heating and cooling (2-pipe changeover and 4-pipe changeover units) use the entering water temperature sampling function. Two-pipe changeover and 4-pipe changeover applications allow the main coil to be used for heating and for cooling; therefore, these applications require an entering water temperature sensor.

When three-way valves are ordered with a Tracer ZN520 control, the controller is factory-configured to disable the entering water temperature sampling function, and the entering water sensor is mounted in the proper location. Disabling entering water temperature sampling eliminates unnecessary water flow through the main coil when three-way valves are used.

The controller invokes entering water temperature sampling only when the measured entering water temperature is too cool to heat or too warm to cool. Entering water is cold enough to cool when it is five degrees below the measured space temperature. Entering water is warm enough to heat when it is five degrees above the measured space temperature.

When the controller invokes the entering water temperature sampling function, the unit opens the main hydronic valve for no more than three minutes before considering the measured entering water temperature. An initial stabilization period is allowed to flush the coil. This period is equal to 30 seconds plus half of the valve stroke time. Once this temperature stabilization period has expired, the controller compares the entering water temperature against the effective space temperature (either hard-wired or communicated) to determine whether the entering water can be used for the desired heating or cooling. If the water temperature is not usable for the desired mode, the controller continues to compare the entering water temperature against the effective space temperature for a maximum of three minutes.

The controller automatically disables the entering water temperature sampling and closes the main hydronic valve when the measured entering water exceeds the high entering water temperature limit (110°F). When the entering water temperature is warmer than 110°F, the controller assumes the entering water temperature is hot because it is unlikely the coil would drift to a high temperature unless the actual loop temperature was very high.

If the entering water temperature is unusable—too cool to heat or too warm to cool—the controller closes the hydronic valve and waits 60 minutes before initializing another sampling. If the controller determines the entering water temperature is valid for heating or cooling, it resumes normal heating/cooling control and effectively disables entering water temperature sampling until it is required.

Electric Heat Operation (Tracer ZN520)

The Tracer ZN520 controller supports one or two-stage electric heat operation for heating. To control the space temperature, electric heat is cycled to control the discharge air temperature. The rate of cycling is dependent upon the load in the space and the temperature of the incoming fresh air from the economizer (if any). Two-pipe changeover units with electric heat use the electric heat only when hot water is not available.

Manual Fresh Air Damper (Tracer ZN520)

Units with the manual fresh air damper option ship with the damper in the closed position, which is adjustable from zero to 100 percent in 25 percent increments. To adjust the position, first remove the air filter to expose the damper stop screw on the control panel end. Relocate the stop screw to the appropriate position. Then loosen the stop screw wingnut and adjust the linkage.

Economizer Damper Option (Tracer ZN520)

With a valid outdoor air temperature (either hard-wired or communicated), Tracer ZN520 uses the modulating economizer damper as the highest priority source of cooling. Economizer operation is only possible through the use of a modulating damper.

Economizing is possible during the occupied, occupied standby, unoccupied, and occupied bypass modes.

The controller initiates the economizer function if the outdoor air temperature is cold enough to be used as free cooling capacity. If the outdoor air temperature is less than

the economizer enable setpoint (absolute dry bulb), the controller modulates the outdoor air damper (between the active minimum damper position and 100 percent) to control the amount of outdoor air cooling capacity. When the outdoor air temperature rises 5°F above the economizer enable point, the controller disables economizing and moves the outdoor air damper back to its predetermined minimum position based on the current occupancy mode or communicated minimum damper position.

Table 29. Relationship between outdoor temperature sensors and damper position (Tracer ZN520)

Outdoor Air Temp.	Modulating Outdoor Air Damper		
	Occupied or Occupied Bypass	Occupied Standby	Unoccupied
None or invalid	Open to occupied minimum position	Open to occupied standby minimum position	Closed
Failed	Open to occupied minimum position	Open to occupied standby minimum position	Closed
Present and economizing feasible	Economizing minimum postion to 100%	Economizing between occupied standby minimum position to 100%	Open & economizing when unit is operating, closed
Present & economizing not feasible	Open to occupied minimum position	Open to occupied standby minimum position	Closed

Dehumidification (Tracer ZN520)

Dehumidification is possible when mechanical cooling is available, the heating capacity is located in the reheat position, and the space relative humidity setpoint is valid.The controller starts dehumidifying the space when the space humidity exceeds the humidity setpoint.

The controller continues to dehumidify until the sensed humidity falls below the setpoint minus the relative humidity offset.The controller uses the cooling and reheat capacities simultaneously to dehumidify the space. While dehumidifying, the discharge air temperature is controlled to maintain the space temperature at the current setpoint.

A typical scenario involves high humidity and high temperature load of the space.The controller sets the cooling capacity to 100 percent and uses the reheat capacity to warm the discharge air to maintain space temperature control. Dehumidification may be disabled via Tracer or configuration.

Note: *If the unit is in the unoccupied mode, the dehumidification routine will not operate.*

Data Sharing (Tracer ZN520)

Because this controller utilizes LonWorks® technology, the controller can send or receive data (setpoint, heat/cool mode, fan request, space temperature, etc.) to and from other controllers on the communication link, with or without the existence of a building automation system. This applies to applications where multiple unit controllers share a single space temperature sensor (for rooms with multiple units but only one zone sensor) for both standalone (with communication wiring between units) and building automation system applications. For this application you will need to use the Rover service tool. For more information on setup, refer to the Trane publication EMTX-SVX01G-EN, or the most recent version.

Binary Inputs (Tracer ZN520)

The Tracer ZN520 controller has four available binary inputs (see Table 30). Normally, these inputs are factory-configured for the following functions:

- Binary input 1: Low temperature detection (freezestat)
- Binary input 2: Condensate overflow
- Binary input 3: Occupancy/ Generic
- Binary input 4: Fan status

Note: *The generic binary input can be used with a Tracer Summit™ building automation system only.*

Each binary input default configuration (including normally open/closed) is set at the factory. However, you can configure each of the four binary inputs as normally open or normally closed. The controller will be set properly for each factory-supplied binary input end-device. When no device is connected to the input, configure the controller's input as not used.

Table 30. Binary input configurations (Tracer ZN520)

Binary Input	Description	Configuration	Controller Operation	
			Contact Closed	Contact Open
BI 1	Low temperature detection[a]	Normally closed	Normal	Diagnostic[b]
BI 2	Condensate overflow[a]	Normally closed	Normal	Diagnostic[b]
BI 3	Occupancy	Normally open	Unoccupied	Occupied
BI 3	Generic binary input	Normally open	Normal[c]	Normal[c]
BI 4	Fan status[a]	Normally open	Normal	Diagnostic[d]

Note: The occupancy binary input is for standalone unit controllers as an occupied/unoccupied input. However, when the controller receives a communicated occupied/unoccupied request, the communicated request has priority over the hard-wired input.

(a) During low temperature, condensate overflow, and fan status diagnostics, the Tracer ZN520 control disables all normal unit operation of the fan, valves, and damper.
(b) Table 31, p. 97 shows the controller's response to low temperature detection, condensate overflow, and fan status diagnostics.
(c) The generic binary input does not affect unit operation. A building automation system reads this input as a generic binary input.
(d) If the fan mode input is in the off position or the controller is in the unoccupied mode with the fan off, the fan status input will be open. A diagnostic will not be generated when the controller commands the fan off. A diagnostic will only be generated if the fan status input does not close after one minute from energizing a fan output or any time the input is open for one minute. The controller waits up to one minute after energizing a fan output to allow the differential pressure to build up across the fan.

Binary Outputs (Tracer ZN520)

Binary outputs are configured to support the following:

- Three fan stages (when one or two fan stages are present, medium fan speed can be configured as exhaust fan)
- One hydronic cooling stage
- One hydronic heating stage (dehumidification requires this to be in the reheat position)
- One DX cooling stage
- One or two-stage electric heat (dehumidification requires this to be in the reheat position)
- Face and bypass damper
- Modulating outdoor air damper
- One baseboard heat stage

For more information, see Table 31, p. 97.

Table 31. Binary output configuration (Tracer ZN520)

Binary Output	Configuration
J1-1	Fan high
J1-2	Fan medium
J1-3	Fan low
J1-4	(Key)
J1-5	Cool valve—open, or 2-position valve[(a)]
J1-6	Cool valve—close Note 1
J1-9	Heat valve—open, or 2 position valve, or 1st electric heat stage[(a)]
J1-10	Heat valve—close or 2nd Electric heat stage[(a)]
J1-11	Fresh air damper—open
J1-12	Fresh air damper—close
TB4-1	Generic/baseboard heat output
TB4-2	24 Vac

(a) For Tracer ZN520 units configured and applied as 2-pipe hydronic heat/cool changeover, terminals J1-5 and J1-6 are used to control the primary valve for both heating and cooling. For Tracer ZN520 units configured and applied as 2-pipe hydronic heat/cool changeover with electric heat, terminals J1-5 and J1-6 are used to control the primary valve (for both cooling and heating), and terminals J1-9 and J1-10 are used only for the electric heat stage. For those 2-pipe changeover units, electric heat will not be energized while the hydronic supply is hot (5° or more above the space temperature).

Table 32. Analog inputs (Tracer ZN520)

Description	Terminals	Function	Range
Zone	TB3-1	Space temperature input	5°F to 122°F
Ground	TB3-2	Analog ground	NA
Set	TB3-3	Setpoint input	40°F to 115°F
Fan	B3-4	Fan switch input	4821 to 4919 W (off)
			2297 to 2342 W (auto)
			10593 to 10807 W (low)
			13177 to 13443 W (medium)
			15137 to 16463 W (high)
Ground	TB3-6	Analog ground	NA
Analog input 1	J3-1	Entering water temperature	-40°F to 212°F
	J3-2	Analog ground	NA
Analog input 2	J3-3	Discharge air temperature	-40°F to 212°F
	J3-4	Analog ground	NA
Analog input 3	J3-5	Fresh air temp/generic temp	-40°F to 212°F
	J3-6	Analog ground	NA
Analog input 4	J3-7	Universal input	0% to 100%
		Generic 4–20mA	0% to 100%
		Humidity	0 to 2000 ppm
		CO_2	
	J3-8	Analog ground	NA
Ground	J3-9	Analog ground	NA

Notes:
1. The zone sensor, entering water temperature sensor, discharge air sensor, and the outside air temperature sensor are 10KΩ thermistors.
2. Zone sensor: Wall-mounted sensors include a thermistor soldered to the sensor's circuit board. Unit mounted sensors include a return air sensor in the units return air stream.
3. Changeover units include an entering water temperature sensor.

Zone Sensor (Tracer ZN520)

The Tracer ZN520 controller accepts the following zone sensor module inputs:

- Space temperature measurement (10kΩ thermistor)
- Local setpoint (either internal or external on the zone sensor module)
- Fan switch
- Timed override (On) and Cancel timed override
- Communication jack

Space Temperature Measurement (Tracer ZN520)

Trane zone sensors use a 10kΩ thermistor to measure the space temperature. Typically, zone sensors are wall-mounted in the room and include a space temperature thermistor. As an option, the zone sensor can be unit-mounted with a separate space temperature thermistor located in the unit's return air stream. If both a hard-wired and communicated space temperature value exist, the

controller ignores the hard-wired space temperature input and uses the communicated value.

External Setpoint Adjustment (Tracer ZN520)

Zone sensors with an external setpoint adjustment (1kΩ) provide the Tracer ZN520 controller with a local setpoint (50°F to 85°F or 10°C to 29.4°C). The external setpoint is exposed on the zone sensor's front cover.

When the hard-wired setpoint adjustment is used to determine the setpoints, all unit setpoints are calculated based on the hard-wired setpoint value, the configured setpoints, and the active mode of the controller. The hard-wired setpoint is used with the controller's occupancy mode (occupied, occupied standby, or unoccupied), the heating or cooling mode, the temperature deadband values, and the heating and cooling setpoints (high and low limits) to determine the controller's active setpoint.

When a building automation system or other controller communicates a setpoint to the controller, the controller ignores the hard-wired setpoint input and uses the communicated value. The exception is the unoccupied mode, when the controller always uses the stored default unoccupied setpoints. After the controller completes all setpoint calculations, based on the requested setpoint, the occupancy mode, the heating and cooling mode, and other factors, the calculated setpoint is validated against the following setpoint limits:

- Heating setpoint high limit
- Heating setpoint low limit
- Cooling setpoint high limit
- Cooling setpoint low limit

These setpoint limits only apply to the occupied and occupied standby heating and cooling setpoints. These setpoint limits do not apply to the unoccupied heating and cooling setpoints stored in the controller's configuration.

When the controller is in unoccupied mode, it always uses the stored unoccupied heating and cooling setpoints.The unit can also be configured to enable or disable the local (hard-wired) setpoint. This parameter provides additional flexibility to allow you to apply communicated, hard-wired, or default setpoints without making physical changes to the unit.

Similar to hard-wired setpoints, the effective setpoint value for a communicated setpoint is determined based on the stored default setpoints (which determines the occupied and occupied standby temperature deadbands) and the controller's occupancy mode.

Fan Switch (Tracer ZN520)

The zone sensor fan switch provides the controller with an occupied (and occupied standby) fan request signal (Off, Low, Medium, High, Auto). If the fan control request is communicated to the controller, the controller ignores the hard-wired fan switch input and uses the communicated value. The zone sensor fan switch input can be enabled or disabled through configuration using the Rover service tool. If the zone sensor switch is disabled, the controller resorts to its stored configuration default fan speeds for heating and cooling, unless the controller receives a communicated fan input.

When the fan switch is in the off position, the controller does not control any unit capacity. The unit remains powered and all outputs drive to the closed position. Upon a loss of signal on the fan speed input, the controller reports a diagnostic and reverts to using the default fan speed.

On/Cancel Buttons (Tracer ZN520)

Momentarily pressing the on button during unoccupied mode places the controller in occupied bypass mode for 120 minutes. You can adjust the number of minutes in the unit controller configuration using Rover service tool. The controller remains in occupied bypass mode until the override time expires or until you press the Cancel button.

Communication Jack (Tracer ZN520)

Use the RJ-11 communication as the connection point from Rover service tool to the communication link—when the communication jack is wired to the communication link at the controller. By accessing the communication jack via Rover, you can access any controller on the link.

Communications (Tracer ZN520)

Tracer ZN520 controller communicates via Trane's LonTalk protocol. Typically, a communication link is applied between unit controllers and a building automation system. Communication also is possible via Rover, Trane's service tool. Peer-to-peer communication across controllers is possible even when a building automation system is not present. You do not need to observe polarity for LonTalk communication links.

The controller provides six 0.25-inch quick-connect terminals for the LonTalk communication link connections, as follows:

- Two terminals for communication to the board
- Two terminals for communication from the board to the next unit (daisy chain)
- Two terminals for a connection from the zone sensor back to the controller

Table 33. Zone sensor wiring connections (Tracer ZN520)

TB1	Description
1	Space temperature / timed override detection
2	Common
3	Setpoint
4	Fan mode
5	Communications
6	Communications

UC400 Sequence of Operation

The UC400 controller will operate to maintain the space temperature setpoint. This section provides information about sequence of operations.

Power-up Sequence (UC400)

When 24Vac power is initially applied to the UC400 controller, the following sequence occurs:

1. The Power Marquee LED turns on as red, then flashes green, and then turns a solid green.
2. All outputs are controlled **OFF** and all modulating valves and dampers close.
3. The controller reads all input local values to determine initial values.
4. The random start timer begins (refer to the following section, "Random Start (UC400)").
5. The random start timer expires.
6. Normal operation begins, assuming there are no generated diagnostics. If any points are in fault or alarm mode, the Power Marquee LED flashes red.

Important: *Flashing red does not indicate that the UC400 controller will fail to operate. Instead, the point(s) that are in fault or alarm mode should be checked to determine if the status of the point(s) is acceptable to allow equipment operation.*

Random Start (UC400)

Random start is intended to prevent all units in a building from energizing at the same time. The random start timer delays the fan and any heating or cooling start-up from 5 to 30 seconds.

Occupancy Modes (UC400)

Occupancy modes can be controlled in the following ways:

- The state of the local (hard wired) occupancy binary input BI1.
- A timed override request from a Trane zone sensor (see "Timed Override Control (UC400)," p. 100).
- A communicated signal from either a Tracer SC or BAS.

A communicated request, from either a Tracer SC or BAS, takes precedence over local requests. If a communicated occupancy request has been established, and is no longer present, the controller reverts to the default (occupied) occupancy mode after 15 minutes (if no hard wired occupancy request exists). The UC400 controller has the following occupancy modes:

- Occupied
- Unoccupied
- Occupied standby
- Occupied bypass

Occupied Mode (UC400)

In Occupied Mode, the UC400 controller maintains the space temperature based on the occupied space temperature setpoint ± occupied offset. The controller uses the occupied mode as a default mode when other forms of occupancy request are not present and the fan runs continuously. The outdoor air damper, if present, will close when the fan is OFF. The temperature setpoints can be local (hard wired), communicated, or stored default values (configurable using the Tracer TU service tool).

Unoccupied Mode (UC400)

In unoccupied mode, the UC400 controller attempts to maintain the space temperature based on the unoccupied heating or cooling setpoint. The fan will cycle between high speed and **OFF**. In addition, the outdoor air damper remains closed, unless economizing. The controller always uses the stored default setpoint values (configurable using the Tracer TU service tool), regardless of the presence of a hard wired or communicated setpoint value.

Occupied Standby Mode (UC400)

The UC400 controller is placed in occupied standby mode *only* when a communicated occupied request is combined with an unoccupied request from occupancy binary input BI1. In occupied standby mode, the controller maintains the space temperature based on the occupied standby heating or cooling setpoints. Because the occupied standby setpoints have a typical temperature spread of 2°F (1.1°C) in either direction, and the outdoor air damper is closed, occupied standby mode reduces the demand for heating and cooling the space. The fan will run as configured (continuously) for occupied mode. The controller always uses the stored default setpoint values (configurable using the Tracer TU service tool), regardless of hard wired or communicated setpoint values. In addition, the outdoor air damper uses the economizer occupied standby minimum position setpoint to reduce the ventilation rate.

Occupied Bypass Mode (UC400)

The UC400 controller is placed in occupied bypass mode when the controller is operating in the unoccupied mode and when either the timed override **ON** button on the Trane zone sensor is pressed or the controller receives a communicated occupied bypass signal from a BAS. In occupied bypass mode, the controller maintains the space temperature based on the occupied heating or cooling setpoints. The fan will run as configured (continuous or cycling). The outdoor air damper closes when the fan is **OFF**. The controller remains in occupied bypass mode until either the **CANCEL** button is pressed on the Trane zone sensor or the occupied bypass time (configurable using the Tracer TU service tool) expires. The temperature setpoints can configured as local (hard wired), communicated, or stored default values using the Tracer TU service tool.

Timed Override Control (UC400)

If the UC400 controller has a timed override option (**ON/CANCEL** buttons), pushing the **ON** button initiates a timed override on request. A timed override on request changes the occupancy mode from unoccupied mode to occupied bypass mode. In occupied bypass mode, the controller controls the space temperature based on the occupied heating or cooling setpoints. The occupied bypass time, which resides in the UC400 controller and defines the duration of the override, is configurable from 0 to 240 minutes (default value of 120 minutes). When the occupied bypass time expires, the unit transitions from occupied bypass mode to unoccupied mode. Pushing the **CANCEL** button cancels the timed override request. In addition, it will end the timed override before the occupied bypass time has expired and transition the unit from occupied bypass mode to unoccupied mode.

If the controller is in any mode other than unoccupied mode when the **ON** button is pressed, the controller still starts the occupied bypass timer without changing to occupied bypass mode. If the controller is placed in unoccupied mode before the occupied bypass timer expires, the controller is placed into occupied bypass mode and remains in this mode until either the **CANCEL** button is pressed on the Trane zone sensor or the occupied bypass time expires.

Zone Temperature Control (UC400)

The UC400 controller has three methods of zone temperature control:

- **Cascade zone control**—used in the occupied, occupied bypass, and occupied standby modes. It maintains zone temperature by controlling the discharge air temperature to control the zone temperature. The controller uses the difference between the measured zone temperature and the active zone temperature setpoint to produce a discharge air temperature setpoint. The controller compares the discharge air temperature setpoint with the discharge air temperature and calculates a unit heating/cooling capacity accordingly (refer to the illustration below). The end devices (outdoor air damper, valves, and so on) operate in sequence based on the unit heating/cooling capacity (0–100 percent).

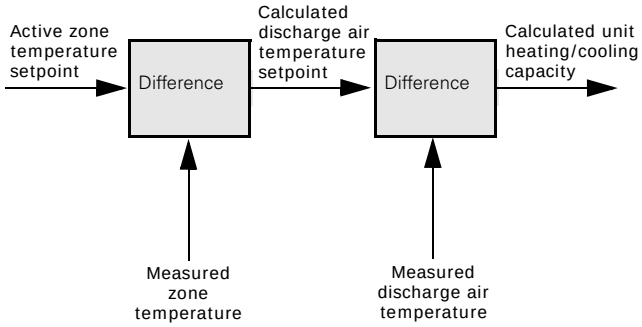

If the discharge air temperature falls below the discharge air temperature low limit setpoint, (configurable using the Tracer TU service tool), and the cooling capacity is at a minimum, the available heating capacity is used to raise the discharge air temperature to the low limit (refer to the following section, "Discharge Air Tempering (UC400).").

- **Simplified zone control**— if discharge air temperature failure occurs, then simplified zone controls runs. In the unoccupied mode, the controller maintains the zone temperature by calculating the required heating or cooling capacity (0–100%) according to the measured zone temperature and the active zone temperature setpoint. The active zone temperature setpoint is determined by the current operating modes, which include occupancy and heat/cool modes.
- **Discharge air temperature control**— is the backup mode that runs *only* if there is not valid zone temperature. In this mode, the active space temperature setpoint is used as the discharge air temperature setpoint.

  Important: *This is not a normal operating mode. The source of the invalid zone temperature needs to be corrected to restore normal operation.*

Discharge Air Tempering (UC400)

If the UC400 controller is in cooling mode, cascade zone control initiates a discharge air tempering function when:

- The discharge air temperature falls below the discharge air temperature low limit setpoint (configurable using the Tracer TU service tool)
- All cooling capacity is at a minimum. The discharge air tempering function allows the controller to provide heating capacity (if available) to raise the discharge air temperature to the discharge air temperature low limit setpoint.
- The cold outdoor air is brought in through the outdoor air damper and when the damper is at (high) minimum position. This causes the discharge air temperature to fall below the discharge air temperature low limit setpoint.

Heating or Cooling Mode (UC400)

The heating or cooling mode can be determined in one of two ways:

- By a communicated signal from a BAS or a peer controller
- Automatically, as determined by the UC400 controller

A communicated heating signal permits the controller to *only* heat and a communicated cooling signal permits the controller to *only* cool. A communicated auto signal allows the controller to automatically change from heating to cooling and vice versa.

In heating or cooling mode, the controller maintains the zone temperature based on the active heating setpoint and the active cooling setpoint, respectively. The active heating and cooling setpoints are determined by the occupancy mode of the controller.

For 2-pipe and 4-pipe changeover units, normal heat/cool operation *will not* begin until the ability to conduct the desired heating or cooling operation is verified. This is done using the entering water temperature sampling function, for which a valid entering water temperature is required. When neither a hard wired nor a communicated entering water temperature value is present on changeover units, the controller operates in *only* heating mode and assumes the coil water is hot. The sampling function is not used.

The entering water temperature sampling function is used *only* for changeover applications and for information and troubleshooting. It *does not* affect the operation of the controller. (For more information, refer to the following section, "Entering Water Temperature Sampling Function (UC400)".)

Entering Water Temperature Sampling Function (UC400)

The entering water temperature sampling function is used with 2-pipe and 4-pipe changeover units and requires a valid entering water temperature value. If the entering water temperature value is less than 5°F (2.8°C) above a valid zone temperature value for hydronic heating, and greater than 5°F (2.8°C) below a valid zone temperature value for hydronic cooling, the sampling function is enabled. When the sampling function is enabled, the UC400 controller opens the main hydronic valve to allow the water temperature to stabilize. After 3 minutes, the controller again compares the entering water temperature value to the zone temperature value to determine if the desired heating or cooling function can be accomplished. If the entering water temperature value remains out of range to accomplish the desired heating/cooling function, the controller closes the main hydronic valve and waits 60 minutes to attempt another sampling. If the entering water temperature value falls within the required range, it resumes normal heating/cooling operation and disables the sampling function.

Fan Operation (UC400)

The UC400 controller supports 1-, 2-, 3-speed fans and variable-speed fans. The fan always operates continuously while either heating or cooling during occupied, occupied standby, and occupied bypass operation. During unoccupied operation, the fan cycles between **OFF** and **HIGH**, regardless of the fan configuration. When running in **AUTO** mode, the fan operates differently based on the mode and the type of fan.

For 1-, 2-, and 3-speed fans, each time the fan is enabled, the fan begins operation and runs on high speed for a period of time (0.5 seconds for fan coils and 3 seconds for unit ventilators and blower coils) before changing to another speed. Initially running on high speed provides adequate torque to start the fan motor from the **OFF** position.

Note: *In occupied mode, the UC400 controller requires continuous fan operation because of cascade zone control. In unoccupied mode, the fan cycles.*

Manual Fan Speed Control (UC400)

Regardless of the fan type, the fan runs continuously at the desired fan speed during occupied, occupied standby, and occupied bypass operation as follows:

- When the controller receives a communicated fan speed signal (**HIGH**, **MEDIUM**, **LOW**)
- The associated fan speed switch is set to a specific fan speed
- The Supply Fan Speed Request point is overridden

During unoccupied operation, the fan cycles between **OFF** and **HIGH**, regardless of the communicated fan speed signal or fan speed switch setting (unless either of these is **OFF**, which in turn, will control the fan **OFF**).

The fan turns OFF when:

- The controller receives a communicated **OFF** signal
- The fan speed switch is set to **OFF**
- Specific diagnostics are generated
- The default fan speed is set to **OFF** and the fan is operating in the **AUTO** mode

Note: *The supply fan speed source can be configured for BAS, local, or default value control using the Tracer TU service tool.*

AUTO Fan Operation; 1-, 2-, 3-speed Fans (UC400)

When the controller receives a communicated auto signal (or the associated fan speed switch is set to **AUTO** with no communicated value present), the fan operates in the **AUTO** mode. In **AUTO** mode, the fan operates according to the fan default (configurable using the Tracer TU service tool). The fan speed has multiple speed configurations (default is **AUTO**) or set to **OFF** for both heating and cooling operation. When configured as **AUTO** (and with multiple speeds available), the fan changes based on the required capacity calculated by the control algorithm.

AUTO Fan Operation; ECM Energy Efficient Mode (UC400)

When the controller is configured for *Energy Efficient Mode,* by means of the *Fan Operating Mode Request MV* point, the controller and daughter board will minimize energy use by running the fan at the lowest possible speed while maintaining space temperature. The controller will fully utilize valves, economizer, or electric heat which increases fan speed to meet space temperature (unless the fan has been manually controlled. Refer to the preceding

section, "Manual Fan Speed Control (UC400)").

AUTO Fan Operation; ECM Acoustical Mode (UC400)

When the controller is configured for *Acoustical Mode*, by means of the *Fan Operating Mode Request MV* point, the controller and daughter board will minimize acoustical nuisance by balancing changes in fan speed and total fan noise. The controller will fully **OPEN** cooling and heating valves before increasing fan speed to meet space temperature (unless the fan has been manually controlled. Refer to the preceding section, "Manual Fan Speed Control (UC400)"). If multiple stages of electric heat exist the controller will use a single minimum air flow for each stage.

Exhaust Control (UC400)

Exhaust control is achieved by a single-speed exhaust fan and controlled by binary output 2 (BO2). Exhaust control, if not present, can be enabled by selecting **Yes** under the *Exhaust Fan Selection* on the Tracer TU Configuration page under the *Equipment Options* group.

Note: *Exhaust fan configuration cannot be selected with 3-speed fan operation.*

Important: *If exhaust control is added to an existing configuration, all other configuration options should be verified to match the correct equipment options.Temperature and flow setpoints will revert to default values.*

The exhaust function is coordinated with the supply fan and outdoor/return air dampers as follows:

- The exhaust fan energizes when the fan is running and when the outdoor air damper position is greater than or equal to the exhaust fan enable position (or the outside air damper position at which the exhaust fan turns **ON**).
- The exhaust fan turns **OFF** when the fan either turns **OFF** or the outdoor air damper closes to 10 percent below the exhaust fan enable position.
- If the exhaust fan/damper enable setpoint is less than 10 percent, the exhaust output is energized if the outdoor air damper position is at the setpoint and de-energized at 0.

Valve Operation (UC400)

The UC400 controller supports one or two modulating or two-position valves, depending on the application (refer Table 34, p. 103). The controller opens and closes the appropriate valve(s) to maintain the active zone temperature setpoint at the heating setpoint in heating mode or the cooling setpoint in cooling mode (refer to "Cascade Zone Control," p. 100).

Modulating Valve Operation (UC400)

The UC400 controller supports tri-state modulating valve control. Two binary outputs control each valve: one to drive the valve open and one to drive the valve closed. The stroke time for each valve is configurable using the Tracer TU service tool. The controller supports the following:

- Heating
- Cooling
- Heat/cool changeover with a single valve and coil for 2-pipe applications
- Cooling or heat, cool changeover with the main valve, and coil
- Only heating with the auxiliary valve and coil for 4-pipe applications

The controller moves the modulating valve to the desired positions based on heating or cooling requirements.

Modulating Valve Calibration (UC400)

Modulating valve calibration is automatic. During normal controller operation, the UC400 overdrives the actuator (135 percent of the stroke time) whenever there is a request for a position of 0 percent or 100 percent. At either power-up, after a power outage, or when the occupancy status changes to unoccupied, the controller first drives all modulating valves (and dampers) to the closed position. The controller calibrates to the fully **CLOSED** position by over driving the actuator (135 percent of the stroke time). Thereafter, the controller resumes normal operation.

Two-position Valve Operation (UC400)

The UC400 controller supports two-position valves with a single binary output for each valve. Controllers used for 2-pipe applications support heating, cooling, or heat/cool changeover with a single valve/coil. A controller used for 4-pipe applications supports cooling or heat/cool changeover with a main valve/coil and heating *only* with an auxiliary valve/coil.

Modulating Outdoor/Return Air Damper (UC400)

The UC400 controller operates the modulating outdoor/return air dampers based on the following:

- Occupancy mode
- Outdoor air temperature (communicated or hard wired sensor)
- Zone temperature
- Setpoint
- Discharge air temperature
- Discharge air temperature setpoint

The minimum position for an outdoor air damper is configurable using the Tracer TU service tool for both occupied mode and occupied standby mode and for low-

speed fan operation. A controller can receive a BAS-communicated outdoor air damper minimum position.

A BAS-communicated minimum position setpoint has priority over all locally configured setpoints. When a communicated minimum position setpoint is not present, the controller uses the configured minimum position for low fan speed whenever the fan is running at low speed, regardless of the occupancy state. Refer to Table 34 and Table 35 for more information about how the controller determines the position of the modulating outdoor air damper.

Table 34. Modulating outdoor air damper position setpoint determination (UC400)

Occupancy	BAS-communicated Setpoint	Fan speed	Active Minimum Setpoint
Unoccupied	Any value	Any value	0% (closed).
• Occupied • Occupied bypass • Occupied standby	Valid	Any value	BAS-communicated.
• Occupied • Occupied bypass • Occupied standby	Invalid	Low	Occupied low fan minimum.
• Occupied • Occupied bypass	Invalid	Medium/ high	Occupied minimum.
Occupied standby	Invalid	Medium/ high	Occupied standby minimum.

Table 35. Relationship between outdoor temperature sensors and damper position (UC400)

	Modulating outdoor air damper position		
Outdoor Air Temperature	**Occupied or Occupied Bypass**	**Occupied Standby**	**Unoccupied**
No or invalid outdoor air temperature.	Open to occupied minimum position.	Open to occupied standby minimum position.	Closed.
Failed outdoor air sensor.	Open to occupied minimum position.	Open to occupied standby minimum position.	Closed.
Outdoor air temperature present and economizing possible (Refer to section, "Economizing (Free Cooling) (UC400)," p. 103).	Economizing; damper controlled between occupied minimum position and 100%.	Economizing; damper controlled between occupied standby minimum position and 100%.	Open and economizing during unit operation; otherwise closed.
Outdoor air temperature present and economizing not possible (Refer to section, "Economizing (Free Cooling) (UC400)," p. 103).	Open to occupied minimum position.	Open to occupied standby minimum position.	Closed.

Economizing (Free Cooling) (UC400)

Cooling with outdoor air (during the times when the temperature is low enough to allow) is referred to as economizing (free cooling). The UC400 controller and applications with modulating outside air damper, support economizing. The modulating outdoor air damper provides the first source of cooling for the controller.

The controller initiates economizing if the outdoor air temperature is below the economizer enable point (configurable using the Tracer TU service tool). If economizing is initiated, the controller modulates the outdoor air damper (between the active minimum damper position and 100 percent) to control the amount of outdoor air cooling capacity. When the outdoor air temperature rises 5°F (2.8°C) above the economizer enable point, the controller disables economizing and moves the outdoor air damper back to its predetermined minimum position, based on the current occupancy mode or communicated minimum outdoor air damper position. If an outdoor air temperature value is not present, economizing is disabled.

Two-position Control Of A Modulating Outdoor Air Damper (UC400)

The UC400 controller supports two-position outdoor air damper actuators. However, a modulating outdoor/return air damper actuator can be used for two-position control. Two-position control can be achieved by not providing an outdoor air temperature (neither hard wired nor communicated) to the controller, and by setting the damper minimum position (using the Tracer TU service tool) to the desired value, typically 100 percent.

Electric Heat Operation (UC400)

The UC400 controller supports both SCR (modulating) and staged electric heat (1- or 2-stages). SCR heat is *only* a field-installed option. In a unit configured with staged electric heat, the electric heating circuit(s) are cycled **ON** and **OFF** appropriately to maintain the desired space temperature at the active heating setpoint. In a unit configured with SCR (modulating) electric heat, the UC400 will send a 0 to 10 Volt DC signal to adjust SCR capacity in order to maintain the desired space temperature.

In both staged and modulating electric heat applications, the simultaneous use of electric and hydronic heat is not supported and the UC400 will operate electric heat *only* when hot water *is not* available (for example, in a changeover unit). In addition, the UC400 will run the supply fan for 30 seconds after electric heat is turned **OFF** in order to dissipate heat from the unit

Note: *This delay* does not *apply to steam or hydronic heating.*

Factory-configured electric heat units have built-in mechanical protections to prevent dangerously high discharge air temperatures.

Dehumidification Operation (UC400)

The UC400 controller supports space dehumidification when:

- Mechanical (DX or hydronic) cooling is available

- The heating capacity is located in the reheat position
- The space relative humidity is valid

The space relative humidity can be a BAS-communicated value or come directly from a wired relative humidity sensor. The controller begins to dehumidify the space when the space humidity exceeds the humidity setpoint. The controller continues to dehumidify until the sensed humidity falls below the setpoint minus the relative humidity offset.

Peer-to-peer Communication (UC400)

Peer-to-peer communication is accomplished by means of custom TGP2 programming in the Tracer SC system controller or via hard wiring *only* between controllers.

Unit Protection Strategies (UC400)

The following unit protection strategies are initiated when specific conditions exist in order to protect the unit or building from damage:

- Smart reset
- Low coil temperature protection
- Condensate overflow
- Fan status
- Fan off delay
- Filter maintenance timer
- Freeze avoidance
- Freeze protection (discharge air temperature low limit)

Smart Reset (UC400)

The UC400 controller will automatically restart a unit that is locked out as a result of a **Low Coil Temp Detection** (BI3) diagnostic. Referred to as *smart reset*, this automatic restart will occur 30 minutes after the diagnostic occurs. If the unit is successfully restarted, the diagnostic is cleared. If the unit undergoes another **Low Coil Temp Detection** diagnostic within a 24-hour period, the unit will be locked out until it is manually reset.

Note: *Freeze protection will also perform a smart reset.*

Low Coil Temperature Protection (UC400)

For more information refer to *Installation, Operation, and Maintenance: Tracer™ UC400 Programmable Controller Factory- or Field-installed for Blower Coil and Fan Coil* (BAS-SVX48B-EN, or the most recent revision) and the preceding section, "Smart Reset (UC400)".

Condensate Overflow (UC400)

For more information refer to *Installation, Operation, and Maintenance: Tracer™ UC400 Programmable Controller Factory- or Field-installed for Blower Coil and Fan Coil* (BAS-SVX48B-EN, or the most recent revision).

Fan Status (UC400)

In 1-, 2- and 3-speed fans, the status is based on the statuses of the supply fan output multistate and analog points dedicated to fan control. The fan status is reported as **HIGH**, **MEDIUM**, **LOW**, and as a percentage, whenever the fan is running. The fan status is reported as **OFF** whenever the fan is not running. In addition, a fan status switch can be connected to binary input 5 (BI5) to monitor the status of the fan for belt-driven or direct-driven units (except Trane Macon factory ECM fan motor units). The fan status switch provides feedback to the controller as follows:

- If the fan is not operating when the controller has the fan controlled to **ON**, the controller generates a *Low Airflow-Supply Fan Failure* diagnostic.
- If the UC400 controller energizes the fan output for 1 minute, and the fan status switch indicates no fan operation, the controller performs a unit shutdown and generates a *Low Airflow-Supply Fan Failure* diagnostic.
- If the fan has been operating normally for one minute, but the fan status switch indicates no fan operation, the same diagnostic is generated.

This manual diagnostic discontinues unit operation until the diagnostic has been cleared from the controller. If a diagnostic reset is sent to the controller, and the fan condition still exists, the controller attempts to run the fan for 1 minute before generating another diagnostic and performing a unit shutdown. A diagnostic reset can be sent to the controller from the Tracer TU *Alarms* page or by temporarily overriding the *Reset Diagnostic Request* on the Tracer TU *Binary Status* page.

Note: *In the ECM fan application, the ECM engine board will monitor the status of the fan. In case of a failure, the engine board will disable the motor immediately, and the low airflow diagnostic is sent.*

Fan Off Delay (UC400)

After heating has been controlled **OFF**, the UC400 controller keeps the fan energized for an additional 30 seconds in order to remove residual heat from the heating source.

Filter Maintenance Timer (UC400)

The filter maintenance timer tracks the amount of time (in hours) that the fan is enabled. The Filter Runtime Hours Setpoint (configurable using the Tracer TU service tool) is used to set the amount of time until maintenance (typically, a filter change) is required. The timer can be enabled/disabled from the **Supply Fan** group on the **Setup Parameters** page in Tracer TU.

The UC400 controller compares the fan run time to filter runtime hours setpoint. Once the setpoint is reached, the controller generates a **Filter Change Required** diagnostic. When the diagnostic is cleared, the controller resets the filter maintenance timer to zero, and the timer

begins accumulating fan run time again. The diagnostics can be cleared and the filter timer reset by temporarily overriding the **Filter Timer Reset Request** on the **Binary Status** page or by using the reset button on the **Alarms** page in Tracer TU.

Freeze Avoidance (UC400)

Freeze avoidance is used for low ambient temperature protection. It is initiated *only* when the fan is **OFF**. The UC400 controller enters the freeze avoidance mode when the outdoor air temperature is below the freeze avoidance setpoint (configurable using the Tracer TU service tool). The controller disables freeze avoidance when the outdoor air temperature rises 3°F (1.7°C) above the freeze avoidance setpoint.

The following occurs when the controller is in freeze avoidance mode:

- Valves are driven open to allow water to flow through the coil
- Fan is **OFF**
- Economizing is disabled
- The outdoor/return air damper is closed
- DX cooling is **OFF**
- Electric heat stages are **OFF**

Freeze Protection (Discharge Air Temperature Low Limit) (UC400)

The UC400 controller monitors the discharge air temperature with a 10 kΩ thermistor wired to AI4. The freeze protection operation is initiated whenever the discharge air temperature falls below the discharge air temperature low limit. The discharge air temperature low limit is configurable using the Tracer TU service tool. During freeze protection, the controller increases the heating capacity or decreases the cooling capacity in order to raise the discharge air temperature above the low limit. If the discharge air temperature remains below the low limit for 3 minutes, the controller generates a **Discharge Air Temp Limit** diagnostic.

Freeze protection will also perform a smart reset. Refer to *"Smart Reset (UC400)," p. 104*.

Maintenance

Maintenance Procedures

Perform the following maintenance procedures to ensure proper unit operation.

⚠WARNING

Live Electrical Components!

During installation, testing, servicing and troubleshooting of this product, it may be necessary to work with live electrical components. Have a qualified licensed electrician or other individual who has been properly trained in handling live electrical components perform these tasks. Failure to follow all electrical safety precautions when exposed to live electrical components could result in death or serious injury.

⚠WARNING

Hazardous Voltage w/Capacitors!

Disconnect all electric power, including remote disconnects and discharge all motor start/run capacitors before servicing. Follow proper lockout/tagout procedures to ensure the power cannot be inadvertently energized. For variable frequency drives or other energy storing components provided by Trane or others, refer to the appropriate manufacturer's literature for allowable waiting periods for discharge of capacitors. Verify with an appropriate voltmeter that all capacitors have discharged. Failure to disconnect power and discharge capacitors before servicing could result in death or serious injury.

For additional information regarding the safe discharge of capacitors, see PROD-SVB06A-EN

Air Filters

Change or clean air filters at least twice a year. Filters require more frequent care under high load or dirty air conditions since a clogged filter reduces airflow. Table 1, p. 12 lists filter size and quantity by unit size. Throwaway and pleated media filters are available for all units. Follow the instructions below to replace the disposable filters.

All Models Except Vertical Cabinets

Remove the front panel of the vertical recessed unit and open the bottom panel door of the horizontal cabinet and horizontal recessed unit to access the filter. The front panel of the vertical cabinet unit does not require removal to change the filter.

Note: *Vertical recessed, horizontal cabinet, and horizontal recessed units with a bottom return have filter guides to secure the filter in position. Also, if these unit types have a fresh air opening, they require an additional filter for the fresh air opening.*

NOTICE:

Replace All Panels and Filters Properly!

All unit panels and filters must be in place prior to unit startup. Failure to have panels and filters in place could result in equipment damage.

Inspecting and Cleaning Drain Pans

Clean the fan-coil unit's main and auxiliary drain pans to ensure the unit drains condensate properly.

Check the condensate drain pan and drain line to assure the condensate drains properly at least every six months or as dictated by operating experience.

If evidence of standing water or condensate overflow exists, immediately identify and remedy the cause.

Clean the drain pans of any moisture or debris.

Auxiliary Drain Pan

1. To remove the auxiliary drain pan, loosen the hose clamp (installer supplied) around the drain connection collar and disconnect the drain line.
2. Remove the overflow drain line to the auxiliary drain pan if it was installed.
3. Remove the condensate overflow switch option from the auxiliary drain pan.
4. Slide the pan horizontally towards the end of the large groove of the mounting slots in the chassis end panel and remove pan from unit (see Figure 37).

Figure 37. Insert the auxiliary drain pan tabs into these slots in the fan-coil's chassis end panel (horizontal unit shown).

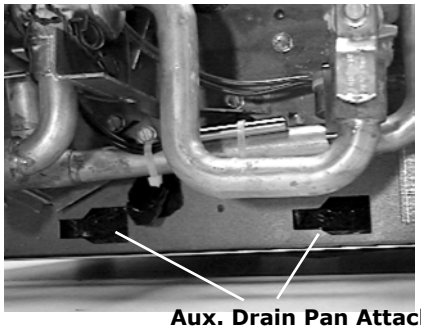

Main Drain Pan

See Figure 38 to replace main drain correctly.

Figure 38. When replacing the fan-coil's main drain pan, install it correctly under the z-bar.

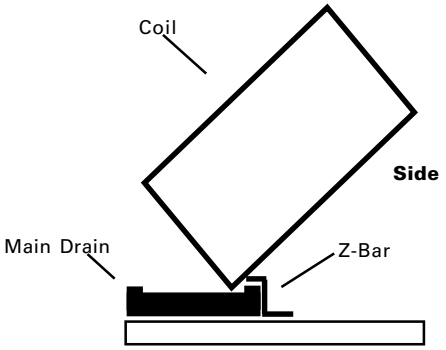

Vertical Units. To remove the main drain pan on vertical fan-coil units, disconnect the clips holding the pan to the fanboard. Disconnect the main and overflow drain hoses and slide pan forward to remove (see Figure 39).

Figure 39. To remove the main drain pan on vertical fan-coil units, disconnect the clips holding the pan to the fanboard.

Horizontal Units. To remove the main drain pan on a horizontal fan-coil unit, peel the insulation from the edges of the pan's underside to access the mounting screws. Remove the screws and lower the end of the drain pan closest to the control box. Remove the drain spout by pulling it from the hole in the chassis end panel (see Figure 40).

Figure 40. To remove the main drain pan on horizontal fan-coil units, peel the insulation from the edges of the pan's underside to access the mounting screws.

Note: *Do not operate the fan-coil unit without the main and auxiliary drain pans in place to prevent condensate leakage.*

Coil Maintenance

Keep coils clean to maintain maximum performance. For operation at its highest efficiency, clean the coil often during periods of high demand or when dirty conditions prevail. Clean the coil a minimum of once a year to prevent dirt buildup in the coil fins, where it may not be visible.

Remove large debris from the coils and straighten fins before cleaning. Remove filters before cleaning.

Clean the coil fins using steam with detergent, hot water spray and detergent, or a commercially available chemical coil cleaner. Be sure to rinse coils thoroughly after cleaning.

⚠WARNING

Hazardous Chemicals!

Coil cleaning agents can be either acidic or highly alkaline. Handle chemical carefully. Proper handling should include goggles or face shield, chemical resistant gloves, boots, apron or suit as required. For personal safety refer to the cleaning agent manufacturer's Materials Safety Data Sheet and follow all recommended safe handling practices. Failure to follow all safety instructions could result in death or serious injury.

Inspecting and Cleaning Coils

Coils become externally fouled as a result of normal operation. Dirt on the coil surface reduces it's ability to transfer heat that can result in comfort problems, increased airflow resistance and thus increased operating energy costs. If the coil surface dirt becomes wet, which commonly occurs with cooling coils, microbial growth (mold) may result, causing unpleasant odors and serious health-related indoor air quality problems.

Inspect coils at least every six months or more frequently as dictated by operating experience. Cleaning frequently

is dependent upon system operating hours, filter maintenance, and efficiency and dirt load. Follow the suggested methods in the following paragraphs.

Steam and Hydronic Coil Cleaning Procedure

1. Disconnect all electrical power to the unit.
2. Don the appropriate personal protective equipment (PPE).
3. Access both sides of the coil.
4. Use a soft brush to remove loose debris from both sides of the coil.
5. Use a steam cleaning machine, starting from the top of the coil and working downward. Clean the leaving air side of the coil first, then the entering air side. Use a block-off to prevent steam from blowing through the coil and into a dry section of the unit.
6. Repeat step five as necessary. Confirm that the drain line is open following completion of the cleaning process.
7. Allow the unit to dry thoroughly before putting the system back into service.
8. Straighten any coil fins that may be damaged with a fin rake.
9. Replace all panels and parts and restore electrical power to the unit.

Winterizing the Coil

Make provisions to drain coils that are not in use, especially when subjected to freezing temperatures.

To drain the coil, blow the coil out with compressed air. Next, fill and drain the tubes with full-strength ethylene glycol several times. Drain the coil as completely as possible.

NOTICE:

Coil Freeze-up Damage!

Failure to properly drain and vent coils when not in use during freezing temperatures may result in coil freeze-up damage.

Fan Board Assembly Removal

Follow the procedure below when replacing the coil or making repairs to the fan or motor.

⚠WARNING

Hazardous Voltage w/Capacitors!

Disconnect all electric power, including remote disconnects and discharge all motor start/run capacitors before servicing. Follow proper lockout/tagout procedures to ensure the power cannot be inadvertently energized. For variable frequency drives or other energy storing components provided by Trane or others, refer to the appropriate manufacturer's literature for allowable waiting periods for discharge of capacitors. Verify with an appropriate voltmeter that all capacitors have discharged. Failure to disconnect power and discharge capacitors before servicing could result in death or serious injury.

For additional information regarding the safe discharge of capacitors, see PROD-SVB06A-EN

Vertical Units.

1. Remove the front panel of cabinet and recessed units.
2. Pull the main and overflow drain hoses of the main drain pan into the inside of the fan-coil chassis end panel.
3. Remove the two fanboard mounting screws.
4. Slide the fanboard out horizontally to remove.

Horizontal Units.

1. Open the bottom panel of cabinet and recessed models.
2. Remove the main drain pan following the instructions given under the drain pan section above for horizontal fan-coil units.
3. While supporting the fanboard in place, remove the two fanboard mounting screws which secure the fanboard to the unit.

Replacing Motors

NOTICE:

Heavy Object!

Support the fanboard when removing it from the unit. Failure to properly support fanboard may result in minor to moderate personal injury.

Motors are attached to the fan boards with screws at the rear of the motors. Fan wheels are attached with Allen screws on the fan hubs. In most applications, it is necessary to remove the fan board to change out the motor. The fan board is easily removable, with screws on the front left and right edges of fan boards (vertical units) or on the front left underside and front right underside of the fan board (horizontal units).

Vertical Units

Notes:

- *In vertical units, wiring to the motor transitions from the control panel onto a trough onto the fan board.*
- *The motor harnesses are routed through holes at the motor location below the fan board and into the motors with a latching multi-plug.*
- *The crossover harnesses, which are used to make connections to the piping side of the unit, are routed in the same manner but continue to the piping side entirely through the trough on the fan board.*
- *On vertical fan-coil units with drain pans, a drain pan support covers most of the wiring. Please be sure to remove or secure the wiring before removing fan board.*
- *Fan board attachment screws are located on the front left and right edges of fan boards, and may be concealed by gasketing.*

Routing Motor and Crossover Harnesses

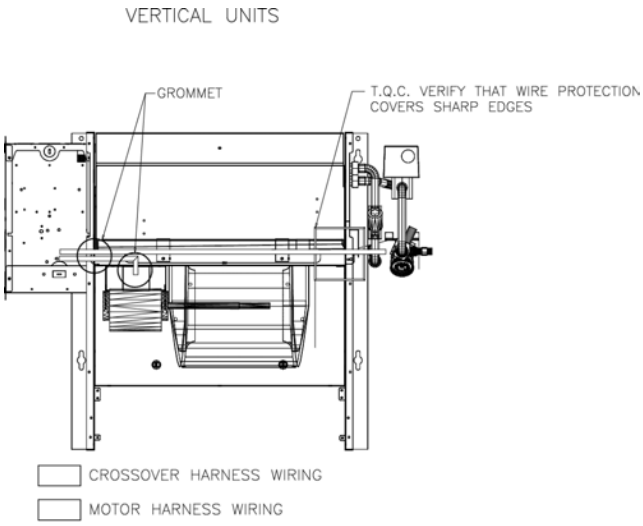

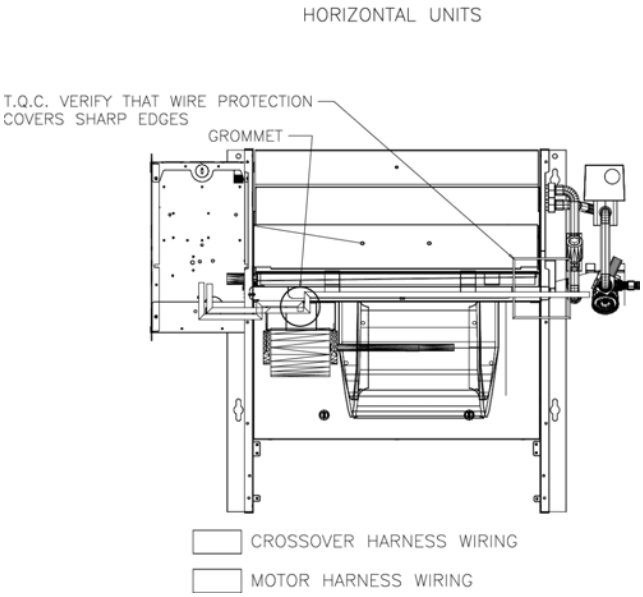

Fan board attachment screw locations on vertical units may be hidden behind “H” insulation.

Figure 41. Motor attachment screws (located behind motor)

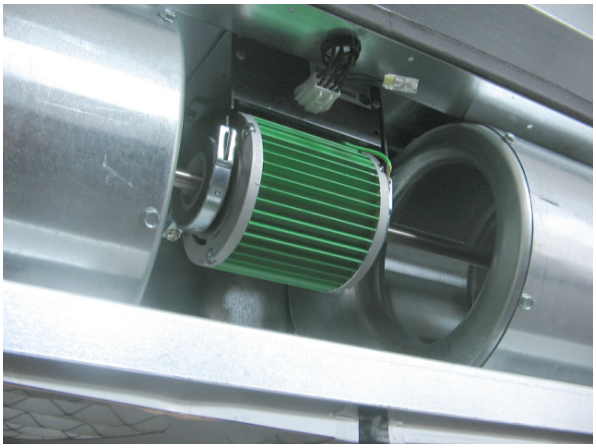

Note: *Motor plug with latch.*

Horizontal Units

Notes:

- *In horizontal units, wiring to the motor is routed below the fan board but is wire-tied to the fan board for harness management and to avoid sharp edges.*
- *The motor harnesses terminate at the motor location with a latching multi-plug.*
- *The crossover harnesses, which are used to make connections to the piping side of the unit, are routed initially below the fan board, but transition into a trough on the top side of the fan board, and into the piping section of the unit.*
- *Fan board attachment screws are located on the front left underside and front right underside of the fan board.*

Work Instruction Steps

⚠WARNING

Hazardous Voltage w/Capacitors!

Disconnect all electric power, including remote disconnects and discharge all motor start/run capacitors before servicing. Follow proper lockout/tagout procedures to ensure the power cannot be inadvertently energized. For variable frequency drives or other energy storing components provided by Trane or others, refer to the appropriate manufacturer's literature for allowable waiting periods for discharge of capacitors. Verify with an appropriate voltmeter that all capacitors have discharged. Failure to disconnect power and discharge capacitors before servicing could result in death or serious injury.

In general, replacement of a motor needs to be carried out as follows:

1. Remove front panels of unit.
2. Remove drain pan and drain pan support (vertical units) or remove drain pan (horizontal units).
3. Free the motor and crossover harnesses from the fan board, either by unplugging from the motors and valves and threading backwards, or by unplugging the motor plug from the adapter boards.
4. Remove the fan board attachment screws and carefully lower/slide out fan board.
5. Remove at least one fan housing and loosen fan Allen screw on first fan. Loosen the wheel of the other (if a double-shafted motor).
6. Unscrew the motor and remove.
7. Insert the replacement motor (plug must face front of fan board) and drive the screws in with 100 in·lb of torque.

Control Device Replacement

To order control components such as relays, contactors, transformers, low temperature detection devices, condensate overflow detection devices, differential pressure switches, sensors, control valves and actuators, contact the local Trane Service Parts Center. To order, the Trane parts center will need the unit model number (which can be found on the unit nameplate), the serial number, and the part name or ID.

Periodic Maintenance Checklists

Monthly Checklist

The following check list provides the recommended maintenance schedule to keep the unit running efficiently.

⚠WARNING

Live Electrical Components!

During installation, testing, servicing and troubleshooting of this product, it may be necessary to work with live electrical components. Have a qualified licensed electrician or other individual who has been properly trained in handling live electrical components perform these tasks. Failure to follow all electrical safety precautions when exposed to live electrical components could result in death or serious injury.

⚠WARNING

Hazardous Voltage w/Capacitors!

Disconnect all electric power, including remote disconnects and discharge all motor start/run capacitors before servicing. Follow proper lockout/tagout procedures to ensure the power cannot be inadvertently energized. For variable frequency drives or other energy storing components provided by Trane or others, refer to the appropriate manufacturer's literature for allowable waiting periods for discharge of capacitors. Verify with an appropriate voltmeter that all capacitors have discharged. Failure to disconnect power and discharge capacitors before servicing could result in death or serious injury.

For additional information regarding the safe discharge of capacitors, see PROD-SVB06A-EN

Monthly Maintenance

1. Inspect unit air filters. Clean or replace if airflow is blocked or if filters are dirty.
2. Check the main and auxiliary drain pans on fan-coil units to be sure the pans are clean and do not impede the condensate flow through the drain line.

Annual Maintenance

Check and tighten all set screws, bolts, locking collars and sheaves.

1. Inspect the unit cabinetry for chips or corrosion. Clean or repair to provide unit protection.
2. Inspect the fan wheel and housing for damage. Rotate the fan wheel manually to be sure movement is not blocked by obstructions.
3. Inspect the coil fins for excessive dirt or damage. Remove dirt and straighten fins.
4. Clean and tighten all electrical connections.
5. Inspect the strainer option for debris trapped in the filter screen.

Diagnostics

Output Testing and Diagnostics (Tracer ZN520)

Table 36. Tracer ZN520 diagnostics

Diagnostic	Fan	Other Outputs[a]
Condensate overflow	Off	Valves Closed, Fresh air damper Closed, Electric heat Off, Baseboard heat Off
Low temperature detection	Off	Valves Open, Fresh air damper Closed, Electric heat Off, Baseboard heat Off
Low air flow - fan failure	Off	Valves Closed, Fresh air damper Closed, Electric heat Off, Baseboard heat Off
Space temperature failure	Off	Valves Closed, Fresh air damper Closed, Electric heat Off, Baseboard heat Off
Entering water temp failure	On	Valves Enabled[b], Fresh air damper Enabled[b], Electric heat Enabled[b], Baseboard heat Off
Discharge air temp low limit	Off	Valves Open, Fresh air damper Closed, Electric heat Off, Baseboard heat Off
Discharge air temp failure	Off	Valves Closed, Fresh air damper Closed, Electric heat Off, Baseboard heat Off
Fresh air temp failure	On	Valves Enabled, Fresh air damper Minimum position[c], Electric heat Enabled, Baseboard heat Enabled
Relative humidity failure	On	Valves Enabled, Fresh air damper Enabled, Electric heat Enabled, Baseboard heat Enabled
Generic 4–20mA failure	On	Valves Enabled, Fresh air damper Enabled, Electric heat Enabled, Baseboard heat Enabled
CO_2 Input failure	On	Valves Enabled, Fresh air damper Enabled, Electric heat Enabled, Baseboard heat Enabled
Maintenance required	On	Valves Enabled, Fresh air damper Enabled, Electric heat Enabled, Baseboard heat Enabled
Local fan mode failure	On	Valves Enabled, Fresh air damper Enabled, Electric heat Enabled, Baseboard heat Enabled
Local setpoint failure	On	Valves Enabled, Fresh air damper Enabled, Electric heat Enabled, Baseboard heat Enabled
Invalid unit configuration	Off	Valves Disabled, Fresh air damper Disabled, Electric heat Disabled, Baseboard heat Disabled
Normal—power up	On	Valves Enabled, Fresh air damper Enabled, Electric heat Enabled

(a) The generic binary output (TB4-1, TB4-2) state is unaffected by all unit diagnostics.
(b) When the entering water temperature is required but not present, the Tracer ZN520 controller generates a diagnostic to indicate the sensor loss condition. The controller automatically clears the diagnostic once a valid entering water temperature value is present (non-latching diagnostic). When the entering water temperature sensor fails, the controller prohibits all hydronic cooling operation, but allows the delivery of heat when heating is required. In the Cool mode, all cooling is locked-out, but normal fan and outdoor air damper operation is permitted.
(c) When the outdoor air temperature sensor has failed or is not present, the Tracer ZN520 controller generates a diagnostic to indicate the sensor loss condition. The controller automatically clears the diagnostic once a valid outdoor air temperature value is present (non-latching diagnostic). When the outdoor air temperature sensor fails or is not present, the controller prohibits economizer operation.

Translating Multiple Diagnostics (Tracer ZN520)

The controller senses and records each diagnostic independently of other diagnostics. It is possible to have multiple diagnostics present simultaneously. The diagnostics are reported in the order they occur.

Possible diagnostics include:

- Low temperature detection
- Condensate overflow
- Low air flow—fan status
- Discharge air temp limit
- Space temperature failure[1]
- Entering water temp failure[1]
- Discharge air temp failure[1]
- Outdoor air temp failure[1]
- Local setpoint failure[1]
- Local fan mode failure[1]
- CO_2 sensor failure[1]
- Generic AIP failure[1]
- Humidity input failure[1]
- Defrosting compressor lockout[1]
- Maintenance required
- Invalid unit configuration
- Generic temperature failure
- Discharge air low limit

Resetting Diagnostics (Tracer ZN520)

There are a number of ways in which diagnostics are reset:

1. Automatic reset by the controller
2. By initiating a manual output test at the controller
3. By cycling power to the controller
4. Through Rover, Trane's service tool
5. Tracer ZN520: by using any other communicating device ab le to access the controller's diagnostic reset input.
6. Tracer ZN520: by cycling the fan switch from Off to any speed setting.

Automatic Reset by the Controller (Tracer ZN520)

The controller includes an automatic diagnostic reset function that attempts to automatically restore the unit when a low temperature diagnostic occurs.

Note: *The controller implements the automatic diagnostic reset function only once every 24 hours. For the controller to increment the 24 hour timer, you must maintain power to the controller. Cycling power resets all timers and counters.*

After the controller detects the first special diagnostic, the unit waits 30 minutes before invoking the automatic diagnostic reset function. The automatic diagnostic reset function clears the special diagnostic and attempts to restore the controller to normal operation. The controller resumes normal operation until another diagnostic occurs.

[1] Non-latching diagnostics automatically reset when the input is present and valid.

Note: *The automatic diagnostic reset function does not operate during the manual output test sequence.*

If a special diagnostic occurs within 24 hours after an automatic diagnostic reset, the controller must be manually reset. Other possible methods of resetting diagnostics are described in the sections that follow.

Manual Output Test (Tracer ZN520)

To verify proper end device operation, press the controller's Test button. This exercise will verify all outputs in a predefined sequence, the first of which will attempt to reset the controller diagnostics if any are present.

Cycling Power to the Controller (Tracer ZN520)

After removing and reapplying the 24 Vac power from the board, the unit cycles through a power-up sequence. By default, the controller attempts to reset all diagnostics present at power-up. Diagnostics present at power-up and those that occur after power-up are handled according to Table 37.

Table 37. Tracer ZN510 controller diagnostics

Diagnostic	Latching?	Fan	Valves	Elec Heat	Damper
Auxiliary temp. failure	No	Enabled	No action	No action	No action
Condensate overflow detection	Yes	Off	Closed	Off	Closed
Entering water temp. failure	No	Enabled	Enabled	Enabled	Enabled
Fan mode failure	No	Enabled	Enabled	Enabled	Enabled
Invalid unit configuration failure	Yes	Disabled	Disabled	Disabled	Disabled
Low temp. detection	Yes	Off	Open	Off	Closed
Maintenance required	Yes	Enabled	No action	No action	No action
Setpoint	No	Enabled	No action	No action	No action
Zone temp. failure	No	Off	Closed	Off	Closed

Notes:
1. Priority Level: Diagnostics are listed in order from highest to lowest priority. The controller senses and records each diagnostic independently of other diagnostics. It is possible to have multiple diagnostics present simultaneously. The diagnostics affect unit operation according to priority level.
2. Latching: A latching diagnostic requires a manual reset of the controller; while a non-latching diagnostic automatically resets when the input is present and valid.
3. Enabled: End device is allowed to run if there is a call for it to run.
4. Disabled: End device is not allowed to run even if there is a call for it to run.
5. No Action: The diagnostic has no affect on the end device.

Using Trane's Service Tool, Rover (Tracer ZN520)

Rover, Trane's service tool, can reset diagnostics present in the controller and troubleshoot the unit. For more information, refer to the Trane publication EMTX-SVX01G-EN (*Rover Service Tool: Installation, Operation, and Programming Guide*).

Diagnostic Reset (Tracer ZN520)

Any device that can communicate the network variable nviRequest (enumeration "clear_alarm") can reset diagnostics in the Tracer ZN520 controller.The controller also attempts to reset diagnostics whenever power is cycled.

Cycling the Fan Switch (Tracer ZN520)

Cycle the fan speed switch from Off to any speed and the controller resets all diagnostics. Diagnostics may recur immediately if the problem still exists.

Table 38. Fan outputs do not energize (Tracer ZN520)

Probable Cause	Explanation
Random start	After power-up, the controller always observes a random start that varies observed between 0 and 25 seconds. The controller remains off until the random start time expires.
Power-up control wait	When power-up control wait is enabled (non-zero time), the controller remains off until one of two conditions occurs: 1. The controller exits power-up control wait once it receives communicated information. 2. The controller exits power-up control wait once the power-up control wait time expires.
Cycling fan operation	When the fan mode switch is in the auto position, the unit fan cycles off when there is no call for heating or cooling. The heating/cooling sources cycle on or off periodically with the unit fan to match the capacity according to pulse-width-modulation (PWM) logic.
Unoccupied operation	The fan cycles with capacity when the unit is in unoccupied mode. This occurs even if the unit is in continuous fan operation. While unoccupied, the fan cycles on or off with heating/cooling to provide varying amounts of heating or cooling to the space to match the to pulse-width-modulation (PWM) logic.
Fan mode off	When using the local fan mode switch to determine the fan operation, the off position controls the unit fan to off.
Requested mode: off	It is possible to communicate the operating mode (such as off, heat, and cool) to the controller. When "off" is communicated to the controller, the unit controls the fan to off. The unit is not capable of heating or cooling when the controller is in this mode.
Diagnostic present	A specific list of diagnostics effects fan operation. For more information, see "Diagnostics," p. 112.
No power to the controller	If the controller does not have power, the unit fan will not operate. For the controller to operate normally, it must have an input voltage of 24 Vac. When the green LED is off continuously, the controller does not have sufficient power or the controller has failed.
Manual output test	The controller includes a manual output test sequence to verify binary output operation and the associated wiring. However, based on the current step in the test sequence, the unit fan may not be powered on. Refer to "Manual Output Test (Tracer ZN520)," p. 113.
Unit wiring	The wiring between the controller outputs and the fan relays and contacts must be present and correct for normal fan operation. Refer to the typical unit wiring diagrams (see "Wiring Diagrams," p. 133).

Table 39. Valves stay closed (Tracer ZN520)

Probable Cause	Explanation
Normal operation	The controller opens and closes the valves to meet the unit capacity requirements.
Requested mode: off	It is possible to communicate the operating mode (such as off, heat, and cool) to the controller. When off is communicated to the controller, the unit controls the fan to off. The unit is not capable of heating or cooling when the controller is in this mode.
Valve override	The controller can communicate a valve override request. This request affects the valve operation.
Manual output test	The controller includes a manual output test sequence to verify analog and binary output operation and the associated wiring. However, based on the current step in the test sequence, the valves may not be open. Refer to "Manual Output Test (Tracer ZN520)," p. 113.
Diagnostic present	A specific list of diagnostics affects valve operation. For more information, see "Diagnostics," p. 112.
Sampling logic	The controller includes entering water temperature sampling logic that automatically invokes during 2-pipe or 4-pipe changeover. It determines when the entering water temperature is either too cool or too hot for the desired heating or cooling mode. Refer to "Entering Water Temperature Sampling Function (Tracer ZN010 and ZN510)," p. 89.
Unit configuration	The controller must be properly configured based on the actual installed end devices and application. When the unit configuration does not match the actual end device, the valves may not work correctly.
No power to the controller	If the controller does not have power, the valves do not operate. For the controller to operate normally, it must have an input voltage of 24 Vac. When the green LED is off continuously, the controller does not have sufficient power, or the controller has failed.
Unit wiring	The wiring between the controller outputs and the valve(s) must be present and correct for normal valve operation. Refer to the typical unit wiring diagrams (see "Wiring Diagrams," p. 133).

Table 40. Valves stay open (Tracer ZN520)

Probable Cause	Explanation
Normal operation	The controller opens and closes the valves to meet the unit capacity requirements.
Valve override	The controller can communicate a valve override request to affect the valve operation.
Manual output test	The controller includes a manual output test sequence that verifies analog and binary output operation and the associated wiring. However, based on the current step in the test sequence, the valves may be open. Refer to "Manual Output Test (Tracer ZN520)," p. 113.
Diagnostic present	A specific list of diagnostics affects valve operation. For more information, see "Diagnostics," p. 112.
Sampling logic	The controller includes entering water temperature sampling logic that automatically invokes during 2-pipe or 4-pipe changeover to determine if the entering water temperature is correct for the unit operating mode. Refer to "Entering Water Temperature Sampling Function (Tracer ZN010 and ZN510)," p. 89.
Unit configuration	The controller must be properly configured based on the actual installed end devices and application. When the unit configuration does not match the actual end device, the valves may not work correctly.
Unit wiring	The wiring between the controller outputs and the valve(s) must be present and correct for normal valve operation. Refer to the typical unit wiring diagrams (see "Wiring Diagrams," p. 133).

Table 41. Electric heat not operating (Tracer ZN520)

Probable Cause	Explanation
Normal operation	The controller cycles electric heat on and off to meet the unit capacity requirements.
Requested mode: off	It is possible to communicate the operating mode (such as off, heat, cool) to the controller. When off is communicated to the controller, the units shuts off the electric heat.
Communicated disable	Numerous communicated requests may disable electric heat, including an auxiliary heat enable input and the heat/cool mode input. Depending on the state of the communicated request, the unit may disable electric heat.
Manual output test	The controller includes a manual output test sequence that verifies analog and binary output operation and associated output wiring. However, based on the current step in the test sequence, the electric heat may not be on. Refer to "Manual Output Test (Tracer ZN520)," p. 113.
Diagnostic present	A specific list of diagnostics affects electric heat operation. For more information, see "Diagnostics," p. 112.
Unit configuration	The controller must be properly configured based on the actual installed end devices and application. When the unit configuration does not match the actual end device, the electric heat may not work properly.
No power to the controller	If the controller does not have power, electric heat does not operate. For the controller to operate normally, a 24 Vac input voltage must be applied. When the green LED is off continuously, the controller does not have sufficient power or has failed.
Unit wiring	The wiring between the controller outputs and the electric heat contacts must be present and correct for normal electric heat operation. Refer to the typical unit wiring diagrams (see "Wiring Diagrams," p. 133).
ECM Motor / Control Board Failure	ECM controls include sophisticated fan proving / interlock circuitry that will disable electric heat if one or more motors are not performing normally
Hot water is present on a changeover unit	On units with changeover coil and electric heat, simultaneous operation of hydronic heat and electric heat is not allowed.

Table 42. Fresh air damper stays open (Tracer ZN520)

Probable Cause	Explanation
Normal operation	The controller opens and closes the fresh air damper based on the controller's occupancy mode and fan status. Normally, the fresh air damper is open during occupied mode when the fan is running and closed during unoccupied mode.
Manual output test	The controller includes a manual output test sequence that verifies analog and binary output operation and associated output wiring. However, based on the current step in the test sequence, the fresh air damper may not be open. Refer to "Manual Output Test (Tracer ZN520)," p. 113.
Unit configuration	The controller must be properly configured based on the actual installed end devices and application. When the unit configuration does not match the actual end device, the damper may not work correctly.
Unit wiring	The wiring between the controller outputs and the fresh air damper must be present and correct for normal damper operation. Refer to the typical unit wiring diagrams (see "Wiring Diagrams," p. 133).

Table 43. Fresh air damper stays closed (Tracer ZN520)

Probable Cause	Explanation
Normal operation	The controller opens and closes the fresh air damper based on the controller's occupancy mode and fan status. Normally, the fresh air damper is open during occupied mode when the fan is running and closed during unoccupied mode.
Warmup and cooldown	The controller includes both a warmup and cooldown sequence to keep the fresh air damper closed during the transition from unoccupied to occupied. This is an attempt to bring the space under control as quickly as possible.
Requested mode: off	It is possible to communicate the operating mode (such as off, heat, cool) to the controller. When off is communicated to the controller, the unit closes the fresh air damper.
Manual output test	The controller includes a manual output test sequence that verifies analog and binary output operation and associated output wiring. However, based on the current step in the test sequence, the fresh air damper may not be open. Refer to "Manual Output Test (Tracer ZN520)," p. 113.
Diagnostic present	A specific list of diagnostics effects fresh air damper operation. For more information, see "Diagnostics," p. 112.
Unit configuration	The controller must be properly configured based on the actual installed end devices and application. When the unit configuration does not match the actual end device, the damper may not work correctly.
No power to the controller	If the controller does not have power, the fresh air damper does not operate. For the controller to operate normally, a 24 Vac input voltage must be applied. When the green LED is off continuously, the controller does not have sufficient power or has failed.
Unit wiring	The wiring between the controller outputs and the fresh air damper must be present and correct for normal damper operation. Refer to the typical unit wiring diagrams (see "Wiring Diagrams," p. 133).

Output Testing and Diagnostics (UC400)

This section provides information about the following:

- Output testing
- Diagnostics

Note: *For detailed description of LED activities and troubleshooting tips, refer to the section.*

Output Testing (UC400)

Important: Do not *directly overwrite the outputs. Output testing can be accomplished by overriding the following analog and multistate value points in the desired state or position:*

- *Cool valve request*
- *DX cool request*
- *Economizer request*
- *Electric heat request*
- *Heat valve request*
- *Supply fan speed request*

The points can be overridden on the Tracer TU analog or multistate pages by clicking on the **Override** icon in the control column. A higher priority (lower number) must be chosen over the current control setting.

Diagnostics (UC400)

Diagnostics are informational messages that indicate the operational status of the UC400 controller. In response to most diagnostics, the controller attempts to protect the equipment by enabling/disabling, or by opening/closing specific outputs. Other diagnostics provide information about the status of the controller, but have no effect on outputs. Diagnostics are reported in the order in which they occur. Multiple diagnostics can be present simultaneously. Diagnostic messages are viewed using the Tracer TU service tool or through a BAS.

Note: *Tracer TU will report only active diagnostics.*

Diagnostics Types (UC400)

Diagnostics are categorized according to the type of clearing method each uses and the type of information each provides.

The diagnostic types are:

- Manual (latching) diagnostics
- Automatic (non-latching) diagnostics
- Smart reset diagnostics
- Informational diagnostics

Note: *Clearing diagnostics refers to deleting diagnostics from the software; it does not affect the problem that generated the message.*

Manual (Latching) Diagnostics (UC400). Manual diagnostics (also referred to as latching) cause the unit to shut down. Manual diagnostics can be cleared from the UC400 controller in one of the following ways:

- By using the Tracer TU service tool to reset latching diagnostics on the **Alarms Status** tab or by temporarily overriding the **Reset Diagnostic Request** (bv/2) on the **Binary Status** tab.
- Through a building automation system.
- By cycling power to the controller. When the 24Vac power to the controller is cycled **OFF** and then **ON** again, a power-up sequence occurs.

Automatic (Non-latching) Diagnostics (UC400).

Automatic diagnostics clear automatically when the problem that generated the diagnostic is solved.

Smart Reset Diagnostics (UC400). Smart Reset Diagnostics are latching diagnostics that will auto-recover if the condition is corrected. After the controller detects the first smart reset diagnostic, the unit waits 30 minutes before initiating the smart reset function. If another diagnostic of this type occurs again within 24 hours after an automatic clearing, clear the diagnostic manually by using any of the ways listed under the preceding section, "Manual (Latching) Diagnostics (UC400)."

Informational Diagnostics (UC400). Informational diagnostics provide information about the status of the controller. They *do not* affect machine operation, but can be cleared from the controller using the BAS or Tracer SC.

Table of Diagnostics (UC400)

Table 44 lists each diagnostic that can be generated by the UC400 controller, the diagnostic effect on outputs *(consequences)*, and diagnostic type.

Note: *The generic binary output is unaffected by diagnostics.*

Table 44. UC4000 diagnostics

Diagnostic	Probable Cause	Consequences	Diagnostic Type
Filter change required	Fan run hours exceed the time set to indicate filter change.	• Fan **Unaffected** • Valves **Unaffected** • Electric heat **Unaffected**	Informational
Condensate overflow	The drain pan is full of water.	• Fan **OFF** • Valves **Closed** • Outdoor air damper **Closed** • DX/electric heat **OFF**	Manual
Low coil temp detection	The leaving fluid temperature may be close to freezing.	• Fan **OFF** • Valves **Open** • Outdoor air damper **Closed** • DX/electric heat **OFF**	Smart reset/ Manual
Low airflow supply fan failure	The fan drive belt, contactor, or motor has failed.	• Fan **OFF** • Valves **Closed** • Outdoor air damper **Closed** • DX/electric heat **OFF**	Manual

Table 44. UC4000 diagnostics (continued)

Diagnostic	Probable Cause	Consequences	Diagnostic Type
Space temperature failure[(a)]	Invalid or missing value for zone temperature.	• Discharge air temperature control runs • Unit shuts **OFF** if both space temperature and discharge air temperature fail	Automatic
Entering water temp failure	Invalid or missing value for zone temperature.	• Fan **Unaffected** (enabled) • Valves **Unaffected** • Outdoor air damper **Unaffected** • DX/electric heat **Unaffected**	Automatic
Discharge air temp low limit	Discharge air temperature has fallen below the Discharge Air Temperature Low Limit.	• Fan **OFF** • Valves **Open** • Outdoor air damper **Closed** • DX/electric heat **OFF**	Smart reset/ manual
Discharge air temp failure[(a)]	Invalid or missing value for discharge air temperature.	• Simplified zone control algorithm runs • Unit shuts OFF if zone temperature fails	Automatic
Outdoor air temp failure	Invalid or missing value for outdoor air temperature.	• Fan **Unaffected** • Valved **Unaffected** • Outdoor air damper **Minimum Position** • DX cooling/electric heat **unaffected**	Automatic
Humidity input failure	Invalid or missing value for relative humidity.	• Fan **Unaffected** • Valves **Unaffected** • Outdoor air damper **Unaffected** • DX cooling/electric heat **Unaffected**	Automatic
CO_2 sensor failure	Invalid or missing value for CO_2.	• Fan **Unaffected** • Valves **Unaffected** • Outdoor air damper **Unaffected** • DX cooling/electric heat **Unaffected**	Informational
Generic AIP failure	Invalid or missing value for generic analog input.	• Fan **Unaffected** • Valves **Unaffected** • Outdoor air damper **Unaffected** • DX cooling/electric heat **Unaffected**	Informational
Local fan mode failure	Invalid or missing fan-speed switch *(reverts to default fan speed)*.	• Fan **Unaffected** • Valves **Unaffected** • Outdoor air damper **Unaffected** • DX cooling/electric heat **Unaffected**	Automatic
Local setpoint failure	Invalid or missing value for zone temperature setpoint *(reverts to default setpoint)*.	• Fan **Unaffected** • Valves **Unaffected** • Outdoor air damper **Unaffected** • DX cooling/electric heat **Unaffected**	Automatic

(a) For detailed information about zone temperature control methods, refer to "Zone Temperature Control (UC400)," p. 100.

Troubleshooting (Wireless Controls)

Locations of LEDs, Test button, Test Symbols, and Error Codes

The receiver for all models has four LEDs: LED1, LED2, LED3, and LED5. Figure 42 shows their locations.

Note: *To view LEDs on a flush mount receiver on a fan-coil unit, the front panel of the unit must be removed.*

Figure 42. LED locations on the receiver

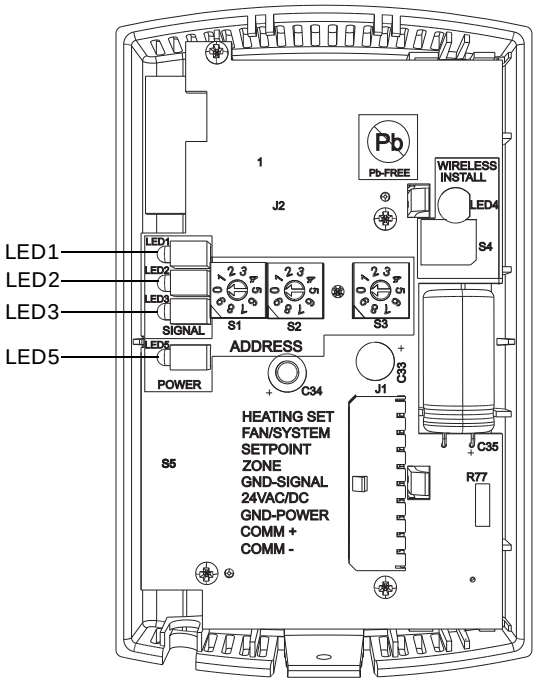

The sensor for model WZS have four LEDs: LED1, LED2, LED3, and LED5. The sensor for model WDS has test symbols and error codes that appear on the display. All three sensor models have a Test button. Figure 43 shows their locations.

Figure 43. LED, Test button, and symbol locations on the sensor

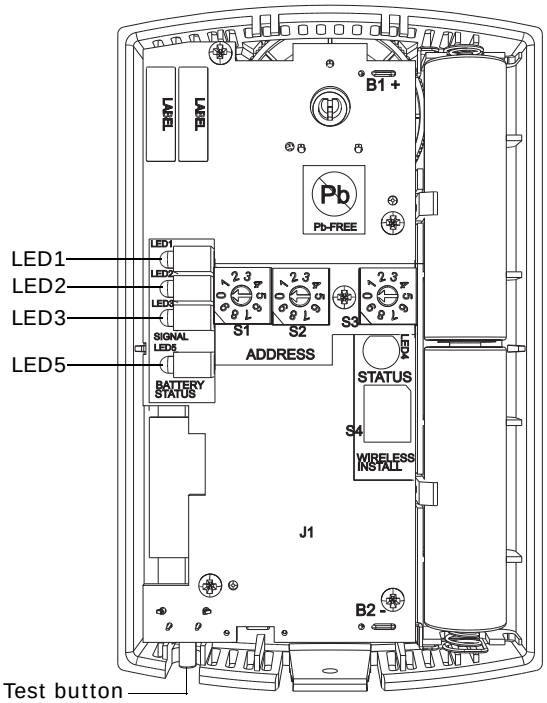

WZS sensor

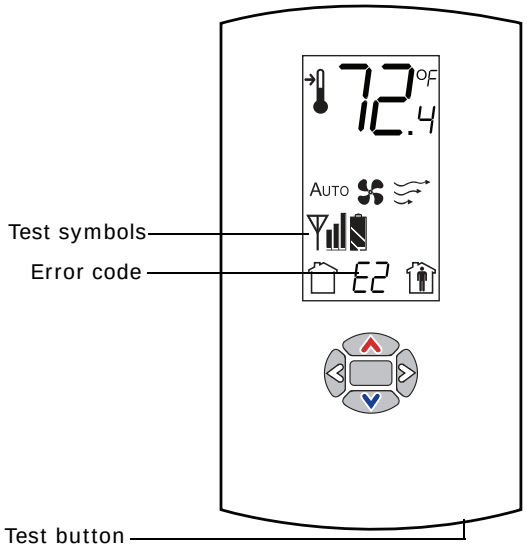

WDS sensor

Diagnostics (Wireless Controls)

LED1, LED2, and LED3, located on the sensor of model WZS respond to diagnostics by exhibiting specific blinking patterns. View their response by pressing the Test button (see Table 45, p. 118).

Error codes appear on the display of the model WDS sensor when diagnostics occur (see Table 45).

Table 45. Diagnostics on the sensor (wireless controls)

LED state when Test button is pressed (WZS sensor)	Error code (WDS sensor display)	Indicates...
N/A	E0, E5, E7	Sensor failure • Replace sensor
LED1: Off LED2: Off LED3[(a)]: 1-blink pattern repeated 3 times	E1	Disassociated • Sensor is not associated with a receiver.
LED1: Off LED2: Off LED3[(a)]: 2-blink pattern repeated 3 times	E2	Address set to 000 • Address not set to between 001–999.
LED1: Off LED2: Off LED3[(a)]: 3-blink pattern repeated 3 times	E3	Software error • Replace sensor
LED1: Off LED2: Off LED3[(a)]: 4-blink pattern repeated 3 times	E4	Input voltage too high • No RF transmission is permitted with an input battery voltage greater than 3.9 V.

(a) Blink pattern is On for 1/4 s, Off for 1/4 s, with 2 s Off between repetitions.

LED1, LED2, and LED3, located on the receiver of all models, respond to diagnostics by exhibiting specific blinking patterns. They respond independently of any user action (see Table 46).

Table 46. Diagnostics on the receiver (wireless controls)

LED state	Indicates...
LED1: Off LED2: Off LED3: 1-blink pattern repeated continuously[(a)]	Disassociated • Receiver is not associated, waiting for a sensor. • Receiver lost communication with sensor. • Receiver has no devices on its wireless personal area network. • Association with a device has been manually removed.
LED1: Off LED2: Off LED3: 2-blink pattern repeated continuously[(a)]	Address set to 000 • Address not set to between 001–999.
LED1: Off LED2: Off LED3: 3-blink pattern repeated continuously[(a)]	Not configured • Receiver configuration properties not properly set (defective receiver).

(a) Blink pattern is On for 1/4 s, Off for 1/4 s, with 2 s Off between repetitions.

Testing Signal Strength (Wireless Controls)

To initiate a signal strength test, push the Test button on the sensor (see location of Test button in Figure 43, p. 117).

- **Models WZS:** LED1, LED2, and LED3 respond by indicating signal strength. You can view them on the sensor (Table 47) and the receiver (Table 48).
- **Model WDS:** Test symbols on the sensor display indicate signal strength (Table 47). LED1, LED2, and LED3, on the receiver, respond by indicating signal strength (Table 48).

Table 47. Observing signal strength on the sensor (wireless controls)

User action	LED state (WZS sensors)	Symbol (WDS sensor display)	Indicates...
None	LED1: Off LED2: Off LED3: Off	No Test symbols appear	Normal state • No Test button press.
Press Test button on the sensor	LED1: Off LED2: Off LED3: Off		Associated; no communication with receiver • Associated, but no signal from the receiver after pressing Test button.
	LED1: On LED2: On LED3: On Displays for 5 seconds, then constantly Off		Excellent signal strength • Good signal margin for reliable communication.
	LED1: Off LED2: On LED3: On Displays for 5 seconds, then constantly Off		Satisfactory signal strength • Adequate signal strength for reliable communication. • Moving sensor or receiver may improve signal strength. • Increased channel switching may reduce battery life.
	LED1: Off LED2: Off LED3: On Displays for 5 seconds, then constantly Off		Poor signal strength • Unreliable communication. • Strongly recommend moving the sensor or receiver to a better location.

Table 48. Observing signal strength on the receiver (wireless controls)

User action	LED state (receiver, all models)	Indicates...
None	LED1: Off LED2: Off LED3: Off	Normal state • No Test button press.
Press Test button on the sensor	LED1: On LED2: On LED3: On Displays for 5 seconds, then constantly Off	Excellent signal strength • Good signal margin for reliable communication.
	LED1: Off LED2: On LED3: On Displays for 5 seconds, then constantly Off	Satisfactory signal strength • Adequate signal strength for reliable communication. • Moving sensor or receiver may improve signal strength. • Increased channel switching may reduce battery life.
	LED1: Off LED2: Off LED3: On Displays for 5 seconds, then constantly Off	Poor signal strength • Unreliable communication • Strongly recommend moving the sensor or receiver to a better location

Testing Battery Status (Wireless Controls)

Initiate a battery status test as follows:

- On model WZS, push the Test button on the sensor (see location on Figure 43, p. 117). LED5 on the sensor responds by indicating the level of battery strength, as

shown in Table 49, p. 119.

- On model WDS, push the Test button on the sensor (see location on Figure 43, p. 117). In response, a battery test symbol appears on the display. The symbol shown indicates battery life expectancy (see Table 50).

Table 49. Battery status: LED5 on model WZS sensors (wireless controls)

User action	LED state (WZS)	Indicates...
Press Test button	Solid green for 5 seconds	Battery is adequate for proper operation.
	Solid red for 5 seconds	25% battery life left. Batteries should be replaced.
	No light	Batteries life expired or not installed properly, or sensor is defective.
None	Blinking red: 1-blink pattern[(a)] repeated 5 times. Cycle repeats every 15 minutes.	Approximately 14 days of operation remain before the battery is too weak to power the sensor.

(a) Blink pattern is On for 1/4 s, Off for 3/4 s, with 2 s Off between repetitions.

Table 50. Battery status: Battery symbol on model WDS sensor display (wireless controls)

User action	Battery test symbol	Indicates...
Press Test button		Full battery power.
		50% battery life left.
		25% battery life left. Replace batteries. Flashing symbol indicates that approximately 14 days of operation remain before the battery is too weak to power the sensor.

24 V Power Status Indicator (Wireless Controls

LED5 on the receiver of all models (Figure 42, p. 117) lights and stays constantly On when 24 V power is normal.

Using the Wireless Sensor System to Check Signal Strength on a Site (Wireless Controls)

Follow these steps to check the signal strength on a site:

1. Power up a receiver with a 24 V transformer (user supplied)
2. Associate the sensor to a receiver of the same model intended for the job
3. Place the receiver at the desired location
4. Place or hold the sensor at the desired location
5. Press the Test button (S5) on the sensor and observe the signal strength as indicated by LED1, LED2, and LED3 on model WZS, and on the display on model WDS (Figure 43, p. 117).

For more information on interpreting the LEDs and the display symbols that indicate signal strength, see "Testing Signal Strength (Wireless Controls)," p. 118.

Replacing Sensor Batteries (Wireless Controls)

Sensor battery type, length of life, and installation are addressed in this section.

Battery Type (Wireless Controls)

NOTICE:

Equipment Damage!

The batteries are manufactured in a ready-to-use state. They are not designed for recharging. Recharging can cause battery leakage or, in some cases, can cause the safety release vent to open.

NOTICE:

Equipment Damage!

Do not attempt to hook up the sensor to a power supply. Equipment damage may result.

Use two non-rechargeable 1.5 V lithium AA batteries in the sensor. To maintain UL rating, use only UL-listed lithium batteries. The sensor ships with Energizer® L91 batteries already installed. Replacement batteries are available at Trane Service Parts Centers (p/n X13770035010) or other local suppliers.

Battery Life (Wireless Controls)

Battery life is five years under normal conditions. If the sensor is not used for an extended period of time, do one of the following:

- Set the sensor address to 000 to place the sensor into a low-power hibernation mode.
- Remove the batteries

Notes:

- *If lithium batteries are temporarily unavailable, alkaline batteries can be used. However, alkaline battery life is very short by comparison.*
- *The battery life for a model WDS may decrease with extended LCD display activity.*

Battery Installation (Wireless Controls)

⚠WARNING

Prevent Injury!

Batteries can explode or leak and cause burns if installed backwards, disassembled, charged, or exposed to water, fire, or high temperature.

⚠WARNING

Prevent Injury!

Keep away from small children. If swallowed, contact your local poison control center immediately.

6. Observe the polarity indicators that are molded into the cover.
7. Install two batteries (of the type specified in "Battery Type (Wireless Controls)," p. 119) in the battery-holding slot that is molded into the sensor cover.

The sensor has been designed to prevent damage if the batteries are installed backwards, to reduce the potential for injury.

Manual Association (Wireless Controls)

Before attempting manual or automatic association, the receiver must indicate readiness to associate (one blink pattern of LED3 on receiver). Refer to "Observing the Receiver for Readiness to Associate," p. 78.

At any time, the manual association method can be used to associate the receiver with the sensor. If an association was previously established between a receiver and a sensor and needs to be re-established, the manual association process may be used. If an association has not yet been established, the automatic association process is recommended (see "Associating the Sensor to the Receiver," p. 78).

8. Using a small screwdriver, set the three rotary address switches (Figure 33, p. 77, locations S1, S2, S3) on the receiver to an address between 001 and 999.

Notes:

- An address can be changed without powering down the receiver or sensor.
- An address can be changed at any time after initial association has been established.

9. Set the three rotary address switches (Figure 33, p. 77, locations S1, S2, S3) on the sensor to the same address as the receiver.
10. Record the address and location of the receiver and sensor pair.
    - After verifying that the receiver and sensor are powered up, press the Test button on the sensor to establish that the signal strength ("Testing Signal Strength (Wireless Controls)," p. 118) and the battery life "Testing Battery Status (Wireless Controls)," p. 118) are adequate for proper functioning.

Disassociation (Wireless Controls)

The receiver disassociates from the sensor (by removing all stored association information), conducts a channel scan, and restarts itself, if any of the following are true:

- The receiver address is changed from its current setting (001–999)
- The receiver receives a disassociation notification from its associated sensor
- The receiver does not receive a communication from its associated sensor within 50 minutes.
- The sensor and receiver are associated and communicating at the time the sensor is set to 000 and the Test button is pressed.

Note: *A disassociated sensor will transit an association request every 10 minutes.*

Sensor/Receiver Compatibility (Wireless Controls)

Version 1.5 (p/n X13790854 and X13790855) and higher receivers are compatible with all sensors models and support all functions. Receivers released prior to version 1.5 are compatible with only model WZS.

Replacing a Failed Sensor or Receiver (Wireless Controls)

Note: *Receivers ship installed on the unit. To remove the receiver, press in the retention tabs on the underside of the receiver enclosure (see Figure 32, p. 77) and push upward.*

To replace a failed sensor or receiver:

11. Confirm that the device is disassociated (see Table 45 and Table 46, p. 118).
12. Set the rotary address switch of the new device to match the address of the remaining sensor or receiver.

    Note: *There is no need to remove power from the remaining device.*

13. Apply power to the new device. Association between the new and the remaining devices will automatically occur.

Note: *When replacing a WDS sensor, the receiver (version 1.5 or higher) will automatically configure the sensor to match the last stored configuration, if the sensor has not been placed into configuration mode and the factory default configuration is still valid. If the sensor configuration does not match the desired system features, it can be manually configured (see "Manual Association (Wireless Controls)," p. 120).*

Servicing and Testing (Wireless Controls)

If the wireless sensor system is not working as expected, use the tools and procedure described in this section.

Servicing and Testing Tools (Wireless Controls)

No special tools or software are necessary to service and test the wireless sensor system. Test the system by using:

- The LEDs on the receiver, LEDs on the model WZS sensor, and the display on the model WDS sensor

- The Test button on the sensor
- The address test mode on the receiver
- A common volt-ohm meter

Procedure for Testing the Wireless Sensor System (Wireless Controls)

If the wireless sensor system is not working as expected:

1. Observe LED5 on the receiver. LED5 is On solid green whenever the receiver is powered.
2. Verify that the receiver is properly grounded. Both the GND-SIGNAL (black) wire and the GND-POWER (yellow) wire must be grounded.
3. Press the Test button on the sensor.
   - Model WZS: LED5 should turn On solid green, indicating proper battery strength. LED1, LED2, and LED3 will indicate signal strength.

     Note: *When checking signal strength, both LED1 and LED3 on the receiver and sensor illuminate in unison if the sensor and receiver are associated. Use this feature to confirm association.*
   - Model WDS: Battery life ("Testing Battery Status (Wireless Controls)," p. 118) and signal strength ("Testing Signal Strength (Wireless Controls)," p. 118) are indicated on the display.

Procedure for Testing the Receiver (Wireless Controls)

If the receiver is not working as expected:

1. Verify that the receiver is powered.
2. Set the receiver address to 000 to force the zone temperature output and zone temperature setpoint output to their default mode values (see "Output Values—Failure and Default Modes of Operation (Wireless Controls)," p. 121).
3. Measure the receiver output resistance (see "Measuring Output Resistance (Wireless Controls)," p. 121).
4. When the test is complete, reset the receiver address to its previous setting.
5. Press the Test button on the sensor to force re-association.
6. Confirm association and communication by noting LED1, LED2, and LED3 as described in "Testing Signal Strength (Wireless Controls)," p. 118.

Forcing a Sensor to Transmit (Wireless Controls)

To force a wireless sensor to transmit during servicing, press the Test button on the sensor.

Output Power Level (Wireless Controls)

The maximum output power level of a wireless sensor set is controlled by software and restricted by channel of operation and agency requirements per country or region. The sensor has a default maximum power level of 10 mW, but the receiver determines the ultimate output power level of the sensor.

Output Values—Failure and Default Modes of Operation (Wireless Controls)

The following table provides output values for failure and default modes of operation, which can be used for troubleshooting.

Table 51. Output values

Situation	Zone temperature output	Zone setpoint output	Heating setpoint output	Fan/ System output
Receiver address = 000	11.17 kΩ, 72.5°F (22.5°C), indefinitely	451 Ω, 72.5°F (22.5°C), indefinitely	501 Ω, 70.5°F (21.4°C), indefinitely	2320 Ω Fan = Auto System = Off
Receiver address = 001 to 999 and: Receiver is powered up, but not is associated, or Receiver has received a disassociation request from the associated sensor.	11.17 kΩ, 72.5°F (22.5°C) Hold for 15 minutes, then open	451 Ω, 72.5°F (22.5°C), Hold for 15 minutes, then open	501 Ω, 70.5°F (21.4°C), indefinitely	2320 Ω Fan = Auto System = Off
Receiver address = 001 to 999 and receiver has not received a communication within 35 minutes from the associated sensor.	Open	Open	Open	Open
Receiver has no power.	Open	Open	Open	Open
Thermistor in sensor has failed to either open or close.	Open	Normal value	Normal value	N/A
Setpoint potentiometer has failed to either open or close.	Normal value	Open	Open	N/A

Measuring Output Resistance (Wireless Controls)

To measure the resistance of receiver outputs for zone temperature and setpoints for all models, and heating setpoint and fan/system for the WDS:

1. Ensure that the GND-SIGNAL (black) wire and the GND-POWER (yellow) wire are grounded to the transformer.
2. Disconnect the ZONE (white) and SETPOINT (RED) wires from the controller. Disconnect the HEAT SETPOINT (brown) and FAN/SYSTEM (green) wires from the controller, if applicable.
3. Measure resistance as follows:
   a. All models: Measure between the grounded GND-SIGNAL (black) wire and either the SETPOINT (red) or ZONE (white) wire. Compare resistance measurements to those in Table 52, p. 122.
   b. WDS only: Measure between the grounded GND-SIGNAL (black) wire and the FAN/SYSTEM (green) wire. Compare resistance measurements to those

given in Table 53, p. 122.

Note: *The output circuits are not electrically powered; consequently, resistance can be measured without risk of damage to the volt-ohm meter.*

Table 52. Receiver resistance table for all models (wireless controls)

Zone or setpoint temperature	Nominal zone temperature output resistance	Nominal setpoint and heating setpoint output resistance
55°F (12.8°C)	17.47 kΩ	792 Ω
60°F (15.6°C)	15.3 kΩ	695 Ω
65°F (18.3°C)	13.49 kΩ	597 Ω
70°F (21.1°C)	11.9 kΩ	500 Ω
75°F (23.9°C)	10.5 kΩ	403 Ω
80°F (26.7°C	9.3 kΩ	305 Ω
85°F (29.4°C)	8.25 kΩ	208 Ω

Table 53. Receiver resistance table for model WDS (wireless controls)

Fan command	Nominal output resistance
High	16,130 Ω
Med	13,320 Ω
Low	10,770 Ω
Auto	2320 Ω
Off	4870 Ω

Cleaning the Sensor (Wireless Controls)

NOTICE:

Equipment Damage!

Spraying glass cleaner or any other solution directly on the sensor may damage it.

You can clean the sensor by applying glass cleaner to a soft, non-abrasive cloth, and gently wiping the face, including the buttons and LCD display. Use of a pre-moistened towelette designed for lens or screen cleaning is also acceptable.

Avoid inadvertent pressing of the Occupied/Unoccupied buttons on the keypad on the WDS sensor as this may result in an unwanted timed override or settings change.

Troubleshooting (Tracer ZN520)

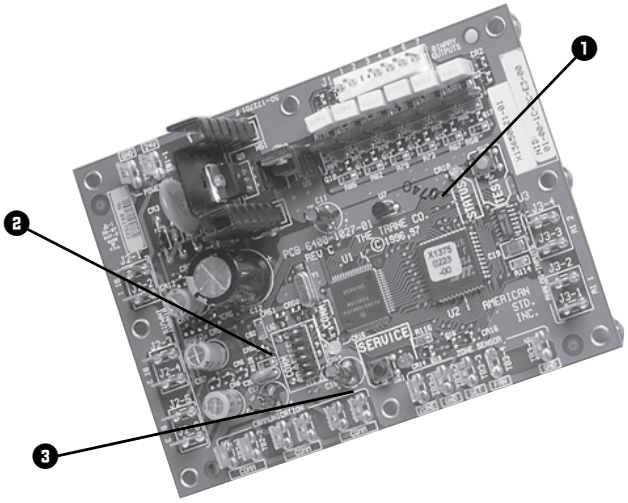

1. **Green STATUS LED**
   Indicates Whether the Controller is Powered On (24 Vac Supplied)
2. **Yellow COMM LED**
   Indicates if Communication is Functioning
3. **Red SERVICE LED**
   Indicates if Service is Needed

Red SERVICE LED (Tracer ZN520)

During normal operation, the LED is off continuously when power is applied to the controller.

If the LED is on continuously, even when power is applied to the controller means that someone is pressing the SERVICE button or that the controller has failed.

If the LED flashes once every second, use Rover, Trane's service tool, to restore the unit to normal operation. Refer to the Rover product literature for more information.

Note: *If the Service button is held down for more than 15 seconds on the Tracer ZN520 controller, it will uninstall itself from the ICS communication network and shut down all unit operation.*

Green STATUS LED (Tracer ZN520)

During normal operation, the LED is on continuously.

If the LED blinks once, the controller is in Manual output test mode.

If the LED blinks twice the controller is in Manual output test mode, with one or more diagnostics present.

If the LED blinks (1/4 second on, 1/4 second off for 10 seconds) the controller is in the "Wink" mode.

Note: *The "wink" feature allows the identification of a particular controller. When sending a request from a device, such as Rover, the controller will "wink" to indicate it received the signal.*

If the LED is off, either the power is off, an abnormal condition is present or the TEST button is pressed.

Yellow COMM LED (Tracer ZN520)

If the LED is off continuously, the controller is not detecting any communication. This is normal for units in standalone applications.

If the LED blinks, the controller detects communication.

If the LED is on continuously, this indicates an abnormal condition.

Manual Output Test (Tracer ZN520)

The purpose of the manual output test sequence is to verify output and end device operation. Use the manual output test to:

- Verify output wiring and operation without using Rover, service tool
- Force the water valve to open and balance the hydronic system

Note: *The manual output test is not an automatic cycle. You must press the TEST button to proceed through each step.*

The controller observes all diagnostics that occur during the test sequence. Although an automatic diagnostic reset sequence exists as part of the controller's normal operation, the automatic diagnostic reset feature is not active during the test sequence.

If left in an individual test step, the controller remains in test mode for 60 minutes and then exits to normal operation.

Many service calls are due to unit diagnostics. The test sequence resets unit diagnostics and attempts to restore normal unit operation prior to testing the outputs. If the diagnostics remain after a reset, the STATUS LED indicates the diagnostic condition is still present (two blinks).

Manual Output Test Procedure (Tracer ZN010, ZN510, and ZN520)

Follow the procedure below to test the Tracer ZN010, ZN510, and ZN520 controllers.

1. Press and hold the TEST button for at least two seconds (not exceeding 5 seconds), and then release, to start the test mode.
2. The test sequence will turn off all outputs and then attempt to clear all diagnostics.
3. Press the TEST button several more times (no more than once per second) to advance through the test sequence.

The outputs are not subject to minimum times during the test sequence. However, the test sequence only permits one step per second which limits minimum output time.

The green LED is turned off when the TEST button is pressed. To begin the manual output test mode, press and hold the TEST button (turning off the green LED) for at least two seconds.The green LED will begin to blink, indicating the controller is in test mode.

Table 54. Test sequence for 1-heat/1-cool configurations (Tracer ZN010, ZN510, and ZN520)

Steps	Fan BOP1-3	Cool Output BOP4[a]	Heat Output BOP5	Damper BOP6
1. Off	Off	Off	Off	Closed
2. Fan High	High	Off	Off	Closed
3. Fan Medium	Medium	Off	Off	Closed
4. Fan Low	Low	Off	Off	Closed
5. Cool	High	On	Off	Closed
6. Heat	High	Off	On	Closed
7. Fresh Air Damper[b]	High	Off	Off	Open
8. Exit	[c]			

Note: For all 1-heat/1-cool applications including 2-pipe changeover, BOP4 energizes in the cooling test stage and BOP5 energizes in the heat test stage.This occurs even though during normal 2-pipe changeover operation BOP4 controls the unit valve for both cooling and heating.

(a) At the beginning of the Fan High step, the controller attempts to clear all diagnostics.
(b) The fresh air damper (BOP6) only energizes during this step if binary output 6 has been configured as a fresh air damper.
(c) After the Fresh Air Damper step, the test sequence performs the Exit step.This initiates a reset and attempts to return the controller to normal operation.

Troubleshooting (UC400)

Table 55 through Table 60, p. 125 provide troubleshooting information if encountering operational problems with the UC400 controller.

Table 55. Fan does not energize (UC400)

Probable Cause	Explanation
Unit wiring	The wiring between the controller outputs and the fan relays and contacts must be present and correct for normal fan operation. Refer to applicable wiring diagram.
Failed end device	The fan motor and relay must be checked to ensure proper operation.
Normal operation	The fan will turn **OFF** when: • The controller receives a communicated off signal • The fan-speed switch is set to **OFF** if no communicated value is present • Specific diagnostics are generated • The default fan speed is set to **OFF** and the fan is operating in the Auto mode. If the controller is in unoccupied mode, the fan cycles between **OFF** and the highest fan speed.
No power to the controller	If the controller does not have power, the unit fan does not operate. For the controller to operate normally, it must have an input voltage of 24 Vac. If the Marquee/Power LED is **OFF** continuously, the controller does not have sufficient power or has failed.
Diagnostic present	Several diagnostics affect fan operation. For detailed information about these diagnostics, refer to Table 44, p. 116.
Unit configuration	The controller must be properly configured based on the actual installed end devices and application. If the unit configuration does not match the actual end device, the fans may not work correctly.
Random start observed	After power-up, the controller always observes a random start from 5 to 30 seconds. The controller remains **OFF** until the random start time expires.
Cycling fan operation/ continuous	The controller continuously operates the fan when in the occupied, occupied standby, or occupied bypass mode. When the controller is in the unoccupied mode, the fan is cycled between high speed and **OFF** with capacity.
Unoccupied operation	Even if the controller is configured for continuous fan operation, the fan normally cycles with capacity during unoccupied mode. While unoccupied, the fan cycles **ON** or **OFF** with heating/cooling to provide varying amounts of heating or cooling to the space.
Fan mode off	If a local fan mode switch determines the fan operation, the **OFF** position controls the fan to off.
Requested mode off	The user can communicate a desired operating mode (*such as **OFF**, heat, and cool*) to the controller. If **OFF** is communicated to the controller, the unit controls the fan to off. There is no heating or cooling.

Table 56. Valves remain closed (UC400)

Probable Cause	Explanation
Unit wiring	The wiring between the controller outputs and the valve(s) must be present and correct for normal valve operation. Refer to applicable wiring diagram.
Failed end device	The valves must be checked to ensure proper operation.
No power to the controller	If the controller does not have power, the unit valve(s) will not operate. For the controller to operate normally, apply an input voltage of 24 Vac. If the Marquee/Power LED is **OFF** continuously, the controller does not have sufficient power or has failed.
Diagnostic present	Several diagnostics affect valve operation. For detailed information about these diagnostics, refer to Table 44, p. 116.

Table 56. Valves remain closed (UC400) (continued)

Probable Cause	Explanation
Normal operation	The controller opens and closes the valves to meet the unit capacity requirements.
Unit configuration	The controller must be properly configured based on the actual installed end devices and application. If the unit configuration does not match the actual end device, the valves may not work correctly.
Random start observed	After power-up, the controller always observes a random start from 5 to 30 seconds. The controller remains **OFF** until the random start time expires.
Requested mode off	The user can communicate a desired operating mode (such as **OFF**, heat, and cool) to the controller. If **OFF** is communicated to the controller, the unit controls the fan to off. There is no heating or cooling.
Entering water temperature sampling logic	The controller includes entering water temperature sampling logic, which is automatically initiated during 2-pipe and 4-pipe changeover, if the entering water temperature is either too cool or too hot for the desired heating or cooling.
Valve configuration	Ensure the valves are correctly configured, using the Tracer TU service tool, as normally open or normally closed as dictated by the application.

Table 57. Valves remain open (UC400)

Probable Cause	Explanation
Unit wiring	The wiring between the controller outputs and the valve(s) must be present and correct for normal valve operation. Refer to applicable wiring diagram.
Failed end device	The valves must be checked to ensure proper operations.
Normal operation	The controller opens and closes the valves to meet the unit capacity requirements.
Diagnostic present	Several diagnostics affect valve operation. For detailed information about these diagnostics, refer to Table 44, p. 116.
Unit configuration	The controller must be properly configured based on the actual installed end devices and application. If the unit configuration does not match the actual end device, the valves may not work correctly.
Entering water temperature sampling logic	The controller includes entering water temperature sampling logic, which is automatically initiated during 2-pipe and 4-pipe changeover, if the entering water temperature is either too cool or too hot for the desired heating or cooling.
Valve configuration	Ensure the valves are correctly configured, using the Tracer TU service tool, as normally open (NO) or normally closed (NC) as dictated by the application.
Freeze avoidance	When the fan is **OFF** with no demand for capacity (0%), and the outdoor air temperature is below the freeze avoidance setpoint, the controller opens the water valves (100%) to prevent coil freezing. This includes unoccupied mode when there is no call for capacity or any other time the fan is **OFF**.

Table 58. DX or electric heat does not energize (UC400)

Probable Cause	Explanation
Unit wiring	The wiring between the controller outputs and the end devices must be present and correct for normal operation. Refer to applicable wiring diagram.
Failed end device	Check the control contactors or the electric heat element, including any auxiliary safety interlocks, to ensure proper operation.
No power to the controller	If the controller does not have power, heat outputs do not operate. For the controller to operate normally, apply an input voltage of 24 Vac. If the Marquee/Power LED is **OFF** continuously, the controller does not have sufficient power or has failed.
Diagnostic present	Several diagnostics affect DX and electric heat operation. For detailed information about these diagnostics, refer to Table 44, p. 116.
Normal operation	The controller controls compressor or electric heat outputs as needed to meet the unit capacity requirements.
Unit configuration	The controller must be properly configured based on the actual installed end devices and application. If the unit configuration does not match the actual end device, DX or electric heat may not operate correctly.
Requested mode off	The user can communicate a desired operating mode (such as **OFF**, heat, and cool) to the controller. If **OFF** is communicated to the controller, the unit shuts off the compressor or electric heat.
Freeze avoidance	When the fan is **OFF** with no demand for capacity (0%), and the outdoor air temperature is below the freeze avoidance setpoint, the controller disables compressors and electric heat outputs (100%) to prevent coil freezing. This includes unoccupied mode when there is no call for capacity or any other time the fan is **OFF**.

Table 59. Outdoor air damper remains closed (UC400)

Probable Cause	Explanation
Unit wiring	The wiring between the controller outputs and the outdoor air damper must be present and correct for normal outdoor air damper operation. Refer to applicable wiring diagram.
Failed end device	Check damper actuator to ensure proper operation.
No power to the controller	If the controller does not have power, the outdoor air damper does not operate. For the controller to operate normally, apply an input voltage of 24 Vac. If the Marquee/Power LED is **OFF** continuously, the controller does not have sufficient power or has failed.
Diagnostic present	Several diagnostics affect outdoor air damper operation. For detailed information about these diagnostics, refer to Table 44, p. 116.
Normal operation	The controller opens and closes the outdoor air damper based on the controller's occupancy mode and fan status. Normally, the outdoor air damper is open during occupied mode when the fan is running and closed during unoccupied mode.
Unit configuration	The controller must be properly configured based on the actual installed end devices and application. If the unit configuration does not match the actual end device, the outdoor air damper may not work correctly.
Warm-up and cool-down sequence	The controller includes both a morning warm-up and cool-down sequence to keep the outdoor air damper closed during the transition from unoccupied to occupied. This is an attempt to bring the space under control as quickly as possible.
Requested mode off	The user can communicate a desired operating mode (such as **OFF**, heat, or cool) to the controller. If **OFF** is communicated to the controller, the unit closes the outdoor air damper.

Table 60. Outdoor air damper remains open

Probable Cause	Explanation
Unit wiring	The wiring between the controller outputs and the outdoor air damper must be present and correct for normal outdoor air damper operation. Refer to applicable wiring diagram.
Failed end device	Check damper actuator to ensure proper operation.
Normal operation	The controller opens and closes the outdoor air damper based on the controller occupancy mode and fan status. Normally, the outdoor air damper is open during occupied mode when the fan is running and closed during unoccupied mode. (Refer to the section, "Modulating Outdoor/Return Air Damper (UC400)," p. 102.)
Unit configuration	The controller must be properly configured based on the actual installed end devices and application. If the unit configuration does not match the actual end device, the outdoor air damper may not work correctly.

Troubleshooting (ECM)

⚠WARNING

Hazardous Voltage w/Capacitors!

Disconnect all electric power, including remote disconnects and discharge all motor start/run capacitors before servicing. Follow proper lockout/tagout procedures to ensure the power cannot be inadvertently energized. For variable frequency drives or other energy storing components provided by Trane or others, refer to the appropriate manufacturer's literature for allowable waiting periods for discharge of capacitors. Verify with an appropriate voltmeter that all capacitors have discharged. Failure to disconnect power and discharge capacitors before servicing could result in death or serious injury.

⚠WARNING

Safety Alert!

You MUST follow all recommendations below. Failure to do so could result in death or serious injury.

- **The BLDC motors contain capacitors which store residual energy. Please keep clear of the fan wheels for 5 minutes after the power has been removed from the system, as a power request with the motor powered off, could result in a very short period of actuation. Unplugging the motor is adequate to ensure that there will be no power request.**
- **The adapter boards contain high voltage. Configuration adjustments to the ECM engine board should be made through the SMALLER of the two low-voltage lids on the front of the control panel, through the low-voltage insulation/shielding.**
- **Initial hookups to the CSTI and standard adapter boards, including low voltage interconnections, must be made with the power off.**
- **Do not make connections to the motors or the adapter boards while power is ON. Do not remove connections to the motor or the adapter boards while the power is ON.**

Notes:

- *The new Trane BLDC system is a closed loop system that has equipment protections and envelope enforcements. Do not assume that the motor has failed without first consulting the ECM engine status/diagnostics screen. In many cases, the engine shuts down the motor operation and locks it out to prevent equipment damage.*
- *Electric Heat operation and Changeover Coil control on CSTI units are co-coordinated by the ECM engine board. Changeover function on Tracer ZN units can also be affected by incorrect configuration of the ECM engine or improper wiring of terminals to analog input 1 on the Tracer ZN controller (polarity sensitivity).*
- *The mini-access lid on the front of the main control panel lid has the ECM engine troubleshooting/setup guide affixed to the back of the lid. This guide is unit-specific and should be consulted before determining the disposition of a unit.*

General Information (ECM)

The ECM engine oversees and monitors all motor operations and changes to speed resulting from:

- Direct Fan Speed Requests
  - Customer Fan Speed Switches
  - Thermostat Fan Speed, On or 0–10V requests
  - Automatic Fan Request from Tracer ZN / UC controllers
- Indirect Fan Speed Requests
  - Electric Heat requests will bring the fan to the proper speed.
- Conflicting Fan Speed Requests
  - If two or more commands are received (direct or indirect), the fan will honor the higher speed requested.

Note: *In some cases, indirect requests will result in fan behavior change regardless of whether the end-device fails to actuate (due to device failure, or safety/down-stream lockouts).*

The ECM engine board also coordinates the operation of Electric Heat, Electric/Hydronic Heat lockouts, and CSTI Changeover coil operation.

Troubleshooting Information (ECM)

General system troubleshooting tips (ECM)

- ECM engine configuration must perfectly match the factory-supplied ECM.
  - Refer to "ECM Overview and Setup," p. 53 for troubleshooting configuration of the engine board.
- The ECM engine will display troubleshooting information, and contains dual tachometers to aid in performance verification.
- Under normal circumstances, the ECM engine display will display the operational status of the motors and electric heat circuit/sensors, however, a malfunction will drive a priority display mode that will present the error code instantly to the screen. The error must be cleared by solving by powering down, removing the cause of the problem and restarting the engine board.
- Engine Label setup document (affixed to the back of the low voltage access lid) should be used to verify engine configuration settings.
- For proper operation of the system, all plugs must be firmly seated in all boards and motors. Insecure

connections will cause malfunction and the system will shutdown.

- Do not unplug or plug-in motors or connectors while the system is receiving a speed request of any kind. The system must be powered down before plugging or un-plugging connections to the adapter boards, engine boards or motors. Failure do so will register diagnostics or cause unsafe operation and reduction in the contact life of the connectors.
- The motor will not spin if plugged in while the ECM engine is requesting power.

Troubleshooting a motor that does not spin, or spins too slowly (ECM)

The motor connections and motor plug connections to the adapter boards should be secure. Unit should be powered off to check the fit of the connectors.

When configured correctly, the system will always respond positively to direct, indirect, and conflicting speed requests with very few exceptions:

These exceptions are:

1. If a motor has been locked out due to engine locked rotor protection:
   - Assuming Motor 1 has an obstruction. In this case, the "Status Display" will be interrupted to display:

     LOCH → mtr 1 → LrPt

     Solution:

     i. Remove obstruction from the fan wheel.

     ii. Ensure that motor plugs and all plugs to adapter boards and the ECM engine board are secure

     iii. Verify that the configuration does not specify a motor that is physically missing. Most units require only one motor. The controller is made aware of the missing motor by specifying all speeds related to Motor 2 to 0 rpm.

     iv. Verify that m1Lo and m2Lo, the low motor signal output limits, are set correctly.
2. If a motor has been locked out due to overspeed or runaway condition:
   - Assuming Motor 1 has an overspeed condition. In this case, the "Status Display" will be interrupted to display:

     OSPd → mtr 1 → OSPd

     Solution:

     i. Ensure that set-screw is attached firmly to the motor shaft.

     ii. Ensure that motor plugs and all plugs to adapter boards and the ECM engine board are secure.

     iii. Verify that the configuration does not specify a speed lower than 450 rpm for the affected motor. Speeds below 450 rpm are not supported on fan-coil units.
3. VSP Inputs (0–10V inputs) are of the wrong polarity
   - Verify that variable speed (VSP) inputs are properly wired to 1TB4.

   Notes:

   - *Do not short the courtesy 10 Vdc supply to chassis or loads that require greater than 10 mA of DC current.*
   - *Please observe proper polarity of 0–10 Vdc inputs. Failure to observe proper polarity can cause failure of the ECM engine board, the customer-supplied controller or the Tracer ZN controller.*
4. Customer Controller output signal to VSP Inputs are too low.

   Note: *If the customer supplied controller outputs signals that are below the noise threshold, they will be ignored by the ECM Engine.*

   - The ECM Engine board contains an adjustable noise floor parameter, uFLr that can be configured to reject signals below the noise floor.
   - If the noise floor parameter is set too high, it can be lowered as long as there are acceptable noise levels on the inputs lines.

Troubleshooting a motor that spins too fast, or spins without any apparent speed request (ECM)

Typical equipment and controls design practice will ensure that the fans will come on if there is a call for heat, cool, or ventilation. In most cases, we will depend on the controller/thermostat to call for the fan to come on when appropriate, but during calls for electric heat, or calls for heat on CSTI units equipped with electric heat, as a call for the appropriate fan speed. This behavior, as described previously, is an indirect request.

When a call for electric heat is made, the system will positively drive the fan on to the correct speed, regardless of whether the controller has asked for fan operation or not. The unit design incorporates an interlock instead of a lock-out. (It does not lock out electric heat if the fan is set to off; it brings the fan on.)

Notes:

- *In many cases, indirect requests will result in fan behavior change regardless of whether the end-device fails to actuate (due to device failure, or safety/down-stream lockouts). If there is hot water available on CSTI units with changeover coils and electric heat, we will still drive the fan to the appropriate electric heat speed.*
- *The new fan coil designs incorporate sophisticated fan interlocks that will lockout heat if there is a fan failure.*

If the preceding conditions do not describe the behavior of the unit, the following checks should be performed:

- Verify that the voltage jumper on the motor plug harness is absent for 208-230V units and 277V units. If the jumper is present for these units, the motor electronics will be damaged, and the motor will not be controllable.
- Verify that the fan speed request is not below 450 rpm. Speeds below 450 rpm are not supported on the fan-coil product.
- Verify that the all binary inputs to the customer terminal blocks are of proper and consistent polarity.
  - For CSTI units, the fan inputs and end device inputs on TB3 must receive signals that are 24 Vac with respect to the unit chassis.

    Note: *Do not short 24 Vac (pos 1 or pos 2) to chassis; refer to the unit schematic.*
  - For Fan Speed Switch units, that incorporate the Tracer ZN/CSTI adapter board, all inputs to TB3 must be 24 Vac with respect to unit chassis.

    Note: *Do not short 24 Vac (pos 1 or pos 2) to chassis; refer to the unit schematic.*
  - For Tracer ZN units, where there is a desire to use parallel fan inputs on the adapter board TB3 strip, the inputs must be COM (i.e., the inputs will honor only 0 V with respect to unit chassis).

    Note: *Do not short 24 Vac (pos 1 or pos 2) to chassis; refer to the unit schematic.*
- Verify that variable speed (VSP) inputs are properly wired to 1TB4.

  Notes:
  - *Do not short the courtesy 10 Vdc supply to chassis or loads that require greater than 10 mA of DC current.*
  - *Please observe proper polarity of 0–10 Vdc inputs. Failure to observe proper polarity can cause failure of the ECM Engine board, the customer-supplied controller or the Tracer ZN controller.*
- Verify that the signal on the VSP inputs is noise free. The ECM engine board contains an adjustable noise floor parameter, uFLr, that can be configured to reject signals below the noise floor.

  Note: *If the customer supplied controller outputs signals that are below the noise threshold, they will be ignored by the ECM engine.*
- Verify that VSP input settings are correct. The ECM engine board contains an adjustable digital amplifier, A iSc, to compensate for long 10 Vdc cable runs. For normalized (0–10 Vdc) signals, this setting should be set to 1.000. If it is set too high, the motors will faster than the requested ratio, and will hit the limit AhT1 before the input voltage has reached its upper limit.
- Verify that T1LO and T2LO, the low motor signal output limits, are set correctly.

Replacing ECM Components

⚠WARNING

Hazardous Voltage w/Capacitors!

Disconnect all electric power, including remote disconnects and discharge all motor start/run capacitors before servicing. Follow proper lockout/tagout procedures to ensure the power cannot be inadvertently energized. For variable frequency drives or other energy storing components provided by Trane or others, refer to the appropriate manufacturer's literature for allowable waiting periods for discharge of capacitors. Verify with an appropriate voltmeter that all capacitors have discharged. Failure to disconnect power and discharge capacitors before servicing could result in death or serious injury.

⚠WARNING

Safety Alert!

You MUST follow all recommendations below. Failure to do so could result in death or serious injury.

- **The BLDC motors contain capacitors which store residual energy. Please keep clear of the fan wheels for 5 minutes after the power has been removed from the system, as a power request with the motor powered off, could result in a very short period of actuation. Unplugging the motor is adequate to ensure that there will be no power request.**
- **The adapter boards contain high voltage. Configuration adjustments to the ECM engine board should be made through the SMALLER of the two low-voltage lids on the front of the control panel, through the low-voltage insulation/shielding.**
- **Initial hookups to the CSTI and standard adapter board, including low voltage interconnections, must be made with the power off.**
- **Do not make connections to the motors or the adapter boards while power is ON. Do not remove connections to the motor or the adapter boards while the power is ON.**
- **Caution should be taken to stay clear of hazardous voltages, moving parts and electric heat elements while making adjustments to the ECM engine board. If it is not practical to stay clear of these areas during adjustment of the ECM engine board, please contact Trane Global Parts for configuration kit that allows easy powering of the engine board outside of the unit with a 9V battery.**
- **For safe operation, it is necessary to configure replacement boards to match the setup/switch configuration of the previously installed boards.**
- **Ensure that new circuit modules are firmly seated on the nylon standoffs, and that the nylon standoffs are firmly seated on the metal panel.**

NOTICE:

Equipment Damage!

The motor harness attached to the single plug to which the motor mates contains the very important 115V motor voltage jumper; the motor harness should always be present for 115V units and should not be modified or substituted. Failure to follow this instruction could result in equipment damage.

Notes:

- *Ensure that drip-loops are maintained on wiring on pipe end of unit to avoid wicking of water into the unit.*

- *Before assuming that any of the boards or components in the new system have failed, please ensure that the ECM engine board has been configured correctly and that the switches on the CSTI board (where applicable) are set correctly.*
- *It is necessary to configure the service replacement ECM engine board before commissioning the unit. The ECM engine board is pre-configured with safe values, but will NOT work correctly unless properly configured.*
- *Only genuine Trane® replacement components with identical Trane part numbers should be used.*
- *Unit fan assemblies contain concealed wires that should be removed before the fan-board is removed, to avoid nicking the wire.*
- *Care should be maintained to retain the order of the motors with respect to the motor plugs. On a unit with two motors, the double-shafted motor will always be to the left side, and will be designated as Motor 2 by the controller.*

Tips:

- *Ensure that motor nameplate voltage is the same as unit voltage (for 3-phase/ 4-wire units with Neutral, motor voltage will be L-N, not L1-L2).*
- *Ensure that motor harness is correct (harness will have jumper installed for 115V units only).*
- *Ensure that configuration on ECM Engine matches the affixed label.*
- *Maintain correct plug/motor association. The plugs will have the motor number and shaft configuration printed on an affixed label.*
- *Ensure that configuration of switches on CSTI adapter board matches depiction of switches on the unit schematic.*
- *Ensure that all wires are plugged in securely.*
- *Ensure that edge protection on sharp edges, grommets, and wire management devices are maintained when replacing components.*
- *Ensure that blunt-tip screws are used when in the proximity of wire harnesses.*

Circuit Modules Replacement Notes/Work Instructions

1. Circuit modules are equipped with nylon standoffs which can either be removed by squeezing the barbs at the rear of the control panel, or squeezing the latch above the circuit module. If the latter method is chosen, the standoffs will be retained on the metal panel. The new standoffs (affixed to the replacement modules) can be removed if necessary, so the new module circuit board can be attached to the retained standoffs.

Figure 44.

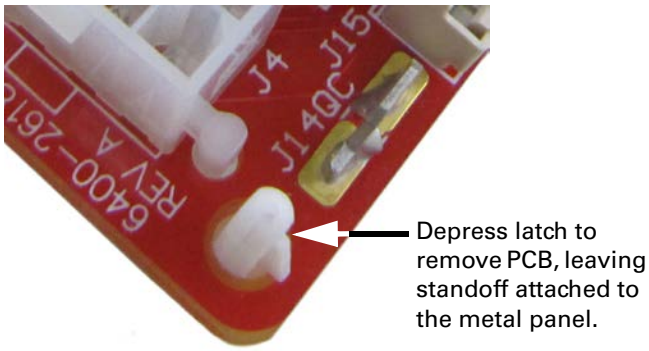

2. If replacing the ECM engine module, special care should be taken to avoid electro-static discharge damage. Please use an ESD protection wrist-strap and frequently touch a grounded surface (with unit power off) to discharge any static buildup.
3. Replace connectors carefully onto the appropriate board. For units with a green wire attached to the CSTI or standard adapter boards, please **ensure that the green wire is attached to the engine board white connector** as shown in Figure 45.

Figure 45.

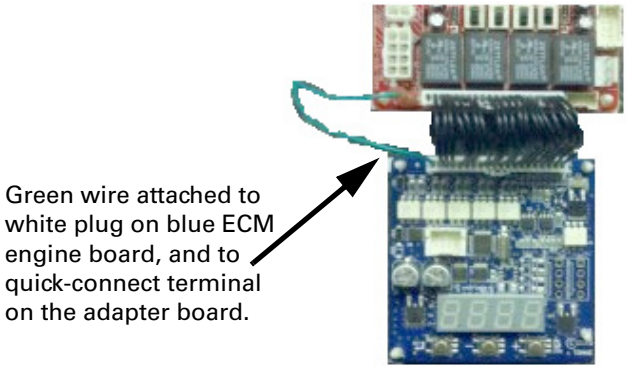

4. Ensure that the new ECM engine controller is configured to match the ECM engine configuration label that is present on the unit. It is necessary to configure the ECM engine board to avoid improper operation of the unit, discomfort to the end user, and loud fan operation.

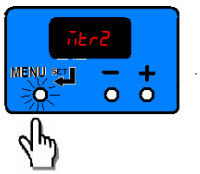

5. Ensure that the CSTI adapter board switches are set correctly, as indicated on the attached unit schematic (where applicable).

Figure 46.

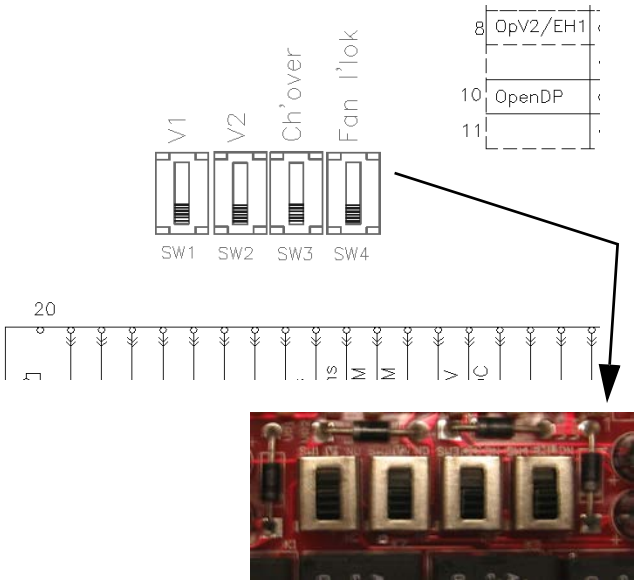

6. After replacing modules, commission the unit by performing at a minimum, "Fan Speed Response Verification," p. 72.

ECM Application Notes

The new Trane BLDC system has some notable differences to traditional designs.

RPM Mode

The motors are programmed from the factory to run in rpm mode and will not change rpm based on external static pressure, except at the performance limits of the motor/controller. For ducted units, the units are shipped with the rpm set for 0.2" ESP for High, Medium, and Low speeds. The speeds can for high, medium, and low operation, but should not be changed for the electric heat actuation speeds.

Generally, the fans deliver less cfm for the same rpm, if the static is increased and the power will decrease. The fan will deliver more cfm for the same rpm, if the static is decreased and the fan power will increase. A unit with high static configuration should not be used to free-deliver air (i.e., with no ducting attached).

Field Power Wiring

Note: *This product uses an electronic variable speed motor control, which includes a line reactor to minimize power line harmonic currents. It is recommended that good wiring practices be followed to manage building electrical power system harmonic voltages and currents to avoid electrical system problems or other equipment interaction.*

Performance Boundaries

While the speeds of the fan motors can be adjusted, never program a fan speed higher than 1700 rpm, or lower than 450 rpm. In many cases, units configured for high-static operation will not achieve the desired rpm if the ESP of the unit is too low, or the unit is allowed to "free-discharge." The ECM engine contains settings that will limit the output power of the motor under these overload conditions. If the motors cannot achieve rpm close to the target for a specific period of time, the unit will disable electric heat and fan-status indicators.

MCA/MFS and Power Draw

The Trane BLDC motors have variable output but are shipped at specific settings to deliver proper performance and reliability. The power draw indicated in the catalogue indicates the power consumed when applied properly (as shipped and with the nominal ESP applied). However, the nameplate of the unit indicates the maximum input draw of the motor, as the motor settings can be changed to draw more power.

Electric Heat Relays

For quiet operation, the new BLDC units employ power relays instead of definite purpose contactors for electric heat actuation. The coils of multiple relays are hooked in parallel to simulate a multi-pole contactor, as shown in Figure 47. In Figure 47, two sets of three relays are used to perform the function of a two 3-pole contactors.

Figure 47. Sample arrangement: electric heat relay

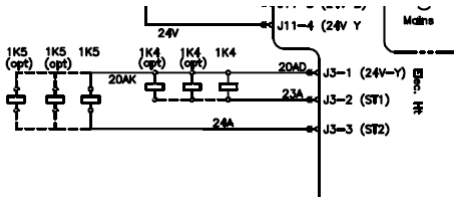

Troubleshooting Other Unit Functions

In some cases, the normal or abnormal operation of the BLDC system may interact with other components in the system. Generally, verification of the engine and adapter boards' wiring and configuration should be checked if there are unexplained abnormalities in other areas of the unit:

1. Valve operation
2. Electric Heat operation
3. Changeover sensor operation
4. Damper operation
5. Condensate overflow switch

A high degree of protection is provided on electric heat units. If electric heat fails to actuate, it may be because of one of the following events:

1. Fans are failing to meet target speed. If a second motor is not present, all settings for speeds for Motor 2 should be set to 0000.
2. Hot water may be available in the changeover coil.
3. The connection to analogue input 1 on the Tracer ZN controller may be reversed in polarity.
4. Target speeds for motors may be set too high:
   a. The FPru parameter may be set incorrectly.
   b. The A iPU parameter may be set incorrectly.

Wiring Diagrams

Figure 48. Unit-mounted fan speed switch with factory-mounted disconnect

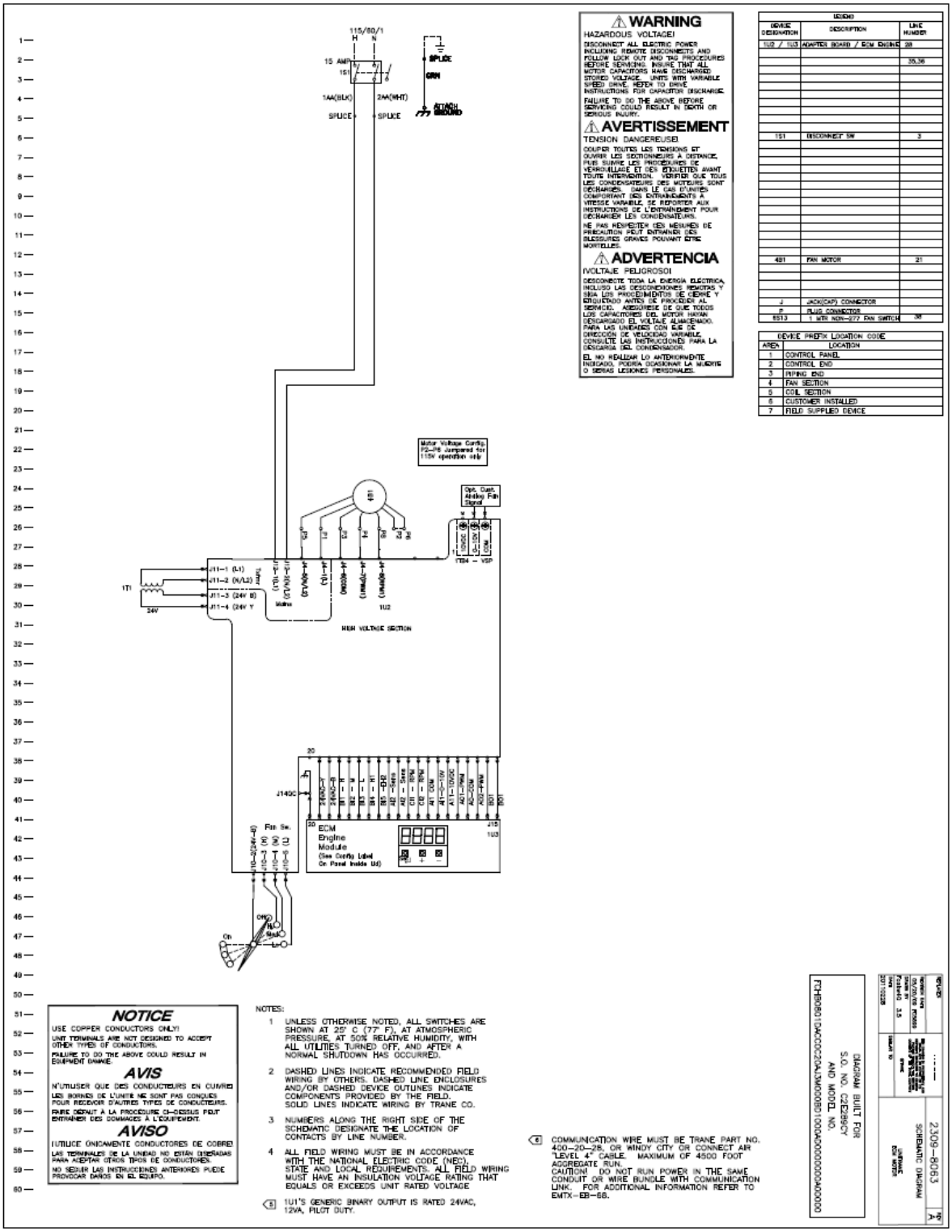

Figure 49. Tracer ZN 520 unit with two-stage electric heat and unit-mounted zone sensor

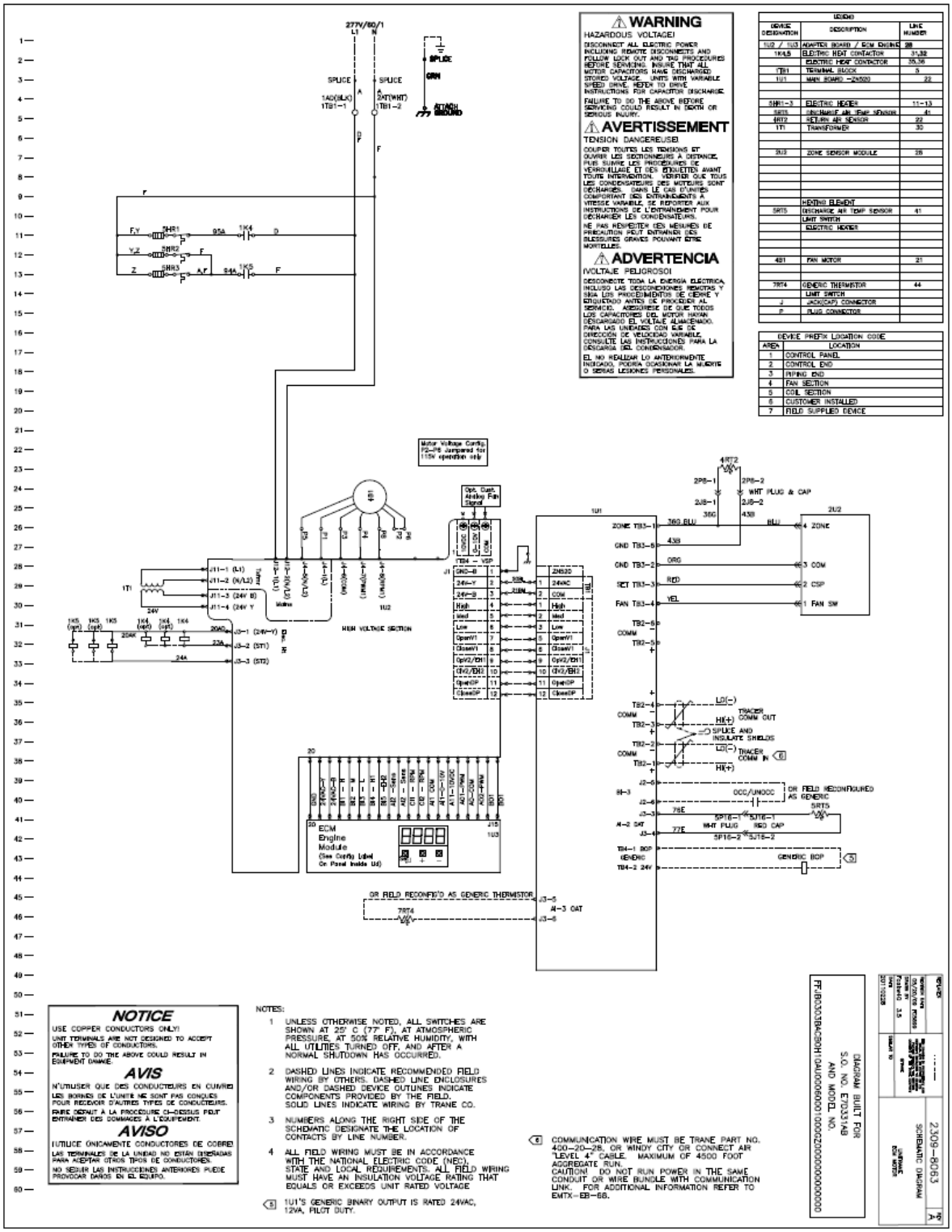

Figure 50. CSTI unit with single-stage electric heat and unit-mounted fan switch (Note: CSTI configuration switches)

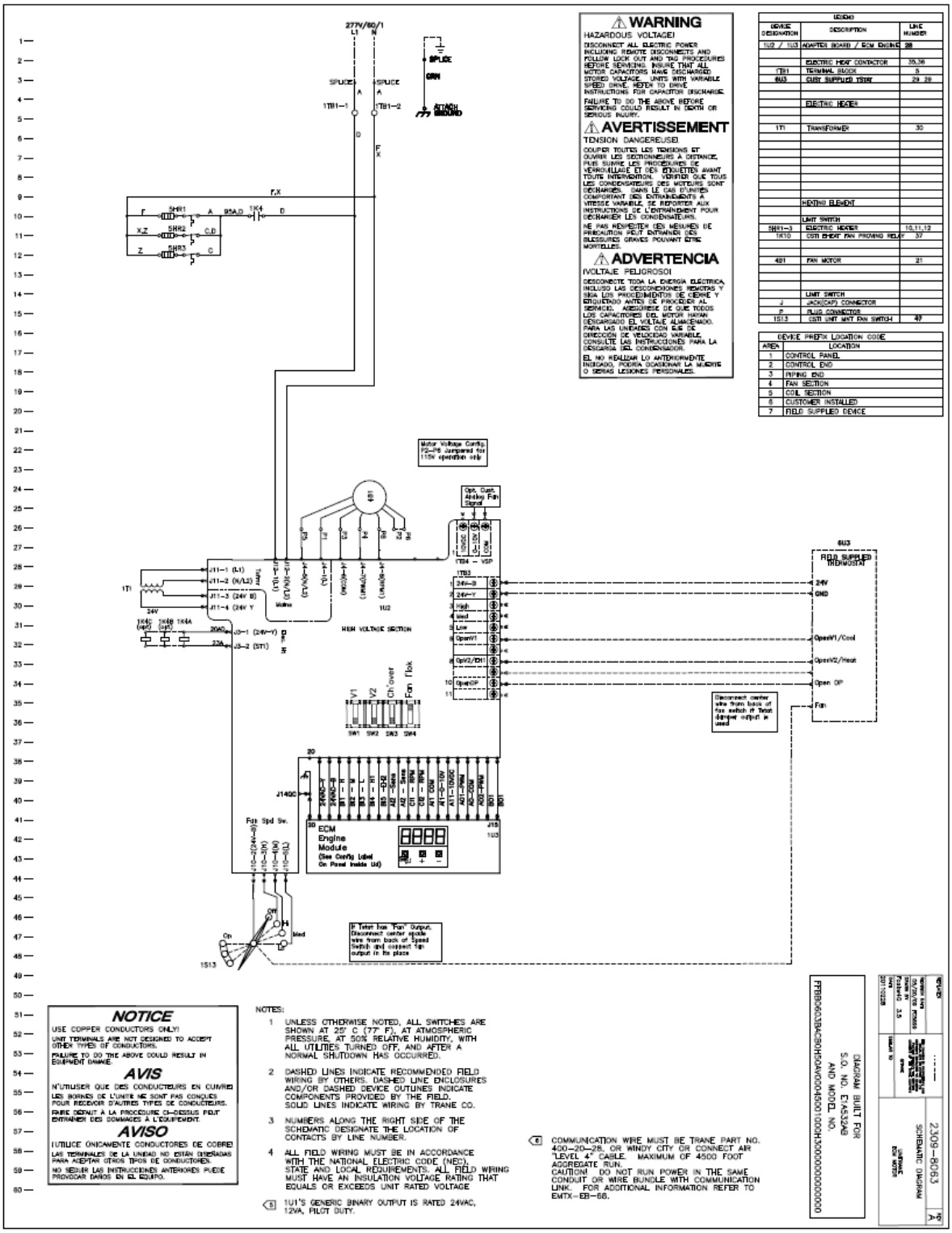

Figure 51. Tracer ZN520 unit with four-pipe configuration, condensate overflow switch and wall-mounted zone sensor

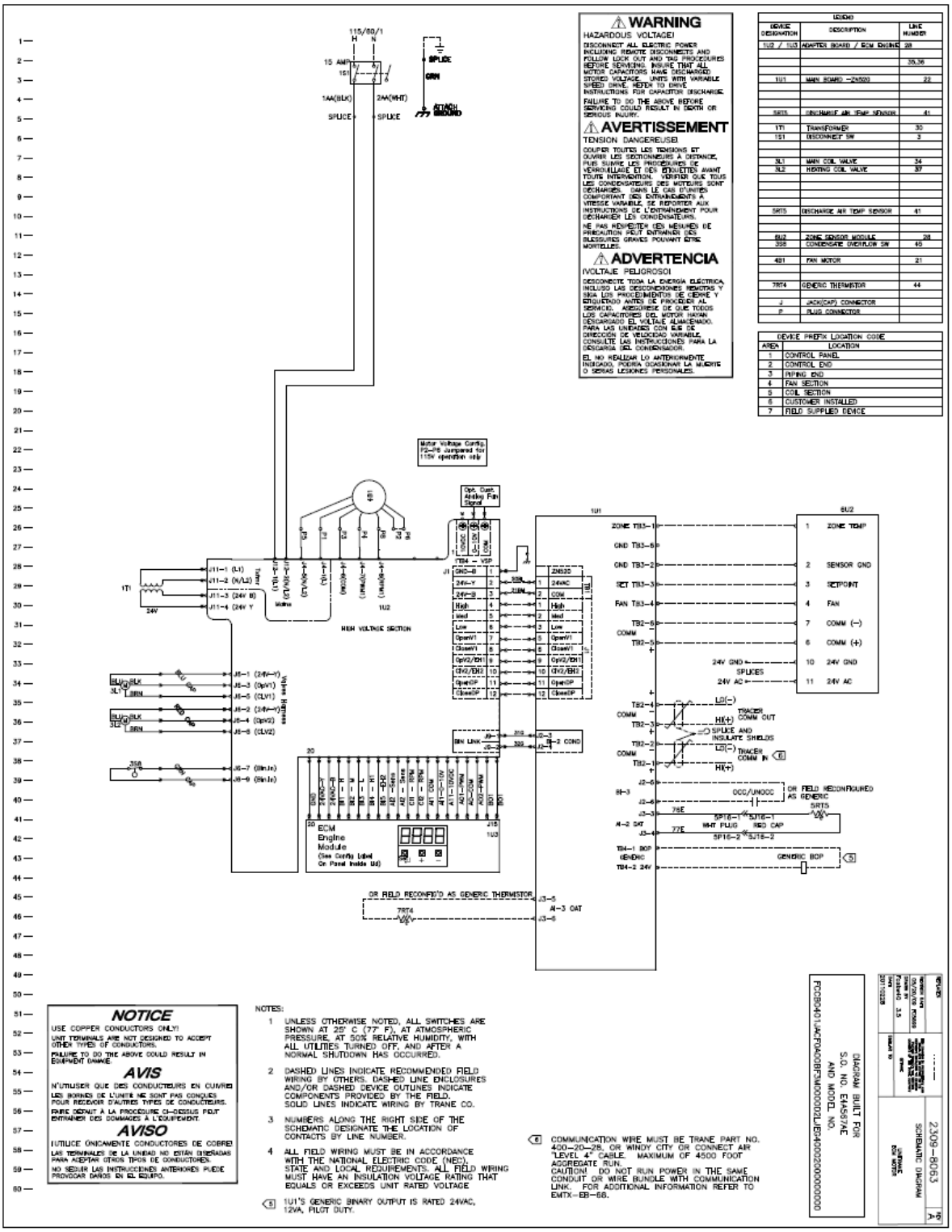

Figure 52. Tracer ZN510 unit with four-pipe configuration and split zone sensor/unit fan switch configuration

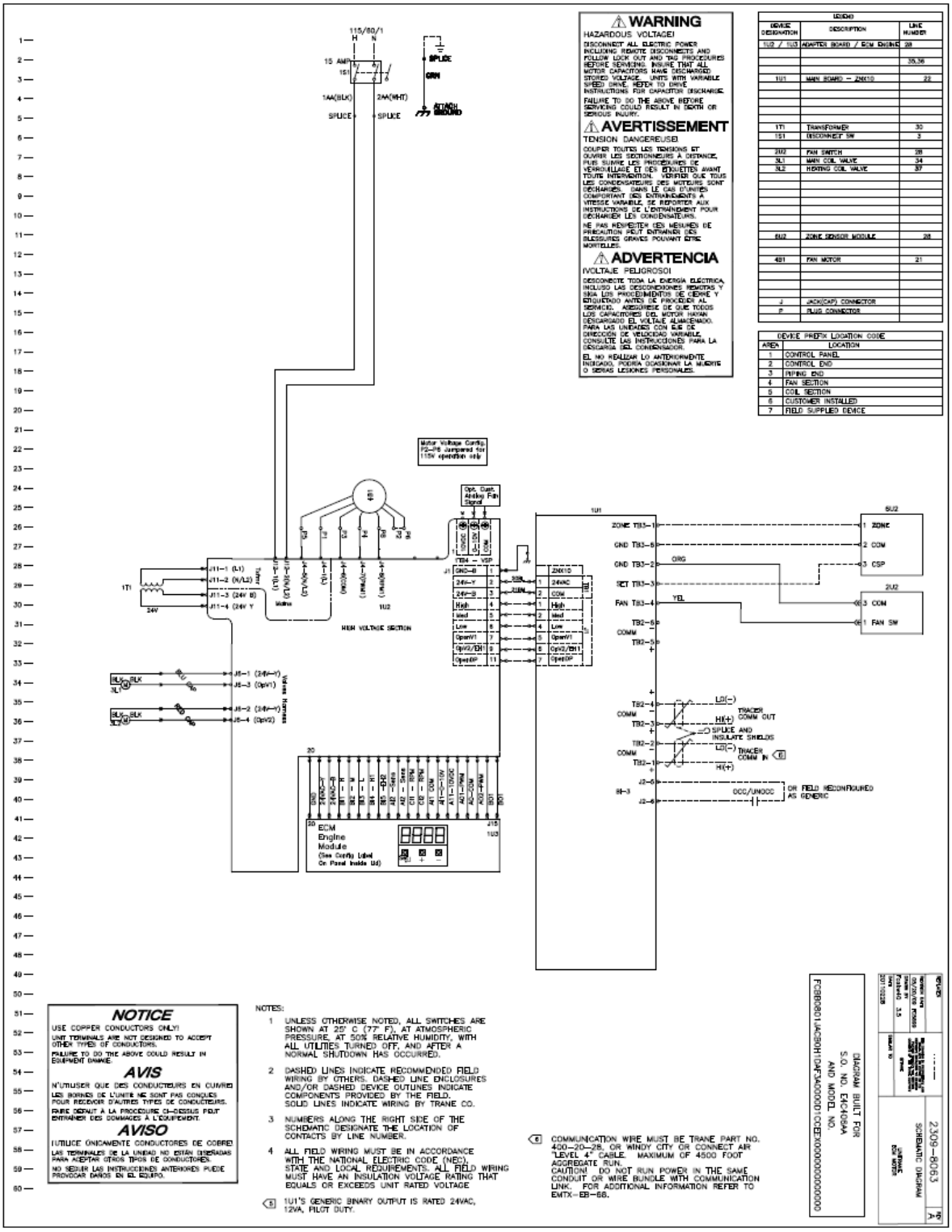

Trane optimizes the performance of homes and buildings around the world. A business of Ingersoll Rand, the leader in creating and sustaining safe, comfortable and energy efficient environments, Trane offers a broad portfolio of advanced controls and HVAC systems, comprehensive building services, and parts.
For more information, visit www.Trane.com.

Trane has a policy of continuous product and product data improvement and reserves the right to change design and specifications without notice.

© 2012 Trane All rights reserved
UNT-SVX07D-EN 27 Apr 2012
Supersedes UNT-SVX07C-EN (01 Nov 2011)

We are committed to using environmentally conscious print practices that reduce waste.