Installation, Operation, and Maintenance

IntelliPak™

Commercial Rooftop Air Conditioners with CV, VAV, or SZVAV Controls

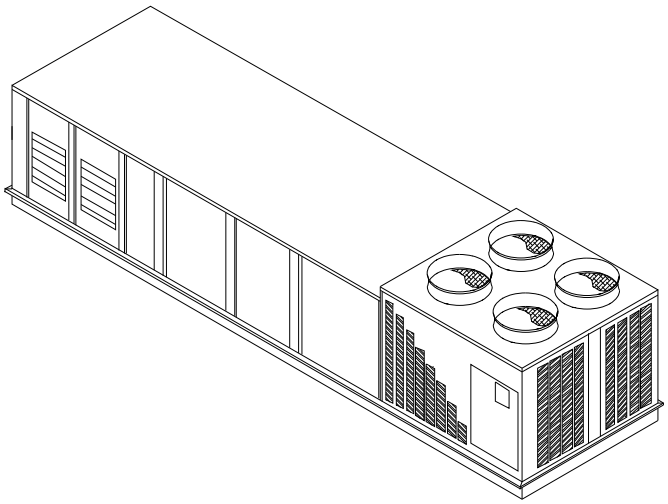

"A" and later Design Sequence

SAHL	*20, *25, *30, *40, *50, *55, *60, *70, *75
SEHL, SFHL, SLHL, SSHL, SXHL	*20, *25, *30, *40, *50, *55, *60, *70, *75, *24, *29, *36, *48, *59, *73, *80, *89
SXHK, SEHK, SFHK, SLHK, SSHK	*90, *11, *12, *13

⚠SAFETY WARNING

Only qualified personnel should install and service the equipment. The installation, starting up, and servicing of heating, ventilating, and air-conditioning equipment can be hazardous and requires specific knowledge and training. Improperly installed, adjusted or altered equipment by an unqualified person could result in death or serious injury. When working on the equipment, observe all precautions in the literature and on the tags, stickers, and labels that are attached to the equipment.

February 2015 **RT-SVX36M-EN**

Introduction

Read this manual thoroughly before operating or servicing this unit.

Warnings, Cautions, and Notices

Safety advisories appear throughout this manual as required. Your personal safety and the proper operation of this machine depend upon the strict observance of these precautions.

The three types of advisories are defined as follows:

WARNING Indicates a potentially hazardous situation which, if not avoided, could result in death or serious injury.

CAUTION Indicates a potentially hazardous situation which, if not avoided, could result in minor or moderate injury. It could also be used to alert against unsafe practices.

NOTICE: Indicates a situation that could result in equipment or property-damage only accidents.

Important Environmental Concerns

Scientific research has shown that certain man-made chemicals can affect the earth's naturally occurring stratospheric ozone layer when released to the atmosphere. In particular, several of the identified chemicals that may affect the ozone layer are refrigerants that contain chlorine, fluorine and carbon (CFCs) and those containing hydrogen, chlorine, fluorine, and carbon (HCFCs). Not all refrigerants containing these compounds have the same potential impact to the environment. Trane advocates the responsible handling of all refrigerants-including industry replacements for CFCs such as HCFCs and HFCs.

Important Responsible Refrigerant Practices

Trane believes that responsible refrigerant practices are important to the environment, our customers, and the air conditioning industry. All technicians who handle refrigerants must be certified. The Federal Clean Air Act (Section 608) sets forth the requirements for handling, reclaiming, recovering and recycling of certain refrigerants and the equipment that is used in these service procedures. In addition, some states or municipalities may have additional requirements that must also be adhered to for responsible management of refrigerants. Know the applicable laws and follow them.

WARNING

Proper Field Wiring and Grounding Required!

Failure to follow code could result in death or serious injury. All field wiring MUST be performed by qualified personnel. Improperly installed and grounded field wiring poses FIRE and ELECTROCUTION hazards. To avoid these hazards, you MUST follow requirements for field wiring installation and grounding as described in NEC and your local/state electrical codes.

WARNING

Personal Protective Equipment (PPE) Required!

Installing/servicing this unit could result in exposure to electrical, mechanical and chemical hazards.

- **Before installing/servicing this unit, technicians MUST put on all PPE required for the work being undertaken (Examples: cut resistant gloves/sleeves, butyl gloves, safety glasses, hard hat/bump cap, fall protection, electrical PPE and arc flash clothing). ALWAYS refer to appropriate Material Safety Data Sheets (MSDS)/Safety Data Sheets (SDS) and OSHA guidelines for proper PPE.**
- **When working with or around hazardous chemicals, ALWAYS refer to the appropriate MSDS/SDS and OSHA/GHS (Global Harmonized System of Classification and Labeling of Chemicals) guidelines for information on allowable personal exposure levels, proper respiratory protection and handling instructions.**
- **If there is a risk of energized electrical contact, arc, or flash, technicians MUST put on all PPE in accordance with OSHA, NFPA 70E, or other country-specific requirements for arc flash protection, PRIOR to servicing the unit. NEVER PERFORM ANY SWITCHING, DISCONNECTING, OR VOLTAGE TESTING WITHOUT PROPER ELECTRICAL PPE AND ARC FLASH CLOTHING. ENSURE ELECTRICAL METERS AND EQUIPMENT ARE PROPERLY RATED FOR INTENDED VOLTAGE.**

Failure to follow instructions could result in death or serious injury.

© 2015 Trane All rights reserved

⚠WARNING

Risk of Roof Collapsing!

Confirm with a structural engineer that the roof structure is strong enough to support the combined weight of the roofcurb and the unit. Refer to "Unit dimensions & weight information," p. 28 for typical unit and curb weights. Failure to ensure proper structural roof support could cause the roof to collapse, which could result in death or serious injury and property damage.

⚠WARNING

Fiberglass Wool!

Product contains fiberglass wool. Disturbing the insulation in this product during installation, maintenance or repair will expose you to airborne particles of glass wool fibers and ceramic fibers known to the state of California to cause cancer through inhalation. You MUST wear all necessary personal protective equipment (PPE) including gloves, eye protection, mask, long sleeves and pants when working with products containing fiberglass wool. Exposition to glass wool fibers without all necessary PPE equipment could result in cancer, respiratory, skin or eye irritation, which could result in death or serious injury.

Precautionary Measures

- Avoid breathing fiberglass dust.
- Use a NIOSH approved dust/mist respirator.
- Avoid contact with the skin or eyes. Wear long-sleeved, loose-fitting clothing, gloves, and eye protection.
- Wash clothes separately from other clothing; rinse washer thoroughly.
- Operations such as sawing, blowing, tear-out, and spraying may generate fiber concentrations requiring additional respiratory protection. Use the appropriate NIOSH approved respiration in these situations.

First Aid Measures

Eye Contact—Flush eyes with water to remove dust. If symptoms persist, seek medical attention**.**

Skin Contact—Wash affected areas gently with soap and warm water after handling**.**

Copyright

This document and the information in it are the property of Trane, and may not be used or reproduced in whole or in part without written permission. Trane reserves the right to revise this publication at any time, and to make changes to its content without obligation to notify any person of such revision or change.

Trademarks

All trademarks referenced in this document are the trademarks of their respective owners.

Unit Nameplate

One Mylar unit nameplate is located on the outside upper left corner of the control panel door. It includes the unit model number, serial number, electrical characteristics, weight, refrigerant charge, as well as to other pertinent unit data. A small metal nameplate with the Model Number, Serial Number, and Unit Weight is located just above the Mylar nameplate, and a third nameplate is located on the inside of the control panel door.

Compressor Nameplate

The Nameplate for the Scroll Compressor is located on the compressor lower housing.

Max amps is listed on the nameplate and is the absolute highest amp load on the compressor at any operating condition (does not include locked rotor amps or inrush). This value should never be exceeded.

Revision Summary

RT-PRC036R-EN (Feb 2015)

- Updated content with ultra low leak economizer standard information
- Added third lift lug per side
- Updated condensate drain locations and notes
- Corrected weights SL/SS unit weights and 60/73 roof curb
- Updated Figure 14, p. 30, Figure 15, p. 31, Figure 16, p. 32, Figure 17, p. 33, Figure 18, p. 34, Figure 19, p. 35, and Figure 21, p. 37 to include information on the following:
  - Third lug clearance
  - Condensate drain location
  - Rigging instructions to include shackle details
  - Dimensions for second drain location
  - Second drain on plenum fan units
  - Dimensions
  - Unit weights

Overview of Manual

This booklet describes proper installation, start-up, operation, and maintenance procedures for 20 through 130 ton rooftop air conditioners designed for Constant Volume (CV), Single Zone VAV (SZVAV), and Variable Air Volume (VAV) applications. By carefully reviewing the information within this manual and following the

instructions, the risk of improper operation and/or component damage will be minimized.

These units are equipped with electronic Unit Control Modules (UCM) which provides operating functions that are significantly different than conventional units. Refer to the "Start-Up" and "Test Mode" procedures within this Installation, Operation, & Maintenance manual and the latest edition of the appropriate programming manual for CV or VAV applications before attempting to operate or service this equipment.

Notes:

- *The procedures discussed in this manual should only be performed by qualified, experienced HVAC technicians.*
- *One copy of the appropriate service literature ships inside the control panel of each unit.*

It is important that periodic maintenance be performed to help assure trouble free operation. Should equipment failure occur, contact a qualified service organization with qualified, experienced HVAC technicians to properly diagnose and repair this equipment.

Unit Inspection

As soon as the unit arrives at the job site

- Verify that the nameplate data matches the data on the sales order and bill of lading (including electrical data).
- Verify that the power supply complies with the unit nameplate specifications.
- Verify that the power supply complies with the electric heater specifications on the unit nameplate.
- Visually inspect the exterior of the unit, including the roof, for signs of shipping damage.
- Check for material shortages. Refer to the Component Layout and Ship with Location illustration.
- If the job site inspection of the unit reveals damage or material shortages, file a claim with the carrier immediately. Specify the type and extent of the damage on the "bill of lading" before signing.
- Visually inspect the internal components for shipping damage as soon as possible after delivery and before it is stored. Do not walk on the sheet metal base pans.

⚠WARNING

No Step Surface!

Do not walk on the sheet metal drain pan. Walking on the drain pan could cause the supporting metal to collapse, resulting in the operator/technician to fall. Failure to follow this recommendation could result in death or serious injury.

- If concealed damage is discovered, notify the carrier's terminal of damage immediately by phone and by mail. Concealed damage must be reported within 15 days.
- Request an immediate joint inspection of the damage by the carrier and the consignee. Do not remove damaged material from the receiving location. Take photos of the damage, if possible. The owner must provide reasonable evidence that the damage did not occur after delivery.
- Remove the protective plastic coverings that shipped over the compressors.

Storage

Take precautions to prevent condensate from forming inside the unit's electrical compartments and motors if the unit:

- Is stored before it is installed.
- Is set on the roof curb and temporary heat is provided in the building. Isolate all side panel service entrances and base pan openings (e.g., conduit holes, S/A and R/A openings, and flue openings) from the ambient air until the unit is ready for startup

Note: Do not use the unit's heater for temporary heat without first completing the startup procedure detailed under "Starting the Unit".

Trane will not assume any responsibility for equipment damage resulting from condensate accumulation on the unit's electrical and/or mechanical components.

Factory Warranty Information

Compliance with the following is required to preserve the factory warranty:

All Unit Installations

Startup MUST be performed by Trane, or an authorized agent of Trane, to VALIDATE this WARRANTY. Contractor must provide a two-week startup notification to Trane (or an agent of Trane specifically authorized to perform startup).

On all IntelliPak™ I units, a Trane factory REQUIRED startup (mandatory with Evaporative Condensing or optionally selected ON OTHER UNITS) provides "maximized unit reliability and overall unit performance," in addition to preserving the standard factory warranty.

Additional Requirements for Units Requiring Disassembly

When a new fully assembled IntelliPak is shipped and received from our Trane manufacturing location, and, for any reason, it requires disassembly or partial disassembly, which could include but is not limited to the evaporator, condenser, control panel, compressor/motor, factory mounted starter, or any other components originally attached to the fully assembled unit, compliance with the following is required to preserve the factory warranty:

- Trane, or an agent of Trane specifically authorized to perform start-up and warranty of Trane® products, will

perform or have direct on-site technical supervision of the disassembly and reassembly work.

- The installing contractor must notify Trane, or an agent of Trane specifically authorized to perform start-up and warranty of Trane® products, two weeks in advance of the scheduled disassembly work to coordinate the disassembly and reassembly work.
- Start-up must be performed by Trane or an agent of Trane specifically authorized to perform start-up and warranty of Trane® products.

Trane, or an agent of Trane specifically authorized to perform startup and warranty of Trane® products, will provide qualified personnel and standard hand tools to perform the disassembly work at a location specified by the contractor.The contractor shall provide the rigging equipment, such as chain falls, gantries, cranes, forklifts, etc., necessary for the disassembly and reassembly work and the required qualified personnel to operate the necessary rigging equipment.

Table of Contents

Introduction 2
- Warnings, Cautions, and Notices 2
- Copyright 3
- Trademarks 3
- Unit Nameplate 3
- Compressor Nameplate 3
- Revision Summary 3
- Overview of Manual 3
- Unit Inspection 4
- Storage 4
- Factory Warranty Information 4

Model Number Descriptions 8

General Information 12
- Commonly Used Acronyms 12
- Unit Description 12
- Rooftop Module (RTM—1U48 standard on all units) 12
- Compressor Modules 13
- Human Interface Module 13
- Heat Module 13
- Modulating Dehumidification Module MDM 13
- Ventilation Override Module 13
- Variable Speed Module 13
- Fault Detection and Diagnostics (FDD) . . . 14
- Interprocessor Communications Board . . 14
- LonTalk/BACnet Communication Interface Module 14
- Exhaust/Comparative Enthalpy Module . . 14
- Ventilation Control Module 15
- Generic Building Automation System Module 15
- Multipurpose Module 16
- Input Devices & System Functions 16
- Constant Volume (CV), Single Zone Variable Air Volume (SZVAV) & Variable Air Volume (VAV) Sensors & Controls . . . 16
- Constant Volume (CV) Units 20
- Single Zone Variable Air Volume (SZVAV) Only 20

Installation 28
- Unit Inspection 28
- Storage 28
- Unit Clearances 28
- Trane Roof Curb and Ductwork 40
- Pitch Pocket Location 40
- If Trane Curb Accessory Kit Not Used 41
- Unit Rigging & Placement 42
- General Unit Requirements 43
- Main Electrical Power Requirements 43
- Electric Heat Unit Requirements 43
- Gas Heat (SFH_) Requirements 43
- Hot Water Heat (SLH_) Requirements 44
- Steam Heat (SSH_) Requirements 44
- O/A Pressure Sensor and Tubing Installation (units with Statitrac or return fans) 44
- Modulating Reheat Dehumidification (S_HL) Requirements 44
- Condensate Drain Connections 44
- Units with Gas Furnace 45
- Removing Supply and Exhaust/Return Fan Shipping Channels (motors >5 Hp) . . .46
- Optional DDP Supply Fan Shipping Channel Removal and Isolator Spring Adjustment 46
- O/A Sensor and Tubing Installation 48
- Evaporative Condenser Make-up Water and Drain Line Installation 49
- Gas Heat Units (SFH_) 51
- Flue Assembly Installation 53
- Hot Water Heat Units (SLH_) 53
- Steam Heat Units (SSH_) 54
- Disconnect Switch External Handle 57
- Electric Heat Units (SEH_) 57
- Main Unit Power Wiring 58
- Power Wire Sizing and Protection Device Equations 63
- Field-installed Control Wiring 64
- Controls Using 24 VAC 64

Controls using DC Analog Input/Outputs 65
Constant Volume System Controls 65
Variable Air Volume and Constant Volume System Controls 65
Unit Replacement 77
Electrical Connection 77
Lifting procedures 79
Installation Checklist 83
20 to 130 Tons, Air-Cooled and Evaporative Condensing 83
Unit Start Up 85
Cooling Sequence of Operation 85
Gas Heating Sequence of Operation 91
Modulating Gas Sequence of Operation—Full and Limited Modulating Gas Furnace 92
Electric Heat Sequence of Operation 93
Wet Heat Sequence of Operation 93
Voltage Supply and Voltage Imbalance . . 95
Verifying Proper Fan Rotation 101
Direct-Drive Supply Fan Speed Adjustment 102
System Airflow Measurements 103
VAV Systems with DDP Supply Fan 104
Exhaust Airflow Measurement (Optional with all Units) 104
Traq Sensor Airflow Measurement (Optional with all units equipped with economizer) 105
Return Plenum Pressure Control (Units equipped with Return Fan) 105
Pressure Drop Tables 116
Economizer Damper Adjustment 125
Compressor Start Up (All Systems) 127
Compressor Operational Sounds 129
Evaporative Condenser Start-up 130
Pressure Curves 131
Thermostatic Expansion Valves 147
Low Ambient Dampers 148
Gas Furnace Start-up (Constant Volume and Variable Air Volume Systems) 150
Full Modulating Gas Furnace 152
Limited Modulating Gas Furnace 153
Final Unit Checkout 154
Start-up Checklists 156
20 to 75 Ton—Air-Cooled 156
24 to 89 Ton—Evaporative Condenser . . .159
Maintenance 166
Fan Belt Adjustment 172
Scroll Compressor Replacement 173
Monthly Maintenance 179
Coil Cleaning 181
Fall Restraint 184
Final Process 184
Unit Wiring Diagram Numbers 186
Warranty 191
Commercial Equipment Rated 20 Tons and Larger and Related Accessories 191
Factory Warranty Information 191

Model Number Descriptions

S	A	H	L	*	5	0	4	0	A	6	8	A	6	B	D	8	0	0	1	0	0	W	0	0	G	0	B	0	0	0	R	0	0	0	8	0	0
1	2	3	4	5	6	7	8	9	10	11	12	13	14	15	16	17	18	19	20	21	22	23	24	25	26	27	28	29	30	31	32	33	34	35	36	37	38

DIGIT 1—UNIT TYPE

S = Self-contained (packaged rooftop)

DIGIT 2—UNIT FUNCTION

A = DX cooling, no heat
E = DX cooling, electric heat
F = DX cooling, natural gas heat
L = DX cooling, hot water heat
S = DX cooling, steam heat
X = DX cooling, no heat, extended casing

DIGIT 3—UNIT AIRFLOW

H = Single zone

DIGIT 4—DEVELOPMENT SEQUENCE

L = Sixth

DIGITS 5,6,7—NOMINAL CAPACITY

*20 = 20 tons air-cooled
*25 = 25 tons air-cooled
*30 = 30 tons air-cooled
*40 = 40 tons air-cooled
*50 = 50 tons air-cooled
*55 = 55 tons air-cooled
*60 = 60 tons air-cooled
*70 = 70 tons air-cooled
*75 = 75 tons air-cooled
*24 = 24 tons evap condenser
*29 = 29 tons evap condenser
*36 = 36 tons evap condenser
*48 = 48 tons evap condenser
*59 = 59 tons evap condenser
*73 = 73 tons evap condenser
*80 = 80 tons evap condenser
*89 = 89 tons evap condenser

DIGIT 8—POWER SUPPLY

4 = 460/60/3 XL E = 200/60/3 XL
5 = 575/60/3 XL F = 230/60/3 XL

Note: SEHL units (units with electric heat) utilizing 208V or 230V require dual power source.

DIGIT 9—HEATING CAPACITY

Note: When the second digit calls for "F" (gas heat), the following values apply: (note G and M are available ONLY on 50 ton models and above)

G = Low heat—limited modulation
H = High heat—2-stage
J = High heat—limited
L = Low heat—2-stage
M = Low heat—full modulation
0 = No heat
p = High heat—full modulation

Note: When the second digit calls for "E" (electric heat), the following values apply:

D =	30 kW	R =	130 kW
H =	50 kW	U =	150 kW
L =	70 kW	V =	170 kW
N =	90 kW	W =	190 kW
Q =	110 kW		

Note: When the second digit calls for "L" (hot water) or "S" (steam) heat, one of the following valve size values must be in digit 9:

High Heat Coil:

1 = .50"	2 = .75"	3 = 1"
4 = 1.25"	5 = 1.5"	6 = 2"

Low Heat Coil:

A = .50"	B = .75"	C = 1"
D = 1.25"	E = 1.5"	F = 2"

DIGIT 10—DESIGN SEQUENCE

A = First (factory assigned)

Note: Sequence may be any letter A thru Z, or any digit 1 thru 9.

DIGIT 11—EXHAUST/RETURN OPTION

0 = None
1 = Barometric
3 = 100% exhaust 3 hp w/Statitrac
4 = 100% exhaust 5 hp w/Statitrac
5 = 100% exhaust 7.5 hp w/Statitrac
6 = 100% exhaust 10 hp w/Statitrac
7 = 100% exhaust 15 hp w/Statitrac
8 = 100% exhaust 20 hp w/Statitrac
B = 50% exhaust 3 hp
C = 50% exhaust 5 hp
D = 50% exhaust 7.5 hp
F = 100% exhaust 3 hp w/o Statitrac (CV only)
G = 100% exhaust 5 hp w/o Statitrac (CV only)
H = 100% exhaust 7.5 hp w/o Statitrac (CV only)
J = 100% exhaust 10 hp w/o Statitrac (CV only)
K = 100% exhaust 15 HP w/o Statitrac (CV only)
L = 100% exhaust 20 hp w/o Statitrac (CV only)
9 = 100% return 3 hp w/Statitrac
M = 100% return 5 hp w/Statitrac
N = 100% return 7.5 hp w/Statitrac
P = 100% return 10 hp w/Statitrac
R = 100% return 15 hp w/Statitrac
T = 100% return 20 hp w/Statitrac
U = 100% return 3 hp w/o Statitrac (CV only)
V = 100% return 5 hp w/o Statitrac (CV only)
W = 100% return 7.5 hp w/o Statitrac (CV only)
X = 100% return 10 hp w/o Statitrac (CV only)
Y = 100% return 15 hp w/o Statitrac (CV only)
Z = 100% return 20 hp w/o Statitrac (CV only)

DIGIT 12—EXHAUST/RETURN AIR FAN DRIVE

(Exhaust/Return Fan)

0 =	None	8 =	800 rpm
4 =	400 rpm	9 =	900 rpm
5 =	500 rpm	A =	1000 rpm
6 =	600 rpm	B =	1100 rpm
7 =	700 rpm		

(Return Fan only)

C =	1200 rpm	H =	1700 rpm
D =	1300 rpm	J =	1800 rpm
E =	1400 rpm	K =	1900 rpm
F =	1500 rpm		
G =	1600 rpm		

DIGIT 13—FILTER (PRE DX/FINAL)

A = Throwaway
B = Cleanable wire mesh
C = High-efficiency throwaway
D = Bag with prefilter
E = Cartridge with prefilter
F = Throwaway filter rack (filter not included)
G = Bag filter rack (filter not included)
H = Standard throwaway filter/cartridge final filters
J = High efficiency throwaway filter/ cartridge final filters
K = Bag filters with 2" throwaway prefilters/cartridge final filters
L = Cartridge filters with 2" throwaway prefilters/cartridge final filters
M = Standard throwaway filter/cartridge final filters with 2"throwaway prefilters
N = High efficiency throwaway filters/ cartridge final filters with 2" throwaway prefilters
P = Bag filters with prefilters/cartridge final filters with 2" throwaway prefilters
Q = Cartridge filters with prefilters/ cartridge final filters with 2" throwaway prefilters

DIGIT 14—SUPPLY AIR FAN HP

1 = 3 hp FC
2 = 5 hp FC
3 = 7.5 hp FC
4 = 10 hp FC
5 = 15 hp FC
6 = 20 hp FC
7 = 25 hp FC
8 = 30 hp FC
9 = 40 hp FC
A = 50 hp FC
B = 3 hp DDP 80W
C = 3 hp DDP 120W
D = 5 hp DDP 80W
E = 5 hp DDP 120W
F = 7.5 hp DDP 80 W
G = 7.5 hp DDP 120W
H = 10 hp DDP 80W (60-89T = 2 x 5 hp)
J = 10 hp DDP 120W (60-89T = 2 x 5 hp)
K = 15 hp DDP 80W (60-89T = 2 x 7.5 hp)
L = 15 hp DDP 120W (60-89T = 2 x 7.5 hp)
M = 20 hp DDP 80W (60-89T = 2 x 10 hp)
N = 20 hp DDP 120W (60-89T = 2 x 10 hp)
P = 25 hp DDP 80W
R = 25 hp DDP 120W
T = 30 hp DDP 80W (60-89T = 2 x 15 hp)
U = 30 hp DDP 120W (60-89T = 2 x 15 hp)
V = 40 hp DDP 80W (60-89T = 2 x 20 hp)
W = 40 hp DDP 120W (60-89T = 2 x 20 hp)
X = 50 hp DDP 80W(70 & 75-89T = 2 x 25 hp)
Y = 50 hp DDP 120W (70 & 75-89T = 2 x 25 hp)
Z = 30 hp DDP 100W[a]

(a) 50, 55T only

DIGIT 15—SUPPLY AIR FAN RPM

4 =	400 rpm	f =	1500 rpm
5 =	500 rpm	g =	1600 rpm
6 =	600 rpm	h =	1700 rpm
7 =	700 rpm	j =	1800 rpm
8 =	800 rpm	k =	1900 rpm
9 =	900 rpm	l =	2000 rpm
A =	1000 rpm	m =	2100 rpm
B =	1100 rpm	n =	2200 rpm
C =	1200 rpm	p =	2300 rpm
D =	1300 rpm	r =	2400 rpm
E =	1400 rpm		

DIGIT 16—OUTSIDE AIR

A = No fresh air
B = 0-25% manual
D = 0-100% economizer
E = 0-100% economizer w/TRAQ/DCV

Note: Must install CO_2 sensor(s) for DCV to function properly.

DIGIT 17—SYSTEM CONTROL

1 = CV—Zone temp control
2 = CV—Discharge temp control
4 = CV—Zone temp control Space pressure control w/exhaust/return VFD w/o bypass
5 = CV—Zone temp control Space pressure control w/exhaust/return VFD and bypass
6 = VAV discharge temp control w/VFD w/o bypass
7 = VAV discharge temp control w/VFD and bypass
8 = VAV discharge temp control Supply and exhaust/return fan w/VFD w/o bypass
9 = VAV discharge temp control supply and exhaust/return fan w/VFD and bypass
A = VAV—Single zone VAV—w/VFD w/o bypass
B = VAV—Single zone VAV—w/VFD and bypass
C = VAV—Single zone VAV—supply and exhaust/return fan w/VFD w/o bypass
D = VAV—Single zone VAV—supply and exhaust/return fan w/VFD w/bypass

DIGIT 18—ZONE SENSOR

0 = None
A = Dual setpoint manual or auto changeover (BAYSENS108*)
B = Dual setpoint manual or auto changeover w/system function lights (BAYSENS110*)
C = Room sensor w/override and cancel buttons (BAYSENS073*)
D = Room sensor w/temperature adjustment and override and cancel buttons (BAYSENS074*)
L = Programmable zone sensor w/ system function lights for CV, SZVAV, and VAV (BAYSENS119*)

*Note: *Asterisk indicates current model number digit A, B, C, etc. These sensors can be ordered to ship with the unit.*

DIGIT 19—AMBIENT CONTROL

0 = Standard
1 = 0° Fahrenheit

DIGIT 20—AGENCY APPROVAL

0 = None (cULus gas heater, see note)
1 = cULus

Note: Includes cULus classified gas heating section only when second digit of model number is an "F."

DIGITS 21–38—MISC

21 A = Unit disconnect switch
22 B = Hot gas bypass
C = Hot gas reheat w/o hot gas bypass
D = Hot gas reheat and hot gas bypass
23 0 = Without economizer
C = Economizer control w/comparative enthalpy
Z = Economizer control w/reference enthalpy
W = Economizer control w/dry bulb
24 E = Low leak fresh air dampers
U = Ultra low leak economizer dampers (and ultra low leak motorized exhaust dampers when exhaust/return option includes motorized dampers)
25 F = High duct temperature thermostat
26 D = Digital scroll (20-30 tons, design special)
26 G = High capacity unit
H = High efficiency unit
V = eFlex variable speed compressor
27 0 = Air-cooled aluminum condenser coil
J = Corrosion protected condenser coil
A = Evap condenser
B = Evap condenser w/sump heater
C = Evap condenser w/Dolphin WaterCare system
D = Evap condenser w/sump heater and Dolphin WaterCare system
E = Evap condenser w/conductivity controller
F = Evap condenser w/conductivity controller and sump heater
28 B = GBAS 0-10V
K = GBAS 0-5V
R = Rapid restart
29 A = Motors w/internal shaft grounding
30 M = Remote human interface
31 N = Ventilation override module
32 0 = None
R = Extended grease lines
1 = Differential pressure gauge
2 = Extended grease lines and differential pressure gauge
33 0 = Standard panels
T = Access doors
U = IRU—w/std panels
W = IRU—w/access doors
Y = IRU w/SST—w/std panels
Z = IRU w/SST—w/access doors
34 V = Inter-processor communication bridge
35 M = BACnet communication interface (BCI) module
Y = Trane communication interface (TCI) module
7 = Trane LonTalk communication interface (LCI) module
36 8 = Spring isolators
37 6 = Factory-powered 15A GFI convenience outlet/disconnect switch
38 A = Supply fan piezometer
J = Temperature sensor

Tip: EXAMPLE
Model numbers:
*SAHL*5040A68A6BD800100W00G0B000R000800 describes a unit with the following characteristics:*
DX cooling only unit w/no extended casing, 50 ton nominal cooling capacity, 460/60/3 power supply, 100% exhaust with Statitrac, 10 hp exhaust fan motor w/drive selection No. 8 (800 rpm), throwaway filters, 20 hp supply fan motor w/drive selection No. B (1100 rpm), 0-100% economizer w/dry bulb control, supply and exhaust VFD w/o bypass, no remote panel, standard ambient control, cULus agency approval. High capacity unit, extended grease lines and spring isolators. Service digit for each model number contains 38 digits; all 38 digits must be referenced.

Model Number Descriptions

S	X	H	K	*	1	1	4	0	A	H	8	C	E	C	D	8	0	0	1	*	*	Z	*	*	*	*	*	*	*	*	*	*	*	*	*	*	*	*	*	*	*
1	2	3	4	5	6	7	8	9	10	11	12	13	14	15	16	17	18	19	20	21	22	23	24	25	26	27	28	29	30	31	32	33	34	35	36	37	38

DIGIT 1—UNIT TYPE

S = Self-contained (packaged rooftop)

DIGIT 2—UNIT FUNCTION

E = DX cooling, electric heat
F = DX cooling, natural gas heat
L = DX cooling, hot water heat
S = DX cooling, steam heat
X = DX cooling, no heat, extended casing

DIGIT 3—UNIT AIRFLOW

H = Single zone

DIGIT 4—DEVELOPMENT SEQUENCE

K = R-410A development sequence

DIGITS 5,6,7—NOMINAL CAPACITY

*90 = 90 tons air-cooled
*11 = 105 tons air-cooled
*12 = 115 tons air-cooled
*13 = 130 tons air-cooled

DIGIT 8—POWER SUPPLY (See Notes)

4 = 460/60/3 XL
5 = 575/60/3 XL

DIGIT 9—HEATING CAPACITY

0 = No heat
H = High heat—2-stage
J = High heat—limited modulation
P = High heat—full modulation

Note: When the second digit calls for "E" (electric heat), the following values apply in the ninth digit:

W = 190 kW

Note: When the second digit calls for "L" (hot water) or "S" (steam) heat, one of the following valve size values must be in digit 9:

High Heat Coil: 3 = 1", 4 = 1.25", 5 = 1.5", 6 = 2", 7 = 2.5"
Low Heat Coil: C = 1", D = 1.25", E = 1.5", F = 2", G = 2.5"

DIGIT 10—DESIGN SEQUENCE

A = First (factory assigned)

Note: Sequence may be any letter A thru Z, or any digit 1 thru 9.

DIGIT 11—EXHAUST OPTION

0 = None
7 = 100% exhaust 15 hp w/Statitrac
8 = 100% exhaust 20 hp w/Statitrac
9 = 100% exhaust 25 hp w/Statitrac
F = 50% exhaust 15 hp
H = 100% exhaust 30 hp w/ Statitrac
J = 100% exhaust 40 hp w/ Statitrac
K = 100% exhaust 15 hp w/o Statitrac (CV only)
L = 100% Exhaust 20 hp w/o Statitrac (CV only
M = 100% exhaust 25 hp w/o Statitrac (CV only
N = 100% exhaust 30 hp w/o Statitrac (CV only
P = 100% exhaust 40 hp w/o Statitrac (CV only)

DIGIT 12—EXHAUST AIR FAN DRIVE

(Exhaust fan)
0 = None
5 = 500 rpm
6 = 600 rpm
7 = 700 rpm
8 = 800 rpm

DIGIT 13—FILTER (PRE DX/FINAL)

A = Throwaway
C = High-efficiency throwaway
D = Bag with prefilter
E = Cartridge with prefilter
F = Throwaway filter rack (filter not included)
G = Bag Filter rack (filter not included)
H = Standard throwaway filter/cartridge final filters
J = High efficiency throwaway filter/ cartridge final filters
K = Bag Filters with 2" throwaway prefilters/cartridge final filters
L = Cartridge filters with 2" throwaway prefilters/cartridge final filters
M = Standard throwaway filter cartridge/ final filters with 2" throwaway prefilters
N = High efficiencythrowaway filters/ cartridge final filters with 2" throwaway prefilters
P = Bag filters with prefilters/cartridge final filters with 2" throwaway prefilters
Q = Cartridge filters with prefilters/ cartridge final filters with 2" throwaway prefilters

DIGIT 14—SUPPLY AIR FAN HP

C = 30 hp (2-15 hp)
D = 40 hp (2-20 hp)
E = 50 hp (2-25 hp)
F = 60 hp (2-30 hp)
G = 80 hp (2-40 hp)

DIGIT 15—SUPPLY AIR FAN DRIVE

A = 1000 rpm
B = 1100 rpm
C = 1200 rpm
D = 1300 rpm
E = 1400 rpm
F = 1500 rpm
G = 1600 rpm

DIGIT 16—OUTSIDE AIR

D = 0-100% Economizer (std.)
E = 0-100% Economizer w/TRAQ w/DCV

Note: Must install CO_2 sensor(s) for DCV to function properly

DIGIT 17—SYSTEM CONTROL

1 = CV—Zone temperature control
2 = CV—Discharge temperature control
4 = CV—Zone temperature control space pressure control w/exhaust VFD w/o bypass
5 = CV—Zone temperature control space pressure control w/exhaust VFD and bypass
6 = VAV discharge temperature control w/VFD w/o bypass
7 = VAV discharge temperature control w/VFD and bypass
8 = VAV discharge temperature control supply and exhaust fan w/VFD w/o bypass
9 = VAV discharge temperature control supply and exhaust fan w/VFD and bypass
A = VAV—single zone VAV—w/VFD w/o bypass
B = VAV—single zone VAV—w/VFD w/bypass
C = VAV—single zone VAV—supply and exhaust/return fan w/VFD w/o bypass
D = VAV—single zone VAV—supply and exhaust/return fan w/VFD w/bypass

DIGIT 18—ZONE SENSOR

0 = None
A = Dual setpoint manual or auto changeover (BAYSENS108*)
B = Dual setpoint manual or auto changeover w/system function lights (BAYSENS110*)
C = Room sensor w/override and cancel buttons (BAYSENS073*)
D = Room sensor w/temperature adjustment and override and cancel buttons (BAYSENS074*)
L = Programmable zone sensor w/ system function lights for both CV and VAV (BAYSENS119*)

*Note: *Asterisk indicates current model number digit A, B, C, etc. These sensors can be ordered to ship with the unit.*

DIGIT 19—AMBIENT CONTROL

0 = Standard

DIGIT 20—AGENCY APPROVAL

0 = None (cULus gas heater, see note)
1 = cULus

Note: Includes cULus classified gas heating section only when second digit of model number is an "F."

DIGITS 21–38—MISC

21 A = Unit disconnect switch
22 B = Hot gas bypass
23 C = Economizer control w/ comparative enthalpy
Z = Economizer control w/reference enthalpy
W = Economizer control w/dry bulb
24 E = Low leak outside air dampers
U = Ultra low leak economizer dampers (and ultra low leak motorized exhaust dampers when exhaust/return option includes motorized dampers)
25 F = High duct temperature thermostat
26 G = High capacity evap. coil (105 ton)
H = High cap. evap. coil and high eff. cond. coil (90 ton)
27 0 = Air-cooled aluminum condenser coil
J = Corrosion-protected condenser coil
28 K = Generic B.A.S module
R = Rapid restart
29 A = Motors w/internal shaft grounding
30 M = Remote human interface
31 N = Ventilation override module
32 0 = None
R = Extended grease lines
1 = Differential pressure gauge
2 = Extended grease lines and differential pressure gauge
33 0 = Standard panels
T = Access doors
U = IRU—w/std panels
W = IRU—w/access doors
Y = IRU w/SST—w/std panels
34 V = Inter-processor communication bridge
35 Y = Trane communication interface (TCI) module
M = BACnet communication interface (BCI) module
7 = Trane LonTalk communication interface (LCI) module
37 6 = Factory-powered 15A GFI convenience outlet

Tip: EXAMPLE
Model numbers:
*SXHK*1140AH8CECD8001**Z*
describes a unit with the following characteristics:
DX cooling with extended casing, no heat, 105 ton nominal cooling capacity, 460/60/3 power supply, 100 percent exhaust with Statitrac, 30 hp exhaust fan motor with drive selection No. 8—(800 rpm), high-efficiency throwaway filters, 50 hp supply fan motor with 1200 rpm, economizer, w/reference enthalpy control, supply and exhaust with VFD but no bypass, cULus agency approval.
The service digit for each model number contains 36 digits; all 36 digits must be referenced.

General Information

Commonly Used Acronyms

For convenience, a number of acronyms and abbreviations are used throughout this manual. These acronyms are alphabetically listed and defined below.

- AC = Air-cooled condenser
- BAS = Building automation systems
- BCI = BACnet communication interface module
- CFM = Cubic-feet-per-minute
- CKT. = Circuit
- CLV = Cooling valve (reheat only)
- CV = Constant volume
- CW = Clockwise
- CCW = Counterclockwise
- DDP = Direct-drive plenum
- E/A = Exhaust air
- EC = Evaporative condenser
- ECEM = Exhaust/comparative enthalpy module
- F/A = Fresh air
- FDD = Failure detection and diagnostics
- FC = Forward-curved
- GBAS = Generic building automation system
- HGBP = Hot gas bypass
- HGRH = Hot gas reheat
- HI = Human interface
- HVAC = Heating, ventilation and air conditioning
- HPC = High pressure cutout
- I/O = Inputs/outputs
- IOM = Installation/operation/ maintenance manual
- IPC = Interprocessor communications
- IPCB = Interprocessor communications bridge
- IRU = Intellipak replacement unit
- LCI-I = LonTalk communication interface for IntelliPak
- LH = Left-hand
- MCHE = Microchannel coil
- LPC = Low pressure cutout
- MCM = Multiple circuit module
- MDM = Modulating dehumidification module
- MPM = Multipurpose module
- MWU = Morning warm-up
- NSB = Night setback
- O/A = Outside air
- psig = Pounds-per-square-inch, gauge pressure
- PTFE = Polytetrafluoroethylene (Teflon®)
- R/A = Return air
- RAH = Return air humidity
- RH = Right-hand
- RHP = Reheat pumpout solenoid valve
- RHV = Reheat valve
- RPM = Revolutions-per-minute
- RT = Rooftop unit
- RTM = Rooftop module
- S/A = Supply air
- SCM = Single circuit module
- SZ = Single-zone (unit airflow)
- SZVAV = Single zone variable air volume
- TCI = Tracer communications module
- UCM = Unit control modules
- VAV = Variable air volume
- VCM = Ventilation control module
- VOM = Ventilation override module
- VSC = Variable speed compressor
- VSD = eFlex™variable speed drive compressor
- VSM = Variable speed module
- w.c. = Water column
- WCI = Wireless communication interface

Unit Description

Each Trane commercial, single-zone rooftop air conditioner ships fully assembled and charged with the proper refrigerant quantity from the factory.

An optional roof curb, specifically designed for the S_HL units is available from Trane. The roof curb kit must be field assembled and installed according to the latest edition of the curb installation guide.

Trane commercial rooftop units are controlled by a microelectronic control system that consists of a network of modules and are referred to as unit control modules (UCM). The acronym UCM is used extensively throughout this document when referring to the control system network.

These modules through Proportional/integral control algorithms perform specific unit functions which provide the best possible comfort level for the customer.

They are mounted in the control panel and are factory wired to their respective internal components. They receive and interpret information from other unit modules, sensors, remote panels, and customer binary contacts to satisfy the applicable request for economizing, mechanical cooling, heating, and ventilation. Refer to the following discussion for an explanation of each module function.

Rooftop Module (RTM—1U48 standard on all units)

The Rooftop Module (RTM) responds to cooling, heating, and ventilation requests by energizing the proper unit components based on information received from other unit modules, sensors, remote panels, and customer supplied binary inputs. It initiates supply fan, exhaust fan, exhaust damper, return fan, return damper, variable frequency drive output, and economizer operation based on that information.

Table 1. RTM resistance input vs. setpoint temperatures

RTM cooling or heating setpoint input used as source for ZONE temp setpoint (°F)	RTM cooling setpoint input used as source for SUPPLY AIR temp setpoint cooling (°F)	Resistance (Ohms) Max. Tolerance 5%
40	40	1084
45	45	992
50	50	899
55	55	796
60	60	695
65	65	597
70	70	500
75	75	403
80	80	305
n/a	85	208
n/a	90	111

Table 2. RTM resistance value vs. system operating mode

Resistance applied to RTM MODE input Terminals (Ohms) Max. Tolerance 5%	Constant Volume/SZVAV Units	
	Fan Mode	System Mode
2320	Auto	Off
4870	Auto	Cool
7680	Auto	Auto
10770	On	Off
13320	On	Cool
16130	On	Auto
19480	Auto	Heat
27930	On	Heat

Compressor Modules

(SCM & MCM—1U49 standard on all units)

The compressor modules, (Single Circuit & Multiple Circuit), upon receiving a request for mechanical cooling, energizes the appropriate compressors and condenser fans. It monitors the compressor operation through feedback information it receives from various protection devices.

Human Interface Module

(HI—1U65 standard on all units)

The human interface module enables the operator to adjust the operating parameters for the unit using its 16 key keypad. The 2 line, 40 character LCD screen provides status information for the various unit functions as well as menus for the operator to set or modify the operating parameters.

Heat Module

(1U50 used on heating units)

The Heat module, upon receiving a request for Heating, energizes the appropriate heating stages or strokes the Modulating Heating valve as required.

Modulating Dehumidification Module MDM

(Optional 1U107—used with Dehumidification Control)

The MDM supports specific control inputs and outputs for Modulating Dehumidification control including Modulating Reheat and Cooling valve control as well as the Reheat Pumpout Relay output.The Modulating Dehumidification control Algorithm provides control requests to the MDM to accomplish proper Dehumidification control.

Ventilation Override Module

(VOM—Optional 1U51)

Important: The ventilation override system should not be used to signal the presence of smoke caused by a fire as it is not intended nor designed to do so.

The Ventilation Override module initiates specified functions such as space pressurization, exhaust, purge, purge with duct pressure control, and unit off when any one of the five binary inputs to the module are activated. The compressors and condenser fans are disabled during the ventilation operation. If more than one ventilation sequence is activated, the one with the highest priority is initiated.

Variable Speed Module

(VSM—Optional 1U123)

The Variable Speed module used in eFlex variable speed units provides a 0-10VDC output analog speed signal to control the compressor VFD. Table 3 lists VSM output signal (VDC) and corresponding compressor speed (RPM) at 0%, 50% and 100% Intellipak command speeds (Spd %).

Table 3. VSM output signal (VDC)

Variable speed unit	Spd 0%		Spd 50%		Spd 100%	
	VDC	RPM	VDC	RPM	VDC	RPM
40T	0	1500	4.7	3632	9.5	5762
50T	0	1500	3.9	3271	7.9	5042
55T	0	1500	3.9	3271	7.9	5042
60T	0	1500	4.8	3660	9.6	5820
70T	0	1500	4.8	3660	9.6	5820

Note: voltages and speed +/- 1%

During Auto Run mode, the Intellipak command speed (Spd %) can be monitored at the HI. The 0-10VDC signal and compressor RPM is displayed on the TRV200 inverter keypad (1U128).

Figure 1. Display—TRV200 inverter keypad (1U128)

The VSM output signal can also be checked in Service Test mode. Compressor relays should be commanded off as shown in Figure 2, and the Spd% command can be changed at the HI. Then check the VSM output signal against Table 3. VSM output signal voltage is measured between terminals 53 and 55 at the VFD (3U119) input.

Figure 2. VSM output signal

```
Compressor Relays (MCM 1)
K11: OFF   Spd: 100 %  K3: OFF   K4: OFF
```

Fault Detection and Diagnostics (FDD)

The VSM is also used for FDD. The VSM will accept a 0-10Vdc actuator feedback position signal which will then be used to determine the state of Outside Air Damper system.

Interprocessor Communications Board

(IPCB—Optional 1U55 used with optional remote human interface)

The Interprocessor Communication Board expands communications from the rooftop unit UCM network to a remote human interface panel. DIP switch settings on the IPCB module for this application should be as follows:

- Switches 1 and 2 OFF
- Switch 3 ON

LonTalk/BACnet Communication Interface Module

(LCI/BCI—Optional 1U54/1U104—used on units with Trane ICS™ or Third party Building Automation Systems)

The LonTalk or BACnet Communication Interface modules expand communications from the unit UCM network to a Trane Tracer Summit or a 3rd party building automation system and allow external setpoint and configuration adjustment and monitoring of status and diagnostics.

Exhaust/Comparative Enthalpy Module

(ECEM—Optional 1U52 used on units with Statitrac and/or comparative enthalpy options)

The Exhaust/Comparative Enthalpy module receives information from the return air humidity sensor, the outside air humidity sensor, and the return air temperature sensor to utilize the lowest possible humidity level when considering economizer operation. In addition, it receives space pressure information which is used to maintain the space pressure to within the setpoint control band. Refer to Figure 4, p. 14 for the Humidity vs. Current input values.

Figure 3. Humidity vs. current (ECEM return RH, RTM outdoor RH)

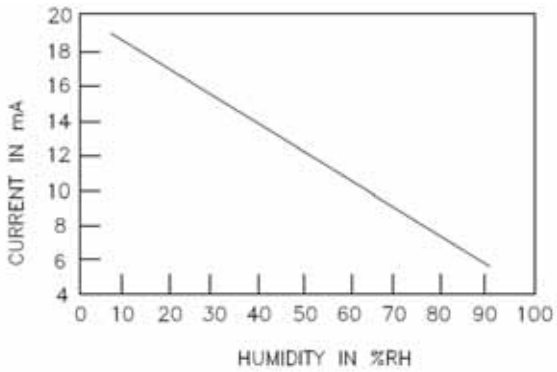

Figure 4. Humidity vs. current (RTM space humidity)

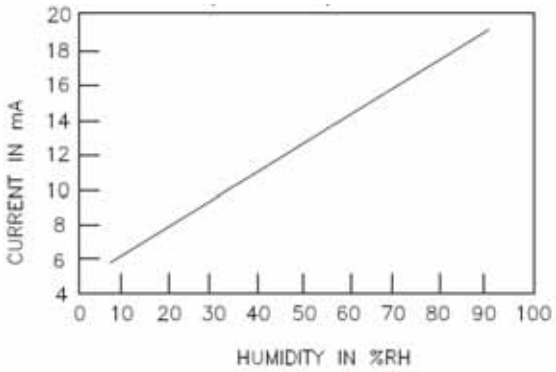

Ventilation Control Module

(VCM—Optional 3U218 used with Traq Fresh Air Measurement and/ or CO2 Sensor)

The Ventilation Control Module (VCM) is located in the filter section of the unit and is linked to the unit's UCM network. Using a "velocity pressure" sensing ring located in the outside air section, allows the VCM to monitor and control the quantity of outside air entering the unit to a minimum airflow setpoint.

An optional temperature sensor can be connected to the VCM which enables it to control a field-installed outside air preheater.

If the unit has a VCM, an optional CO_2 sensor can be connected to the unit to the unit for CO_2 reset control. CO_2 reset permits the unit to reduce the amount of outside air entering the unit from the Design OA (Design OA damper%) to the DCV OA (DCV Minimum damper%) based on the space or return CO_2 level. The following table lists the possible airflow range per unit size.

Table 4. Outside air flow range with Traq Sensor

Unit (AC/EC)	CFM
20 & 25, 24 & 29 ton	0-14000
30/36 ton	0-17000
40/48 ton	0-22000
50/59, 55 ton	0-28000
60-75, 73-89 ton	0-33000
90-130 ton	0-46000

The velocity pressure transducer/solenoid assembly is illustrated below. Refer to the "Traq Sensor Sequence of Operation" section for VCM operation.

Figure 5. Velocity pressure transducer/solenoid assembly

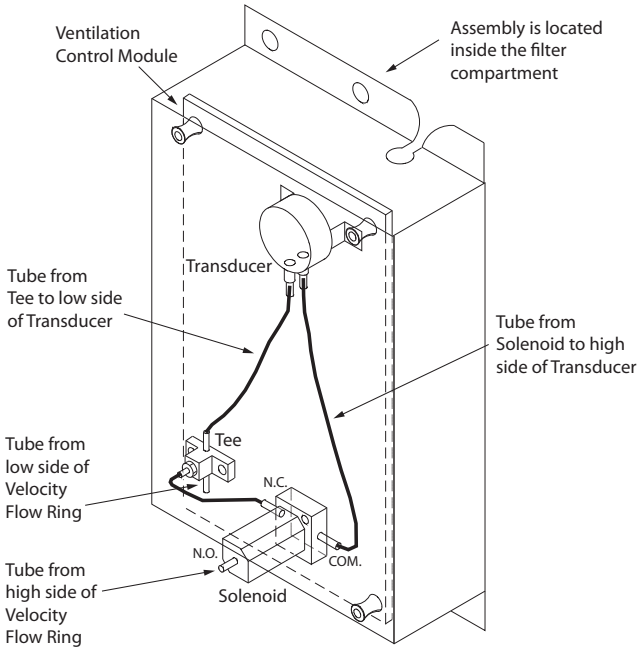

Generic Building Automation System Module

(GBAS—Optional 1U51 used with non-Trane building control systems; 0-5 or 0-10 VDC)

The Generic Building Automation System (GBAS) module allows a non-Trane building control system to communicate with the rooftop unit and accepts external setpoints in form of analog inputs for cooling, heating, supply air pressure, and a binary Input for demand limit. Refer to the "Field Installed Control Wiring" section for the input wiring to the GBAS module and the various desired setpoints with the corresponding DC voltage inputs for both VAV and CV applications.

Phase Monitor (1U3) Standard on 20-89 ton

Continuously monitors line voltage to protect against phase, loss, imbalance and reversal. If a fault is found with the supply voltage a LED on the phase monitor will indicate a fault and a unit External Auto Stop is activated through the controls. 75-130 ton units have a phase monitor on each compressor.

Multipurpose Module

MPM (Optional 1U105 used on units with Return Fan or with Evaporative Condenser)

The Multipurpose Module (MPM) receives information from the Return Plenum Pressure sensor and provides for Return Fan control to maintain this pressure to the Active Return Plenum Pressure Setpoint and Deadband. The liquid line pressure sensor inputs for the refrigeration circuits are received through the MPM in support of head pressure control on Evaporative condenser units.

Input Devices & System Functions

The descriptions of the following basic Input Devices used within the UCM network are to acquaint the operator with their function as they interface with the various modules. Refer to the unit's electrical schematic for the specific module connections.

Constant Volume (CV), Single Zone Variable Air Volume (SZVAV) & Variable Air Volume (VAV) Sensors & Controls

Supply Air Temperature Sensor (3RT9)

This analog input device monitors the supply air temperature for the following:

- Supply air temperature control (used with discharge temperature control)
- Supply air temperature reset (used with discharge temperature control)
- Supply air temperature low limiting (used with discharge temperature control)
- Supply air tempering

It is mounted in the supply air discharge section of the unit and is connected to the RTM (1U48).

Return Air Temperature Sensor (3RT6)

This analog input device is used with a return humidity sensor when the comparative enthalpy option is ordered. It monitors the return air temperature and compares it to the outdoor temperature to establish which temperature is best suited to maintain the cooling requirements. It is mounted in the return air section and is connected to the ECEM (1U52).

Entering Evaporator Temperature Sensor (3RT28 and 3RT29)

This analog input device is used with the Leaving Evaporator Temp sensor to provide Low Charge Protection of the refrigerant systems. The difference in these two temperatures will be monitored during compressor operation and compressor circuits will be shut down if this difference exceeds a human interface selectable setpoint value.

Leaving Evaporator Temperature Sensor (3RT14 and 3RT15)

An analog input device used to monitor the refrigerant temperature inside the evaporator coil to prevent coil freezing. It is attached to the suction line near the evaporator coil and is connected to the MCM. It is factory set for 30°F and has an adjustable range of 25°F to 35°F. The compressors are staged OFF as necessary to prevent icing. After the last compressor stage has been turned OFF, the compressors will be allowed to restart once the evaporator temperature rises 10°F above the "coil frost cutout temperature" and the minimum three minute OFF time has elapsed.

Filter Switch (3S21 and 3S58)

This binary input device measures the pressure differential across the unit filters. It is mounted in the filter section and is connected to the RTM (1U48). A diagnostic SERVICE signal is sent to the remote panel if the pressure differential across the filters is at least 0.5" w.c. The contacts will automatically open when the pressure differential across the filters decrease to 0.4" w.c. The switch differential can be field adjusted between 0.17" w.c. to 5.0" w.c. ± 0.05" w.c.

Supply and Exhaust Airflow Proving Switches (3S68 and 3S69)

3S68 is a binary input device used to signal the RTM when the supply fan is operating. It is located in the supply fan section of the unit and is connected to the RTM (1U48). During a request for fan operation, if the differential switch is detected to be open for 40 consecutive seconds, the following occurs:

- Compressor operation is turned OFF
- Heat operation is turned OFF
- The request for supply fan operation is turned OFF and locked out
- Exhaust dampers (if equipped) are "closed"
- Economizer dampers (if equipped) are "closed"
- A manual reset diagnostic is initiated

3S69 is a binary input device used on all rooftop units equipped with an exhaust fan. It is located in the exhaust/return fan section of the unit and is connected to the RTM (1U48). During a request for fan operation, if the differential switch is detected to be open for 40

consecutive seconds, the economizer is closed to the minimum position setpoint, the request for exhaust fan operation is turned OFF and locked out, and a manual reset diagnostic is initiated. The fan failure lockout can be reset as follows:

- At the human interface located in the unit's control panel
- By Tracer™
- By cycling the control power to the RTM (1S70 Off/On)

Lead-Lag

Is a standard mode of operation on 20 thru 130 ton units. It alternates the starting between the first compressor of each refrigeration circuit. On 40 to 89 ton units only the compressor banks will switch, not the order the compressors within a bank, providing the first compressor in each circuit had been activated during the same request for cooling. Lead lag is not available with variable speed compressor.

Supply and Exhaust/Return Fan Circuit Breakers (with 1CB1 and 1CB2)

The supply fan and exhaust fan motors are protected by circuit breakers 1CB1 and 1CB2 respectively for 208 -230 V applications. They will trip and interrupt the power supply to the motors if the current exceeds the breaker's "must trip" value. For 460 -575 V applications, fan motors will be protected with manual motor protectors. The rooftop module (RTM) will shut all system functions OFF when an open fan proving switch is detected.

Manual Motor Protectors (380V-575V Only)

Manual motor protectors will be used as branch circuit protection for compressors and supply fan motors. These devices are capable of providing both overload and short-circuit protection. Before operating, the manual motor protector must be switched with the rotary on/off switch to the ON position and the overload setpoint dial must be set to the appropriate rating of the motor.

Important: In order to avoid nuisance trips, the overload setpoint dial must be adjusted to the following calculated value:
Overload Setting = (Motor FLA)
Overload Setting = (Compressor RLA) x 1.12

Return Plenum Pressure High Limit

The Return Plenum Pressure High Limit Setpoint has a non-adjustable value of 3.5 iwc. When the return plenum pressure exceeds the Return Plenum Pressure High Limit for more than 1 second, a "Return Pressure shutdown" signal is sent, and an automatically resetting diagnostic is set. After the return fan is off, the Return Pressure Shutdown signal is cancelled. The unit will not be allowed to restart within 15 seconds of shutdown. Three consecutive occurrences of the Return Plenum Pressure exceeding the Return Plenum Pressure Limit will cause a manual reset diagnostic. The occurrence counter will be reset every time the unit goes through a reset, transitions from Stop to Auto, or transitions into and out of Occupied or Unoccupied control.

Low Pressure Control (LPC)

LPC is accomplished using a binary input device. LP cutouts are located on the suction lines near the scroll compressors. The LPC contacts are designed to close when the suction pressure exceeds 41± 4 psig. If the LP control is open when a compressor is requested to start, none of the compressors on that circuit will be allowed to operate. They are locked out and a manual reset diagnostic is initiated.

The LP cutouts are designed to open if the suction pressure approaches 25± 4 psig. If the LP cutout opens after a compressor has started, all compressors operating on that circuit will be turned off immediately and will remain off for a minimum of three minutes. If the LP cutout trips four consecutive times during the first three minutes of operation, the compressors on that circuit will be locked out and a manual reset diagnostic is initiated.

Saturated Condenser Temperature Sensors (2RT1 and 2RT2)

These analog input devices are mounted inside a temperature well located on a condenser tube bend. They monitor the saturated refrigerant temperature inside the condenser coil and are connected to the SCM/MCM (1U49). As the saturated refrigerant temperature varies due to operating conditions, the condenser fans are cycled ON or OFF as required to maintain acceptable operating pressures. For evaporative condensers, this value is determined by the MPM which converts a pressure to a temperature value that is sent to the MCM to be used for head pressure control.

Head Pressure Control (HPC)

This is accomplished using one saturated refrigerant temperature sensor per refrigeration circuit. During a request for compressor operation, when the condensing temperature rises above the "lower limit" of the control band, the Compressor Module (SCM/MCM) starts sequencing condenser fans ON. If the operating fans can not bring the condensing temperature to within the control band, more fans are turned on.

As the saturated condensing temperature approaches the lower limit of the control band, fans are sequenced OFF. The minimum "On/Off" time for condenser fan staging is 5.2 seconds. If the system is operating at a given fan stage below 100% for 30 minutes and the saturated condensing temperature is above the "efficiency check point" setting, a fan stage will be added. If the saturated condensing temperature falls below the "efficiency check point" setting, the fan control will remain at the present operating stage. If a fan stage cycles four times within a 10 minute

period, the control switches from controlling to the “lower limit” to a temperature equal to the “lower limit” minus the “temporary low limit suppression” setting. It will utilize this new “low limit” temperature for one hour to reduce condenser fan short cycling.

For Evaporative Condensing units, Head pressure is monitored with pressure transducers attached to the Saturated Condensing line and converted to a temperature by the MPM. This temperature is used to control the variable speed fan and control the sump pump. When the temperature rises above the Upper Limit (120F) the Sump Pump is energized. If the Condensing Temperature drops below the Lower Limit (70F) the Sump Pump is de-energized.

High Pressure Controls (HPC)

High Pressure controls are located on the discharge lines near the scroll compressors. They are designed to open when the discharge pressure approaches 650 ± 10 psig. The controls reset automatically when the discharge pressure decreases to approximately 550 ± 10 psig. However, the compressors on that circuit are locked out and a manual reset diagnostic is initiated after the fourth occurrence of a high pressure condition.

If the HPC opens after a compressor has started, all compressors on that circuit will be turned off immediately and will remain off for a minimum of 15 minutes. If the HPC trips four consecutive times during the first 3 minutes of operation, the compressors on that circuit will be locked out and a manual reset diagnostic is initiated.

Variable speed compressor circuits use a different HPC switch with 24 VDC contacts input to the inverter. Otherwise, the variable speed HPC circuit is functionally the same as described above.

High Compressor Pressure Differential Protection

20-75T units provides High Compressor Pressure Differential protection for the equipment , also referred to as Low VI compressor protection. This protection is active on a per circuit basis and prevents scroll involute stresses from exceeding levels that could cause compressor damage.

Two levels of control are implemented to support the High Compressor Pressure Differential protection: Limit and Diagnostic trips.

During a Limit trip, the controller will determine when the pressure differential has exceeded predetermined limits and will then take action by either limiting the compressor capacity or by unloading/reducing the compressor capacity on that circuit. Once the pressure differential returns to an acceptable level, the circuit will become unlimited if still needed for temperature control.

During a Diagnostic trip, the controller will determine when the pressure differential has exceeded acceptable levels for the equipment and will then de-energize the circuit completely. Once the pressure differential returns to an acceptable level, the circuit will be allowed to re-energize if still needed for temperature control. If four Diagnostic trips occur within the same request for compressor operation, the circuit will be locked out on a manual reset diagnostic.

If actively limiting or controlling compressor outputs OFF due to a High Compressor Pressure Differential event, the Limit/Diagnostic event will be found under Status/ Compressor Status Submenu at the human interface . During a diagnostic trip a diagnostic will be indicated at the human interface .

Outdoor Air Humidity Sensor (3U63)

This is an analog input device used on applications with 100% economizer. It monitors the outdoor humidity levels for economizer operation. It is mounted in the outside air intake section and is connected to the RTM (1U48).

Return Air Humidity Sensor (3U64)

This is an analog input device used on applications with the comparative enthalpy option. It monitors the return air humidity level and compares it to the outdoor humidity level to establish which conditions are best suited to maintain the cooling requirements. It is mounted in the return air section and is connected to the ECEM (1U52).

Space/Duct Humidity Sensor (5U108)

Analog input device used on applications with modulating dehumidification option and/or humidification field-installed option. It is used to monitor the humidity level in the space and for comparison with the dehumidification and humidification setpoints to maintain space humidity requirements. It is field mounted in the space and connected to the RTM (1TB16).

Low Ambient Option 0° Fahrenheit (2U84, 2U85)

Air cooled units ordered with Low Ambient 0° Fahrenheit will control the low ambient dampers (2U84, 2U85) to the programmable Low Ambient Control Point based on saturated condenser temperature during compressor operation.

Status/Annunciator Output

This is an internal function within the RTM (1U48) module that provides the following:

- Diagnostic and mode status signals to the remote panel (LEDs) and to the human interface
- Control of the binary Alarm output on the RTM
- Control of the binary outputs on the GBAS module to inform the customer of the operational status and/or diagnostic conditions

Low Ambient Compressor Lockout

Utilizes an analog input device. When the system is configured for low ambient compressor lockout, the compressors are not allowed to operate if the temperature of the outside air falls below the lockout setpoint. When the temperature rises 5°F above the lockout setpoint, the compressors are allowed to operate. The setpoint for units without the low ambient option is 50°F. For units with the low ambient option, the setpoint is 0°F. The setpoints are adjustable at the human interface inside the unit control panel.

Space Pressure Transducer (3U62)

This is an analog input device that modulates the exhaust damper or exhaust VFD to keep the space pressure within the building to a customer designated control band. It is mounted in the filter section just above the exhaust damper actuator and is connected to the ECEM (1U52). Field-supplied pneumatic tubing must be connected between the space being controlled and the transducer assembly.

Morning Warm-Up—Zone Heat (CV and VAV)

When a system changes from an unoccupied to an occupied mode, or switches from STOPPED to AUTO, or power is applied to a unit with the MWU option, the heater in the unit or external heat will be brought on if the space temperature is below the MWU setpoint. The heat will remain on until the temperature reaches the MWU setpoint. If the unit is VAV, then the VAV box/unocc relay will continue to stay in the unoccupied position and the VFD output will stay at 100% during the MWU mode. When the MWU setpoint is reached and the heat mode is terminated, then the VAV box/unocc relay will switch to the occupied mode and the VFD output will be controlled by the duct static pressure. During Full Capacity MWU the economizer damper is held closed for as long as it takes to reach setpoint. During Cycling Capacity MWU the economizer damper is allowed to go to minimum position after one hour of operation if setpoint has not been reached.

Compressor Motor Winding Thermostats

CSHD compressors (20-70 ton) Air-Cooled and (24-80 ton) Evaporative Condensers

The compressors contains an internal line break overload which stops the compressors under a number of operating conditions that cause excessive motor temperature. These include rapid cycling, loss of charge, abnormally high suction temperatures, excessive amperage, phase loss and low voltage

CSHN Compressors (75 to 130 ton) Air-Cooled and (89 ton) Evaporative Condensers

PTC sensors are embedded in the motor windings of each Scroll compressor. These sensors are wired to the protection module which protects the motor from over temperature that can occur under a number of abnormal operating conditions. These include rapid cycling, loss of charge, abnormally high suction temperatures, low voltage and excessive amperage.

During a request for compressor operation, if the Compressor Module (SCM) detects a problem outside of normal parameters, it turns any operating compressor(s) in that circuit OFF, locks out all compressor operation for that circuit, and initiates a manual reset diagnostic.

VZH Variable Speed Compressors

Over current and over torque protection for VZH compressors are provided by the TRV200 inverter. VZH over temperature protection is not required.

Freeze Avoidance

Freeze Avoidance is a feature which helps prevent freezing of hydronic heat coils and avoiding nuisance hydronic heat freezestat trips. This is accomplished by opening inactive hydronic heat valve(s) at low ambient temperatures.Typically, when the unit is in a mode where the supply fan is off, the OA temperature is monitored. If it falls below 45 ºF (5 degrees above the freezestat), the hydronic heat valve(s) are opened to the Standby Freeze Avoidance Position. When the OA temperature rises above 47 ºF, occupied mode is requested, or the supply fan is requested ON the hydronic heat valve(s) release to normal control.

When the supply fan is commanded on, the OA dampers will remain closed for one minute to remove the heat from the hydronic heating coil. This prevents freezestat trips and falsely loading the supply air temperature causing premature compressor operation. This function is disabled if the Standby Freeze Avoidance Position is set to 0%.

Supply Air Temperature Low Limit

Uses the supply air temperature sensor input to modulate the economizer damper to minimum position in the event the supply air temperature falls below the occupied heating setpoint temperature.

Freezestat (4S12)

This is a binary input device used on units with Hydronic Heat. It is mounted in the heat section and connected to the Heat Module (1U50). If the temperature of the air entering the heating coil falls to 40°F, the normally open contacts on the freezestat closes, signaling the Heat Module (1U50) and the Rooftop Module (RTM) to:

- Drive the Hydronic Heat Actuator (4U15) to the full open position

- Turn the supply fan OFF
- Close the outside air damper
- Turn ON the SERVICE light at the Remote Panel
- Initiates a “Freezestat” diagnostic to the human interface

High Duct Temp Thermostats (Optional 3S16, 3S17)

These are binary input devices used with a Trane Communication Interface Module (TCI). They provide “high limit” shutdown of the unit and requires a manual reset. They are factory set to open if the supply air temperature reaches 240°F, or the return air temperature reaches 135°F. Once tripped, the thermostat can be reset by pressing the button located on the sensor once the air temperature has decreased approximately 25°F below the cutout point.

Compressor Circuit Breakers (1CB8, 1CB9, 1CB10, 1CB11)

The Scroll Compressors are protected by circuit breakers for 208 to 230 volt units which interrupt the power supply to the compressors if the current exceeds the breakers “must trip” value. For 460 -575 volt units the Scroll compressors will be protected with Manual Motor protectors. During a request for compressor operation, if the Compressor Module detects a problem outside of it’s normal parameters, it turns any operating compressor(s) on that circuit OFF, locks out all compressor operation for that circuit, and initiates a manual reset diagnostic.

Constant Volume (CV) Units

Zone Temperature—Cooling

Relies on input from a sensor located directly in the space, while a system is in the occupied “Cooling” mode. It modulates the economizer (if equipped) and/or stages the mechanical cooling “On and Off” as required to maintain the zone temperature to within the cooling setpoint deadband.

Zone Temperature—Heating

Relies on input from a sensor located directly in the space, while a system is in the occupied “Heating” mode or an unoccupied period, to stage the heat “on and off” or to modulate the heating valve (hydronic heat only) as required to maintain the zone temperature to within the heating setpoint deadband. The supply fan will be requested to operate any time there is a requested for heat. On gas heat units, the fan will continue to run for 60 seconds after the furnace is turned off.

Supply Air Tempering

On CV Zone Temperature Control units, if the supply air temperature falls 10°F below the zone temperature setpoint up to half of the available heat capacity will be brought on until the supply air temperature reaches 10°F above zone temperature setpoint.

Single Zone Variable Air Volume (SZVAV) Only

The IntelliPak controls platform supports Single Zone VAV as an optional unit control type in order to meet ASHRAE 90.1. The basic control is a hybrid VAV/CV configured unit that provides discharge temperature control to a varying discharge air temperature target setpoint based on the space temperature and/or humidity conditions. Concurrently, the unit will control and optimize the supply fan speed to maintain the zone temperature to a zone temperature setpoint.

Supply Fan VFD Control

Single Zone VAV units are equipped with a VFD-controlled supply fan which is controlled via a 0-10VDC signal from the Rooftop Module (RTM). With the RTM supply fan output energized and the RTM VFD output at 0VDC, the fan speed output is 37% from the VFD by default; and at 10VDC the fan speed output is 100%. The control scales the VDC output from the RTM linearly to control fan speed output between 37-100%. The VFD will modulate the supply fan motor speed, accelerating or decelerating as required to maintain the zone temperature to the zone temperature setpoint. When subjected to high ambient return conditions the VFD will reduce its output frequency to maintain operation. Bypass control is offered to provide full nominal airflow in the event of drive failure.

Ventilation Control

Units configured for Single Zone VAV control require special handling of the OA Damper Minimum Position control in order to compensate for the non-linearity of airflow associated with the variable supply fan speed and damper combinations. Units configured for TRAQ with or without DCV use the same sequence of operation as VAV or CV units.

Space Pressure Control

For SZVAV units configured with or without Space Pressure Control (StatiTrac), the Exhaust Enable Setpoint (based on the outside air damper position) is used when the Supply Fan is at 100%. A Target setpoint is internally calculated when the supply fan is at less than 100%. The exhaust fan is allowed to start when the Target setpoint is reached. If the Exhaust Enable Setpoint is set to 0%, then the exhaust fan will be allowed to start whenever the Active Minimum position is reached regardless of supply fan speed.

Occupied Cooling Operation

For normal cooling operation, cooling capacity will be staged or modulated in order to meet the calculated discharge air target setpoint. If the current active cooling

capacity is controlling the discharge air within the deadband, no additional cooling capacity change will be requested. As the Discharge Air Temperature rises above the deadband, the algorithm will request additional capacity as required (additional compressors or economizer). As the Discharge Air Temperature falls below the deadband, the algorithm will request a reduction in active capacity.

Default Economizer Operation

By default, the unit will be setup to optimize the minimum supply fan speed capability during Economizer Only operation. If the economizer is able to meet the demand alone, due to desirable ambient conditions, the supply fan speed will be allowed to increase above the minimum prior to utilizing mechanical cooling if discharge air setpoint falls below the discharge air Lower Limit (Cooling) setpoint.

Unoccupied Mode

In Unoccupied mode the unit will utilize setback setpoints, 0% Minimum OA Damper position, and Auto Fan Mode operation as on normal CV units. The Supply Fan speed, and cooling and modulating types of heat, will be controlled to the discharge air target setpoint as is done during occupied periods. The Supply fan speed during staged heat control will be forced to 100% as on normal CV units.

Occupied Heating Operation

If the unit has 2 Stage Gas or Electric Heat, the unit will drive the supply fan to maximum flow and stage heating to control to the Zone Heating Setpoint. If the unit has Modulating Gas or Hydronic heat, the supply fan VFD will modulate as needed. On an initial call for heating, the supply fan will drive to the minimum heating airflow. On an additional call for heating, the heat will control in order to meet the calculated discharge air target setpoint. As the load in the zone continues to request heat operation, the supply fan will ramp-up while the control maintains the heating discharge air temperature. If the unit has Modulating Gas or Hydronic heat, heating can be configured for either the energy saving SZVAV Heating solution as described above, or with the supply fan required to ramp to 100% during heating.

Compressor (DX) Cooling

Compressor control and protection schemes will function identical to that of a traditional unit. Normal compressor proving and disable input monitoring will remain in effect as well as normal 3-minute minimum on, off, and inter-stage timers. Also, all existing head pressure control schemes will be in effect.

Cooling Sequence

If the control determines that there is a need for active cooling capacity in order to meet the calculated discharge air target setpoint, the unit will begin to stage or modulate compressors accordingly. Once the discharge air target setpoint calculation has reached the Minimum Setpoint and compressors are being utilized to meet the demand, the control will begin to ramp the supply fan speed up toward 100% to meet any additional cooling demand.

As the cooling load in the zone decreases the zone cooling algorithm will reduce the speed of the fan down to minimum per compressor stage and control the compressors accordingly. As the compressors begin to stage or modulate back, the supply fan speed will fall back to the Cooling Stage's associated minimum fan speed, but not below. As the load in the zone continues to drop, cooling capacity will be reduced in order to maintain the discharge air within the ± ½ discharge air target deadband.

Variable Air Volume (VAV) Units

Occupied Heating—Supply Air Temperature

When a Discharge Temperature Control unit is equipped with "Modulating Heat", and the system is in an occupied mode, and the field-supplied changeover relay contacts (5K87) have closed, the supply air temperature will be controlled to the customer specified supply air heating setpoint. It will remain in the heating status until the changeover relay contacts are opened.

Occupied Cooling—Supply Air Temperature

When a Discharge Temperature Control unit is in the occupied mode, the supply air temperature will be controlled to the customers specified supply air cooling setpoint by modulating the economizer and/or staging the mechanical cooling "On and Off" as required. The changeover relay contacts must be open on units with "Modulating Heat" for the cooling to operate.

Daytime Warm-up (VAV Only)

On Discharge Temperature Control units equipped with heat, if the zone temperature falls below the daytime warm-up initiate temperature during the occupied mode, the system will switch to full airflow. During this mode, the VAV box/unocc relay, RTM K3, will be energized (this is to signal the VAV boxes to go to 100%). After the VAV box max stroke time has elapsed (factory set at 6 minutes), the VFD output will be set to 100%. The airflow will be at 100% and the heat will be turned on to control to the occupied heating setpoint. When the zone temperature reaches the daytime warm-up termination setpoint, the heat will be turned off, the K3 relay will be de-energized, releasing the VAV boxes, the VFD output will go back to duct static pressure control and the unit will return to discharge air control. If the occ zone heating setpoint is less than the DWU terminate setpoint, the heat will turn off when the occ zone heat setpoint is reached, but it will stay in DWU mode and cycle the heat to maintain setpoint.

Unoccupied Heating—Zone Temperature

When a Discharge Temperature Control unit is equipped with gas, electric, or hydronic heat and is in the unoccupied mode, the zone temperature will be controlled to the default or customer provided setpoint. During an unoccupied mode for a VAV unit, the VAV box/unocc relay will be in the unoccupied position and the VFD output will be at 100%. This means that if there is a call for heat (or cool) and the supply fan comes on, it will be at full airflow and the VAV boxes in the space will need to be 100% open as signaled by the VAV box/unocc relay.

Unoccupied Cooling—Zone Temperature

When the unit is in the unoccupied mode, the zone temperature will be controlled to the default or customer provided unoccupied cooling setpoint. During an unoccupied mode for a VAV unit, the VAV box/unocc relay will be in the unoccupied position and the VFD will be at 100%. On units with a VSPD Compressor, during Unoccupied Cooling operation the VSPD Compressor will be controlled at its 100% capacity as applied to the unit. The VSPD Compressor will be staged On/Off as a standard staged compressor.

Supply Air Tempering

On Discharge Temperature Control units equipped with "Modulating Heat", if the supply air temperature falls below the supply air temperature bottom deadband, the hydronic or modulating gas heat valve will modulate to maintain the supply air temperature to within the low end of the setpoint deadband.

Figure 6. Transducer voltage output vs. pressure input (supply, return, space pressure)

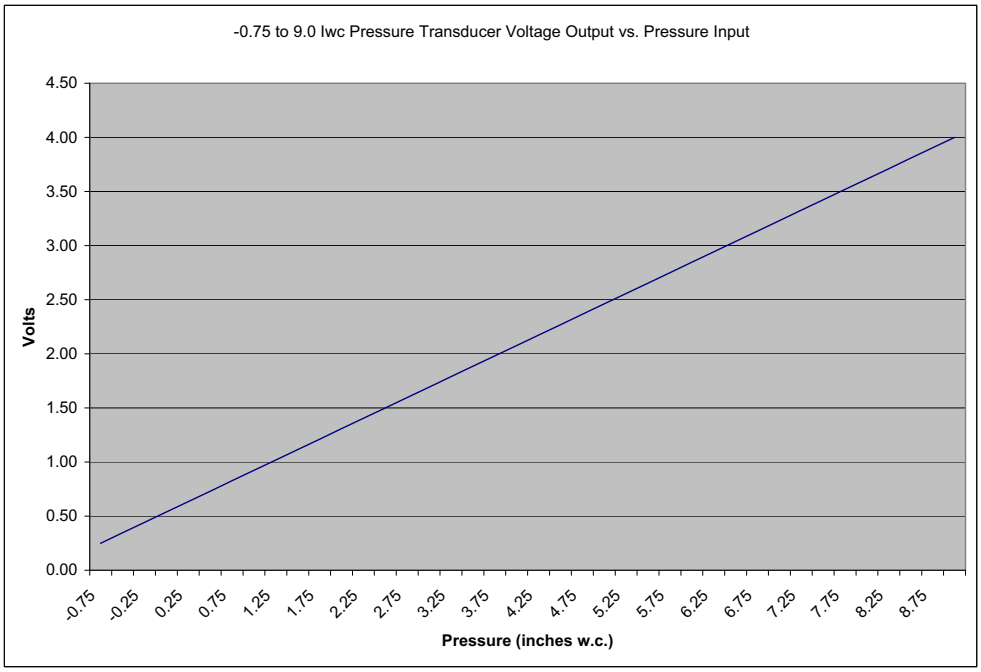

Supply Duct Static Pressure Control (Occupied)

The RTM relies on input from the duct pressure transducer when a unit is equipped with a Variable Frequency Drive. The unit controls will raise or lower the supply fan speed to maintain the supply duct static pressure to within the static pressure setpoint deadband. Figure 6 shows the pressure transducer output voltage relationship to input pressure. The unit is comparing supply duct pressure to ambient (outside) pressure. The pressure transducer input is factory piped to measure the pressure in the discharge section of the unit. Refer to Figure 33, p. 50 to see how the transducer tubing is connected.

Supply Duct Static Pressure Control (Occupied)

The RTM relies on input from the duct pressure transducer when a VAV unit is equipped with a Variable Frequency Drive. This input allows the unit to control the supply fan speed in order to maintain the supply duct static pressure to within the static pressure setpoint deadband.

Direct Drive Plenum (DDP) Supply Fan Option

DDP supply fans are positioned down stream of the fan board. DDP option includes a grate welded in the unit discharge opening. 20-55 ton sizes are single fan, 60-75 ton sizes (shown) have two fan assemblies.

Figure 7. DDP supply fan

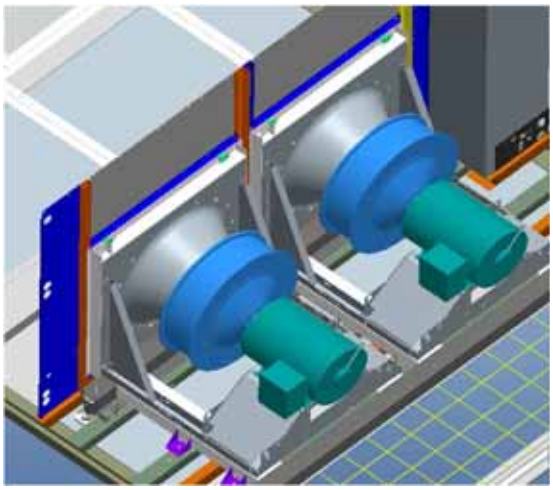

Figure 8. Unit component layout and "ship with" locations

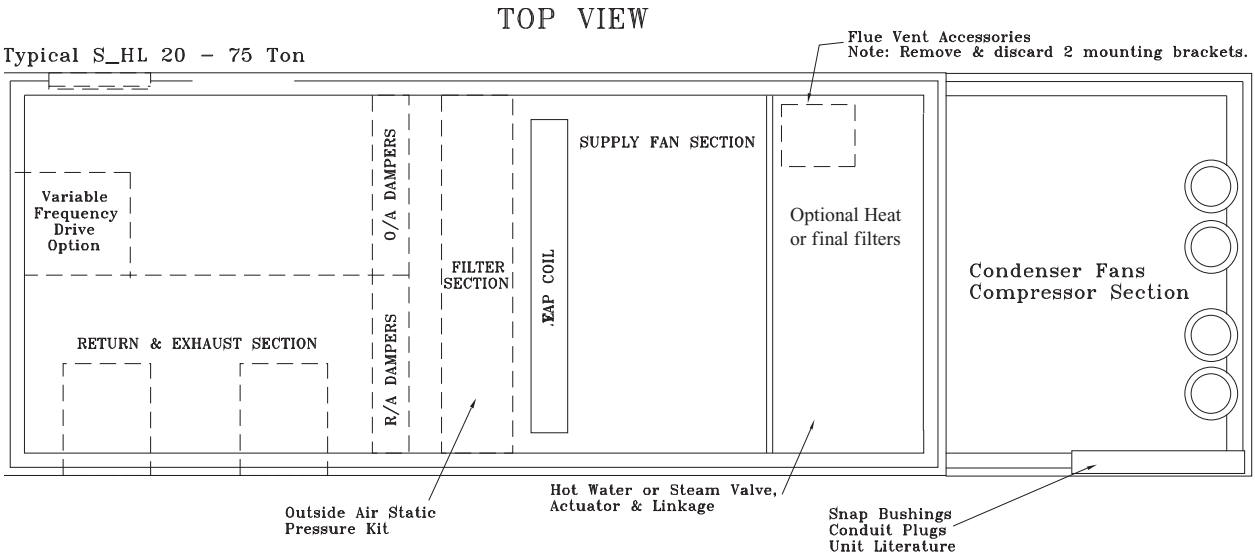

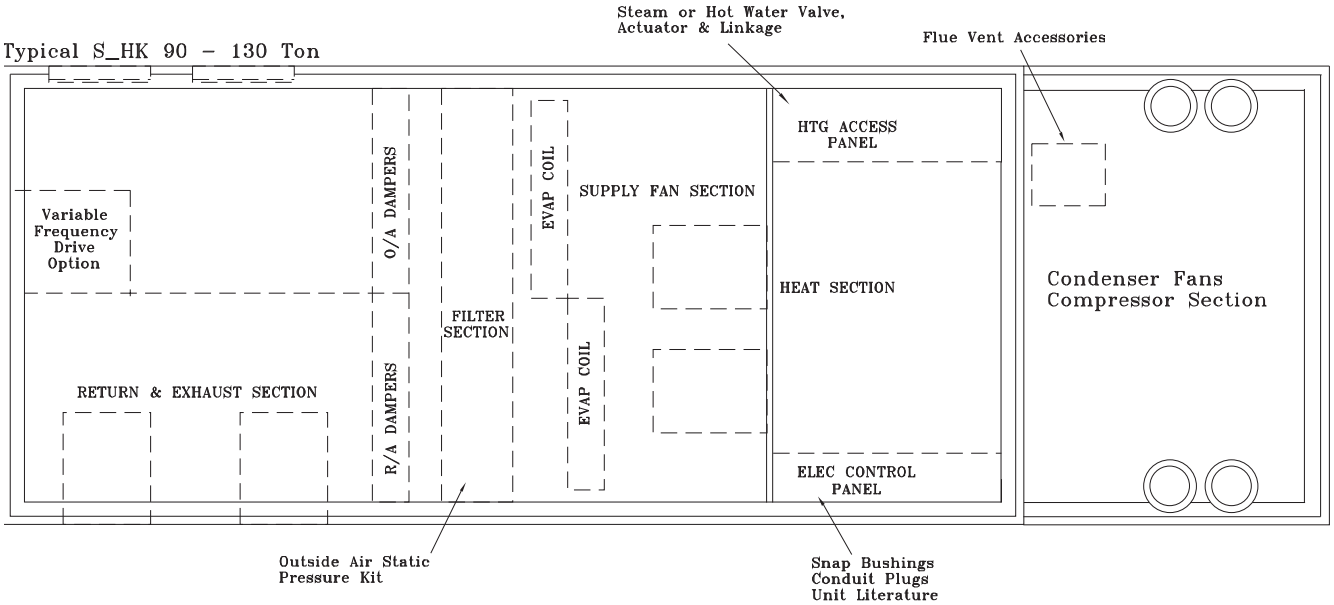

Space Temperature Averaging

Space temperature averaging for Constant Volume applications is accomplished by wiring a number of remote sensors in a series/parallel circuit.

The fewest number of sensors required to accomplish space temperature averaging is four. The Space Temperature Averaging with Multiple Sensors figure illustrates a single sensor circuit (Single Zone), four sensors wired in a series/parallel circuit (Four Zone), nine sensors wired in a series/parallel circuit (Nine Zone). Any number squared, is the number of remote sensors required.

Wiring termination will depend on the type of remote panel or control configuration for the system. Refer to the wiring diagrams that shipped with the unit.

Figure 9. Space temperature averaging

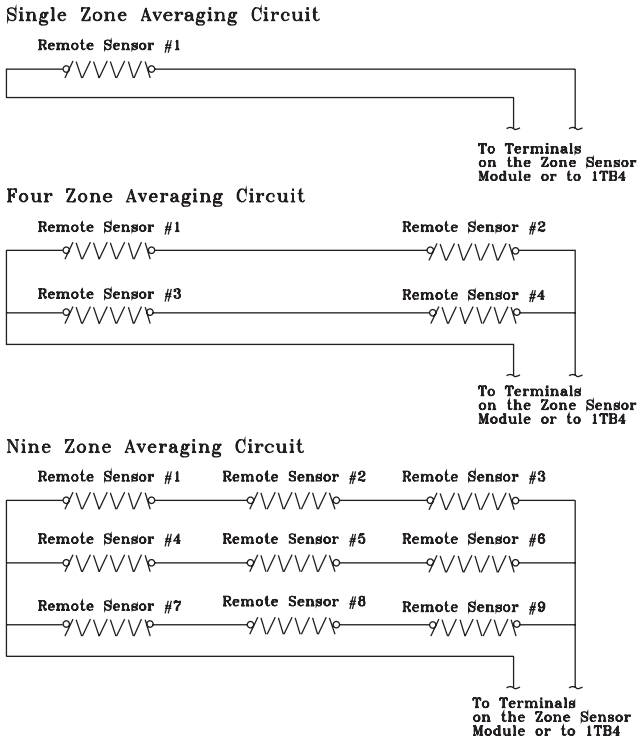

Space Temperature Averaging with Multiple Sensors Unit Control Modules (UCM)

Unit control modules are microelectronic circuit boards designed to perform specific unit functions. These modules through proportional/integral control algorithms provide the best possible comfort level for the customer. They are mounted in the control panel and are factory wired to their respective internal components. They receive and interpret information from other unit modules, sensors, remote panels, and customer binary contacts to satisfy the applicable request for economizing, mechanical cooling, heating, and ventilation. Figure 10 and Figure 11, p. 26 illustrate the typical location of each "1U" designated module.

Figure 10. Control module locations for 20 to 36 ton units

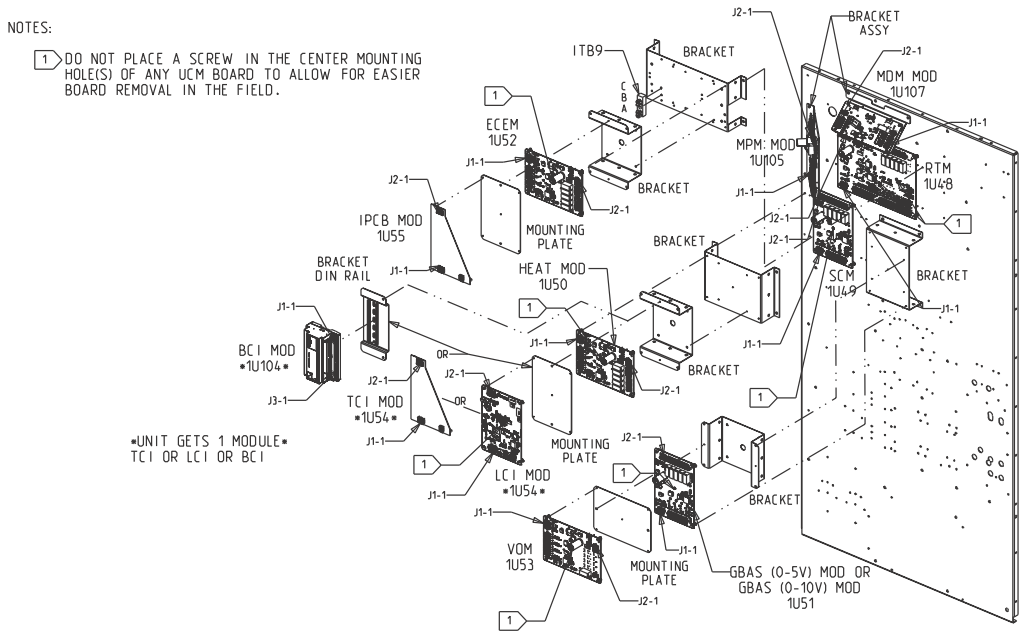

Figure 11. Control module locations for 40 to 89 ton units

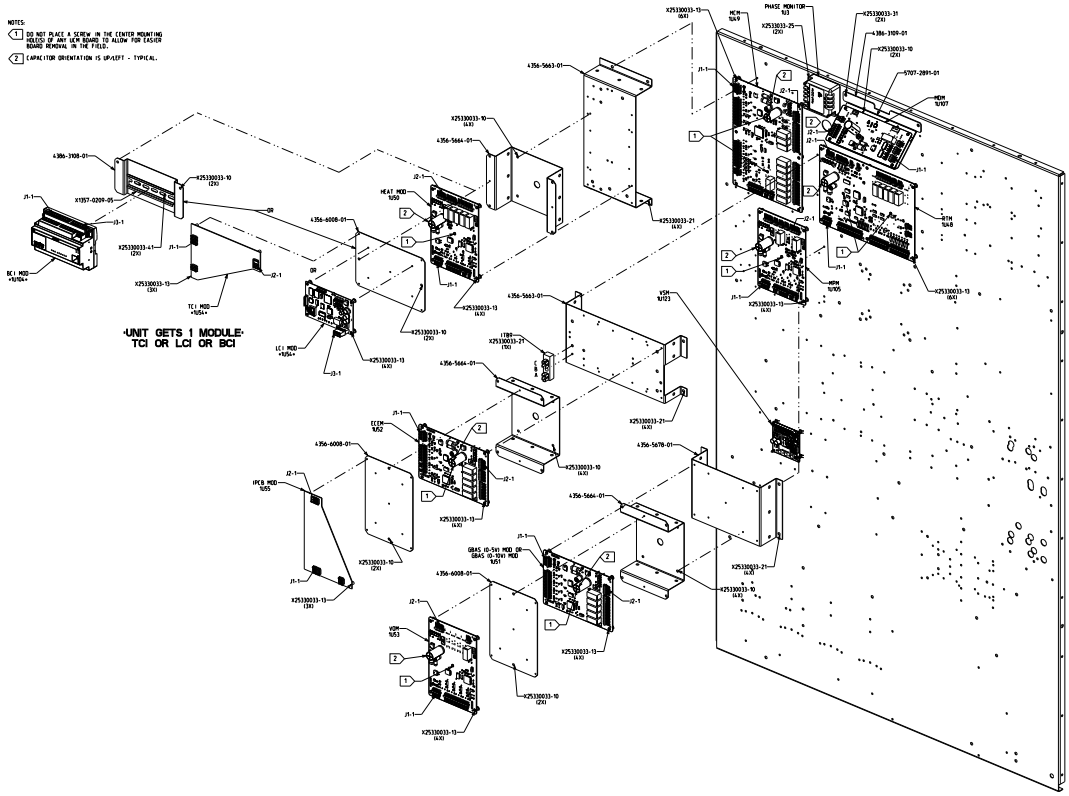

eFlex™ Variable Speed Compressor Staging

Note: The eFlex variable speed compressor can be manually controlled only in service test mode through the Intellipak controller human interface. The TRV200 inverter keypad has been programmed purposely to provide stop, reset, and diagnostics functions only. This is to prevent bypass of compressor protection functions provided by the Intellipak control logic.

Figure 12, p. 27 generally describes how the Intellipak controller sequences the eFlex variable speed compressor as building load increases. It is assumed that the unit is equipped with an economizer.

At low building loads, the economizer will often meet the building load and compressor cooling will not be required. Then as the building load increases and the economizer no longer can maintain setpoint, the Intellipak controller sends a signal to the TRV200 inverter to start the variable speed compressor (1A). The TRV200 inverter ramps the compressor up to 50Hz for 10 seconds to ensure compressor startup lubrication. Control is released back to the Intellipak controller and the compressor runs at minimum speed command (0 VDC from VSM board).

Until the building load exceeds the variable speed compressor capacity at minimum speed, the Intellipak compressor will cycle the variable speed compressor to meet setpoint (4 minute minimum on/off time). However, since variable speed unit minimum capacity is about 15%, this transition cycling will be less than a typical fixed speed compressor unit which may have 25% minimum capacity.

As the building load increases and eventually equals the variable speed compressor capacity at minimum speed, the compressor will run continuously and no longer cycle. Then as the building load increases, the Intellipak controller will increase compressor speed to meet the setpoint. When the variable speed compressor eventually reaches maximum speed and more capacity is required, a fixed speed compressor is started while the variable speed compressor speed is simultaneously ramped back down to minimum. Note that capacity overlap is provided between each stage of operation to provide continuous capacity modulation and minimize compressor cycling between stages.

Figure 12. eFlex variable speed compressor, IntelliPak controller sequences

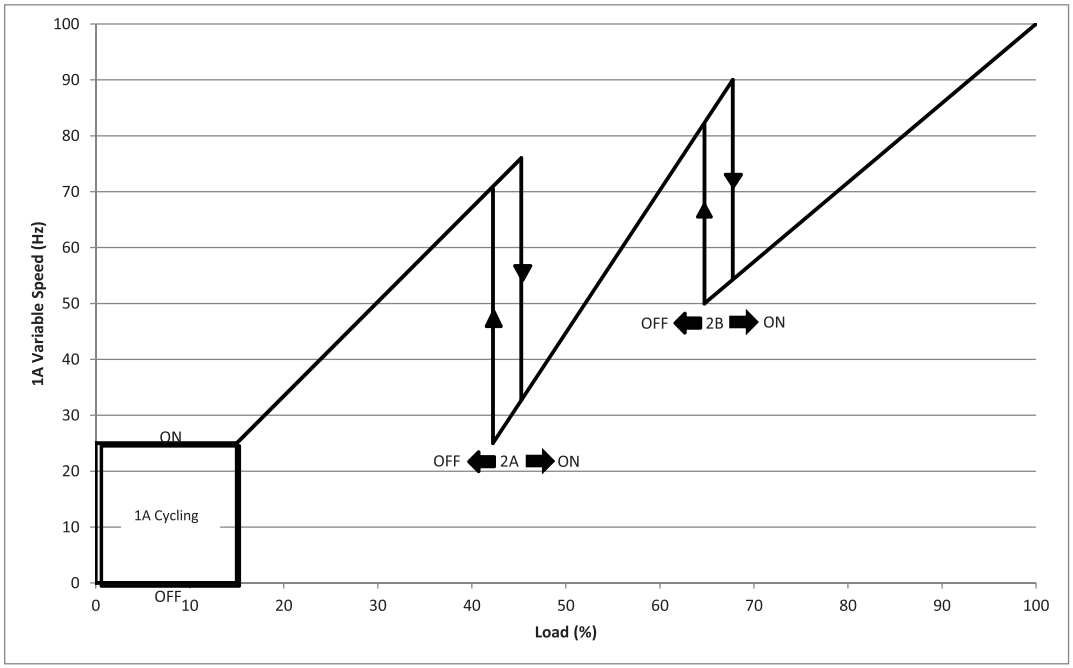

Fault Detection and Diagnostics

Fault Detection of the Outdoor Air Damper will be evaluated based on the commanded position of the damper compared to the feedback position of the damper. The damper is commanded to a position based on a 2-10 VDC signal. If the Damper position is outside of ±10% of the commanded position, a diagnostic is generated.

Unit Not Economizing when it should be:

The Unit is operating in Cooling Mode, Economizing is enabled and/or Mechanical Cooling is enabled. If the Commanded Economizer Position is greater than Current Economizer Feedback Position + 10% for 5 continuous minutes, Unit Not Economizing when it should be diagnostic is generated.

Unit Economizing when it should not be:

The unit is operating in Cooling Mode, Economizing is enabled and or Mechanical Cooling is enabled. If the commanded Economizer Position is less than the current Economizer Feedback Position - 10% for 5 continuous minutes, Unit Economizing When it should not be diagnostic is generated.

Outdoor Air Damper Not Modulating

The unit is operating in Ventilation Only Mode—not attempting to Economize and the Commanded Damper Position is greater than the Current Damper Feedback Position + 10% for 5 continuous minutes, Outdoor Air Damper Not Modulating diagnostic is generated.

Excessive Outdoor Air

The unit is operating in Ventilation Only Mode—not attempting to Economize and the Commanded Damper Position is less than the Current Damper Feedback Position - 10% for 5 continuous minutes. Excessive Outdoor Air diagnostic is generated.

To change the Economizer Control Function to dry bulb, go to the Configuration Menu on the human interface module and set Comparative Enthalpy to “Not Installed.” This allows the user to select dry bulb under the Economizer Control Function which is a Submenu of the Setup Menu. For additional instructions please see the Programming and Troubleshooting Guide.

Installation

Unit Inspection

As soon as the unit arrives at the job site, do the following:

[ ] Verify that the nameplate data matches the data on the sales order and bill of lading (including electrical data).

[ ] Verify that the power supply complies with the unit nameplate specifications.

[ ] Verify that the power supply complies with the electric heater specifications on the unit nameplate.

[ ] Visually inspect the exterior of the unit, including the roof, for signs of shipping damage.

[ ] Check for material shortages. Refer to the Component Layout and Ship with location illustration.

[ ] If the job site inspection of the unit reveals damage or material shortages, file a claim with the carrier immediately. Specify the type and extent of the damage on the "bill of lading" before signing.

[ ] Visually inspect the internal components for shipping damage as soon as possible after delivery and before it is stored. Do not walk on the sheet metal base pans.

⚠WARNING

No Step Surface!

FOR ACCESS TO COMPONENTS, THE BASE SHEET METAL SURFACE MUST BE REINFORCED. DDP SUPPLY FANS REQUIRE BRIDGING OVER THE DISCHARGE OPENING.

Bridging between the unit's main supports may consist of multiple 2 by 12 boards or sheet metal grating. Failure to comply could result in death or severe personal injury from falling.

[ ] If concealed damage is discovered, notify the carrier's terminal of damage immediately by phone and by mail. Concealed damage must be reported within 15 days.

Request an immediate joint inspection of the damage by the carrier and the consignee. Do not remove damaged material from the receiving location. Take photos of the damage, if possible. The owner must provide reasonable evidence that the damage did not occur after delivery.

Storage

Take precautions to prevent condensate from forming inside the unit's electrical compartments and motors if the unit:

- Is stored before it is installed.
- Is set on the roof curb, and temporary heat is provided in the building. Isolate all side panel service entrances and base pan openings (e.g., conduit holes, S/A and R/A openings, and flue openings) from the ambient air until the unit is ready for startup.

Note: Do not use the unit's heater for temporary heat without first completing the startup procedure detailed under "Starting the Unit."

Trane will not assume any responsibility for equipment damage resulting from condensate accumulation on the unit's electrical and/or mechanical components.

Unit Clearances

Figure 13, p. 29 illustrates the minimum operating and service clearances for either a single or multiple unit installation. These clearances are the minimum distances necessary to assure adequate serviceability, cataloged unit capacity, and peak operating efficiency.

Providing less than the recommended clearances may result in condenser coil starvation, "short-circuiting" of exhaust and economizer airflows, or recirculation of hot condenser air.

Table 5. Unit dimensions & weight information

Description	Reference
Air-Cooled Condenser	
Unit dimensions, 20–75 ton (SAHL)	Figure 14, p. 30, Table 6, p. 30 Figure 15, p. 31, Table 7, p. 31 Figure 16, p. 32, Table 8, p. 32
Unit dimensions, 90–130 ton	Figure 21, p. 37
Typical unit and operation weights	Table 16, p. 39
Center-of-gravity illustration and related dimensional data	Figure 22, p. 38, Table 15, p. 38
Evaporative Condenser	
Unit dimensions, 20–89 ton (SEH_, SFH_, SLH_, SSH_, and SXH_)	Figure 17, p. 33, Table 9, p. 33, Table 10, p. 33, Table 11, p. 34 Figure 18, p. 34, Table 12, p. 34 Figure 19, p. 35, Table 13, p. 35
Typical unit and operation weights[(a)], Air-Cooled Condenser	Table 16, p. 39
Typical unit and operation weights[(a)], Evaporative Condenser	Table 17, p. 40
Center-of-gravity illustration and related dimensional data	Figure 22, p. 38, Table 15, p. 38

(a) Weights shown represent approximate operating weights. Actual weights are stamped on the unit nameplate.

Figure 13. Minimum operation and service clearances for single and multiple unit installation

Single Unit Installation

Legend

A = Return Air Opening
B = Outside Air Intake
C = Supply Air Opening
D = Condenser Section
E = Optional 2'10-3/4" Exhaust/Return Access Door (180° swing)
F = Hinged 2'10-3/4" Filter Access Door (180° swing)
G = Hinged 2'10-3/4" optional Heater or Final Filter Access Door (180° swing)
H = Hinged 2'10-3/4" Supply Fan Access Door (180° swing) (90-130 ton)
J = Hinged 2'4-1/2" Control Panel Door (180° swing) (90-130 ton)
K = Hinged 2'10-3/4" VFD Access Door (180° swing)
L = Hinged 2'10-3/4" Evap Condenser Access Door (180° swing)
M = Hinged 2'8" Control Panel Door (180° swing) (20-36 ton)
Hinged 3'6" Control Panel Door (180° swing) (40-89 ton)

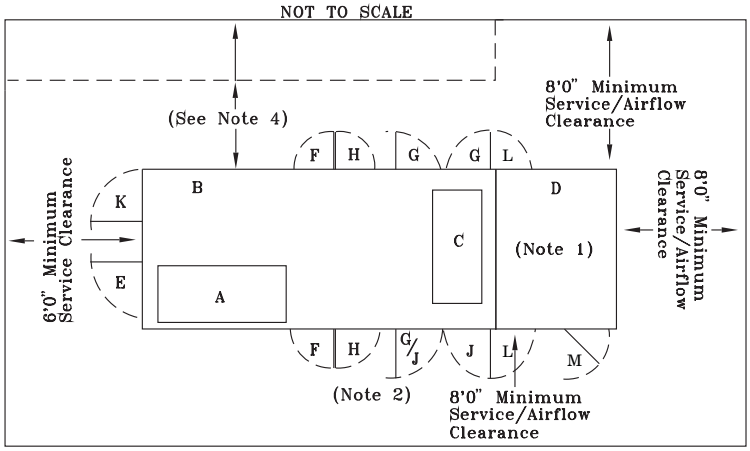

Multiple Unit Installation

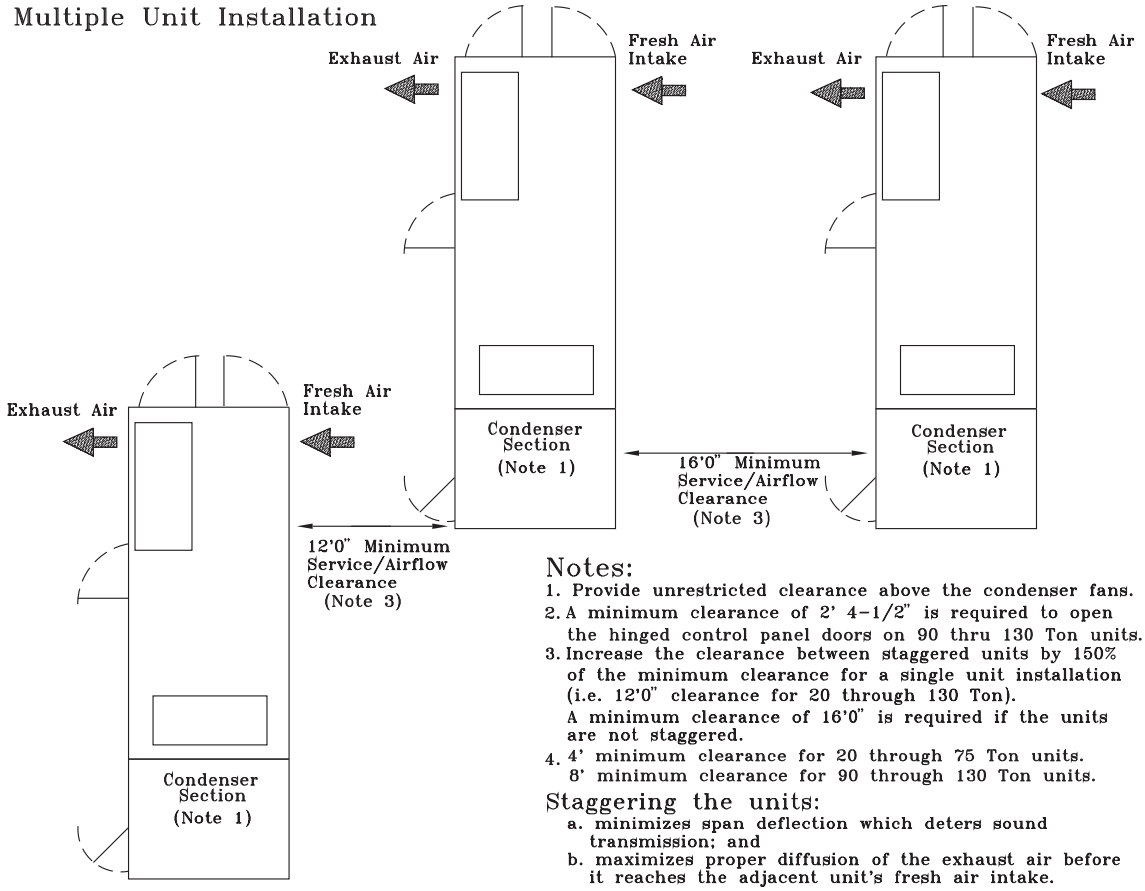

Notes:

1. Provide unrestricted clearance above the condenser fans.
2. A minimum clearance of 2' 4-1/2" is required to open the hinged control panel doors on 90 thru 130 Ton units.
3. Increase the clearance between staggered units by 150% of the minimum clearance for a single unit installation (i.e. 12'0" clearance for 20 through 130 Ton).
   A minimum clearance of 16'0" is required if the units are not staggered.
4. 4' minimum clearance for 20 through 75 Ton units.
   8' minimum clearance for 90 through 130 Ton units.

Staggering the units:

a. minimizes span deflection which deters sound transmission; and
b. maximizes proper diffusion of the exhaust air before it reaches the adjacent unit's fresh air intake.

Figure 14. Unit dimensions, SAHL cooling-only units (20 to 75), use Table 6.

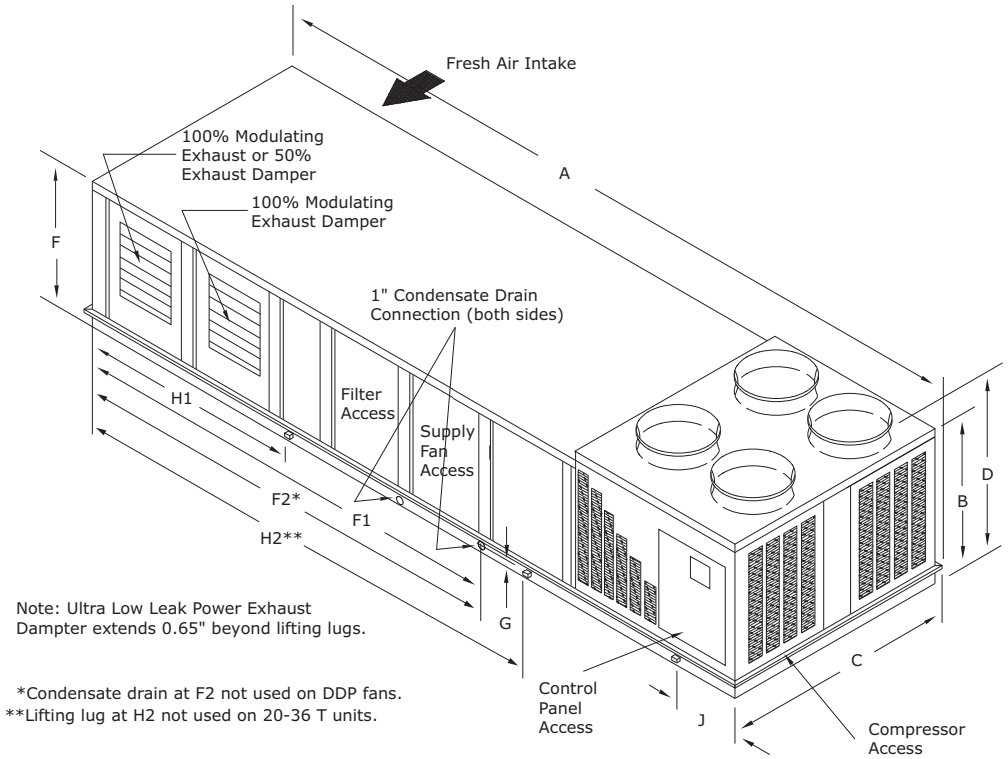

Table 6. Unit dimensions, SAHL cooling-only units (20 to 75)

Unit Size	Unit Dimensions for SAHL										
	A	B	C	D	E	F1	F2	G	H1	H2	J
20, 25	21'–9 3/4"	6'–9"	7'–6 1/2"	7'–3 1/4"	3'–9 5/16"	10'–7"	12'–6"	1"	7'	N/A	1'–3 1/2"
30	21'–9 3/4"	6'–9"	7'–6 1/2"	7'–3 1/4"	4'–9 5/16"	10'–7"	12'–6"	1"	7'	N/A	1'–3 1/2"
40	29'–8"	6'–9"	7'–6 1/2"	7'–3 1/4"	5'–9 5/16"	12'–1 1/4"	15'–4 5/16"	1"	8'	16'–2 5/16"	2'–5"
50, 55	29'–8"	6'–9"	7'–6 1/2"	7'–3 1/4"	6'–9 5/16"	12'–1 1/4"	15'–4 5/16"	1"	8'	16'–2 5/16"	2'–5"
60	29'–8"	6'–9"	9'–8"	7'–3 1/4"	5'–9 5/16"	12'–1 1/4"	15'–4 5/16"	1"	8'	16'–2 5/16"	2'–5"
70, 75	29'–8"	6'–9"	9'–8"	7'–3 1/4"	5'–9 5/16"	12'–1 1/4"	15'–4 5/16"	1"	8'	16'–2 5/16"	2'–5"

Figure 15. Unit base dimensions, SAHL cooling-only units (20 to 75), use Table 7.

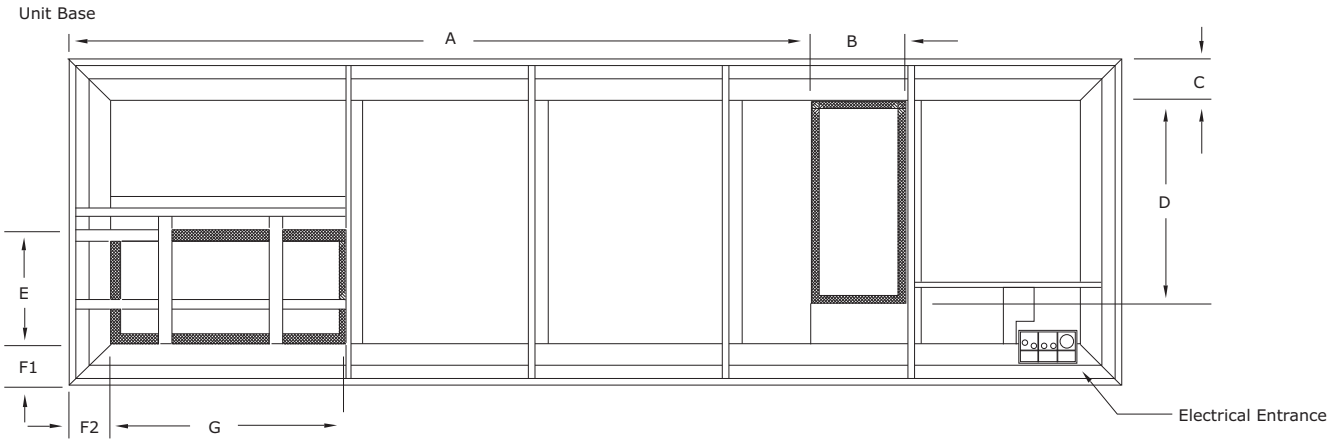

Table 7. Unit base dimensions, SAHL cooling-only units (20 to 75)

Unit Size (Tons)	Unit Base Dimensions for SAHL											
					E		F1		F2		G	
					Fan Type							
	A	B	C	D	Exhaust	Return	Exhaust	Return	Exhaust	Return	Exhaust	Return
20–30	14'–30 1/4"	2'–32 1/2"	11 3/4"	5'–7"	3'–4 3/8"	2'–9 15/16"	5 13/16"	8 1/4"	5 13/16"	28 5/8"	6'–6 15/16"	3'
40–50	16'–31 13/16"	2'–5"	11 3/4"	5'–7"	3'–4 3/8"	3'–1 1/2"	5 13/16"	8 1/4"	5 13/16"	32 15/16"	7'–8 3/16"	3'–4"
60	16'–31 13/16"	2'–5"	1'–4 9/16"	6'–10 7/8"	4'–5 3/8"	4'–2 1/2"	5 13/16"	8 1/4"	5 13/16"	26 7/16"	7'–8 3/16"	4'–5"
70–75	16'–31 13/16"	2'-5"	1'–4 9/16"	6'–10 7/8"	4'–5 3/8"	4'–2 1/2"	5 13/16"	8 1/4"	5 13/16"	26 7/16"	7'–8 3/16"	4'–5"

Figure 16. Electrical entrance dimensions, SAHL cooling-only units (20 to 75), use Table 8.

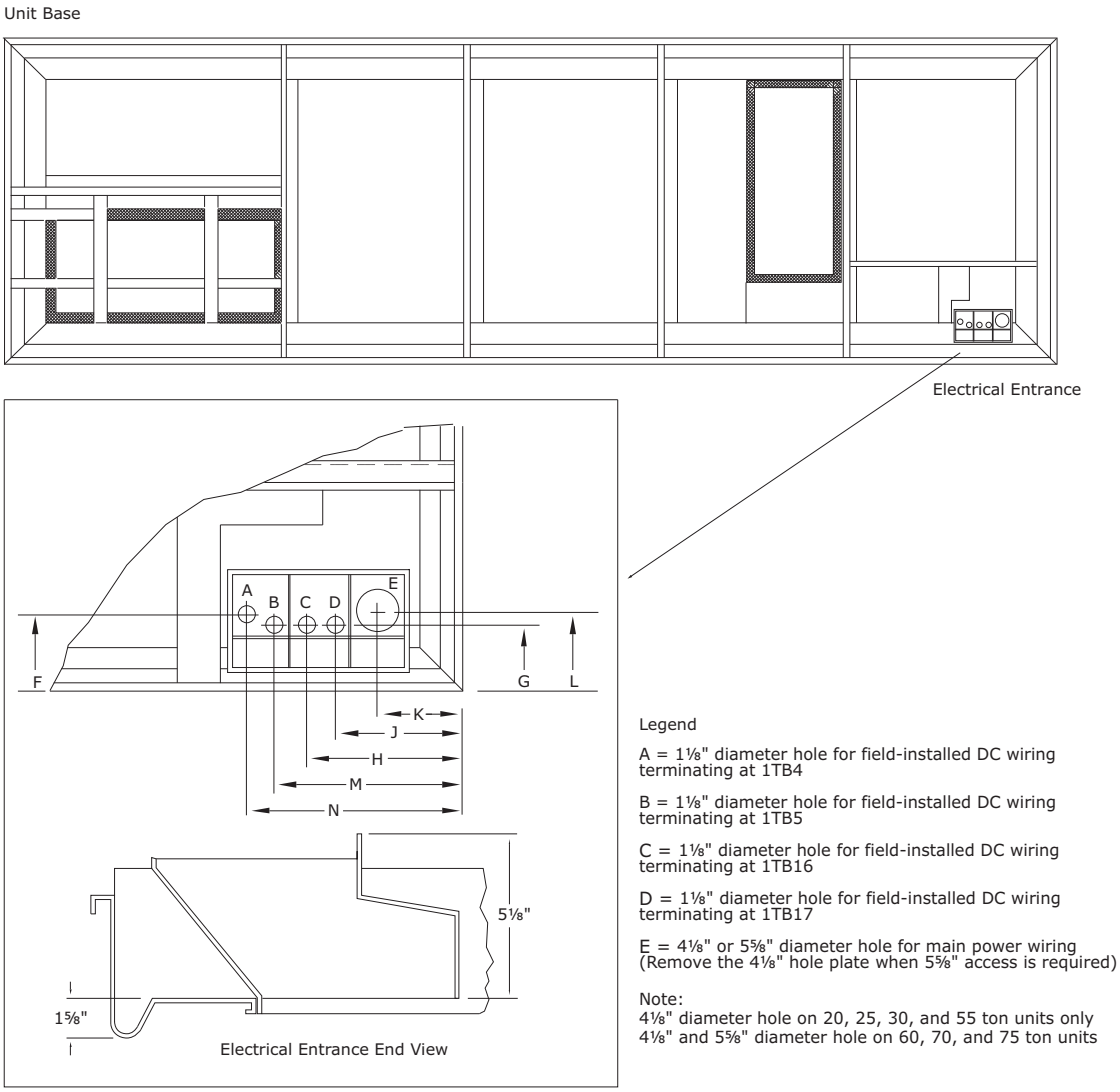

Legend

A = 1⅛" diameter hole for field-installed DC wiring terminating at 1TB4

B = 1⅛" diameter hole for field-installed DC wiring terminating at 1TB5

C = 1⅛" diameter hole for field-installed DC wiring terminating at 1TB16

D = 1⅛" diameter hole for field-installed DC wiring terminating at 1TB17

E = 4⅛" or 5⅝" diameter hole for main power wiring (Remove the 4⅛" hole plate when 5⅝" access is required)

Note:
4⅛" diameter hole on 20, 25, 30, and 55 ton units only
4⅛" and 5⅝" diameter hole on 60, 70, and 75 ton units

Table 8. Electrical entrance dimensions, SAHL cooling-only units (20 to 75)

Unit Size	Electrical Entrance Dimensions							
	F	G	H	J	K	L	M	N
20, 25, 30 ton	8 7/32"	6 31/32"	15 21/32"	13 21/32"	9 17/32"	8 1/2"	18 1/16"	19 9/16"
40 to 75 ton	8 7/8"	7 7/8"	17 7/8"	15 7/8"	9 29/32"	10 3/16"	20 13/32"	22 5/32"

Figure 17. Unit dimensions, SEHL, SFHL, SLHL, SSHL, SXHL units (20 to 89 ton), use Table 9 and Table 10. Use Table 11 for CPVC furnace drain dimensions.

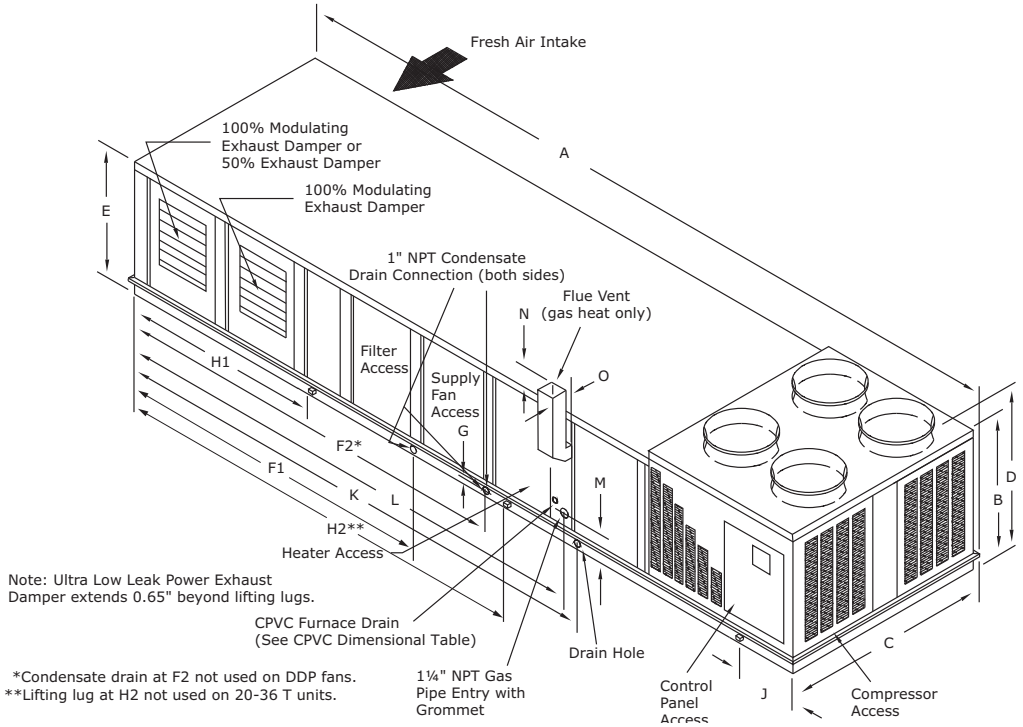

Table 9. Unit dimensions, SEHL, SFHL, SLHL, SSHL, SXHL units (20 to 89 ton)—air cooled

Unit Size	Air-Cooled Unit Dimensions															
	A	B	C	D	E	F1	F2	G	H1	H2	J	K	L	M	N	O
20, 25	24'–1 3/8"	6'–9"	7'–6 1/2"	7'–3 1/4"	3'–9 5/16"	10'–7"	13'–3"	1"	7'	N/A	1'–3 1/2"	16'–7"	16'–6"	8 1/8"	6 1/4"	9"
30	24'–1 3/8"	6'–9"	7'–6 1/2"	7'–3 1/4"	4'–9 5/16"	10'–7"	13'–3"	1"	7'	N/A	1'–3 1/2"	16'–7"	16'–6"	8 1/8"	6 1/4"	9"
40	32'–10 1/2"	6'–9"	7'–6 1/2"	7'–3 1/4"	5'–9 5/16"	12'–1 1/8"	15'–4 5/16"	1"	8'	16'–2 5/16"	2'–5"	19'–7"	See Note	8 1/8"	6 1/4"	9"
50, 55	32'–10 1/2"	6'–9"	7'–6 1/2"	7'–3 1/4"	6'–9 5/16"	12'–1 1/8"	15'–4 5/16"	1"	8'	16'–2 5/16"	2'–5"	19'–7"	See Note	8 1/8"	6 1/4"	9"
60	32'–10 1/2"	6'–9"	9'–8"	7'–3 1/4"	5'–9 5/16"	12'–1 1/8"	15'–4 5/16"	1"	8'	16'–2 5/16"	2'–5"	19'–7"	See Note	8 1/8"	6 1/4"	9"
70, 75	32'–10 1/2"	6'–9"	9'–8"	7'–3 1/4"	5'–9 5/16"	12'–1 1/8"	15'–4 5/16"	1"	8'	16'–2 5/16"	2'–5"	19'–7"	See Note	8 1/8"	6 1/4"	9"

Table 10. Unit dimensions, SEHL, SFHL, SLHL, SSHL, SXHL units (20 to 89 ton)—evaporative condensing

Unit Size	Evaporative Condensing Unit Dimensions															
	A	B	C	D	E	F1	F2	G	H	H2	J	K	L	M	N	O
24, 29	26'–5 1/2"	6'–9"	7'–6 1/2"	8'–4 3/4"	3'–9 5/16"	10'–7"	13'–3"	1"	7'	N/A	1'–3 1/2"	16'–7"	16'–6"	8 1/8"	6 1/4"	9"
36	26'–5 1/2"	6'–9"	7'–6 1/2"	8'–4 3/4"	4'–9 5/16"	10'–7"	13'–3"	1"	7'	N/A	1'–3 1/2"	16'–7"	16'–6"	8 1/8"	6 1/4"	9"
48	32'–10 1/2"	6'–9"	7'–6 1/2"	8'–4 3/4"	5'–9 5/16"	12'–1 1/8"	15'–4 5/16"	1"	8'	16'–2 5/16"	2'–5"	19'–7"	See Note	8 1/8"	6 1/4"	9"
59	32'–10 1/2"	6'–9"	7'–6 1/2"	8'–4 3/4"	6'–9 5/16"	12'–1 1/8"	15'–4 5/16"	1"	8'	16'–2 5/16"	2'–5"	19'–7"	See Note	8 1/8"	6 1/4"	9"
73	32'–10 1/2"	6'–9"	9'–8"	8'–4 3/4"	5'–9 5/16"	12'–1 1/8"	15'–4 5/16"	1"	8'	16'–2 5/16"	2'–5"	19'–7"	See Note	8 1/8"	6 1/4"	9"
80, 89	32'–10 1/2"	6'–9"	9'–8"	8'–4 3/4"	5'–9 5/16"	12'–1 1/8"	15'–4 5/16"	1"	8'	16'–2 5/16"	2'–5"	19'–7"	See Note	8 1/8"	6 1/4"	9"

Note: 19'–6" for SFHL "High Heat" units or 20'–3" for SFHL "Low Heat" units.

Table 11. CVPC furnace drain dimensions

Unit Size (AC/EC)	Furnace Size/MBH	Dimensions (Note)	
		Length	Height
20 & 25, 24 & 29 ton	Low = 235	195-5/32"	9-5/32"
	High = 500	195-5/32"	9-5/32"
30, 36 ton	Low = 350	195-5/32"	9-5/32"
	High = 500	195-5/32"	9-5/32"
40, 48 ton	Low = 350	240-1/8"	9-5/32"
	High = 850	231-1/8"	9-5/32"
50-75, 59-89 ton	Low = 500	240-1/8"	9-5/32"
	High = 850	231-1/8"	9-5/32"

Note: The length dimension is from the exhaust end of the unit. The height dimension is from the bottom of the unit base rail.

Figure 18. Unit base dimensions, SEHL, SFHL, SLHL, SSHL, SXHL units (20 to 89 ton), use Table 12.

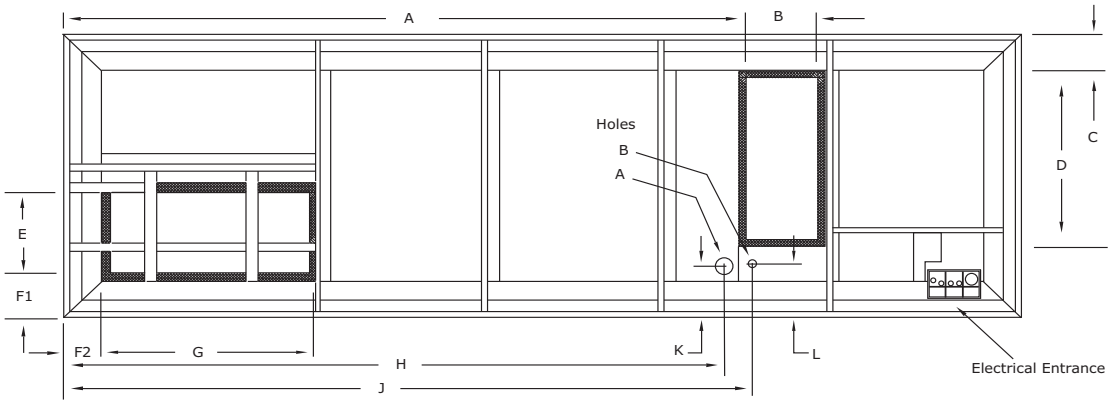

Unit Base Notes:
1. SEHL — For 208/230 volt electric heat units, use hole "A" (3⅝" diameter).
2. SFHL — For gas heat units, use hole "B" (1¼" diameter).
3. SLHL and SSHL — For steam or hot water heat units, use holes "A" (3⅝" steam or hot water supply) and "B" (3" steam or hot water return).
4. SXHL — In extended cabinet cooling only units, the holes are omitted

Table 12. Unit base dimensions, SEHL, SFHL, SLHL, SSHL, SXHL units (20 to 89 ton)—air cooled and evaporative condensing

Unit Size (AC/EC)	Unit Base Dimensions											
					E		F1		G		F2	
					Fan Type							
	A	B	C	D	Exhaust	Return	Exhaust	Return	Exhaust	Return	Exhaust	Return
20–30/ 24–36 ton	16'–3 3/16"	2'–2 1/2"	5 13/16"	5'–7"	3'–4 3/8"	2'–9 15/16"	5 13/16"	8 1/4"	6'–6 15/16"	3'	5 13/16"	28 5/8"
40 & 50/ 48 & 59 ton	19'–10 5/16"	2'–5"	7 1/16"	5'–7"	3'–4 3/8"	3'–1 1/2"	5 13/16"	8 1/4"	7'–8 3/16"	3'–4"	5 13/16"	32 15/16"
60/73 ton	19'–10 5/16"	2'–5"	6 1/16"	Note 1	4'–5 3/8"	4'–2 1/2"	5 13/16"	8 1/4"	7'–8 3/16"	4'–5"	5 13/16"	26 7/16"
70–75/ 80–89 ton	19'–10 5/16"	2'–5"	6 1/16"	Note 1	4'–5 3/8"	4'–2 1/2"	5 13/16"	8 1/4"	7'–8 3/16"	4'–5"	5 13/16"	26 7/16"

	H	J	K	L
20–30/ 24–36 ton	15'–5 5/16"	16'–9 3/4"	8 13/16"	9 1/16"
40 & 50/ 48 & 59 ton	18'–11 11/ 16"	Note 2	8 3/16"	9 1/16"
60/73 ton	18'–11 11/ 16"	Note 2	8 3/16"	9 1/16"
70–75/ 80–89 ton	18'–11 11/ 16"	Note 2	8 3/16"	9 1/16"

Notes:
1. 5'–5 15/16" for SEHL units or 7'–8 1/2" for SFHL, SLHL, SSHL, SXHL units.
2. 20'–1 3/4" for SFHL "High Heat" units or 20'–6 3/4" for SFHL "Low Heat" units. Either is selectable in field for SL and SS Return.

Figure 19. Electrical entrance dimensions, SEHL, SFHL, SLHL, SSHL, SXHL units (20 to 89 tons), use Table 13

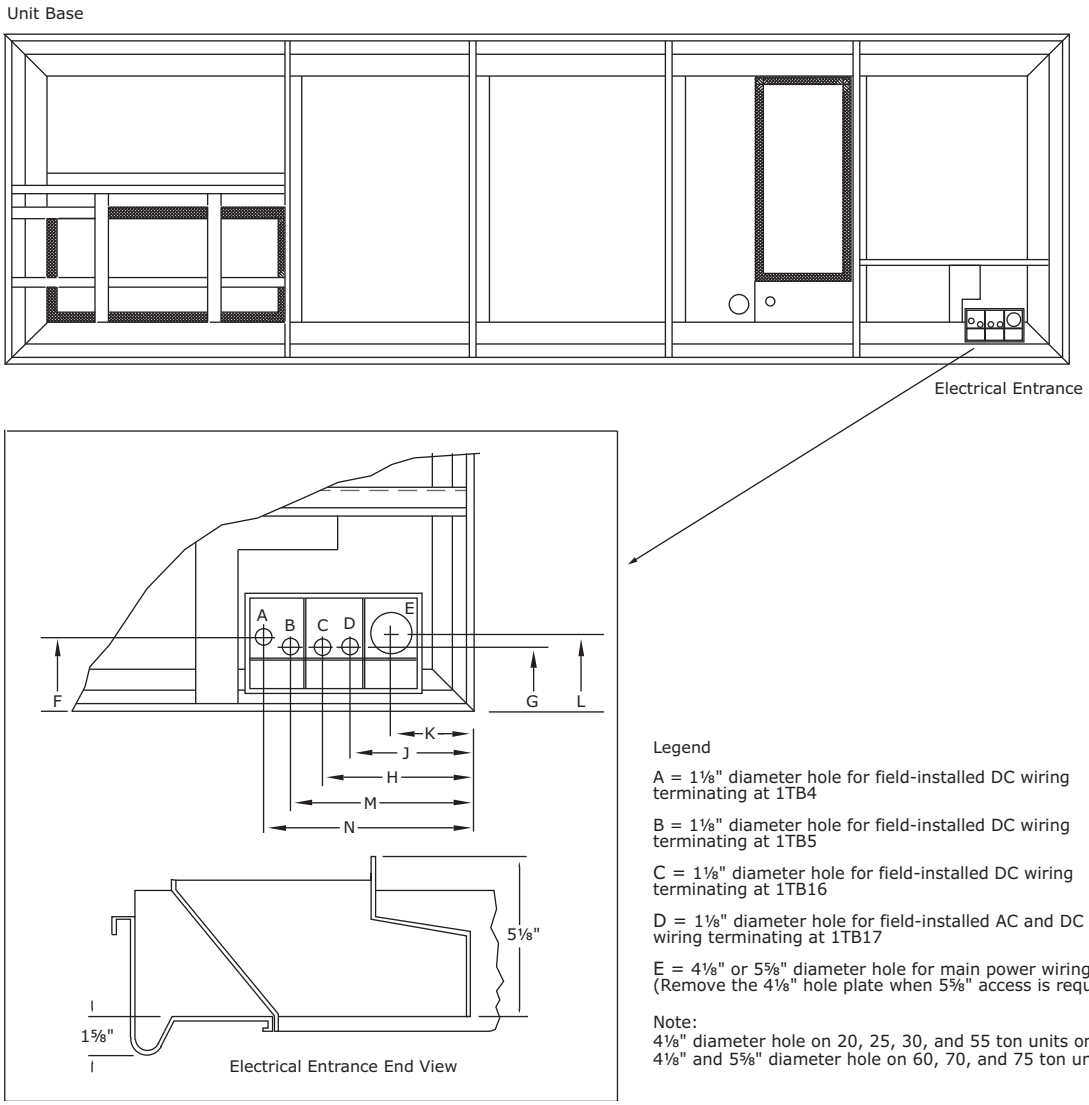

Legend

A = 1⅛" diameter hole for field-installed DC wiring terminating at 1TB4

B = 1⅛" diameter hole for field-installed DC wiring terminating at 1TB5

C = 1⅛" diameter hole for field-installed DC wiring terminating at 1TB16

D = 1⅛" diameter hole for field-installed AC and DC wiring terminating at 1TB17

E = 4⅛" or 5⅝" diameter hole for main power wiring (Remove the 4⅛" hole plate when 5⅝" access is required)

Note:
4⅛" diameter hole on 20, 25, 30, and 55 ton units only
4⅛" and 5⅝" diameter hole on 60, 70, and 75 ton units

Table 13. Electrical entrance dimensions, SEHL, SFHL, SLHL, SSHL, SXHL units (20 to 89 ton)

Unit Size (AC/EC)	Dimensions							
	F	G	H	J	K	L	M	N
20, 25, 30 ton	8 7/32"	6 31/32"	15 21/32"	13 21/32"	9 17/32"	8 1/2"	18 1/16"	19 9/16"
40–75 / 24–89 ton	8 7/8"	7 7/8"	17 7/8"	15 7/8"	9 29/32"	10 3/16"	20 13/32"	22 5/32"

Figure 20. Evaporative condenser water connection locations

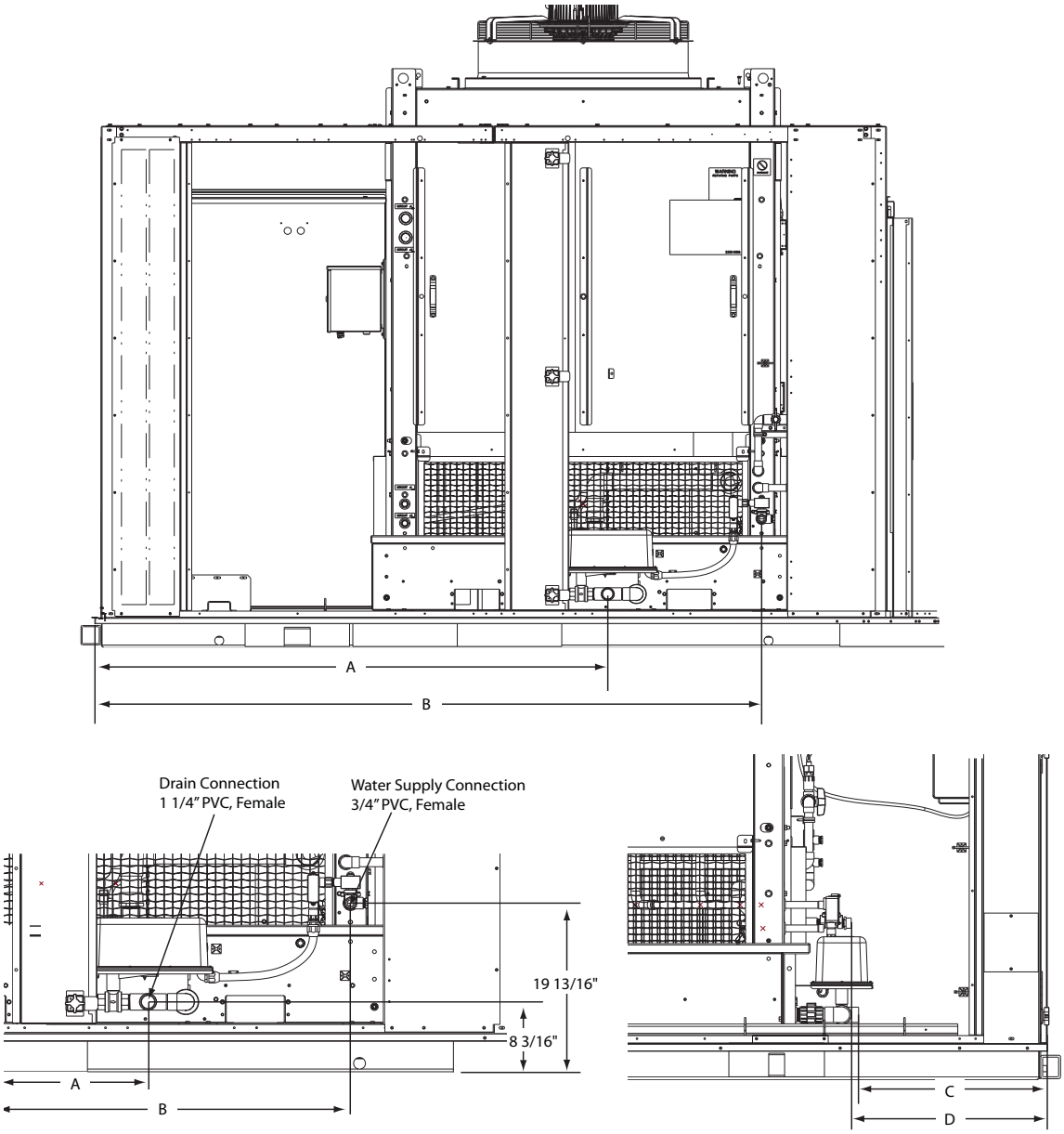

Table 14. Evaporative condenser drain and inlet water connection dimensions

Tons (EC)	Drain Connection		Inlet Water Connection	
	A	B	C	D
24, 29 & 36 ton	5'	6'–7 5/16"	12"	12 15/16"
48 & 59 ton	6'–10 7/8"	8'–6 1/8"	12"	12 15/16"
73, 80 & 89 ton	6'–6 9/16"	8'–6 1/8"	23 11/16"	24 5/8"

Figure 21. S_HK cooling and heating units (90-130 ton)

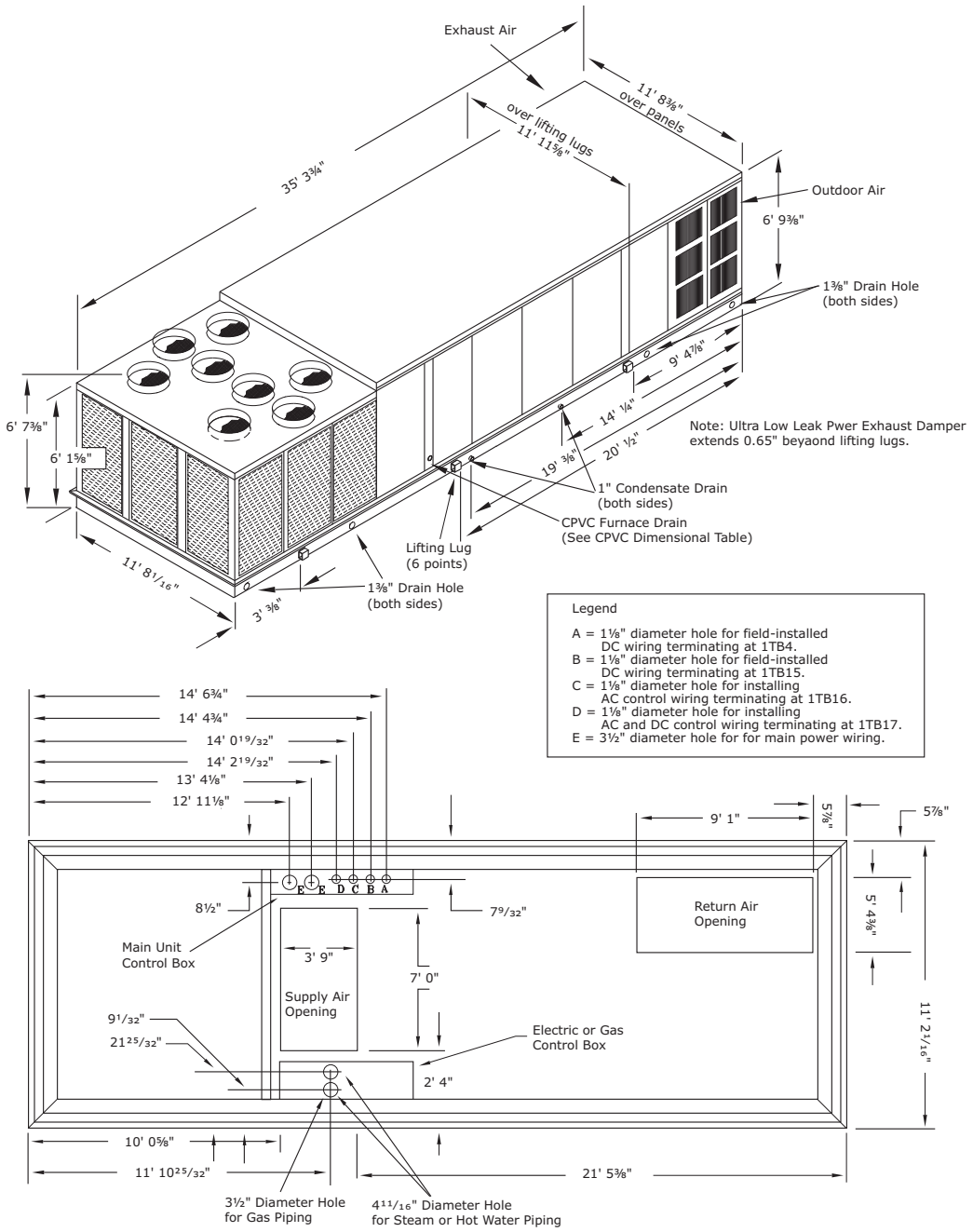

Figure 22. Center of gravity data

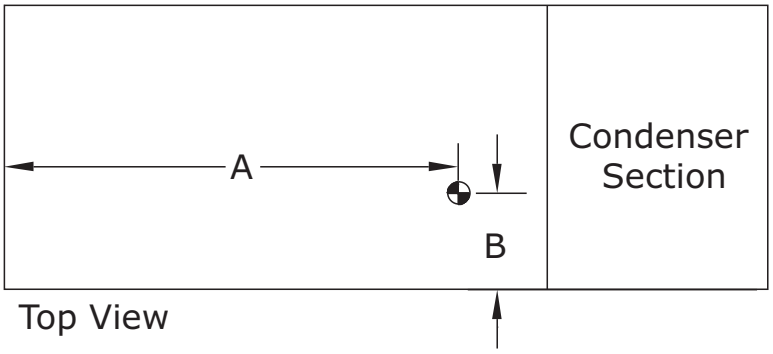

Table 15. Center of gravity data

Unit Model	Unit Size	Units without 100% Exhaust/Return Fan		Units with Exhaust/Return Fan		Units with Supply & Exhaust/Return VFD	
		Dim. A	Dim. B	Dim. A	Dim. B	Dim. A	Dim. B
SAHL	20	13' 5''	3' 10''	12' 9''	3' 9''	12' 3''	3' 10''
	25	13' 6''	3' 10''	12' 10''	3' 9''	12' 3''	3' 10''
	30	12' 10''	3' 10''	12' 0''	3' 9''	11' 6''	3' 10''
	40	17' 4''	4' 0''	16' 2''	3' 11''	15' 6''	3' 11''
	50	17' 6''	4' 0''	16' 4''	3' 11''	15' 8''	3' 11''
	55	17' 6''	4' 0''	16' 4''	3' 11''	15' 9''	3' 11''
	60	16' 11''	4' 10''	15' 9''	4' 8''	15' 2''	4' 9''
	70	16' 12''	4' 10''	15' 9''	4' 8''	15' 3''	4' 9''
	75	17' 6''	4' 10''	16' 3''	4' 8''	15' 8''	4' 9''
SEHL, SLHL, SSHL, SXHL	20	14' 7''	3' 9''	13' 11''	3' 8''	13' 4''	3' 9''
	25	14' 7''	3' 9''	13' 11''	3' 8''	13' 5''	3' 9''
	30	13' 12''	3' 9''	13' 1''	3' 8''	12' 7''	3' 9''
	40	18' 9''	3' 11''	17' 7''	3' 10''	16' 11''	3' 10''
	50	19' 1''	4' 0''	17' 10''	3' 11''	17' 2''	3' 11''
	55	19' 1''	4' 0''	17' 11''	3' 11''	17' 3''	3' 12''
	60	18' 5''	4' 9''	17' 1''	4' 7''	16' 5''	4' 8''
	70	18' 7''	4' 10''	17' 3''	4' 8''	16' 8''	4' 9''
	75	19' 1''	4' 10''	17' 9''	4' 8''	17' 2''	4' 9''
SFHL	20	14' 8''	3' 10''	14' 0''	3' 9''	13' 6''	3' 10''
	25	14' 9''	3' 9''	14' 1''	3' 8''	13' 6''	3' 9''
	30	14' 1''	3' 9''	13' 3''	3' 8''	12' 9''	3' 9''
	40	18' 11''	3' 11''	17' 9''	3' 10''	17' 2''	3' 10''
	50	19' 1''	3' 11''	17' 11''	3' 10''	17' 3''	3' 11''
	55	19' 1''	3' 11''	18' 0''	3' 10''	17' 4''	3' 11''
	60	18' 6''	4' 9''	17' 3''	4' 7''	16' 8''	4' 9''
	70	18' 7''	4' 9''	17' 4''	4' 7''	16' 9''	4' 8''
	75	19' 1''	4' 9''	17' 10''	4' 7''	17' 3''	4' 9''
SEHK, SLHK, SSHK, SXHK	90	19' 11"	6' 3"	18' 5"	5' 10"	17' 5"	5' 10"
	105	20' 4"	6' 3"	18' 10"	5' 11"	17' 10"	6' 0"
	115	20' 0"	6' 3"	18' 6"	5' 11"	17' 7"	6' 0"
	130	19' 11"	6' 3"	18' 6"	5' 11"	17' 7"	6' 0"
SFHK	90	19' 11"	6' 4"	18' 6"	6' 0"	17' 6"	5' 11"
	105	20' 4"	6' 4"	18' 11"	6' 0"	18' 0"	6' 1"
	115	20' 0"	6' 4"	18' 7"	6' 0"	17' 8"	6' 1"
	130	20' 0"	6' 4"	18' 7"	6' 0"	17' 8"	6' 0"

Note: **Note:** Dimensions shown for the center-of-gravity are approximate and are based on a unit equipped with: Standard coils, FC Fans, 100% economizer, throwaway filters, 460 volt XL start, high capacity heat (as applicable).

Table 16. Air-cooled condenser—approximate operating weights (lb/kg)

Unit		Without Exhaust Fan					With Exhaust Fan				
		SA	SX	SE	SF	SL/SS	SA	SX	SE	SF	SL/SS
20	lb	4116	4336	4446	4736	4446	4414	4634	4744	5034	4744
	kg	1867	1967	2017	2148	2017	2002	2102	2152	2283	2152
25	lb	4209	4419	4549	4819	4549	4513	4723	4853	5123	4853
	kg	1909	2004	2063	2186	2063	2047	2142	2201	2324	2201
30	lb	4598	4838	4958	5228	4958	5055	5295	5415	5685	5415
	kg	2086	2194	2249	2371	2249	2293	2402	2456	2579	2456
40	lb	6511	6891	7051	7531	7051	7181	7561	7721	8201	7721
	kg	2953	3126	3198	3416	3198	3257	3430	3502	3720	3502
50	lb	7236	7616	7786	8246	7786	7955	8335	8505	8965	8505
	kg	3282	3455	3532	3740	3532	3608	3781	3858	4066	3858
55	lb	7484	7874	8034	8514	8034	8203	8593	8753	9233	8753
	kg	3395	3572	3644	3862	3644	3721	3898	3970	4188	3970
60	lb	8396	8612	8772	9232	8772	9339	9555	9715	10175	9715
	kg	3808	3906	3979	4188	3979	4236	4334	4407	4615	4407
70	lb	8659	8839	8989	9469	8989	9602	9782	9932	10412	9932
	kg	3928	4009	4077	4295	4077	4355	4437	4505	4723	4505
75	lb	8912	9092	9242	9722	9242	9855	10035	10185	10665	10185
	kg	4042	4124	4192	4410	4192	4470	4552	4620	4838	4620
90	lb	x	12493	12648	13293	13343	x	13831	13986	14631	14681
	kg	x	5667	5737	6030	6052	x	6273	6344	6637	6659
105	lb	x	13126	13281	13926	13976	x	14464	14619	15264	15314
	kg	x	5954	6024	6317	6339	x	6561	6631	6924	6946
115	lb	x	13330	13485	14130	14180	x	14668	14823	15468	15518
	kg	x	6046	6117	6409	6432	x	6653	6724	7016	7039
130	lb	x	13616	13771	14416	14466	x	14954	15109	15754	15829
	kg	x	6176	6246	6539	6562	x	6783	6853	7146	7180

Notes:

1. Weights shown are for air-cooled units with standard capacity, standard efficiency and include the following features: FC fans, standard scroll compressors, 100% economizer, throwaway filters, maximum motor sizes, 460V XL start, high capacity heat.
2. Weights shown represent approximate operating weights and have a ±5% accuracy. To calculate weight for a specific unit configuration, utilize TOPSS™ or contact the local Trane sales representative. ACTUAL WEIGHTS ARE STAMPED ON THE UNIT NAMEPLATE.

Table 17. Evaporative condenser—approximate operating weights (lb/kg)

Unit		Without Exhaust Fan				With Exhaust Fan			
		SX	SE	SF	SL/SS	SX	SE	SF	SL/SS
24	lb	6549	6679	6944	6763	6907	7037	7302	7121
	kg	2971	3030	3150	3068	3133	3192	3312	3230
29	lb	6599	6729	6994	6813	6963	7093	7358	7177
	kg	2993	3052	3172	3090	3158	3217	3338	3255
36	lb	7121	7251	7513	7335	7538	7668	7933	7752
	kg	3230	3289	3409	3327	3419	3478	3598	3516
48	lb	9001	9156	9631	9359	9585	9740	10215	9943
	kg	4083	4153	4369	4245	4348	4418	4633	4510
59	lb	9213	9368	9843	9571	9856	10011	10486	10214
	kg	4179	4249	4465	4341	4471	4541	4756	4633
73	lb	11303	11458	11933	11691	12128	12283	12758	12516
	kg	5127	5197	5413	5303	5501	5571	5787	5677
80	lb	11430	11585	12060	11818	12255	12410	12885	12643
	kg	5185	5255	5470	5361	5559	5629	5845	5735
89	lb	11820	11975	12450	12208	12645	12800	13275	13033
	kg	5361	5432	5647	5537	5736	5806	6021	5912

Notes:
1. Weights shown for evaporative condensing units include the following features: FC fans, high capacity evaporative coil. Add 520 lbs for 24, 29, 36, 48 and 59 units and 680 lbs for 73, 80 and 89 units for installed sump base water weight for evaporative condenser total operating weight.
2. Weights shown represent approximate operating weights and have a ±5% accuracy. To calculate weight for a specific unit configuration, utilize TOPSS or contact the local Trane sales representative. ACTUAL WEIGHTS ARE STAMPED ON THE UNIT NAMEPLATE.

Table 18. Roof curb max weight[(a)]—air cooled and evaporative condenser

Unit	Roof Curb Maximum Weight	
	SAHL	S*HL
20-36	490	510
	222	231
40-59	515	550
	234	249
60-89	610	640
	277	290
90-130	N/A	770
	N/A	349

(a) Roof curb weights include the curb and pedestal.

Trane Roof Curb and Ductwork

The roof curbs for 20-130 ton units consists of two main components: a pedestal to support the unit's condenser section and a "full perimeter" enclosure to support the unit's air handler section.

Before installing any roof curb, verify the following:

- It is the correct curb for the unit
- It includes the necessary gaskets and hardware
- The purposed installation location provides the required clearance for proper operation
- Ensure that the curb is level and square; top surface of curb must be true to assure adequate curb-to-unit seal

Step-by-step curb assembly and installation instructions ship with each Trane accessory roof curb kit. Follow the instructions carefully to assure proper fit-up when the unit is set into place.

Note: To assure proper condensate flow during operation, the unit (and curb) must be as level as possible. The maximum slope allowable for rooftop unit applications, excluding SSH_s, is 4" end-to-end and 2" side-to-side. Units with steam coils (SSH_s) must be set level!

If the unit is elevated, a field constructed catwalk around the unit is strongly recommended to provide easy access for unit maintenance and service.

Recommendations for installing the Supply Air and Return Air ductwork joining the roof curb are included in the curb instruction booklet. Curb ductwork must be fabricated and installed by the installing contractor before the unit is set into place.

Note: For sound consideration, cut only the holes in the roof deck for the ductwork penetrations. Do not cut out the entire roof deck within the curb perimeter.

Pitch Pocket Location

The location of the main supply power entry for S_HL 20-89 ton rooftop units is located at the bottom right-hand corner of the control panel.

Figure 14 and Figure 17 illustrate the location for the electrical entrance through the base in order to enter the control panel. If the power supply conduit penetrates the building's roof beneath this opening, it is recommended that a pitch pocket be installed before the unit is placed onto the roof curb.

The center line dimensions shown in the illustration below indicates the center line of the electrical access hole in the unit base when it is positioned on the curb, ±3/8 inch. The actual diameter of the hole in the roof should be at least 1/2 inch larger than the diameter of the conduit penetrating the roof. This will allow for the clearance variable between the roof curb rail and the unit base rail illustrated in Figure 23.

The pitch pocket dimensions listed are recommended to enhance the application of roofing pitch after the unit is set into place. The pitch pocket may need to be shifted as illustrated to prevent interference with the curb pedestal.

Table 19. Pitch pocket dimensions

Unit	Tonnage	"A" Dimension	"B" Dimension
S*HL	20, 25 & 30	4' 5–9/16"	5–9/16"
S*HL	24, 29, & 36	6' 9–11/16"	5–1/2"
S*HL	40–89	9' 5–11/16"	5–1/2"

* = All unit functions (SAHL, SEHL, SFHL, SSHL, SLHL and SXHL)
Notes: For design special evaporative-cooled condensing units, please see the curb installers guide for proper pitch pocket locations.

Figure 23. Pitch pocket location

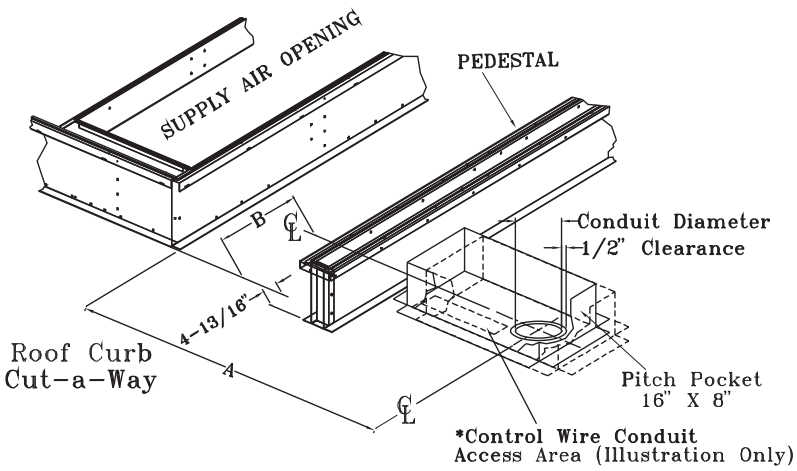

If Trane Curb Accessory Kit Not Used

- The ductwork can be attached directly to the factory-provided flanges around the unit's supply and return air openings. Be sure to use flexible duct connections at the unit.
- For "built-up" curbs supplied by others, gaskets must be installed around the curb perimeter flange and the supply and return air opening flanges.

Notes:

- *If a "built-up" curb is provided by others, keep in mind that these commercial rooftop units do not have base pans in the condenser section.*
- *If this is a REPLACEMENT UNIT keep in mind that the CURRENT DESIGN commercial rooftop units do not have base pans in the condenser section.*
- *Trane roof curbs are recommended. If using a non-Trane roof curb with right-angle return airflow approaches to a return fan inlet, a rigid, solid flow baffle wall should be installed across the full width of the roof curb return airflow path in the position shown in Figure 24, p. 41 to reduce potential airflow disturbances at the return fan inlet that could contribute to unusual return fan noise.*
- *If a full perimeter curb is used, make sure the IRU option was added to the unit to ensure stability in the condenser section*

Figure 24. Solid flow baffle wall installation for non-Trane roof curbs

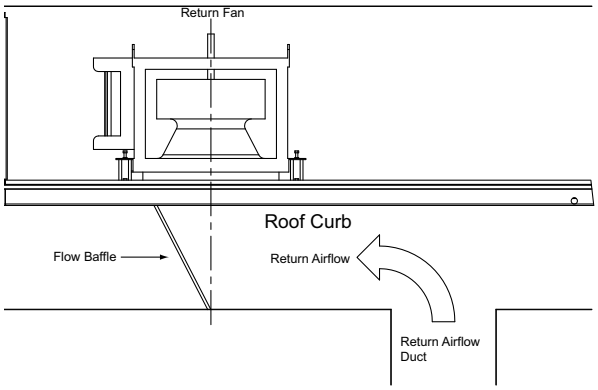

Unit Rigging & Placement

⚠WARNING

Heavy Objects!

Ensure that all the lifting equipment used is properly rated for the weight of the unit being lifted. Each of the cables (chains or slings), hooks, and shackles used to lift the unit must be capable of supporting the entire weight of the unit. Lifting cables (chains or slings) may not be of the same length. Adjust as necessary for even unit lift. Other lifting arrangements could cause equipment or property damage. Failure to follow instructions above or properly lift unit could result in unit dropping and possibly crushing operator/ technician which could result in death or serious injury.

Note: Use spreader bars as shown in the diagram. Refer to the Installation manual or nameplate for the unit weight. Refer to the Installation Instructions located inside the side control panel for further rigging information.

1. A center-of-gravity illustration and the dimensional data is shown in Figure 22, p. 38 and Table 15, p. 38.
2. Attach adequate strength lifting slings to all four lifting lugs on 20-36 ton units and all six lifting lugs on the 40-130 ton units. The minimum distance between the lifting hook and the top of the unit should be 7 feet for 20-36 ton units and 12 feet for 40-130 ton units. Figure 25, p. 42 illustrates the installation of spreader bars to protect the unit and to facilitate a uniform lift. Table 16, p. 39 lists the typical unit operating weights.
3. Test-lift the unit to ensure it is properly rigged and balanced, make any necessary rigging adjustments. Slightly pitch the unit (no more than 1 ft) so the condenser end is above the return end of the unit. This will aid in aligning the unit with the roof curb described in step 5.
4. Lift the unit and position it over the curb and pedestal. (These units have a continuous base rail around the air handler section which matches the curb.
5. Align the base rail of the unit's air handler section with the curb rail while lowering the unit onto the curb. Make sure that the gasket on the curb is not damaged while positioning the unit. (The pedestal simply supports the unit's condenser section)

A cross section of the juncture between the unit and the roof curb is shown in Figure 26, p. 43.

Figure 25. Unit rigging

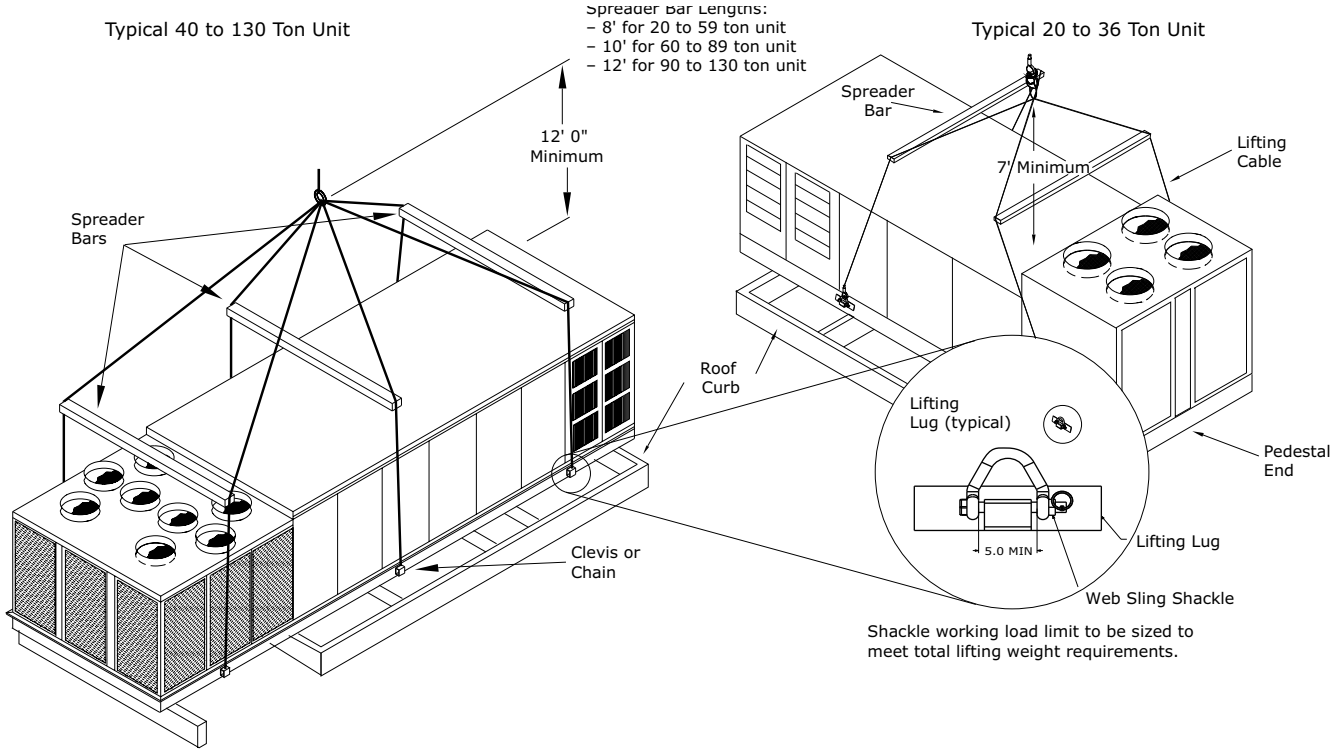

Figure 26. Typical unit base and roof curb cross section

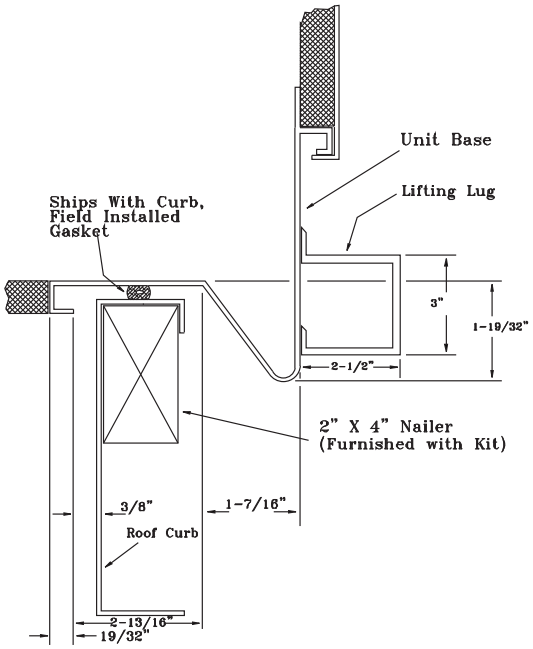

General Unit Requirements

⚠WARNING

Live Electrical Components!

During installation, testing, servicing and troubleshooting of this product, it may be necessary to work with live electrical components. Have a qualified licensed electrician or other individual who has been properly trained in handling live electrical components perform these tasks. Failure to follow all electrical safety precautions when exposed to live electrical components could result in death or serious injury.

The checklist listed below is a summary of the steps required to successfully install a Commercial rooftop unit. This checklist is intended to acquaint the installing personnel with what is required in the installation process. It does not replace the detailed instructions called out in the applicable sections of this manual.

- Check the unit for shipping damage and material shortage; file a freight claim and notify Trane office.
- Verify that the installation location of the unit will provide the required clearance for proper operation.
- Assemble and install the roof curb per the current edition of the curb installation guide.
- Fabricate and install ductwork; secure ductwork to curb.
- Install pitch pocket for power supply through building roof (If applicable).
- Rigging the unit.
- Set the unit onto the curb; check for levelness.
- Ensure unit-to-curb seal is tight and without buckles or cracks.
- Install and connect condensate drain lines to each evaporator drain connection.
- Remove the shipping hold-down bolts and shipping channels from the supply and exhaust/return fans with rubber or spring isolators.
- Check all optional supply and exhaust/return fan spring isolators for proper adjustment.
- Verify all discharge and liquid line service valves (one per circuit) are back seated.

Main Electrical Power Requirements

- Verify that the power supply complies with the unit nameplate specifications.
- Inspect all control panel components; tighten any loose connections.
- Connect properly sized and protected power supply wiring to a field-supplied/installed disconnect and unit
- Properly ground the unit.

Note: All field-installed wiring must comply with NEC and applicable local codes.

Electric Heat Unit Requirements

All SEHL and SEHK Units (380 minimum voltage)

- Verify that the power supply complies with the electric heater specifications on the unit and heater nameplate.
- Inspect the heater junction box and control panel; tighten any loose connections.
- Check electric heat circuits for continuity.

SEHL Units w/200V or 230V Electric Heat (requires separate power supply to heater)

- Connect properly sized and protected power supply wiring for the electric heat from a dedicated, field-supplied/installed disconnect to terminal block 4TB2, or to an optional unit-mounted disconnect switch 4S15.

Gas Heat (SFH_) Requirements

- Gas supply line properly sized and connected to the unit gas train.
- All gas piping joints properly sealed.
- Drip leg Installed in the gas piping near the unit.
- Gas piping leak checked with a soap solution. If piping connections to the unit are complete, do not pressurize

piping in excess of 0.50 psig or 14 inches w.c. to prevent component failure.

- Main supply gas pressure adequate.
- Flue Tubes clear of any obstructions.
- Factory-supplied flue assembly installed on the unit.
- Connect the ¾" CPVC furnace drain stubout to a proper condensate drain.

Hot Water Heat (SLH_) Requirements

- Route properly sized water piping through the base of the unit into the heating section.
- Install the factory-supplied, 3-way modulating valve.
- Complete the valve actuator wiring.

Steam Heat (SSH_) Requirements

- Install an automatic air vent at the top of the return water coil header.
- Route properly sized steam piping through the base of the unit into the heating section.
- Install the factory-supplied, 2-way modulating valve
- Complete the valve actuator wiring.
- Install ½", 15-degree swing-check vacuum breaker(s) at the top of each coil section. Vent breaker(s) to the atmosphere or merge with return main at discharge side of steam trap.
- Position the steam trap discharge at least 12" below the outlet connection on the coil.
- Use float and thermostatic traps in the system, as required by the application.

O/A Pressure Sensor and Tubing Installation (units with Statitrac or return fans)

- O/A pressure sensor mounted to the roof bracket.
- Factory-supplied pneumatic tubing installed between the O/A pressure sensor and the connector on the vertical support.
- Field-supplied pneumatic tubing connected to the proper fitting on the space pressure transducer located in the filter section, and the other end routed to a suitable sensing location within the controlled space (Statitrac only).

Modulating Reheat Dehumidification (S_HL) Requirements

- Install (5U108) humidity sensor in space or return duct
- Complete field wiring of humidity sensor to ECEM (1TB16).

Condensate Drain Connections

Each S_HL and S_HK unit is provided with 1" evaporator condensate drain connections (two on each side of the unit for FC supply fans and one on each side of the unit for DDP supply fans).

Due to the size of these units, all condensate drain connections must be connected to the evaporator drain connections. Refer to the appropriate illustration in Figure 14 and Figure 17 for the location of these drain connections.

Condensate traps must be installed because drain connections are in a negative pressure environment. Install the P-traps at the unit using the guidelines in Figure 28.

Pitch the drain lines at least ½ inch for every 10 feet of horizontal run to assure proper condensate flow. Do not allow the horizontal run to sag causing a possible double-trap condition which could result in condensate backup due to “air lock.”

Figure 27. Condensate drain locations

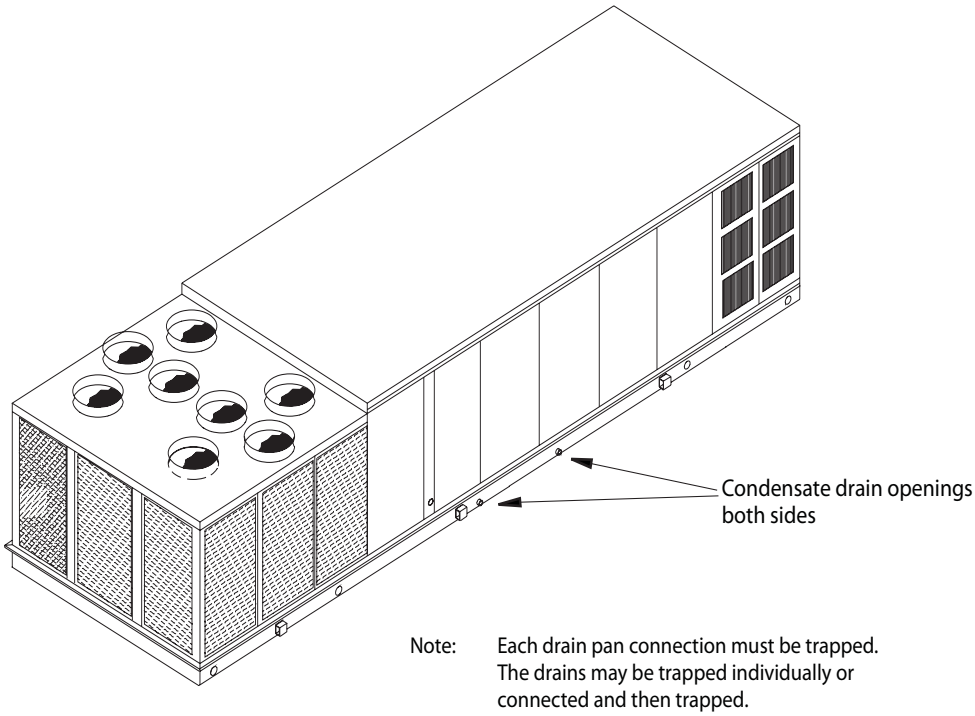

Units with Gas Furnace

Units equipped with a gas furnace have a ¾" CPVC drain connection stubbed out through the vertical support in the gas heat section. It is extremely important that the condensate be piped to a proper drain. Refer to the appropriate illustration in Figure 14 and Figure 17 for the location of the drain connection.

Note: Units equipped with an optional modulating gas furnace will likely operate in a condensing mode part of the time.

An additional 1¼" non-connectable water drain is located in the base rail within the heating section.

Ensure that all condensate drain line installations comply with applicable building and waste disposal codes.

Figure 28. Condensate trap installation

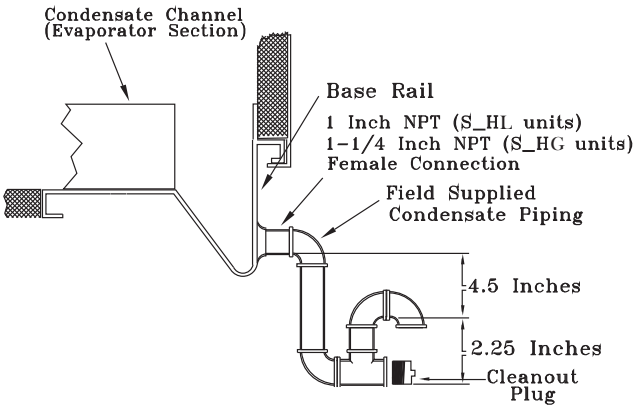

Removing Supply and Exhaust/ Return Fan Shipping Channels (motors >5 Hp)

Each FC supply fan assembly and exhaust fan assembly for S_HL units shipped with a motor larger than 5 HP is equipped with rubber isolators (as standard) or optional spring isolators. Each DDP supply fan assembly for SAHF and SXHL units is equipped with spring isolators. Each return fan assembly for S_HL units shipped with a motor larger than 5 HP is equipped with spring isolators. Shipping channels are installed beneath each fan assembly and must be removed. To locate and remove these channels, refer to Figure 30 and Figure 32, and use the following procedures:

Rubber Isolators

1. Remove and discard the shipping bolts from the fan assembly rails.
2. Elevate the fan-and-motor assembly and slide the shipping channels out from between the fan assembly rails and the unit's base rail.
3. Lower the fan-and-motor assembly onto the isolators. Make sure that the pins at the top of the isolators are engaged in the corresponding holes on the fan assembly.
4. Verify that the fan assembly is being supported by the isolators.

Spring Isolators

See Figure 30, Figure 32, Figure 31 and Figure 33 for spring isolator locations.

1. Remove and discard the shipping tie down bolts.
2. Remove the shipping channels and discard.

Note: Fan assemblies not equipped with rubber or spring isolators have mounting bolts at the same locations and must not be removed.

Note: If return fan backside spring isolator repair/ replacement is required, access the backside of the return fan by entering the unit filter section. Remove the top pivot bearings from the three fixed- position return damper blades (bolted together as a single section with an angle brace). Lift the three-blade section as a single unit from the return damper assembly and set aside or lean in against the return fan frame. Then enter the return fan compartment from the filter section to perform service work on the rear isolators.

Optional DDP Supply Fan Shipping Channel Removal and Isolator Spring Adjustment

Shipping Tie Down and Isolator Spring Adjustment

Remove shipping tie down bolt and washer (4—20 to 30 ton, 6—40 to 55 ton, 8—60 to 75 ton). Leave shipping channels in place. Verify spring height is 0.1" to 0.2" above shipping channel. Spring height is factory set but verify and adjust as needed as follows:

1. Back off ALL spring isolator jam nuts (4) at top of assembly (adjusting one spring effects all others)
2. Turn adjustment bolt (make small adjustments; again each change effects all other springs. Clockwise raises; counter clockwise lowers).
3. When correctly adjusted re-tighten jam nuts and remove shipping channels. Do NOT remove electrical ground wire strap between isolation base and unit base.

Figure 29. DDP shipping channel removal, isolator spring adjustment

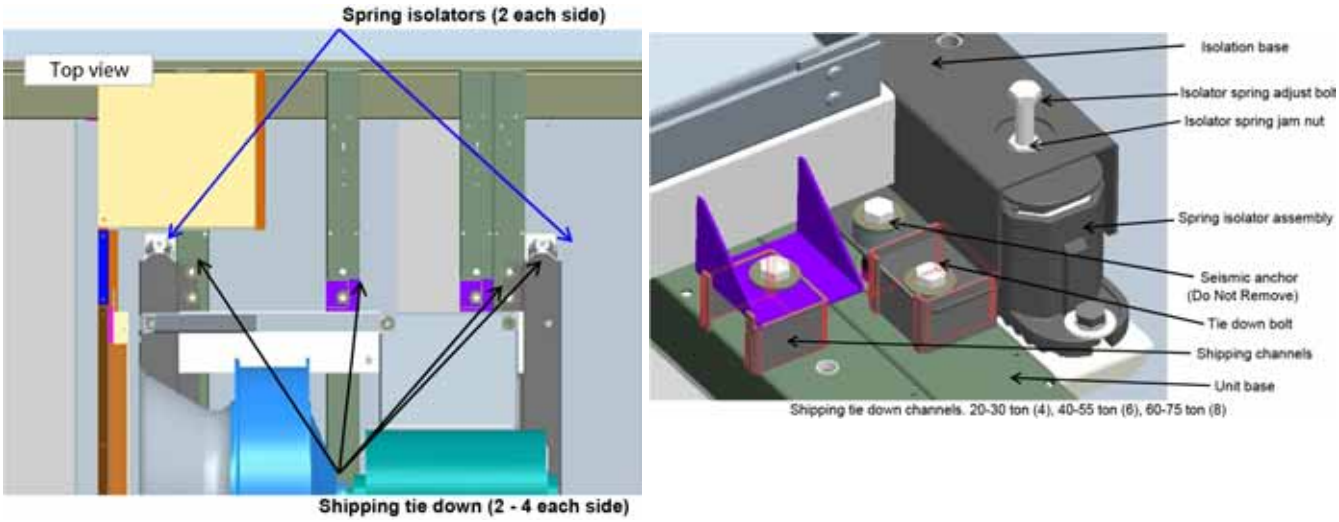

Figure 30. Removing supply and exhaust fan assembly shipping hardware (20 to 89 ton)

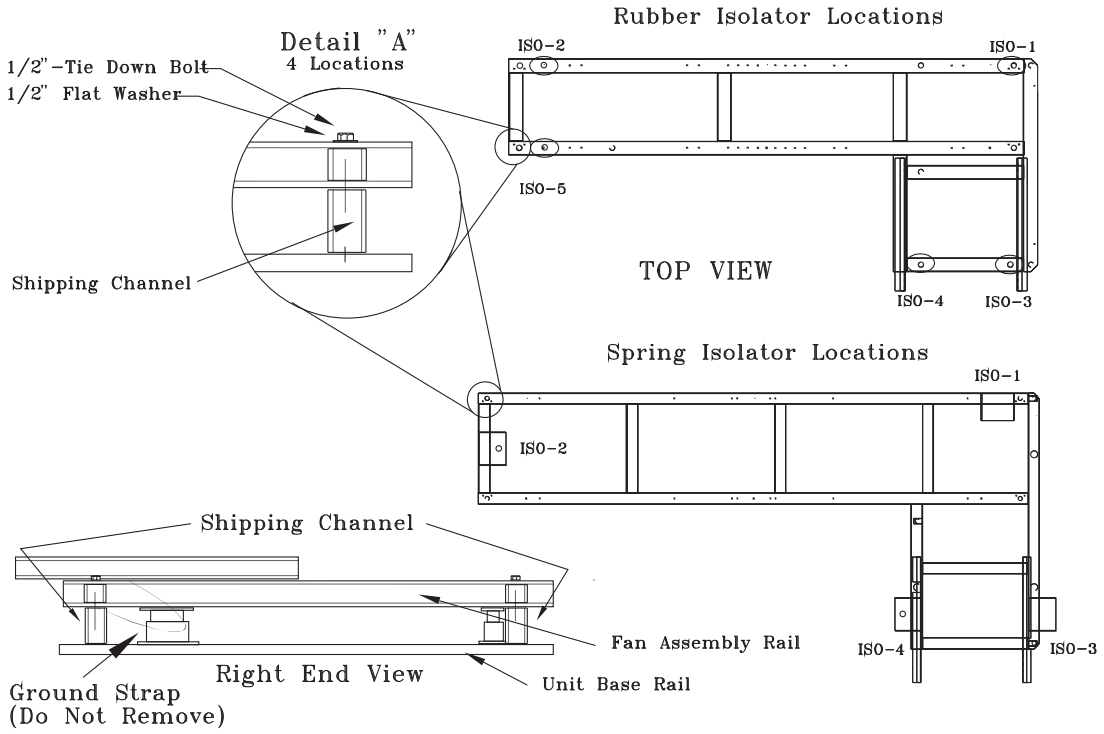

Figure 31. Removing supply and exhaust fan assembly shipping hardware (90 to130 ton)

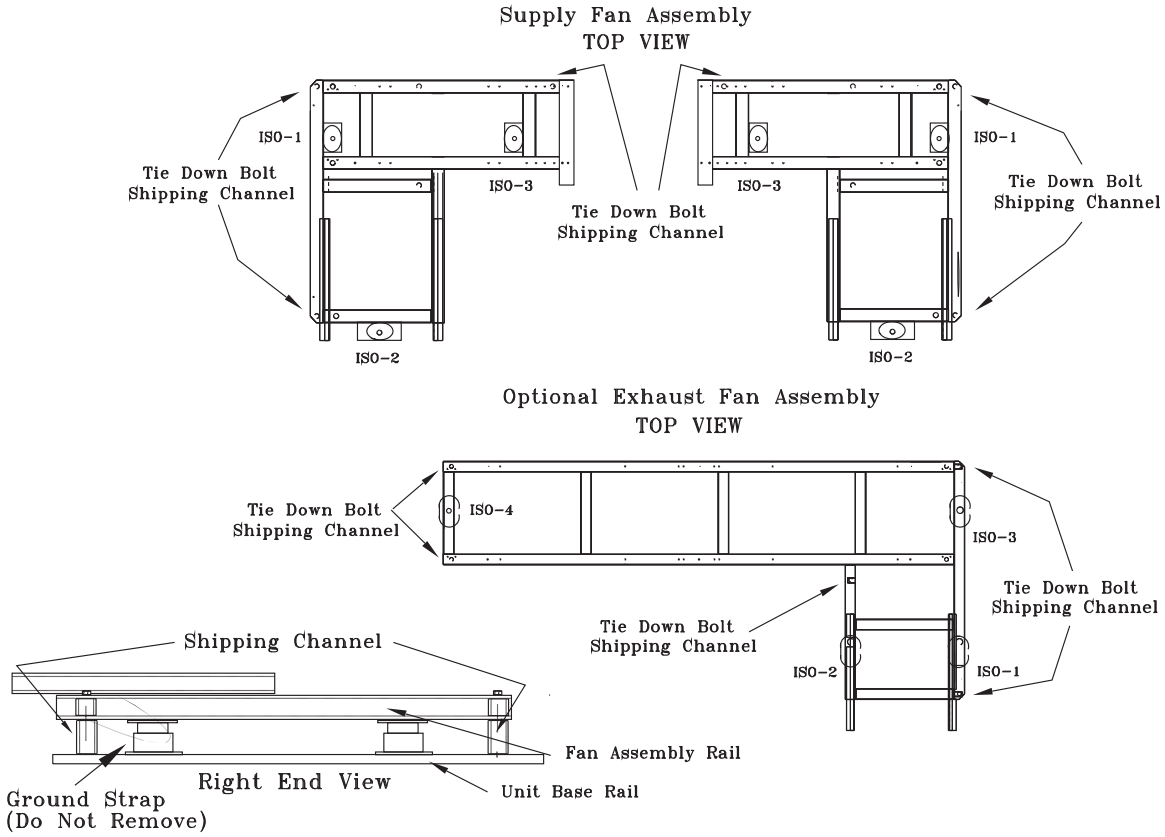

Figure 32. Removing return fan assembly shipping hardware (20 to 89 ton)

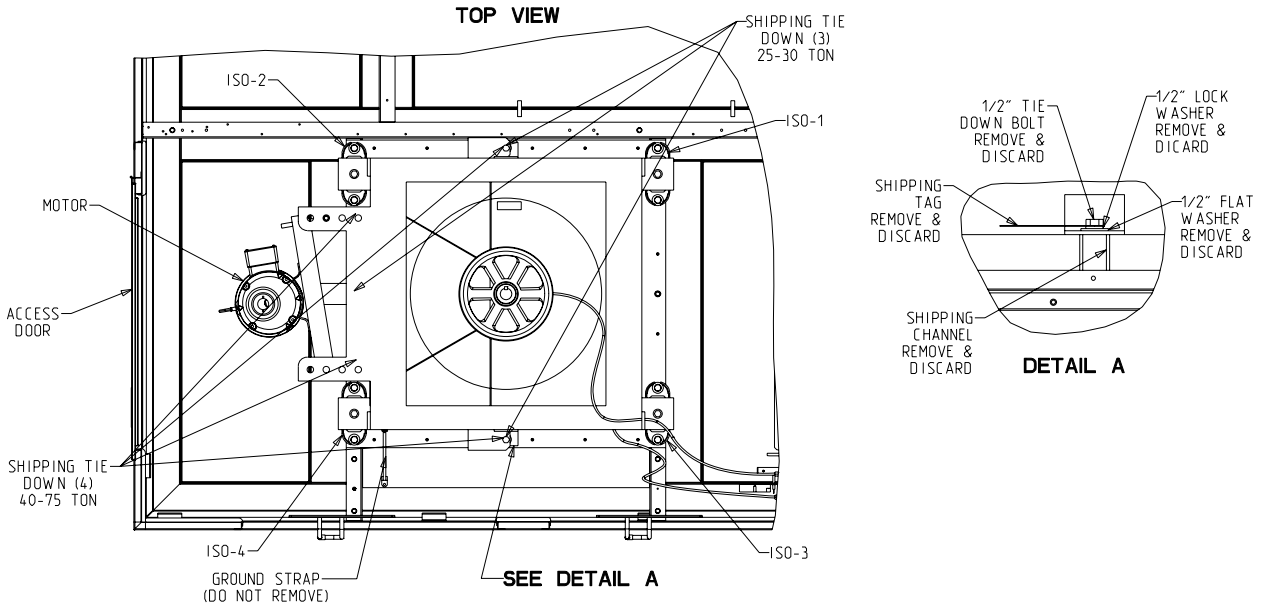

O/A Sensor and Tubing Installation

An outside air pressure sensor ships with all units designed to operate on variable air volume applications, units equipped with a return fan, or constant volume units with 100% modulating exhaust with Statitrac.

On VAV systems, a duct pressure transducer (3U60) and the outside air sensor is used to control the discharge duct static pressure to within a customer-specified parameter.

On CV and VAV units equipped with 100% modulating exhaust with Statitrac, a space pressure transducer (3U62) and the outside air sensor is used to control the exhaust fan and dampers to relieve static pressure to within a customer-specified parameter within the controlled space.

On units equipped with a return fan, a return pressure transducer (3U106) is connected to the O/A sensor for comparison with return plenum pressure.

Refer to Figure 33, p. 50 and the following steps to install the sensor and the pneumatic tubing.

1. Remove the O/A pressure sensor kit located inside the filter section. The kit contains the following items:
   - O/A static pressure sensor with sensor mounting
   - Bracket
   - 50' of 3/16" O.D. pneumatic tubing
   - Mounting hardware
2. Using two #10-32 x 1¾" screws provided, install the sensor's mounting bracket to the factory-installed bracket (near the filter section).
3. Using the #10-32 x ½" screws provided, install the O/A static pressure sensor vertically to the sensor bracket.
4. Remove the dust cap from the tubing connector located below the sensor in the vertical support.
5. Attach one end of the 3/16" O.D. factory-provided pneumatic tubing to the sensor's top port, and the other end of the tubing to the connector in the vertical support. Note that most of the tubing is not needed. Discard any excess tubing.

Units with Statitrac

1. Open the filter access door, and locate the pressure transducer mounting plate illustrated in Figure 33. There are three tube connectors mounted on the left of the solenoid and transducers.
2. Connect one end of the field-provided 3/16" O.D. pneumatic tubing for the space pressurization control to the bottom fitting.
3. Route the opposite end of the tubing to a suitable location inside the building. This location should be the largest open area that will not be affected by sudden static pressure changes.

Remove Evaporative Condenser Fan Shipping Brackets

To remove shipping brackets

Important: Remove fan shipping brackets before startup. Failure to remove brackets could result in fan damage.

Evaporative condensers are shipped with fan shipping brackets to reduce damage caused by vibration during shipment. Before unit startup, remove fan shipping brackets. To remove the shipping brackets, start from the side opposite to the drain actuator (see Figure 90, p. 131), using the following steps:

1. Loosen the screw for the bracket that holds the inlet louvers below the door side.
2. Remove inlet louvers and set to the side.

   Note: Service technician may need to step on the horizontal surface of FRP coated base. Step with care.

3. Unscrew the bolt in the middle of the door. Keep the bolt in a safe place.
4. Lift one door with handle until it touches the top. Swivel bottom of door to remove it from the door opening and set it to the side.
5. Slide and remove the middle mist eliminator section so that the shipping bracket is visible.
6. Use screw gun to unscrew the two screws that hold the fan shipping bracket. The bracket should drop down but still remain engaged with a hook on the bracket.
7. Go to the other side of the unit and follow the procedure for inlet louver and door removal (see steps 1–6).
8. Hold the bracket with one hand and remove remaining two screws.
9. Remove the bracket and all the removed screws from the unit.

Important: Make sure no screws remain in the coil area.

10. Reinstall inlet louvers, mist eliminators and louvers.
11. Check that the direction of arrow on the inlet louver is correct.

Evaporative Condenser Make-up Water and Drain Line Installation

Make-up Water and Drain Lines

Water Supply Source

The supply line should be designed to provide a minimum supply of water within customary domestic supply pressures of 35 to 60 psig. Dynamic pressure (measured with the valve open) will allow approximately 30 GPM to enter the sump through the makeup water valve when the sump is empty. The unit uses about 2-4 GPM. Attach a hand valve at the inlet for use during inspection and maintenance; an inlet strainer is recommended as well.

Make-up water inlet connection is a ¾" PVC slip connector. Care must be taken to ensure the water line upstream of the water solenoid valve will not freeze. Insulating the line and utilizing heat tape is recommended if ambient temperatures below 32° F are expected.

Water Quality

Overall performance of any water-cooled device can be affected by suspended particulates, mineral concentration, trash and debris resulting in clogging and heat transfer loss. The evaporative-cooled condenser is designed to greatly minimize problems with these impurities.

However, float valves and solenoid valves are used to control the incoming water. If the incoming water contains contaminants, sand or other objects, an incoming line strainer with a 80 to 100 mesh screen is required. The inlet line should be flushed prior to connection to the unit, whether or not there is a strainer.

Note: Backflow preventer to be field provided and installed by others.

Water Drain Schedule 80 PVC pipe of 1¼" is normally adequate for sump water drain. Periodically, the sump is emptied and flushed to eliminate accumulated dirt, debris, and minerals.

Concentration of these foreign substances will increase as the system operates. The evaporative process releases essentially pure water vapor into the atmosphere, leaving the impurities behind that accumulate in the sump.

Although these impurities are present in the original make-up water, their concentration will be higher in the sump discharge. Care and judgment should be exercised when selecting a discharge site.

Local Site Discharge

Rooftop or simple storm sewer discharge is generally acceptable. Do not routinely direct the sump discharge onto an area where higher concentrations will adversely affect that area, e.g., continued sump discharge into a flower bed, where the input water contains CaCO3 (lime), will eventually decrease the pH of the soil.

Sewer Discharge

The quantities of mineral and debris flushed are actually very small, and do not cause problems when diluted in normal sewer flow. However, local, state or federal standards and restrictions must be followed in any given locality.

Make Up Water Solenoid Valve

This valve is controlled by the UCM based on water level in the sump, as well as whether a call for mechanical cooling exists.

During low ambient temperatures, the solenoid valve will be de-energized preventing water from further filling sump. The sump drain valve opens to empty sump of water. Operation can be extended to 10 deg by providing an optional sump heater.

Drain Valve

The drain valve is shipped to “drain during power loss conditions.” If “hold during power loss conditions” is desired, refer to “Evaporative Condenser Drain Valve Setup,” p. 89.

Figure 33. Pressure sensing

Outside Air Sensing Kit

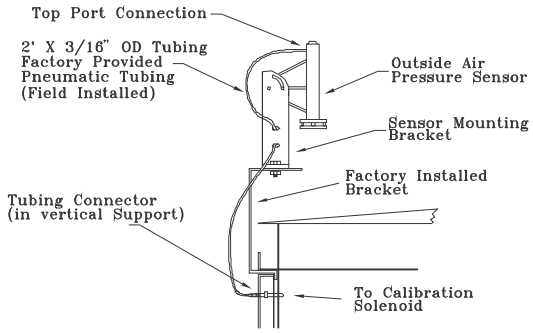

Duct, Space and Return Plenum Pressure Transducer Tubing Schematic

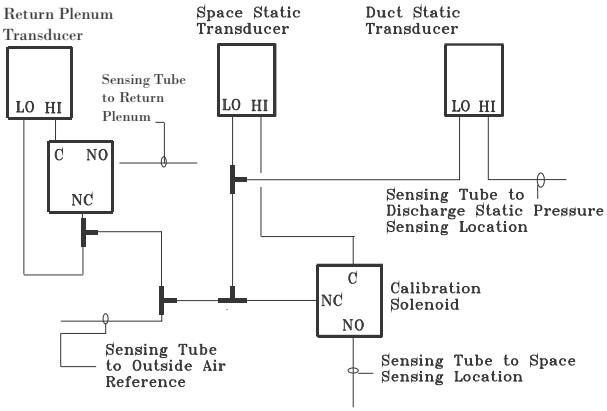

Duct and Space Static Pressure Control Component Layout

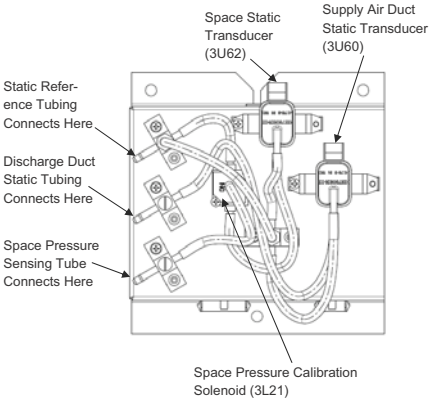

Return Fan Plenum Pressure Control Component Layout

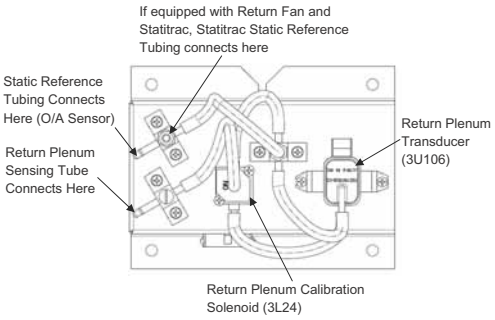

Gas Heat Units (SFH_)

All internal gas piping is factory installed and pressure leak tested before shipment. Once the unit is set into place, the gas supply line must be field connected to the elbow located inside the gas heat control compartments.

⚠WARNING

Hazardous Gases and Flammable Vapors!

Exposure to hazardous gases from fuel substances have been shown to cause cancer, birth defects or other reproductive harm. Improper installation, adjustment, alteration, service or use of this product could cause flammable mixtures. To avoid hazardous gases and flammable vapors follow proper installation and set up of this product and all warnings as provided in this manual. Failure to follow all instructions could result in death or serious injury.

When using dry nitrogen cylinders for pressurizing units for leak testing, always provide a pressure regulator on the cylinder to prevent excessively high unit pressures. Never pressurize unit above the maximum recommended unit test pressure as specified in applicable unit literature. Failure to properly regulate pressure could result in a violent explosion, which could result in death or serious injury or equipment or property-only-damage.

Access holes are provided on the unit as illustrated in Figure 17, p. 33 to accommodate a side or bottom pipe entry on 20-89 ton units and in Figure 21, p. 37 on 90-130 ton units. Use the following the guidelines to enhance both the installation and operation of the furnace.

- In the absence of local codes, the installation must conform with the American National Standard Z223-1a of the National Fuel Gas Code (latest edition).
- To assure sufficient gas pressure at the unit, use Table 21, p. 52 as a guide to determine the appropriate gas pipe size for the unit heating capacity listed on the unit's nameplate.
- If a gas line already exists, verify that it is sized large enough to handle the additional furnace capacity before connecting to it.
- Take all branch piping from any main gas line from the top at 90 degrees or at 45 degrees to prevent moisture from being drawn in with the gas.
- Ensure that all piping connections are adequately coated with joint sealant and properly tightened. Use a piping compound that is resistant to liquid petroleum gases.
- Provide a drip leg near the unit.
- Install a pressure regulator at the unit that is adequate to maintain 7" w.c. for natural gas while the furnace is operating at full capacity.

Note: Gas pressure in excess of 14" w.c. or 0.5 psig will damage the gas train.

- Failure to use a pressure regulating device will result in incorrect gas pressure. This can cause erratic operation due to gas pressure fluctuations as well as damage the gas valve. Over sizing the regulator will cause irregular pulsating flame patterns, burner rumble, potential flame outages, and possible gas valve damage.
- If a single pressure regulator serves more than one rooftop unit, it must be sized to ensure that the inlet gas pressure does not fall below 7" w.c. with all the furnaces operating at full capacity. The gas pressure must not exceed 14" w.c. when the furnaces are off.
- Provide adequate support for all field-installed gas piping to avoid stressing the gas train and controls.
- Leak test the gas supply line using a soap-and-water solution or equivalent before connecting it to the gas train.
- Check the supply pressure before connecting it to the unit to prevent possible gas valve damage and the unsafe operating conditions that will result.

Note: Do not rely on the gas train shutoff valves to isolate the unit while conducting gas pressure/leak test. These valves are not designed to withstand pressures in excess of 14"w.c. or 0.5 psig.

Connecting the Gas Supply Line to the Furnace Gas Train

Follow the steps below to complete the installation between the supply gas line and the furnace. Refer to Figure 34 to Figure 37 for the appropriate gas train configuration.

1. Connect the supply gas piping using a "ground-joint" type union to the furnace gas train and check for leaks.
2. Adjust the inlet supply pressure to the recommended 7" to 14" w.c. parameter for natural gas.
3. Ensure that the piping is adequately supported to avoid gas train stress.

Table 20. Specific gravity multipliers

Specific Gravity	Multiplier
0.50	1.10
0.55	1.04
0.60	1.00
0.65	0.96

Table 21. Sizing natural gas pipe mains and branches

Gas Supply Pipe Run (ft)	Gas Input (Cubic Feet/Hour)*					
	1-¼" Pipe	1-½" Pipe	2" Pipe	2-½" Pipe	3" Pipe	4" Pipe
10	1050	1600	3050	4800	8500	17500
20	730	1100	2100	3300	5900	12000
30	590	890	1650	2700	4700	9700
40	500	760	1450	2300	4100	8300
50	440	670	1270	2000	3600	7400
60	400	610	1150	1850	3250	6800
70	370	560	1050	1700	3000	6200
80	350	530	990	1600	2800	5800
90	320	490	930	1500	2600	5400
100	305	460	870	1400	2500	5100
125	275	410	780	1250	2200	4500
150	250	380	710	1130	2000	4100
175	225	350	650	1050	1850	3800
200	210	320	610	980	1700	3500

* Table is based on a specific gravity of 0.60. Use Table 20 for the specific gravity of the local gas supply.

Table 22. Modulating gas heat settings

Natural Gas					
		Full Modulation	Partial Modulation	Gas Valve Settings	
Heater Size (MBH)	Gas Orifice	Air Damper Actuator Voltage Range (VDC)	Air Damper Actuator Voltage Range (VDC)	Left Setting Pgas/Pair	Right Setting (Low fire bias)
500	#21	7–10	7–9.7	2.3	-1
850	#H	6–10	6–8.7	1.3	-1
1000	#N	5–10	5–8.7	0.9	0

LP					
		Full Modulation	Partial Modulation	Gas Valve Settings	
Heater Size (MBH)	Gas Orifice	Air Damper Actuator Voltage Range (VDC)	Air Damper Actuator Voltage Range (VDC)	Left Setting Pgas/Pair	Right Setting (Low fire bias)
500	#34 / #53	7–10	7–9.7	6	1
850	#32	6–10	6–8.7	3.2	1
1000	#29	5–10	5–8.7	1.9	0

Note: Valve actuator settings are approximate and may require fine tuning to properly set. Right (fine) settings given are in notches from the zero midpoint location on sight gage.

Table 23. Gas heating capacity altitude correction factors

	Altitude (Ft.)						
	Sea level–2000	2001–2500	2501–3500	3501–4500	4501–5500	5501–6500	6501–7500
Capacity Multiplier	1.00	.92	.88	.84	.80	.76	.72

Note: Correction factors are per AGA Std. 221.30—1964, Part VI, 6.12. Local codes may supersede.

Notes:
1. If more than one unit is served by the same main gas supply, consider the total gas input (cubic feet/hour) and the total length when determining the appropriate gas pipe size.
2. Obtain the specific gravity and BTU/cu ft from the gas company.
3. The following example demonstrates the considerations necessary when determining the actual pipe size.
   Example: A 40' pipe run is needed to connect a unit with a 500 MBH furnace to a natural gas supply having a rating of 1,000 BTU/cu ft and a specific gravity of 0.60 cu ft/hr. To determine the pipe size, use the following: Furnace MBH Input Gas BTU/cu ft (500 MBH) x Multiplier (1.00 from Table 20) cu ft/hr = 500
4. Table 21 indicates that a 1¼" pipe is required.

Figure 34. Unit gas trains (natural gas) 235, 350 MBH

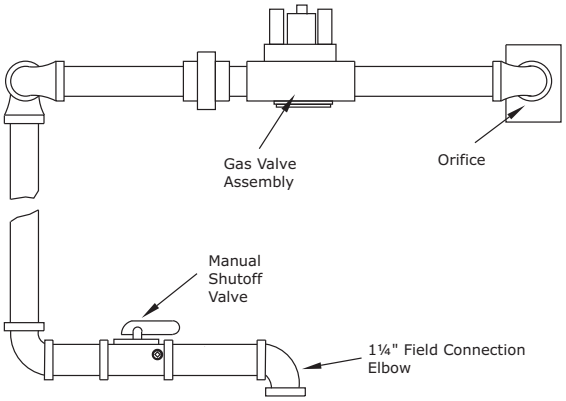

Figure 35. Unit gas trains (natural gas) 500, 850 MBH

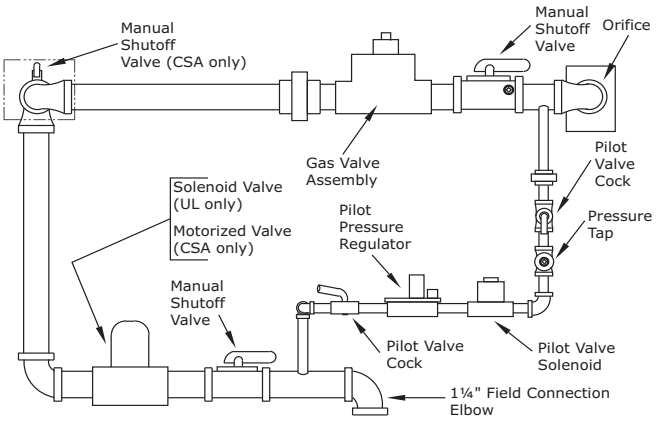

Figure 36. Unit gas trains (natural gas) 1000 MBH

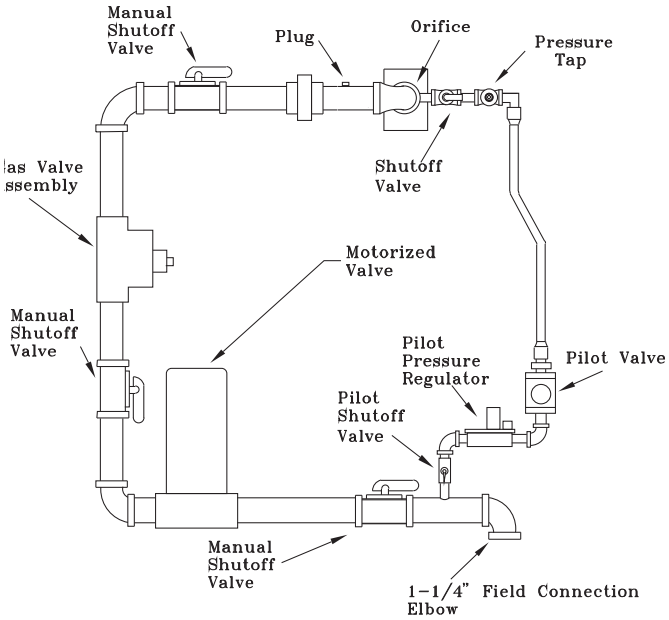

Figure 37. Modulating 500 to 1000 MBH

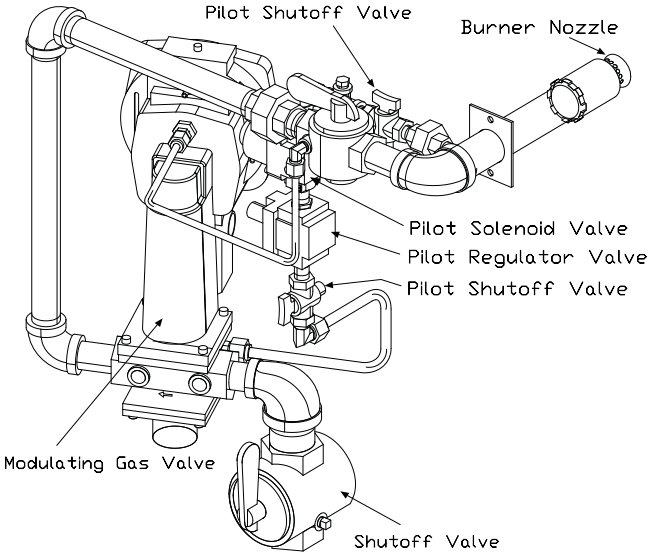

Flue Assembly Installation

1. Locate the flue assembly and the extension (refer to Figure 38 for extension usage) in the ship with section of the unit.
2. Install the flue extension onto the flue assembly as shown in Figure 38.
3. Slide the pipe clamp onto the heater flue tube located inside the heater compartment.
4. Insert the tube on the flue assembly into the hole located in the vertical support for the heat section.
5. Butt both flue tube sections together and center the pipe clamp over joint.
6. Using the pre-punch holes in the flue assembly, extension, and the vertical support, install the appropriate number of mounting brackets. Refer to Figure 38 for details.

Figure 38. Flue assembly

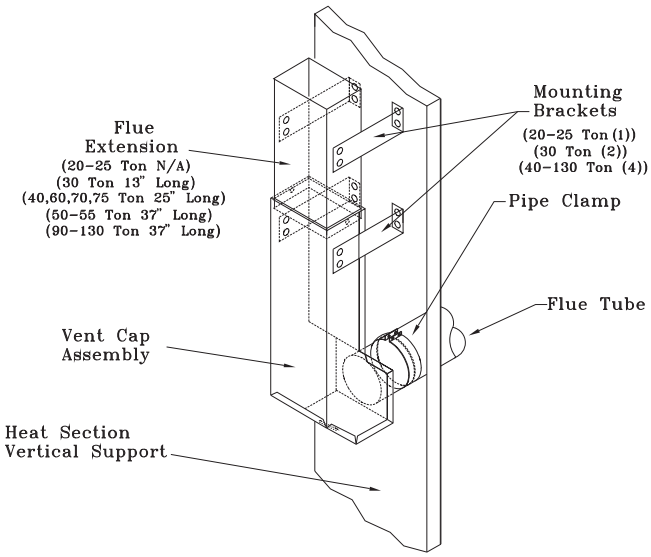

Hot Water Heat Units (SLH_)

Hot water heating coils are factory installed inside the heater section of the unit. Once the unit is set into place, the hot water piping and the factory-provided 3-way modulating valve must be installed. The valve can be installed inside the heat section or near the unit. If the valve is installed in a remote location, use field-supplied wiring to extend the control wires from the heater section to the valve. Two access holes are provided in the unit base as illustrated in Figure 17, p. 33.

Use the following guidelines to enhance both the installation and operation of the "wet heat" system.

Figure 39, p. 55 and Figure 41, p. 56 illustrate the recommended piping configuration for the hot water coil. Table 30, p. 62 lists the coil connection sizes.

Note: The valve actuators are not waterproof. Failure to protect the valve from moisture may result in the loss of heating control.

- Support all field-installed piping independently from the heating coil.
- Use swing joints or flexible connectors adjacent to the heating coil. (These devices will absorb the strains of expansion and contraction).
- All return lines and fittings must be equal to the diameter of the "outlet" connection on the hot water coil.

- Install a “gate” type valve in the supply branch line as close as possible to the hot water main and upstream of any other device or takeoff.
- Install a “gate” type valve in the return branch line as close as possible to the return main and down stream of any other device.
- Install a strainer in the hot water supply branch as shown in Figure 39 and Figure 48.
- Install the 3-way valve in an upright position, piped for valve seating against the flow. Ensure that the valve’s location lends itself to serviceability.
- The Type W hot water coil used in SLHL units is self-venting only when the tube water velocity exceeds 1.5 feet per second (fps). If the tube velocity is less than 1.5 feet per second, either:
  - install an automatic air vent at the top of the return header, using the tapped pipe connection

  or
  - vent the coil from the top of the return header down to the return piping. At the vent connection, size the return piping to provide sufficient water velocity
- Install a “globe” type valve in the Bypass line as shown in Figure 39, p. 55 and Figure 48, p. 72.

Table 24. Connection sizes for hot water and steam coil[a]

Unit Model and Size	Heat Section Capacity[b]	Coil Connections (diameter in inches)	
		Supply	Return
SLH*-20 to 130	High or Low Heat	2½"	2½"
SSHL-20 to 36	High or Low Heat	3"	1¼"
SSHL-40 to 89[c]	High Heat Low Heat	3"	1½"
SSHK-90 to 130	Low Heat(c)	1½”	1"

(a) Type W coils, with center offset headers, are used in SLH* units; type NS coils are used in SSH* units
(b) See Digit 9 of the unit model number to determine the heating capacity.
(c) SSH*—40 to 89 ton units have multiple headers.

Steam Heat Units (SSH_)

Steam heating coils are factory installed inside the heater section of the unit. The coils are pitched, within the units, to provide the proper condensate flow from the coil. To maintain the designed degree of pitch for the coil, the unit must be level.

Once the unit is set into place, the steam piping and the factory-provided two way modulating valve must be installed. The valve can be installed inside the heater section or near the unit. If the valve is installed in a remote location, use field-supplied wiring to extend the control wires from the heater section to the valve. Two access holes are provided in the unit base as illustrated in Figure 17, p. 33.

Use the following guidelines to enhance both the installation and operation of the “wet heat” system.

Figure 41, p. 56 and Figure 42, p. 56 illustrate the recommended piping configurations for the steam coil. Table 30, p. 62 lists the coil connection sizes.

Note: The valve actuators are not waterproof. Failure to protect the valve from moisture may result in the loss of heating control.

- Support all field-installed piping independently from the heating coil.
- Use swing joints or flexible connectors adjacent to the heating coil. (These devices will absorb the strains of expansion and contraction.)
- Install the 2-way valve in an upright position. Ensure that the valve’s location lends itself to serviceability.
- Pitch the supply and return steam piping downward 1" per 10' of run in the direction of flow.
- All return lines and fittings must be equal to the diameter of the “outlet” connection on the steam coil(s). If the steam trap connection is smaller that the coil “outlet” diameter, reduce the pipe size between the strainer and the steam trap connections only.
- Install a ½" 15 degree swing-check vacuum breaker at the top of the return coil header using the tapped pipe connection. Position the vacuum breaker as close to the coil as possible.

Note: Vacuum breakers should have extended lines from the vent ports to the atmosphere or connect each vent line to the return pipe on the discharge side of the steam traps.

- Install a “gate” type valve in the supply branch line as close as possible to the steam main and upstream of any other device.
- Install a “gate” type valve in the return branch line as close as possible to the condensate return main and downstream of any other device.
- Install a strainer as close as possible to the inlet of the control valve and steam trap(s).
- Steam trap selection should be based on the maximum possible condensate flow and the recommended load factors.

  Install a float-and-thermostatic (FT) type trap to maintain proper flow. They provide gravity drains and continuous discharge operation. FT type traps are required if the system includes either of the following:
  - an atmospheric pressure/gravity condensate return
  - a potentially low pressure steam supply
- Position the outlet or discharge port of the steam trap at least 12" below the outlet connection on the coil(s). This will provide adequate hydrostatic head pressure to overcome the trap losses and assure complete condensate removal.

40 to 130 ton units

Utilizes two steam coils stacked together. These two coils must be piped in a parallel arrangement. The steps listed below should be used in addition to the previous steps. Figure 42 illustrates the recommended piping configuration for the steam coils.

Figure 39. Hot water piping (20 to 75 ton)

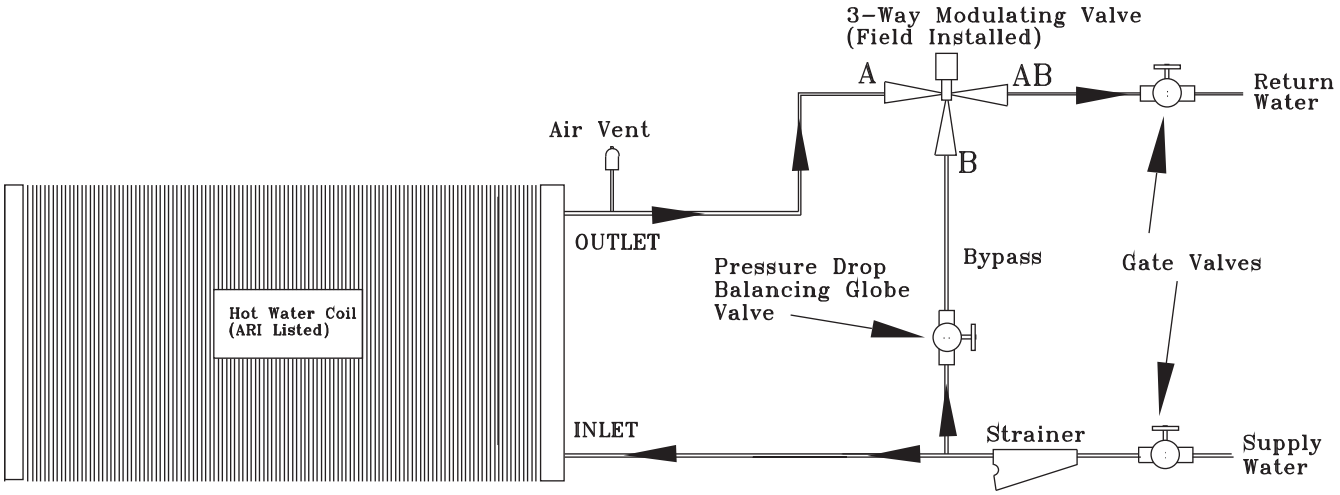

Figure 40. Hot water piping (90 to 130 ton)

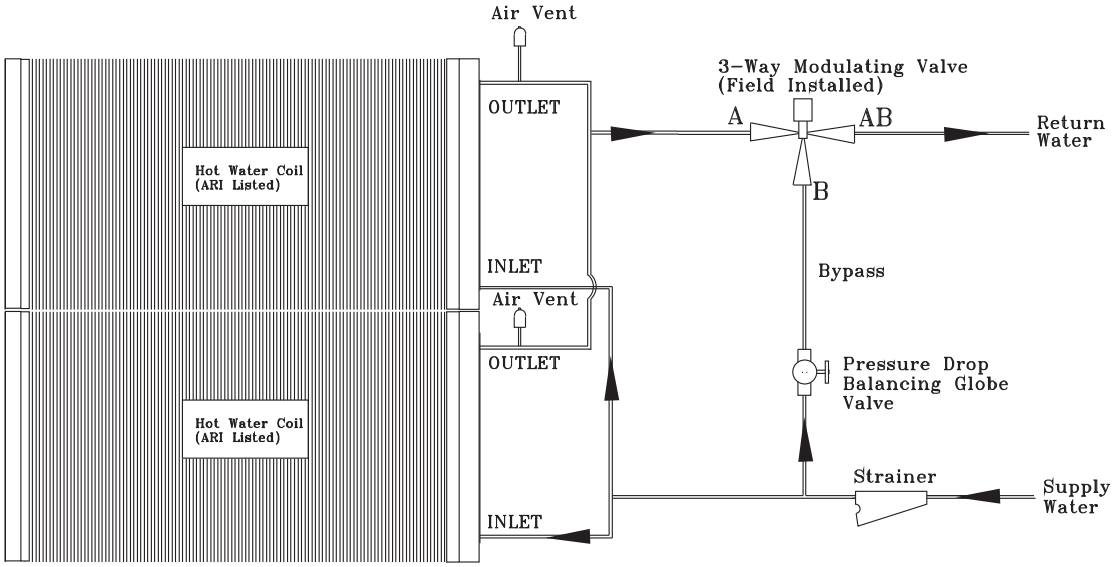

Figure 41. Steam coil piping (20 to 36 ton)

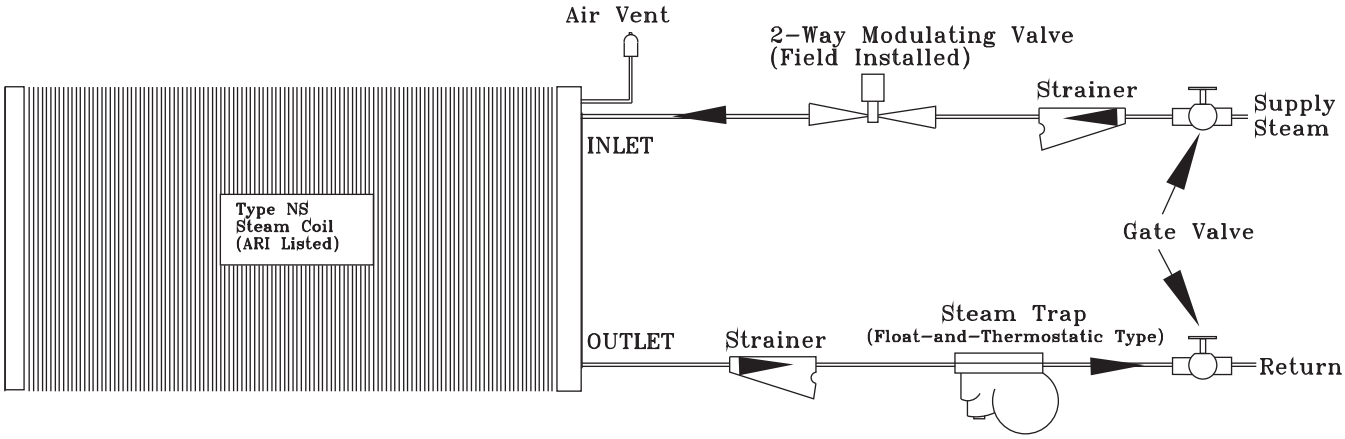

Figure 42. Steam coil piping (40 to 130 ton)

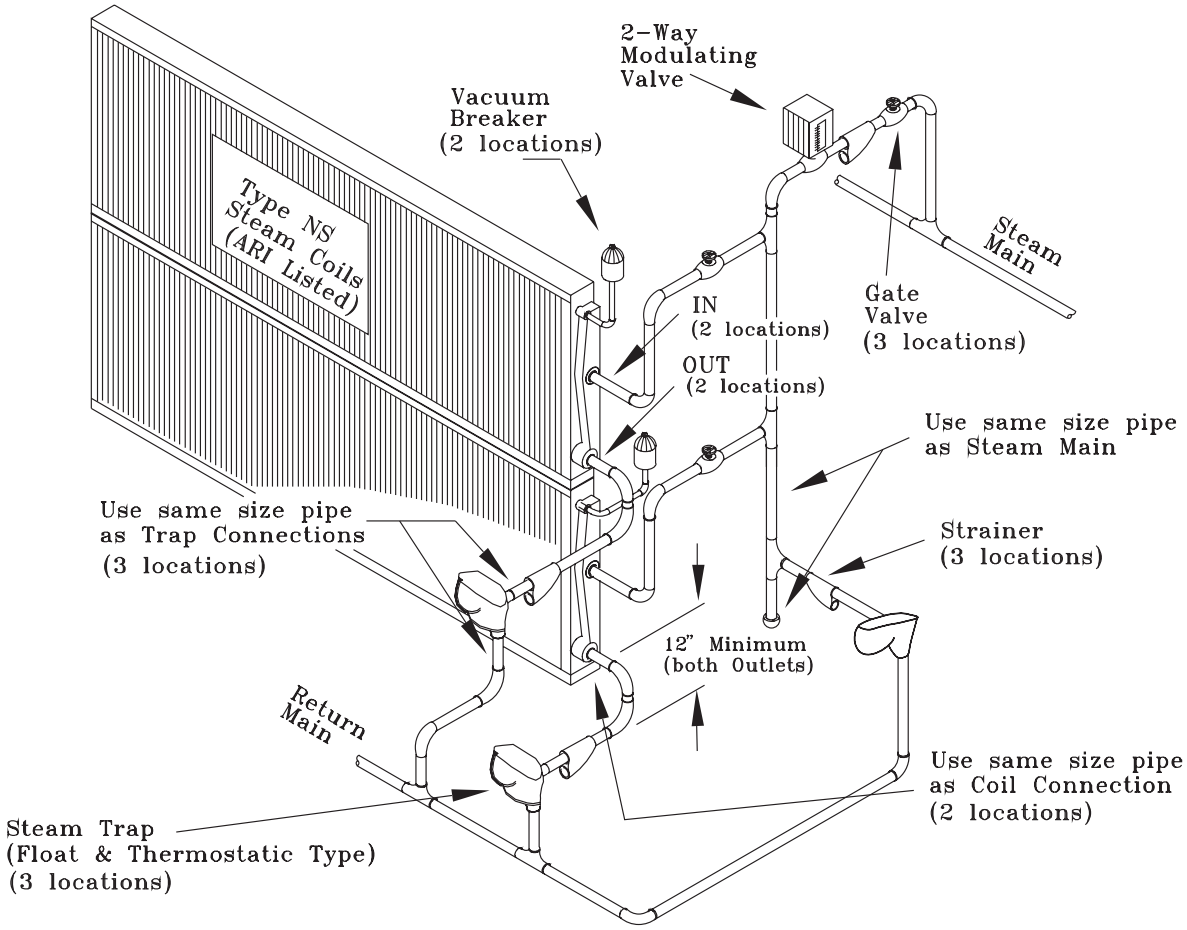

Disconnect Switch External Handle

Factory-mounted Option

Units ordered with the factory-mounted disconnect switch comes equipped with an externally mounted handle. This allows the operator to disconnect power from the unit without having to open the control panel door. The handle locations and its three positions are as follows:

ON—Indicates that the disconnect switch is closed, allowing the main power supply to be applied at the unit.

OFF—Indicates that the disconnect switch is open, interrupting the main power supply to the unit controls.

OPEN COVER/RESET—Turning the handle to this position releases the handle from the disconnect switch, allowing the control panel door to be opened.

Once the door has been opened, it can be closed with the handle in any one of the three positions outlined above, provided it matches the disconnect switch position. See Figure 43.

The handle can be locked in the OFF position. While holding the handle in the OFF position, push the spring loaded thumb key, attached to the handle, into the base slot. Place the lock shackle between the handle and the thumb key. This will prevent it from springing out of position.

An overall layout of the field-required power wiring is illustrated in Figure 44. To ensure the unit's supply power wiring is properly sized and installed, use the following guidelines.

⚠WARNING

Live Electrical Components!

During installation, testing, servicing and troubleshooting of this product, it may be necessary to work with live electrical components. Have a qualified licensed electrician or other individual who has been properly trained in handling live electrical components perform these tasks. Failure to follow all electrical safety precautions when exposed to live electrical components could result in death or serious injury.

Verify that the power supply available is compatible with the unit's nameplate rating for all components. The available power supply must be within 10% of the rated voltage stamped on the nameplate. Use only copper conductors to connect the 3-phase power supply to the unit.

Figure 43. Disconnect switch handle positions

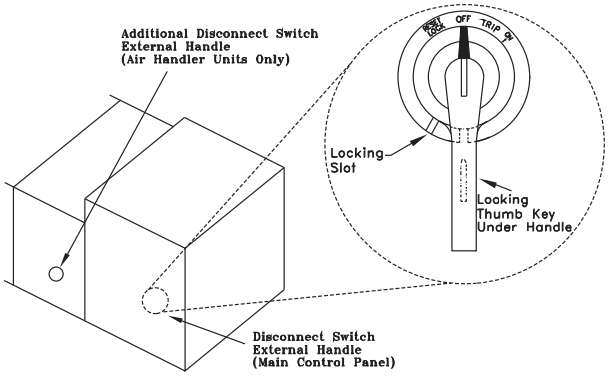

Note: All field-installed wiring must conform to NEC guidelines as well as state and local codes.

⚠CAUTION

Hot Surface!

Surface temperatures may exceed 300°F (150°C) on condensing unit and carbon tank. To avoid possible skin burns, stay clear of these surfaces. If servicing is required allow surfaces to cool or wear protective gear. Failure to do so could result in minor to moderate injury.

NOTICE:

Use Copper Conductors Only!

Unit terminals are not designed to accept other types of conductors. Failure to use copper conductors could result in equipment damage.

Electric Heat Units (SEH_)

⚠WARNING

Proper Field Wiring and Grounding Required!

All field wiring MUST be performed by qualified personnel. Improperly installed and grounded field wiring poses FIRE and ELECTROCUTION hazards. To avoid these hazards, you MUST follow requirements for field wiring installation and grounding as described in NEC and your local/state electrical codes. Failure to follow code could result in death or serious injury.

SEHL (20-89 ton) electric heat units operating on 200/230 volts require two power supplies as illustrated in Figure 44. Unless the unit was ordered with the optional factory mounted, non-fused disconnect switches, two field-supplied disconnect switches must be installed.

The power wires for the electric heat is routed into the electric heat control panel using the through-the-base access provided in the heating section. Refer to the

appropriate illustration in Figure 17, p. 33, (unit base layout and electrical entrance diagram), for dimensional data.

On 20-130 ton units operating on 460/575 volts, only one power entry is required, as illustrated in Figure 44.

Use the information provided in Table 25, p. 61 and the "Power Wire Sizing & Protection Device Equations," to determine the appropriate wire size and Maximum Over current Protection for the heaters/unit.

Note: Each power supply must be protected from short circuit and ground fault conditions. To comply with NEC, protection devices must be sized according to the "Maximum Over current Protection" (MOP) or "Recommended Dual Element" (RDE) fuse size data on the unit nameplate.

Provide grounding for the supply power circuit in the electric heat control box.

Main Unit Power Wiring

⚠WARNING

Proper Field Wiring and Grounding Required!

All field wiring MUST be performed by qualified personnel. Improperly installed and grounded field wiring poses FIRE and ELECTROCUTION hazards. To avoid these hazards, you MUST follow requirements for field wiring installation and grounding as described in NEC and your local/state electrical codes. Failure to follow code could result in death or serious injury.

Figure 47, p. 70 lists the field connection wire ranges for both the main power terminal block 1TB1 and the optional main power disconnect switch 1S14. Table 25, p. 61 lists the component electrical data for 20-130 ton units. The electrical service must be protected from over current and short circuit conditions in accordance with NEC requirements. Protection devices must be sized according to the electrical data on the nameplate. Refer to the "Power Wire Sizing & Protection Device Equations", for determining:

- the appropriate electrical service wire size based on "Minimum Circuit Ampacity" (MCA)
- the "Maximum Over current Protection" (MOP) device
- the "Recommended Dual Element fuse size" (RDE)

If the unit is not equipped with an optional factory-installed, non-fused disconnect switch, a field-supplied disconnect switch must be installed at or near the unit in accordance with the National Electrical Code (NEC latest edition). Refer to the "Power Wire Sizing & Protection Device Equations" (DSS calculation), for determining the correct size.

Location for the electrical service entrance is illustrated in Figure 17, p. 33. Complete the unit's power wiring connections onto either the main terminal block 1TB1, or the factory-mounted, non-fused disconnect switch 1S14, inside the unit control panel. Refer to the customer connection diagram that shipped with the unit for specific termination points.

Provide proper grounding for the unit in accordance with local and national codes.

Figure 44. Typical field power wiring (20 to 89 ton)

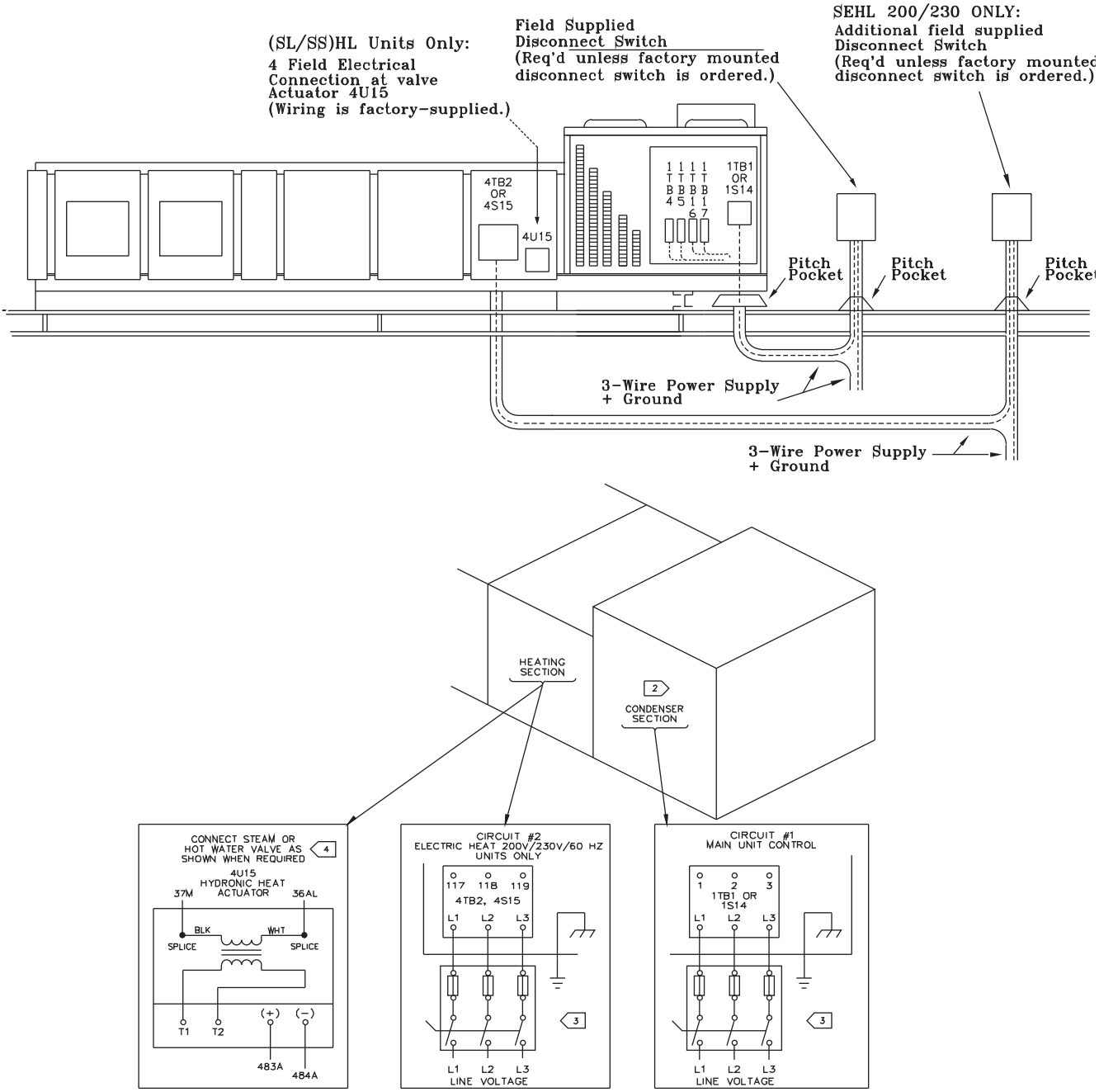

Figure 45. Typical field power wiring (90 to 130 ton)

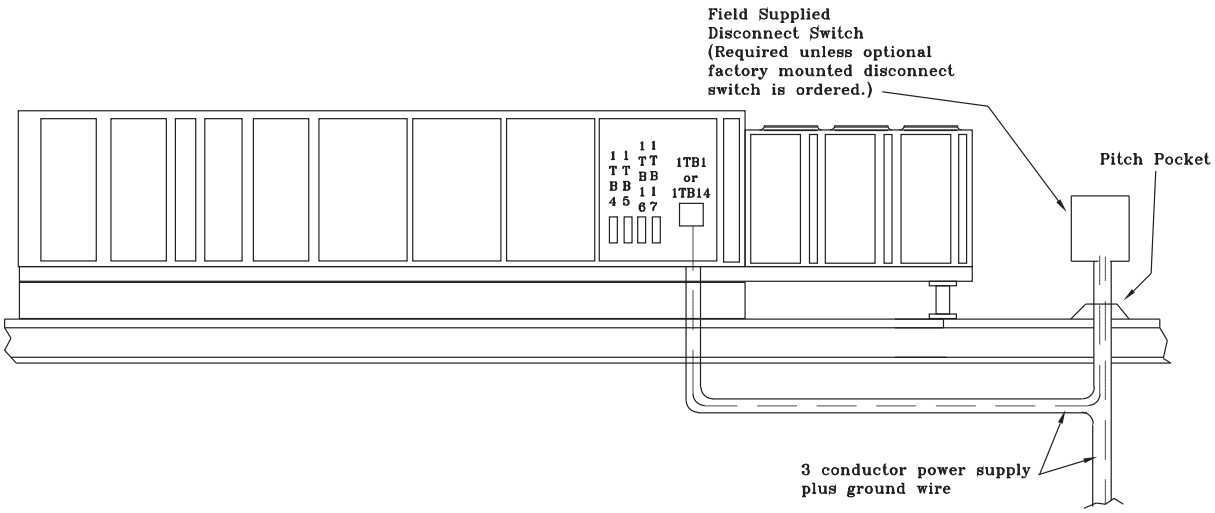

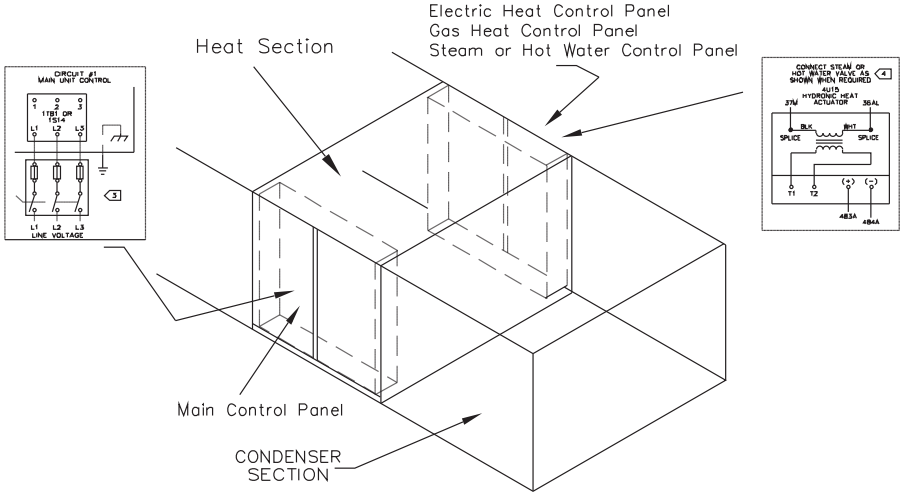

Figure 46. Customer connection wire range

CUSTOMER CONNECTION WIRE RANGE						
NOTES:	UNITS WITH MAIN POWER TERMINAL BLOCK (ALL VOLTAGES)			UNITS WITH MAIN POWER DISCONNECT SWITCH (ALL VOLTAGES)		
	BLOCK SIZE	WIRE QTY	CONNECTOR WIRE RANGE	DISCONNECT SIZE	WIRE QTY	CONNECTOR WIRE RANGE
A. BLOCK SIZE & DISCONNECT SIZE ARE CALCULATED BY SELECTING THE SIZE GREATER THAN OR EQUAL TO 1.15 X (SUM OF UNIT LOADS). SEE UNIT LITERATURE FOR UNIT LOAD VALUES.	335 AMP	(1)	#6 - 350 MCM	100 AMP	(1)	#14 - 1/0
	760 AMP	(2)	#4 - 500 MCM	250 AMP	(1)	#4 - 350 kcmil
	840 AMP	(2)	#2 - 600 MCM	400 AMP	(1) OR	#1 - 600 kcmil OR
					(2)	#1 - 250 kcmil
				600 AMP	(2)	250 - MCM
				1000 AMP	(3)	3/0 - 500 kcmil

Table 25. Compressor electrical service sizing data (20 to 130 tons)

Tonnage	No. of Compressors	200V		230V		460V		575V	
		RLA	LRA	RLA	LRA	RLA	LRA	RLA	LRA
20 Std	2	41.4	267.0	40.3	267.0	19.1	142.0	15.8	103.0
20 Hi Eff	2	41.4	267.0	40.3	267.0	19.1	142.0	15.8	103.0
25 Std	1	41.4	267.0	40.3	267.0	19.1	142.0	15.8	103.0
	1	47.0	304.0	41.0	304.0	20.2	147.0	17.1	122.0
25 Hi Eff	1	41.4	267.0	40.3	267.0	19.1	142.0	15.8	103.0
	1	51.9	315.0	47.0	315.0	22.2	158.0	19.2	136.0
30 Std	2	51.9	315.0	47.0	315.0	22.2	158.0	19.2	136.0
30 Hi Eff	1	51.9	315.0	47.0	315.0	22.2	158.0	19.2	136.0
	1	56.9	351.0	48.8	351.0	25.5	197.0	23.1	135.0
40 Std	2	31.3	203.0	30.4	203.0	13.1	98.0	11.9	84.0
	2	37.3	267.0	31.8	267.0	15.9	142.0	15.2	103.0
40 Hi Eff	4	37.3	267.0	31.8	267.0	15.9	142.0	15.2	103.0
40 Vari Spd	1*	59.9	N/A	52.0	N/A	26.0	N/A	21.7	N/A
	1	31.3	203.0	30.4	203.0	13.1	98.0	11.9	84.0
	1	37.3	267.0	31.8	267.0	15.9	142.0	15.2	103.0
50 Std	4	41.4	267.0	40.3	267.0	19.1	142.0	15.8	103.0
50 Hi Cap & Hi Eff	2	41.4	267.0	40.3	267.0	19.1	142.0	15.8	103.0
	2	47.0	304.0	42.3	304.0	20.2	147.0	17.1	122.0
50 Vari Spd	1*	75.2	N/A	65.2	N/A	32.6	N/A	27.5	N/A
	1	41.4	267.0	40.3	267.0	19.1	142.0	15.8	103.0
	1	47.0	304.0	42.3	304.0	20.2	147.0	17.1	122.0
55 Std & Hi Eff	4	47.0	304.0	42.3	304.0	20.2	147.0	17.1	122.0
55 Vari Spd	1*	75.2	N/A	65.2	N/A	32.6	N/A	27.5	N/A
	1	47.0	304.0	42.3	304.0	20.2	147.0	17.1	122.0
	1	51.9	315.0	47.0	315.0	22.2	158.0	19.2	136.0
60 Std	2	47.0	304.0	42.3	304.0	20.2	147.0	17.1	122.0
	2	51.9	315.0	47.0	315.0	22.2	158.0	19.2	136.0
60 Hi Cap & Hi Eff	4	51.9	315.0	47.0	315.0	22.2	158.0	19.2	136.0
60 Vari Spd	1*	89.9	N/A	77.9	N/A	38.9	N/A	32.7	N/A
	1	51.9	315.0	47.0	315.0	22.2	158.0	19.2	136.0
	1	56.9	351.0	48.8	351.0	25.5	197.0	23.1	146.0
70 Std & Hi Eff	4	56.9	351.0	48.8	351.0	25.5	197.0	23.1	146.0
70 Vari Spd	1*	89.9	N/A	77.9	N/A	38.9	N/A	32.7	N/A
	1	60.5	320.0	52.0	320.0	25.4	160.0	20.3	135.0
	1	83.9	485.0	74.5	485.0	37.2	215.0	29.8	175.0
75 Std	2	60.5	320.0	52.0	320.0	25.4	160.0	20.3	135.0
	2	83.9	485.0	74.5	485.0	37.2	215.0	29.8	175.0
75 Hi Cap & Hi Eff	2	60.5	320.0	52.0	320.0	25.4	160.0	20.3	135.0
	2	83.9	485.0	74.5	485.0	37.2	215.0	29.8	175.0
90 Std & Hi Cap	4	N/A	N/A	N/A	N/A	37.2	215.0	29.8	175.0
105 Hi Cap	2	N/A	N/A	N/A	N/A	37.2	215.0	29.8	175.0
	2	N/A	N/A	N/A	N/A	45.0	260.0	36.0	210.0
115 Std	2	N/A	N/A	N/A	N/A	37.2	215.0	29.8	175.0
	2	N/A	N/A	N/A	N/A	45.0	260.0	36.0	210.0
130 Std	4	N/A	N/A	N/A	N/A	45.0	260.0	36.0	210.0

*Variable speed compressor

*Variable speed compressor

Table 26. Electrical service sizing data, motors, 20 to130 tons

Nominal Tons	Nominal Voltage 200 FLA	230 FLA	460 FLA	575 FLA
	Air-Cooled Condenser Fan Motor			
20	8.2	8.2	3.6	2.8
25	12.3	12.3	5.4	4.2
30	12.3	12.3	5.4	4.2
40	16.4	16.4	7.2	5.6
50, 55	24.6	24.6	10.8	8.4
60	24.6	24.6	10.8	8.4
70	24.6	24.6	10.8	8.4
75	24.6	24.6	10.8	8.4
90	N/A	N/A	14.4	11.2
105	N/A	N/A	18.0	14.0
115	N/A	N/A	18.0	14.0
130	N/A	N/A	21.6	16.8
Motor Horsepower	**Supply[a]/Exhaust/Return Fan Motor[b] (4 pole)**			
3	11.0	8.6	4.3	3.8
5	15.3	13.2	6.6	5.4
7.5	22.2	18.8	9.4	7.8
10	29.5	25.2	12.6	10.1
15	40.7	35.4	17.7	15.1
20	56.1	49.4	24.7	19.6
25	70.5	62.0	31.0	24.5
30	85.5	73.2	36.6	29.2
40[c]	N/A	N/A	49.0	39.0
50[c]	N/A	N/A	60.5	48.0
Motor Horsepower	**Supply Fan Motor (6 pole)(a)[d]**			
3	10.1	8.8	4.4	3.7
5	17.0	14.8	7.4	5.8
7.5	25.0	22.0	11.0	8.6
10	32.0	28.6	14.3	11.5
15	46.0	41.0	20.5	16.0
20	63.0	54.0	27.0	NA

(a) FLA is for individual motors by HP, not total unit supply fan HP.
(b) Return fan motors are available in 3-20 Hp.
(c) 40 and 50 Hp motor available as standard in 460 & 575 volt only.
(d) DDP fans selected under 1,700 RPM will have 6-pole motors.

Table 27. Electrical service sizing data, electric heat module (electric heat units only), 20 to130 tons

Module kW	Voltage 200 FLA	230 FLA	460 FLA	575 FLA
30	83.3	72.2	36.1	28.9
50	138.8	120.3	60.1	48.1
70	194.3	168.4	84.2	67.4
90	249.8	216.5	108.3	86.6
110	305.3	264.6	132.3	105.9
130			156.4	125.1
150			180.4	144.3
170			204.5	163.6
190			228.5	182.8

Note: Electric heat FLA are determined at 208, 240, 480 and 600 volts.

Table 28. Electrical service sizing data evaporative condenser, all tonnages (24 to 89 tons)

Condenser Fan			Sump Pump			Sump Heater	
Qty	HP	FLA	Qty	HP	FLA	kW	FLA
1	5.4	5.9	1	0.5	1.55	3	3.8

Table 29. Electrical service sizing data, control power transformer, heating and cooling modes, 20 to130 tons

Nominal Tons (Air-cooled/ Evaporative condensing)	Digit 2 Unit Function	Voltage 200	230	460	575
20,25,30/24,29,36	A,E,L,S,X	1	1	1	1
20,25,30/24,29,36	F	4	3	2	1
40,50,55,60/ 48,59,73	A,E,L,S,X	3	2	1	1
40,50,55,60/ 48,59,73	F	5	4	2	2
70,75/80,89	A,E,L,S,X	5	4	2	2
70,75/80,89	F	8	7	3	3
90,105,115,130	E,L,S,X	5	4	2	2
90,105,115,130	F	8	7	3	3

Table 30. Electrical service sizing data, crankcase heaters (heating mode on 460/575 volt only), 20 to 30 tons

Nominal Tons (Air-cooled/ Evaporative condensing)	(Add) FLA
20-30/24-36	1
40-60/48-73	2
70-75/80-89	3
90-105	3
115-130	4

Table 31. Voltage utilization range

Unit Voltage	Voltage Utilization Range
200/60/3	180-220
230/60/3	207-253
380/50/3	342-418
415/50/3	373-457
460/60/3	414-506
575/60/3	517-633

Power Wire Sizing and Protection Device Equations

To correctly size the main power wiring for the unit, use the appropriate calculation(s) listed below. Read the load definitions that follow.

Use Calculation #1 for determining:

- MCA (Minimum Circuit Ampacity)
- MOP (Maximum Over current Protection)
- RDE (Recommended Dual Element fuse size)
  - SAH_ (Cooling Only) units
  - SXH_ (Extended Casing) units
  - SLH_ and SSH_ (Cooling with Wet Heat) units
  - SFH_ (Cooling with Gas Heat) units

Use Calculation #2 for SEH_ (Cooling with electric Heat) units.

Load Definitions	
LOAD 1	Current of the largest motor (compressor or fan motor)
LOAD 2	Sum of the currents of all remaining motors
LOAD 3	Current of electric heaters
LOAD 4	Any other load rated at 1 amp or more

Control Power Transformer for All Modes	
20–40 ton units	Add 3 FL Amps
50–75 ton units	Add 6 FL Amps
90–130 ton units	Add 8 FL Amps

Crankcase Heaters for Heating Mode 460/575v Only	
20–30 ton units	Add 1 Amp
40–60 ton units	Add 2 Amps
70–75 ton units	Add 3 Amps
90–130 ton unit	Add 4 Amps

- Calculation #1: SAH_, SXH_, SLH_, SSH_, and SFH_ units

  MCA = (1.25 x LOAD 1) + LOAD 2 + LOAD 4

  MOP = (2.25 x LOAD 1) + LOAD 2 + LOAD 4

  Select a fuse rating equal to the MOP value. If the MOP value does not equal a standard fuse size as listed in NEC 240 - 6, select the next lower standard fuse rating.

  Note: If the selected MOP is less than the MCA, select the lowest standard maximum fuse size that is equal to or larger than the MCA, provided the selected fuse size does not exceed 800 amps.

  RDE = (1.5 x LOAD1) + LOAD2 + LOAD4

  Select a fuse rating equal to the RDE value. If the RDE value does not equal a standard fuse size as listed in NEC 240 - 6, select the next higher standard fuse rating.

  Note: If the selected RDE is greater than the selected MOP value, select the RDE value to equal the MOP value.

- Calculation #2: Rooftop units with electric heat (SEH_ 20 to 130 tons)
  - Single source power (380V, 415V, 460V, and 575V)

  To arrive at the correct MCA, MOP, and RDE values for these units, you must perform two sets of calculations. First calculate the MCA, MOP, and RDE values as if the unit was operating in the cooling mode (use the equations given in Calculation #1 above). Then calculate the MCA, MOP, and RDE values as if the unit was operating in the heating mode as follows. (Keep in mind when determining LOADS that the compressors do not operate while the unit is in the heating mode).

  For units using heaters less than 50 Kw: MCA = 1.25 x (LOAD 1 + LOAD 2 + LOAD 4) + (1.25 x LOAD 3)

  For units using heaters equal to or greater than 50 Kw: MCA = 1.25 x (LOAD 1 + LOAD 2 + LOAD 4) + LOAD 3

  The nameplate MCA value will be the larger of the cooling mode MCA value or the heating mode MCA value calculated above.

  MOP = (2.25 x LOAD 1) + LOAD 2 + LOAD 3 + LOAD 4

  The selected MOP value will be the larger of the cooling mode MOP value or the heating mode MOP value calculated above.

  Select a fuse rating equal to the MOP value. If the MOP value does not equal a standard fuse size as listed in NEC 240 - 6, select the next lower standard fuse rating.

  Note: If the selected MOP is less than the MCA, select the lowest standard maximum fuse size that is equal to or larger than the MCA, provided the selected fuse size does not exceed 800 amps.

  RDE = (1.5 x LOAD 1) + LOAD 2 + LOAD 3 + LOAD 4

  The selected RDE value will be the larger of the cooling mode RDE value or the heating mode RDE value calculated above.

  Select a fuse rating equal to the RDE value. If the RDE value does not equal a standard fuse size as listed in NEC 240 - 6, select the next higher standard fuse rating.

  Note: If the selected RDE is greater than the selected MOP value, select the RDE value to equal the MOP value.

- Dual source power units (200V and 230V)

These units will have two circuit values shown on the nameplate. The first circuit value will be the refrigeration (cooling mode) values calculated using calculation #1 above. The second set of circuit values shown on the nameplate will be for the electric heating circuit as follows.

MCA = (1.25 x LOAD 3)
MOP = (1.25 x LOAD 3)

Select a fuse rating for the electric heating circuit that's equal to the MOP value obtained in the equation above. If the MOP value does not equal a standard fuse size as listed in NEC 240 - 6, select the next lower standard fuse rating (see note below for exception).

Note: If the selected MOP is less than the MCA obtained in the equation above, select the lowest standard maximum fuse size that is equal to or larger than the MCA, provided the selected fuse size does not exceed 800 amps.

RDE = LOAD 3

Select a fuse rating for the electric heating circuit that's equal to the RDE value. If the RDE value does not equal a standard fuse size as listed in NEC 240 - 6, select the next higher standard fuse rating.

Note: If the selected RDE is greater than the selected MOP value, select the RDE value to equal the MOP value.

Disconnect Switch Sizing (DSS)

- Calculation #1: SX, SF, SA, SL, or SS single power source units

  DSS = 1.15 X (LOAD 1 + LOAD 2 + LOAD 4)

- Calculation #2: All SEH_ single power source units

  DSS = 1.15 X (LOAD 3 + Supply Fan FLA + Exhaust Fan FLA)

  PLUS

  DSS = 1.15 X (LOAD 1 + LOAD 2 + LOAD 4)

  Use the larger value of the two calculations to size the electrical service.

- Calculation #3: SEHL (200/230 Volt) 20 to 75 ton dual power source units

  DSS = 1.15 X LOAD3 for the electric heater AND Calculation #1 for the refrigeration components

Field-installed Control Wiring

⚠WARNING

Hazardous Voltage!

Disconnect all electric power, including remote disconnects before servicing. Follow proper lockout/tagout procedures to ensure the power can not be inadvertently energized. Failure to disconnect power before servicing could result in death or serious injury.

⚠WARNING

Proper Field Wiring and Grounding Required!

All field wiring MUST be performed by qualified personnel. Improperly installed and grounded field wiring poses FIRE and ELECTROCUTION hazards. To avoid these hazards, you MUST follow requirements for field wiring installation and grounding as described in NEC and your local/state electrical codes. Failure to follow code could result in death or serious injury.

The Rooftop Module (RTM) must have a mode input in order to operate the rooftop unit. The flexibility of having several system modes depends upon the type of sensor and/or remote panel selected to interface with the RTM. An overall layout of the various control options available for a Constant Volume application, with the required number of conductors for each device, is illustrated in Figure 44, p. 59. Figure 47, p. 71 illustrates the various control options with the required number of conductors for a Variable Air Volume application.

Note: All field wiring must conform to NEC guidelines as well as state and local codes.

The various field-installed control panels, sensors, switches, and contacts discussed in this section require both AC and DC consideration. These diagrams are representative of standard applications and are provided for general reference only. Always refer to the wiring diagram that shipped with the unit for specific electrical schematic and connection information.

Controls Using 24 VAC

Before installing any connecting wiring, do the following:

- Refer to Figure 14, p. 30 and Figure 17, p. 33 for electrical access locations provided on the unit.
- Refer to Table 32 for AC conductor sizing guidelines.
- Use copper conductors unless otherwise specified.
- Ensure that the AC control wiring between the controls and the unit's termination point does not exceed 3 ohms/conductor for the length of the run.

  Note: Resistance in excess of 3 ohms per conductor may cause component failure due to insufficient AC voltage supply.

- Check all loads and conductors for grounds, shorts, and mis-wiring.

Table 32. AC conductors

Distance from unit to control	Recommended wire size
000-460 feet	18 gauge
461-732 feet	16 gauge
733-1000 feet	14 gauge

- Do not run the AC low voltage wiring in the same conduit with the high voltage power wiring.

Controls using DC Analog Input/ Outputs

Before installing any connecting wiring between the unit and components that use a DC analog input/output signal, do the following:

- Refer to the appropriate illustration in Figure 14, p. 30 and Figure 17, p. 33 for electrical access locations provided on the unit.
- Refer to Table 33 for conductor sizing guidelines.
- Use standard copper conductor thermostat wire unless otherwise specified.
- Ensure that the wiring between the controls and the unit's termination point does not exceed 2.5 ohms/ conductor for the length of the run.

  Note: Resistance in excess of 2.5 ohms per conductor can cause deviations in the accuracy of the controls.

Table 33. DC conductors

Distance from unit to control	Recommended wire size
000-150 feet	22 gauge
151-240 feet	20 gauge
241-385 feet	18 gauge
386-610 feet	16 gauge
611-970 feet	14 gauge

- Do not run the electrical wires transporting DC signals in or around conduit housing high voltage wires.

Ensure the following for units equipped with a Trane® Communication Interface (TCI), BACnet™ communication interface (BCI), or LonTalk communication interface (LCI) option, which uses a serial communication link:

- Must be 18 AWG shielded twisted pair cable (Belden 8760 or equivalent).
- Must not exceed 5,000 feet maximum for each link.
- Must not pass between buildings.

Constant Volume System Controls

Remote Panel without NSB (BAYSENS110*)

This electronic sensor features four system switch settings (Heat, Cool, Auto, and Off) and two fan settings (On and Auto) with four system status LEDs. It is a manual or automatic changeover control with dual setpoint capability. It can be used with a remote zone sensor BAYSENS077*. Refer to Table 34, p. 68 for the Temperature vs. Resistance coefficient.

Zone Temperature Control Zone Panel (5U68) (BAYSENS108*)

This electronic sensor features four system switch settings (Heat, Cool, Auto, and Off) and two fan settings (On and Auto). It is a manual or automatic changeover control with dual setpoint capability.

Variable Air Volume and Constant Volume System Controls

Remote Panel without NSB (5U59) (BAYSENS021*)

The remote panel without Night setback has a system switch as well as a S/A temperature setpoint indicator, a local sensor, and four LEDs. These features allow the operator to control system operation and monitor unit operating status from a remote location. Use the installation instructions that shipped with the panel to install it and the unit's field wiring diagram to connect it to the unit.

Discharge Temperature Control Changeover Contacts (5K87)

These contacts are connected to the RTM when daytime heating on Discharge Temperature Control units with internal or external hydronic heat is required. Daytime (occupied) heating switches the system to a Zone Temperature Control type mode of operation. Refer to the unit wiring diagram for the field connection terminals in the unit control panel. The switch must be rated at 12 ma @ 24 VDC minimum.

Remote Human Interface Module (5U66)

The remote human interface module enables the operator to set or modify the operating parameters of the unit using its 16-key keypad and view the operating status of the unit on the 2 line, 40 character LCD screen without leaving the building. However, the Remote Human Interface module cannot be used to perform any service functions.

One remote panel is designed to monitor and control up to four units providing each of the units are equipped with an

IPCB module. Use the installation instructions that shipped with the module to install it, and the appropriate illustrations in Figure 44, p. 59 or Figure 51, p. 75 to connect it to the unit.

Remote Zone Sensor (BAYSENS073*)

This electronic analog sensor features remote zone sensing and timed override with override cancellation. It is used when the RTM has been programmed as the source for zone temperature control. Refer to Table 34, p. 68 for the temperature vs. resistance coefficient.

Remote Zone Sensor (BAYSENS074*)

This electronic analog sensor features single setpoint capability and timed override with override cancellation. It is used with a Trane Integrated Comfort™ system. Refer to Table 34 for the temperature vs. resistance coefficient.

Remote Zone Sensor (5RT16, 5U57, 5U69) (BAYSENS016*)

This bullet type analog temperature sensor can be used for outside air (ambient) sensing, return air temperature sensing, supply air temperature sensing, remote temperature sensing (uncovered), morning warm-up temperature sensing, and for supply air temperature reset. Wiring procedures vary according to the particular application and equipment involved. When this sensor is wired to a BAYSENS119* remote panel, wiring must be 18 AWG shielded twisted pair (Belden 8760 or equivalent). Refer to Table 34 for the temperature vs. resistance coefficient.

Remote Zone Sensor (5RT16, 5U57, 5U69) (BAYSENS077*)

This electronic analog sensor can be used with BAYSENS119* or 021A remote panels. When this sensor is wired to a BAYSENS119* remote panel, wiring must be 18 AWG shielded twisted pair (Belden 8760 or equivalent). Refer to the specific remote panel for wiring details.

Remote Panel with NSB (BAYSENS119*)

This 7-day programmable sensor features four periods for occupied\unoccupied programming per day. If power is interrupted, the program is retained in permanent memory. If power is off longer than 2 hours, only the clock and day may have to be reset.

The six programming keys located on the front panel allows selection of four system modes (Heat, Cool, Auto, and Off), two fan modes (On and Auto). It has dual temperature selection with programmable start time capability.

The occupied cooling setpoint ranges between 40°and 80° Fahrenheit. The warm-up setpoint ranges between 50° and 90° Fahrenheit with a 2 degrees deadband. The unoccupied cooling setpoint ranges between 45 and 98 degrees Fahrenheit. The heating setpoint ranges between 43 and 96 degrees Fahrenheit. Two liquid crystal displays (LCD) display zone temperature, temperature setpoints, week day, time, and operational mode symbols.

The sensor can be programmed to enable or disable applicable functions, e.g., morning warm-up, economizer minimum CFM override during unoccupied status, Fahrenheit or centigrade, supply air tempering, remote zone temperature sensor, 12/24 hour time display, smart fan, and computed recovery.

During an occupied period, an auxiliary relay rated for 1.25 amps @ 30 volts AC with one set of single pole double throw contacts is activated. See Table 34 for the temperature vs. resistance coefficient.

Remote Minimum Position Potentiometer (5U70) (BAYSTAT023*)

The remote minimum position potentiometer is used on units with an economizer. It allows the operator to remotely set the economizer's minimum position (which controls the amount of outside air entering the unit). Use installation instructions that shipped with the potentiometer to install and the appropriate illustrations in Figure 44, p. 59 or Figure 51, p. 75 to connect it to the unit.

External Auto/Stop Switch (5S67)

A field-supplied single pole single throw switch (5S67) can be used to shut down the unit operation. This switch is a binary input wired to the RTM. When opened, the unit shuts down immediately and can be canceled by closing the switch. Refer to the appropriate illustrations in Figure 44, p. 59 or Figure 51, p. 75 for the proper connection terminals in the unit control panel. The switch must be rated for 12 ma @ 24 VDC minimum.

VOM Contacts (5K90, 5K91, 5K92, 5K93, 5K94)

If the unit is equipped with a Ventilation Override Module (VOM), the building owner or contractor can specify a number of special functions. These functions can include, but are not limited to, the following:

- Unit Off
- Pressurization
- Exhaust/Return
- Purge
- Purge with Duct Pressure Control

These functions are controlled by binary inputs wired to the VOM. They can be initiated by a toggle switch, a time clock, or an ICSTM output. The switch must be rated for 12 ma @ 24 VDC minimum.

The customer can modify the following preset sequences:

- VOM Mode "A" Priority 1—Unit Off:
  - Supply fan—OFF
  - VFD—0% (if equipped)

- Exhaust/Return fan—OFF, Exhaust/Return dampers Closed
- O/A dampers—Closed
- Heat—All stages OFF, Modulating Heat output at 0 VDC
- Occupied/Unoccupied output—De-energized (Occupied)
- VO Relay—Energized
- Pre-heater State—Off (if equipped)

- VOM Mode "B" Priority 2—Pressurize:
  - Supply fan—ON
  - VFD—100% (if equipped)
  - Exhaust/Return fan—OFF, Exhaust/Return dampers—Closed
  - O/A dampers—Open
  - Heat—All stages OFF, Modulating Heat output at 0 VDC
  - Occupied/Unoccupied output—Energized (Unoccupied)
  - VO Relay—Energized
  - Pre-heater State—Off (if equipped)
- VOM Mode "C" Priority 3—Exhaust/Return:
  - Supply fan—OFF
  - VFD—0% (if equipped)
  - Exhaust/Return fan—ON, Exhaust/Return dampers—Open
  - O/A dampers—Closed
  - Heat—All stages OFF, Modulating Heat output at 0 VDC
  - Occupied/Unoccupied output—De-energized (Occupied)
  - VO Relay—Energized
  - Pre-heater State—Off (if equipped)
- VOM Mode "D" Priority 4—Purge:
  - Supply fan—ON
  - VFD—100% (if equipped)
  - Exhaust/Return fan—ON, Exhaust/Return dampers—Open
  - O/A dampers—Open
  - Heat—All stages OFF, Modulating Heat output at 0 VDC
  - Occupied/Unoccupied output—Energized (Unoccupied)
  - VO Relay—Energized
  - Pre-heater State—Off (if equipped)
- VOM Mode "E" Priority 5—Purge with duct pressure control:
  - Supply fan—ON
  - VFD—(if equipped) Controlled by S/A Pressure Control with supply air pressure high limit disabled.
  - Exhaust/Return fan—ON, Exhaust/Return dampers—Open
  - O/A dampers—Open
  - Heat—All stages OFF, Modulating Heat output at 0 VDC
  - Occupied/Unoccupied output—Energized (Unoccupied)
  - VO Relay—Energized
  - Pre-heater State—Off (if equipped)

OFF appears in the Ventilation Override screen after all VOM binary inputs have been reset (opened).

Due to codes in some areas, the definitions for some or all of the VOM modes may have to be locked into the program by the user. Once the definitions are locked, the Ventilation Override Module must be replaced in order to reprogram that sequence.

Refer to Figure 44, p. 59 or Figure 51, p. 75 for the proper connection terminals in the unit control panel for each of the VOM initiating device's and the appropriate Programming, Troubleshooting Guide (PTG latest edition) for programming instructions.

Emergency Override Definitions (with LCI-I/BCI-I module installed)

When an LCI-I/BCI-I module is installed, the user can initiate one of five Emergency Override sequences, which have the following predefined unit operation:

PRESSURIZE

- Supply Fan—On
- Exhaust/Return Fan—Off (if equipped)
- Exhaust/Return Dampers—Closed (if equipped)
- OA Dampers—Open
- Heat—All heat stages Off (staged gas and elec.), Hydronic
- Heat & Mod Gas Heat output at 0%.
- Occupied/Unoccupied output—Energized
- VO Relay—Energized (with VOM module installed)
- OA Preheater State—Off (with VCM module installed)

DEPRESSURIZE

- Supply Fan—Off
- Exhaust/Return Fan—On (if equipped)
- Exhaust/Return Dampers -Open (if equipped)
- OA Dampers—Closed
- Heat—All heat stages Off (staged gas and elec.), Hydronic

- Heat & Mod Gas Heat output at 0%.
- Occupied/Unoccupied output—De-energized
- VO Relay—Energized (with VOM module installed)
- OA Preheater State—Off (with VCM module installed)

PURGE

- Supply Fan—On
- Exhaust/Return Fan—On (if equipped)
- Exhaust/Return Dampers—Open (if equipped)
- OA Dampers—Open
- Heat—All heat stages Off (staged gas and elec.), Hydronic
- Heat & Mod Gas Heat output at 0%.
- Occupied/Unoccupied output—Energized
- VO Relay—Energized (with VOM module installed)
- OA Preheater State—Off (with VCM module installed)

SHUTDOWN

- Supply Fan—Off
- Exhaust/Return Fan—Off (if equipped)
- Exhaust/Return Dampers—Closed (if equipped)
- OA Dampers—Closed
- Heat—All heat stages Off (staged gas and elec.), Hydronic
- Heat & Mod Gas Heat output at 0%.
- Occupied/Unoccupied output—De-energized
- VO Relay—Energized (with VOM module installed)
- OA Preheater State—Off (with VCM module installed)

FIRE

- Supply Fan—Off
- Exhaust/Return Fan—Off (if equipped)
- Exhaust/Return Dampers—Closed (if equipped)
- OA Dampers—Closed
- Heat—All heat stages Off (staged gas and elec.), Hydronic
- Heat & Mod Gas Heat output at 0%.
- Occupied/Unoccupied output—De-energized
- VO Relay—Energized (with VOM module installed)
- OA Preheater State—Off (with VCM module installed)

The UCM network relies on various sensors located throughout the system to provide temperature information in the form of an analog input. All of the sensors used have the same temperature vs. resistance co-efficient and are made from Keystone Carbon D97 material with a 1 degree Centigrade tolerance.

Table 34. Temperature vs. resistance coefficient

Temp. (°F)	Resistance (in. 1000 Ohms)	Temp. (°F)	Resistance x 1000 Ohms
-40	346.1	71	11.60
-30	241.7	72	11.31
-20	170.1	73	11.03
-10	121.4	74	10.76
-5	103	75	10.50
0	87.56	76	10.25
5	74.65	77	10.00
10	63.8	78	9.76
15	54.66	79	9.53
20	46.94	80	9.30
25	40.4	85	8.25
30	34.85	90	7.33
35	30.18	100	5.82
40	26.22	105	5.21
45	22.85	110	4.66
50	19.96	120	3.76
55	17.47	130	3.05
60	15.33	140	2.50
65	13.49	150	2.05
66	13.15	160	1.69
67	12.82	170	1.40
68	12.5	180	1.17
69	12.19	190	0.98
70	11.89	200	0.83

Emergency Stop Switch (5S71)

A normally closed (N.C.) switch (5S71) wired to the RTM may be used during emergency situations to shut down all unit operations. When opened, an immediate shutdown occurs. An emergency stop diagnostic is entered into the Human Interface and the unit must be manually reset. Refer to the appropriate illustrations in Figure 44, p. 59 or Figure 51, p. 75 for the proper connection terminals in the unit control panel. The switch must be rated for 12 ma @ 24 VDC minimum.

Occupied/Unoccupied Contacts (5K86)

To provide Night Setback control if a remote panel with NSB (5U58) was not ordered, a field-supplied contact (5K86) must be installed. This binary input provides the Occupied/Unoccupied status information of the building to the RTM. It can be initiated by a time clock, or a Building Automation System control output. The relay's contacts must be rated for 12 ma @ 24 VDC minimum. Refer to the appropriate illustrations in Figure 44, p. 59 or Figure 51, p. 75 for the proper connection terminals in the unit control panel.

Demand Limit Relay (5K89)

If the unit is equipped with a Generic BAS Module (1U51), (i.e., unit model number digit 28 is a “B,” “K,” or “R”), a normally open (N.O.) switch can be used to limit the electrical power usage during peak periods. When demand limit is initiated, the mechanical cooling and heating operation is limited to 50% or 100% (20-30 ton) or 25%, 50%, 75%, or 100% (40-130 ton). Demand limit can be initiated by a dry contact closure or BAS input. These contacts must be rated for 12 ma @ 24 VDC minimum.

Outside Air Sensor (3RT3) (BAYSENS016*)

This device senses the outdoor air temperature and sends this information in the form of an analog input to the RTM. It is factory installed on units with an economizer, but can be field-provided/installed and used for informational purposes on units without an economizer. Refer to the appropriate illustrations in Figure 44, p. 59 or Figure 51, p. 75 for the proper connection terminals in the unit control panel. Refer to Table 34, p. 68 for temperature vs. resistance coefficient.

Generic Building Automation System (1U51)

The Generic Building Automation System (GBAS) module allows a non-Trane building control system to communicate with the rooftop unit and accepts external setpoints in form of analog inputs for cooling, heating, demand limiting, and supply air pressure parameters.

Generic Building Automation System Module (GBAS 0-5 VDC)—Provided for those cases where non-Tracer building management system is used. The GBAS module provides a binary input for Demand Limiting, four (4) analog inputs for setpoint adjustment and five (5) relay outputs for diagnostic reporting. Inputs can use a potentiometer or 0-5 VDC signal.

Generic Building Automation System Module (GBAS 0-10 VDC)—Used to provide broad control capabilities for building automation systems other than Trane’s Tracer system. The GBAS module provides a binary input for Demand Limiting, four (4) analog inputs for setpoint adjustment and four (4) analog outputs as well as one (1) relay output for diagnostic reporting. Inputs can use a potentiometer or 0-10 VDC signal.

Refer to Figure 51 for the input wiring to the GBAS module and the various desired setpoints with the corresponding DC voltage inputs for both VAV and CV applications.

For complete application details of the module, refer to Engineering Bulletin UN-PRB001-EN.

Wall or Duct Mount Humidity Sensor (5U108) (BAYSENS036* or BAYSENS037*)

This field-installed humidity sensor is mounted in the space or in the return air duct, sending an analog input to the RTM 1TB16-10 and 1TB16-11. It must be ordered/ installed for dehumidification control with modulating hot gas reheat, but can also be used for humidification applications.

Note: If the unit has Comparative Enthalpy installed and enabled, the ECEM Return Humidity input can be used for dehumidification/ humidification instead of the RTM humidity input.

Figure 47. Typical ventilation override binary output wiring diagram for 20 to 89 ton CV control options. Refer to wiring notes on Figure 48.

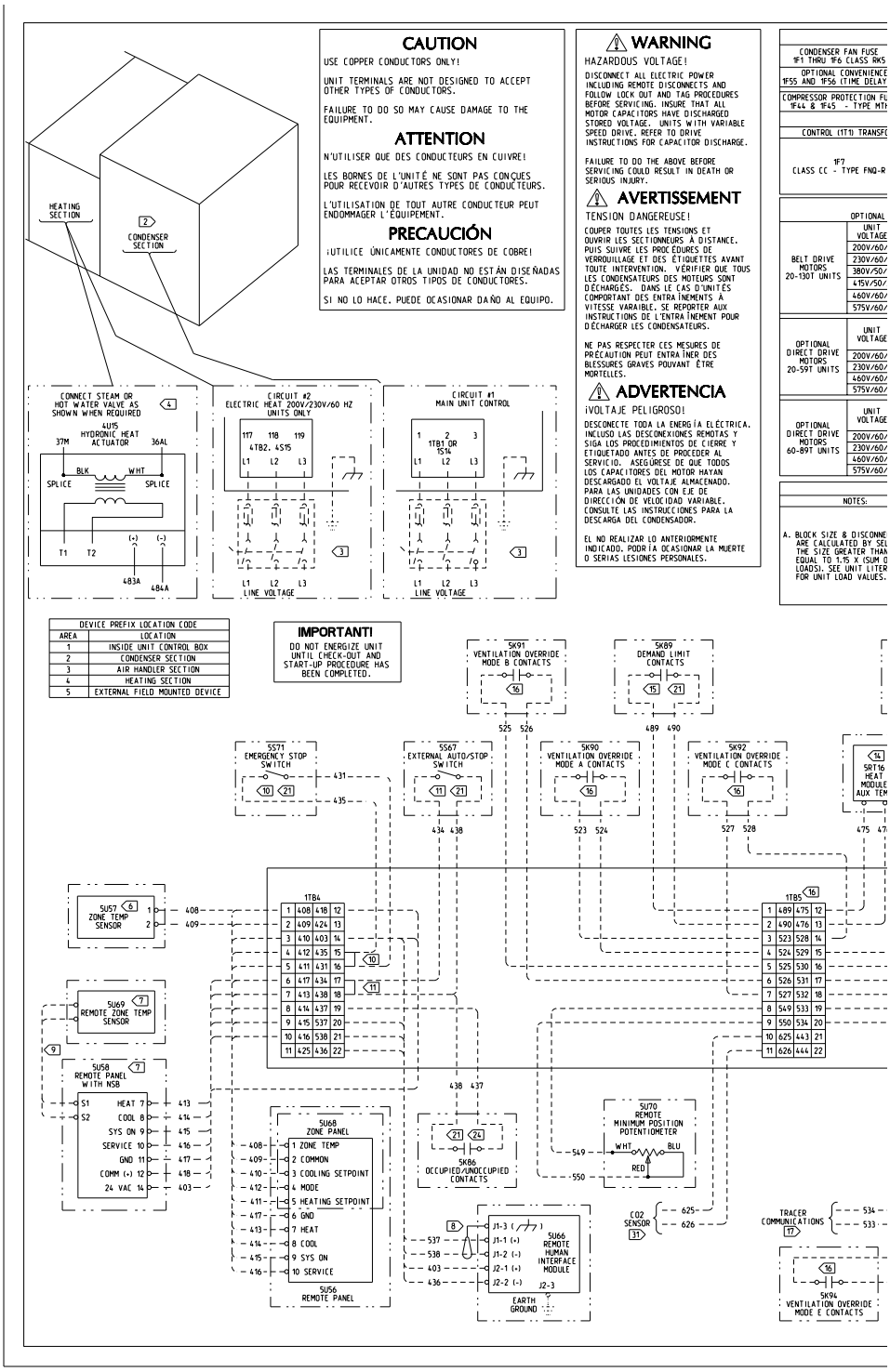

Figure 47. (continued from previous page) Typical ventilation override binary output wiring diagram for 20 to 89 ton CV control options. Refer to wiring notes on Figure 48.

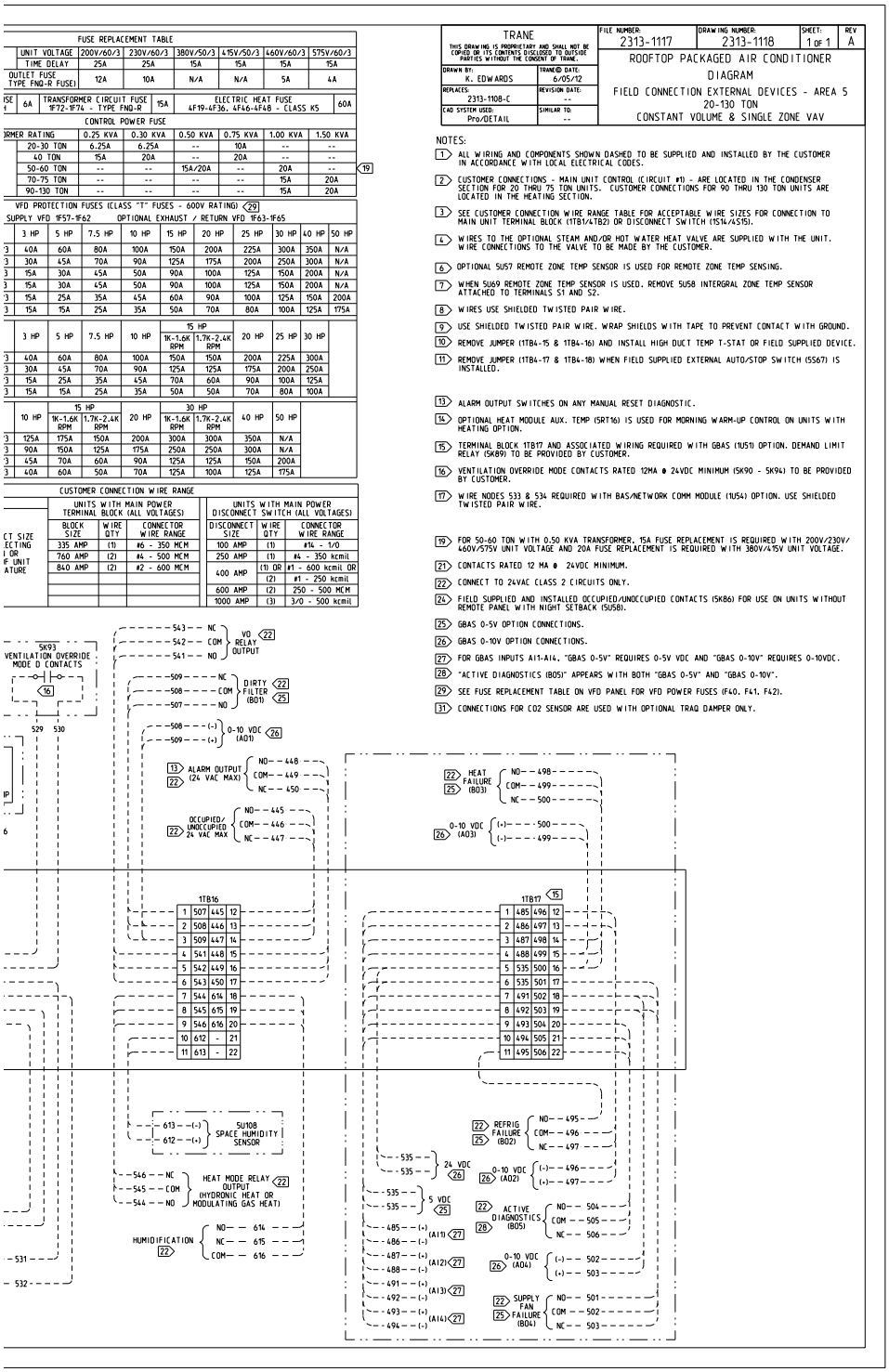

Figure 48. Field connection diagram notes for 20 to 89 ton CV or VAV applications

NOTES:

1. ALL WIRING AND COMPONENTS SHOWN DASHED TO BE SUPPLIED AND INSTALLED BY THE CUSTOMER IN ACCORDANCE WITH LOCAL ELECTRICAL CODES.
2. CUSTOMER CONNECTIONS - MAIN UNIT CONTROL (CIRCUIT #1) - ARE LOCATED IN THE CONDENSER SECTION FOR 20 THRU 75 TON UNITS. CUSTOMER CONNECTIONS FOR 90 THRU 130 TON UNITS ARE LOCATED IN THE HEATING SECTION.
3. SEE CUSTOMER CONNECTION WIRE RANGE TABLE FOR ACCEPTABLE WIRE SIZES FOR CONNECTION TO MAIN UNIT TERMINAL BLOCK (1TB1/4TB2) OR DISCONNECT SWITCH (1S14/4S15).
4. WIRES TO THE OPTIONAL STEAM AND/OR HOT WATER HEAT VALVE ARE SUPPLIED WITH THE UNIT. WIRE CONNECTIONS TO THE VALVE TO BE MADE BY THE CUSTOMER.
6. OPTIONAL 5U57 REMOTE ZONE TEMP SENSOR IS USED FOR REMOTE ZONE TEMP SENSING.
7. WHEN 5U69 REMOTE ZONE TEMP SENSOR IS USED, REMOVE 5U58 INTERGRAL ZONE TEMP SENSOR ATTACHED TO TERMINALS S1 AND S2.
8. WIRES USE SHIELDED TWISTED PAIR WIRE.
9. USE SHIELDED TWISTED PAIR WIRE. WRAP SHIELDS WITH TAPE TO PREVENT CONTACT WITH GROUND.
10. REMOVE JUMPER (1TB4-15 & 1TB4-16) AND INSTALL HIGH DUCT TEMP T-STAT OR FIELD SUPPLIED DEVICE.
11. REMOVE JUMPER (1TB4-17 & 1TB4-18) WHEN FIELD SUPPLIED EXTERNAL AUTO/STOP SWITCH (5S67) IS INSTALLED.
13. ALARM OUTPUT SWITCHES ON ANY MANUAL RESET DIAGNOSTIC.
14. OPTIONAL HEAT MODULE AUX. TEMP (5RT16) IS USED FOR MORNING WARM-UP CONTROL ON UNITS WITH HEATING OPTION.
15. TERMINAL BLOCK 1TB17 AND ASSOCIATED WIRING REQUIRED WITH GBAS (1U51) OPTION. DEMAND LIMIT RELAY (5K89) TO BE PROVIDED BY CUSTOMER.
16. VENTILATION OVERRIDE MODE CONTACTS RATED 12MA @ 24VDC MINIMUM (5K90 - 5K94) TO BE PROVIDED BY CUSTOMER.
17. WIRE NODES 533 & 534 REQUIRED WITH BAS/NETWORK COMM MODULE (1U54) OPTION. USE SHIELDED TWISTED PAIR WIRE.
19. FOR 50-60 TON WITH 0.50 KVA TRANSFORMER, 15A FUSE REPLACEMENT IS REQUIRED WITH 200V/230V/460V/575V UNIT VOLTAGE AND 20A FUSE REPLACEMENT IS REQUIRED WITH 380V/415V UNIT VOLTAGE.
21. CONTACTS RATED 12 MA @ 24VDC MINIMUM.
22. CONNECT TO 24VAC CLASS 2 CIRCUITS ONLY.
24. FIELD SUPPLIED AND INSTALLED OCCUPIED/UNOCCUPIED CONTACTS (5K86) FOR USE ON UNITS WITHOUT REMOTE PANEL WITH NIGHT SETBACK (5U58).
25. GBAS 0-5V OPTION CONNECTIONS.
26. GBAS 0-10V OPTION CONNECTIONS.
27. FOR GBAS INPUTS AI1-AI4, "GBAS 0-5V" REQUIRES 0-5V VDC AND "GBAS 0-10V" REQUIRES 0-10VDC.
28. "ACTIVE DIAGNOSTICS (BO5)" APPEARS WITH BOTH "GBAS 0-5V" AND "GBAS 0-10V".
29. SEE FUSE REPLACEMENT TABLE ON VFD PANEL FOR VFD POWER FUSES (F40, F41, F42).
31. CONNECTIONS FOR CO2 SENSOR ARE USED WITH OPTIONAL TRAQ DAMPER ONLY.

Figure 49. Typical field wiring diagram for 20 to 89 ton VAV control option

DEVICE PREFIX LOCATION CODE	
AREA	LOCATION
1	INSIDE UNIT CONTROL BOX
2	CONDENSER SECTION
3	AIR HANDLER SECTION
4	HEATING SECTION
5	EXTERNAL FIELD MOUNTED DEVICE

IMPORTANT!

DO NOT ENERGIZE UNIT UNTIL CHECK-OUT AND START-UP PROCEDURE HAS BEEN COMPLETED.

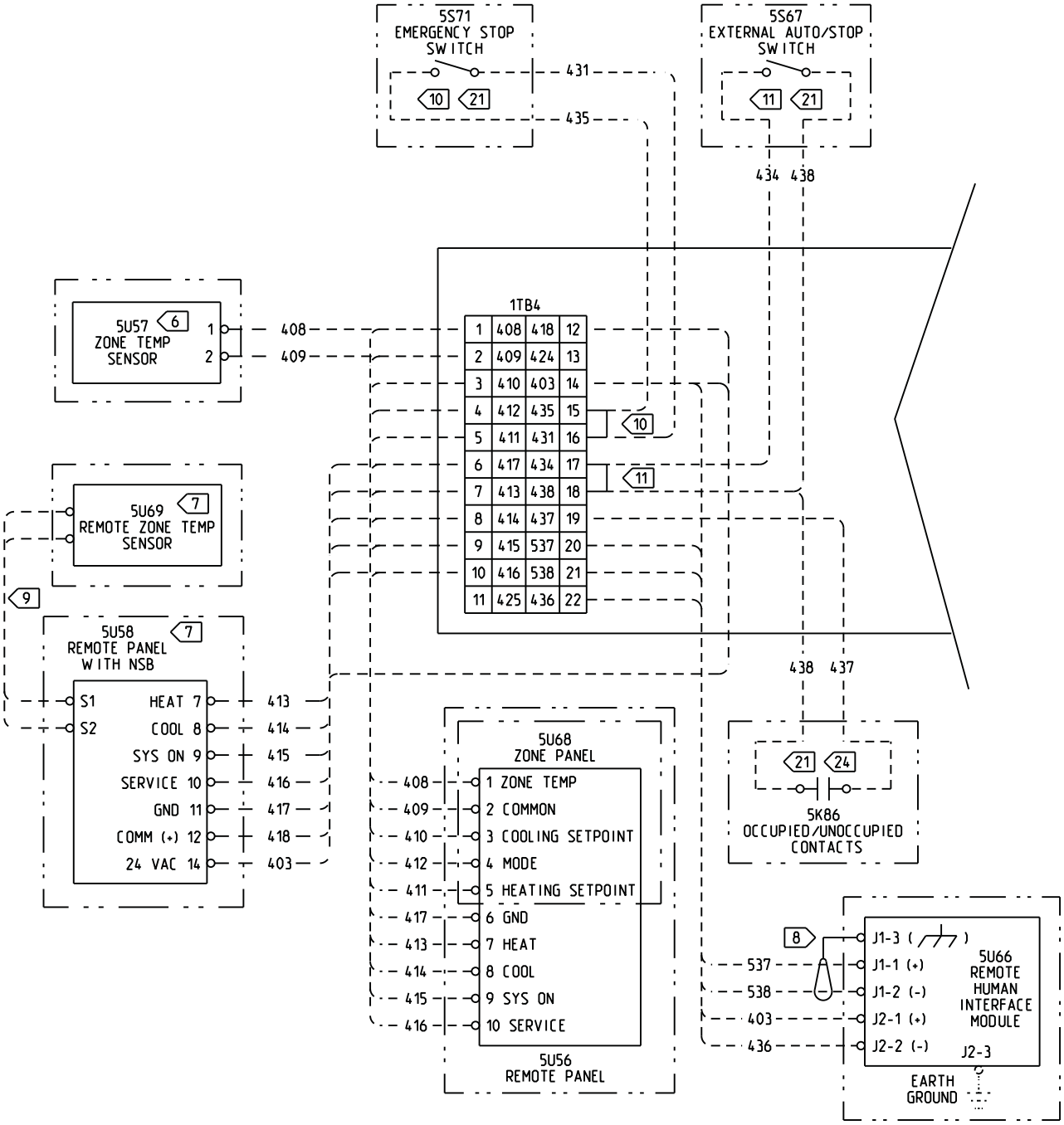

Figure 50. Typical field wiring diagram for 20 to 89 ton VAV control option

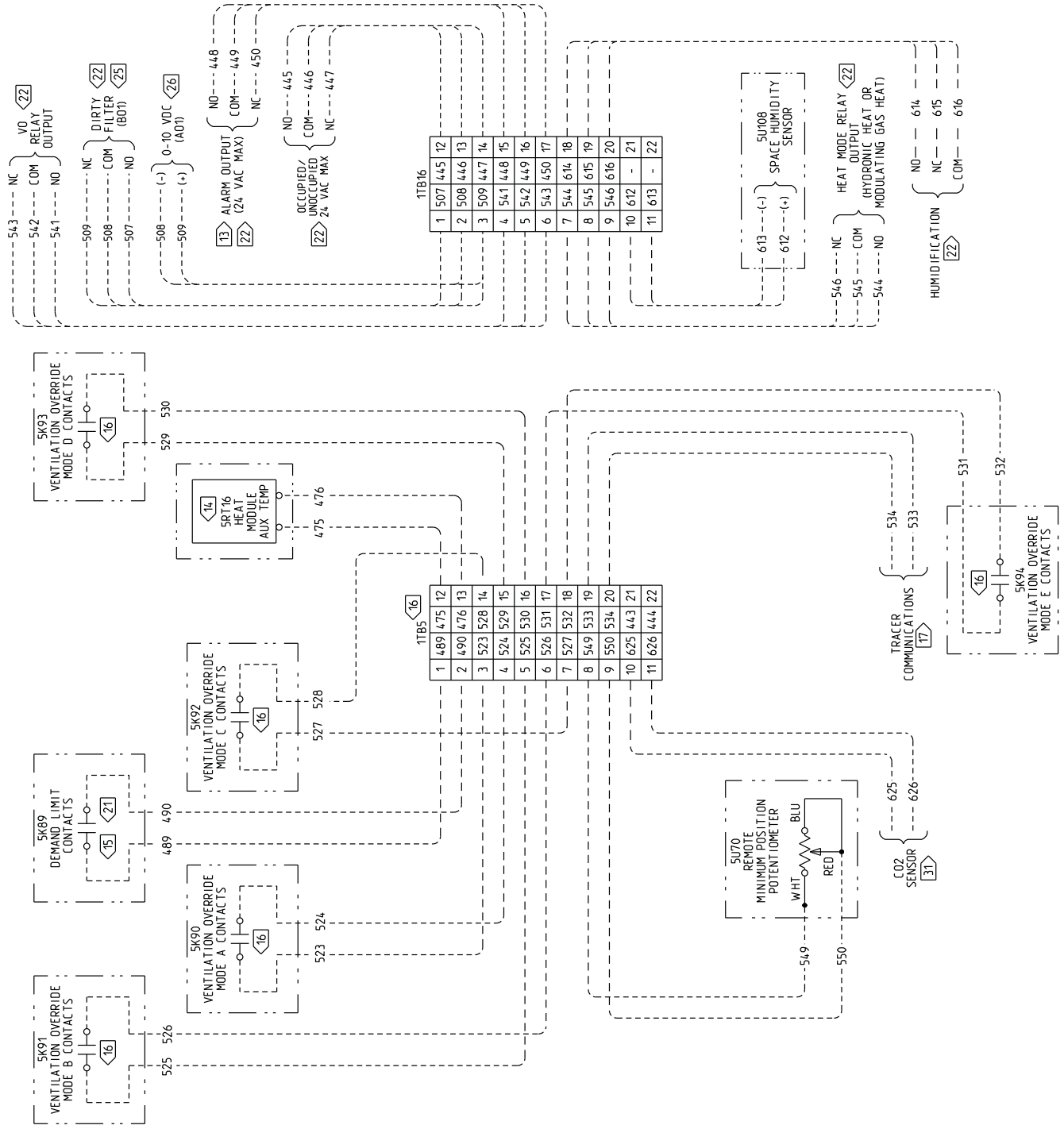

Figure 51. Typical GBAS analog input wiring diagram for 20 to 89 ton CV and VAV control options

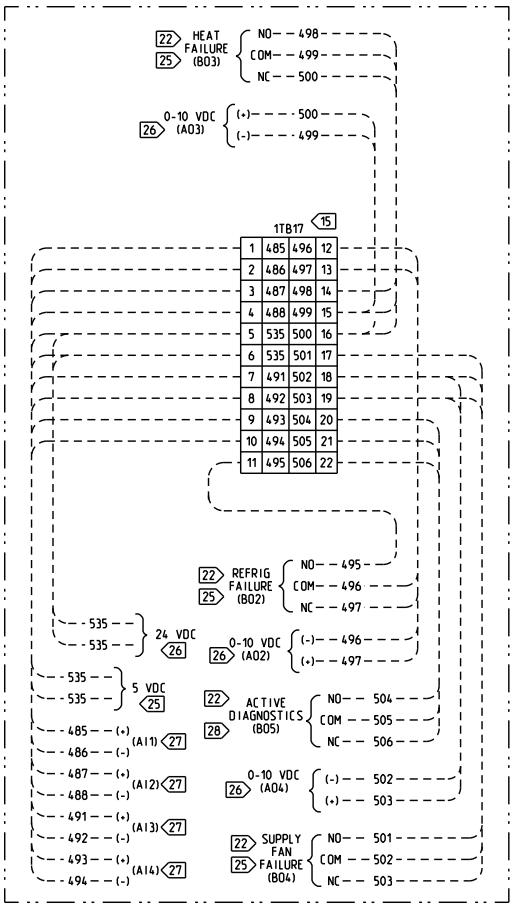

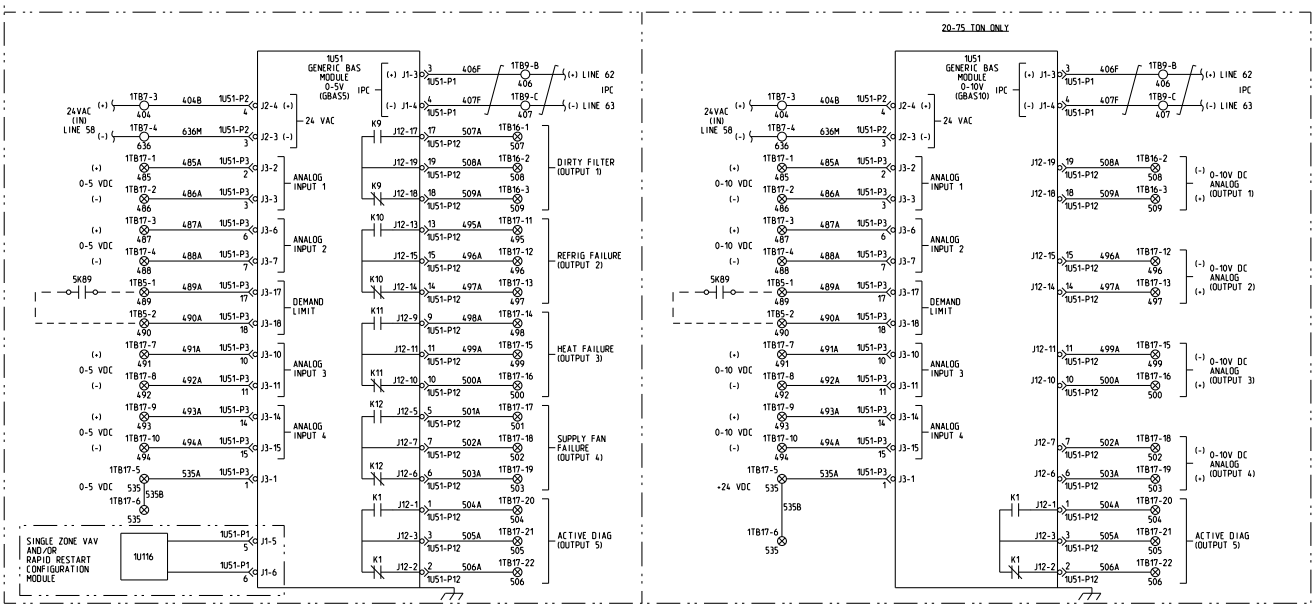

Table 35. GBAS voltage vs. setpoint

Setpoint	GBAS 0-5 VDC	GBAS 0-10 VDC	Valid Range
Occ Zone Cooling Setpoint(CV only)	0.5 to 4.5 VDC	0.5 to 9.5 VDC	50 to 90°F
Unocc Zone Cooling Setpoint	0.5 to 4.5 VDC	0.5 to 9.5 VDC	50 to 90°F
Occ Zone Heating Setpoint(CV only)	0.5 to 4.5 VDC	0.5 to 9.5 VDC	50 to 90°F
Unocc Zone Heating Setpoint	0.5 to 4.5 VDC	0.5 to 9.5 VDC	50 to 90°F
SA Cooling Setpoint (VAV only)	0.5 to 4.5 VDC	0.5 to 9.5 VDC	40 to 90°F
SA Cooling Setpoint (SZVAV only)	0.5 to 4.5 VDC	0.5 to 9.5 VDC	40 to 70°F
Zone Cooling Setpoint (SZVAV only)	0.5 to 4.5 VDC	0.5 to 9.5 VDC	50 to 80°F
Zone/Return Critical Temperature Setpoint (RR only)	0.5 to 4.5 VDC	0.5 to 9.5 VDC	75 to 95°F
SA Heating Setpoint (VAV only)	0.5 to 4.5 VDC	0.5 to 9.5 VDC	40 to 180°F
SA Heating Setpoint (SZVAV only)	0.5 to 4.5 VDC	0.5 to 9.5 VDC	65 to 95°F
Space Static Pressure Setpoint	0.5 to 4.5 VDC	0.5 to 9.5 VDC	-0.20 to 0.30 IWC
SA Static Pressure Setpoint	0.5 to 4.5 VDC	0.5 to 9.5 VDC	0.7 to 5.1 IWC
Min OA Flow Setpoint 1	0.5 to 4.5 VDC	0.5 to 9.5 VDC	0 to Unit Max Flow
MWU Setpoint	0.5 to 4.5 VDC	0.5 to 9.5 VDC	50 to 90°F
Econ Dry Bulb Enable Setpoint	0.5 to 4.5 VDC	0.5 to 9.5 VDC	50 to 140°F
SA_Reheat_Setpoint	0.5 to 4.5 VDC	0.5 to 9.5 VDC	60 to 90°F
Minimum Position Setpoint 3	0.5 to 4.5 VDC	0.5 to 9.5 VDC	0 to 100%
Occ Dehumidification Setpoint	0.5 to 4.5 VDC	0.5 to 9.5 VDC	40 to 65%
Unocc Dehumidification Setpoint	0.5 to 4.5 VDC	0.5 to 9.5 VDC	40 to 65%
Occ Humidification Setpoint	0.5 to 4.5 VDC	0.5 to 9.5 VDC	20 to 50%
Unocc Humidification Setpoint	0.5 to 4.5 VDC	0.5 to 9.5 VDC	20 to 50%

Notes:
1. If DCV is enabled this is used for Design Minimum OA Flow Setpoint
2. If DCV is enabled, this is used for Design Minimum OA Damper Position Setpoint

Table 36. GBAS 0-10 VDC output range

Setpoint	GBAS 0-10 VDC	Valid Range
Outdoor Air Temperature	0.5 to 9.5 VDC	-40 to 200°F
Zone Temperature	0.5 to 9.5 VDC	-40 to 200°F
Supply Air Temperature (VAV and CV Discharge Temperature Control only)	0.5 to 9.5 VDC	-40 to 200°F
Supply Air Pressure (VAV only)	0.5 to 9.5 VDC	0.0 to 7.91 wc
Space Pressure	0.5 to 9.5 VDC	-0.67-0.67 wc
Space RH	0.5 to 9.5 VDC	0-100%
OA RH	0.5 to 9.5 VDC	0-100%
Space CO_2 Level	0.5 to 9.5 VDC	50-2000 PPM
Cooling Capacity %	0.5 to 9.5 VDC	0-100%
Heating Capacity %	0.5 to 9.5 VDC	0-100%
Outdoor Air Damper Position	0.5 to 9.5 VDC	0-100%
Outdoor Airflow	0.5 to 9.5 VDC	0 to 65,000 CFM

Unit Replacement

This section covers the removal and preparation that is necessary to set the R-410A replacement unit in place.

⚠WARNING

R-410A Refrigerant under Higher Pressure than R-22!

The unit described in this manual uses R-410A refrigerant which operates at higher pressures than R-22 refrigerant. Use ONLY R-410A rated service equipment or components with this unit. For specific handling concerns with R-410A, please contact your local Trane representative.

Failure to use R-410A rated service equipment or components could result in equipment or components exploding under R-410A high pressures which could result in death, serious injury, or equipment damage.

⚠WARNING

Fiberglass Wool

Product contains fiberglass wool. Disturbing the insulation in this product during installation, maintenance or repair will expose you to airborne particles of glass wool fibers and ceramic fibers known to the state of California to cause cancer through inhalation. Glass wool fibers may also cause respiratory, skin or eye irritation.

Precautionary Measures

- Avoid breathing fiberglass dust.
- Use a NIOSH approved dust/mist respirator.
- Avoid contact with the skin or eyes. Wear long-sleeved, loose-fitting clothing, gloves, and eye protection.
- Wash clothes separately from other clothing; rinse washer thoroughly.
- Operations such as sawing, blowing, tear-out, and spraying may generate fiber concentrations requiring additional respiratory protection. Use the appropriate NIOSH approved respiration in these situations.

First Aid Measures

- **Eye contact—Flush eyes with water to remove dust. If symptoms persist, seek medical attention.**
- **Skin contact—Wash affected areas gently with soap and warm water after handling.**

Electrical Connection

⚠WARNING

Live Electrical Components!

During installation, testing, servicing and troubleshooting of this product, it may be necessary to work with live electrical components. Have a qualified licensed electrician or other individual who has been properly trained in handling live electrical components perform these tasks. Failure to follow all electrical safety precautions when exposed to live electrical components could result in death or serious injury.

Main Electrical Power

Lock and tag out unit main electric power and remove power supply wiring from installed disconnect/terminal block of unit. See Figure 44, p. 59 for locations.

Note: Inspect wiring to ensure that all field-installed wiring complies with NEC and applicable local codes.

SEHF Units w/200V or 230V Electric Heat *(requires separate power supply to heater)*

Lock and tag out unit main electric power and remove power supply wiring for the electric heat from a dedicated, field-supplied/installed disconnect to terminal block 4TB2, or to an optional unit-mounted disconnect switch 4S15. See Figure 44, p. 59 for locations.

Field-installed Control Wiring

Note: Inspect wiring to ensure that all field-installed wiring complies with NEC and applicable local codes.

Remove the field wiring connections for the variable air volume controls as applicable.

Note: Label wiring to save time when reconnecting wiring is necessary.

Remove ground wire from the unit.

Note: The electrical connection for 40, 60, 70 and 75 ton is 32 inches further down the unit than older style units. On full perimeter curbs, this also means the incoming electrical will be outside the curb area. The electrician should be informed of both points.

See Figure 44, p. 59 for typical field wiring for 20-75 ton units.

See Figure 45, p. 60 for typical field power wiring for 90-130 ton units.

Requirements for Gas Heat

1. Remove and isolate gas supply from the unit gas train
2. Ensure gas supply line piping joints are properly sealed
3. Remove drip leg Installed in the gas piping near the unit
4. Remove factory-supplied flue assembly installed on the unit
5. Remove the 3/4" CPVC furnace drain stub out that was used for condensate drain

⚠WARNING

Hazardous Gases and Flammable Vapors!

Exposure to hazardous gases from fuel substances have been shown to cause cancer, birth defects or other reproductive harm. Improper installation, adjustment, alteration, service or use of this product could cause flammable mixtures. To avoid hazardous gases and flammable vapors follow proper installation and set up of this product and all warnings as provided in this manual. Failure to follow all instructions could result in death or serious injury.

When using dry nitrogen cylinders for pressurizing units for leak testing, always provide a pressure regulator on the cylinder to prevent excessively high unit pressures. Never pressurize unit above the maximum recommended unit test pressure as specified in applicable unit literature. Failure to properly regulate pressure could result in a violent explosion, which could result in death or serious injury or equipment or property-only-damage. See maximum recommended unit test pressure below.)

Requirements for Hot Water Heat (SLH*)

1. Remove and isolate water piping that comes into the heating section from the base of the unit
2. Remove the installed, 3-way modulating valve, if necessary, to remove unit
3. Remove the valve actuator wiring.

Requirements for Steam Heat (SSH*)

1. Remove and isolate steam piping that comes into the heating section from the base of the unit
2. Remove, 2-way modulating valve if necessary
3. Remove the valve actuator wiring

Space Pressure Sensor and Tubing Installation (All units with Statitrac)

1. Remove field-supplied pneumatic tubing connected to the space pressure transducer located in the filter section, see Figure 52, p. 78

Figure 52. Duct static pressure control layout

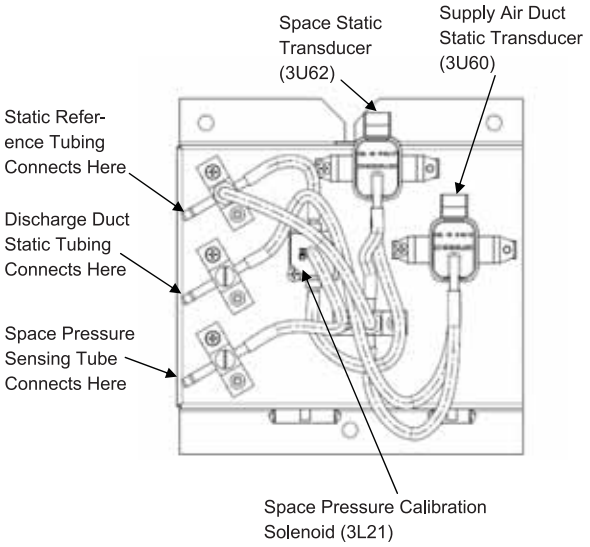

Condensate Drain Connections

Each S*HF or K unit is provided with two 1" evaporator condensate drain connections (one on each side of the unit).

Remove all 1" condensate drain connections from unit, see Figure 53, p. 79.

Figure 53. Condensate drain locations

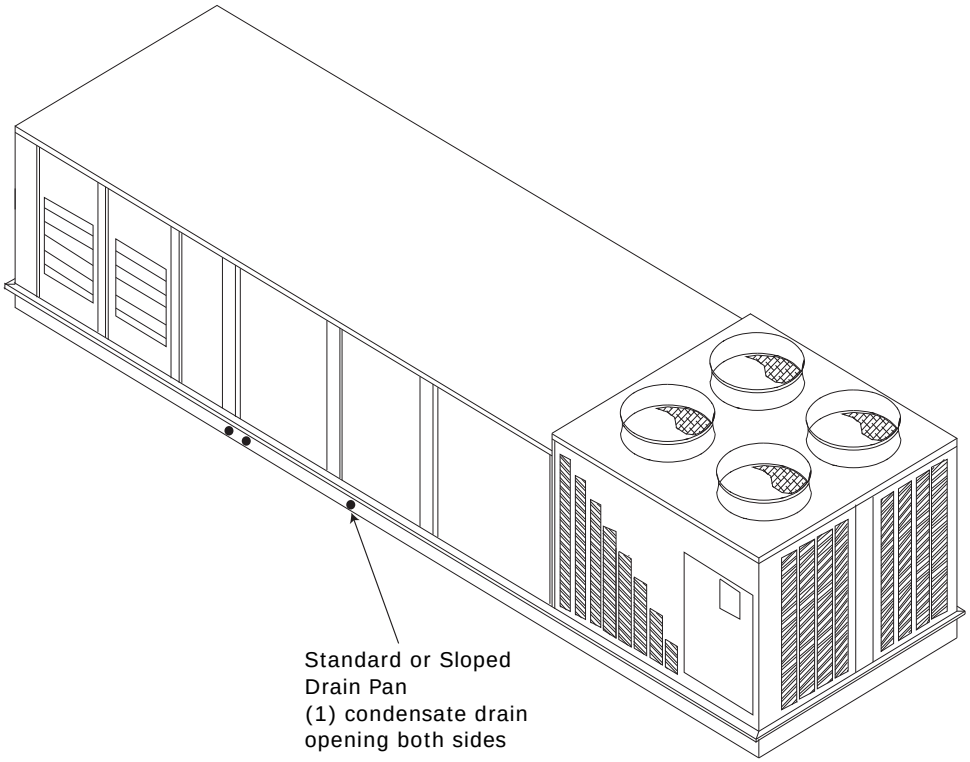

Supply and Return Duct Connections

Ensure supply and return duct connections were installed to the roof curb supply and return areas of roof curb, rather than to the unit itself.

Remove supply and return duct work if it was directly connected to the unit.

Lifting procedures

Unit Rigging and Placement

⚠WARNING

Heavy Objects!

Do not use cables (chains or slings) except as shown. Each of the cables (chains or slings) used to lift the unit must be capable of supporting the entire weight of the unit. Lifting cables (chains or slings) may not be of the same length. Adjust as necessary for even unit lift. Other lifting arrangements may cause equipment or property-only damage. Failure to properly lift unit may result in death or serious injury. See details below.

Note: Use spreader bars as shown in Figure 26, p. 43 Refer to the unit Installation, Operation and Maintenance manual or unit nameplate for the weight. Refer to the installation instructions located inside the side control panel for further rigging information.

A center-of-gravity illustration is shown in Figure 22, p. 38; dimensional data is shown in Table 15, p. 38.

Attach adequate strength lifting slings to all four lifting lugs on 20 to 75 ton units and to all six lifting lugs on 90 to130 ton units. The minimum distance between the lifting hook and the top of the unit should be 7 feet for 20 to 75 ton units, and 12 feet for 90 to130 ton units. Figure 25, p. 42 illustrates the installation of spreader bars to protect the unit and to facilitate a uniform lift. Table 16, p. 39 lists the typical unit operating weights. Table 38, p. 80 and Table 39, p. 80 list weights for previous development sequences of IntelliPak.

1. Test lift the unit to ensure it is properly rigged and balanced, make any necessary rigging adjustments.
2. Lift the unit. These units have a continuous base rail around the air handler section which allows for placement on dunnage or a tractor trailer for transport.
3. Remove old gasket from the roof curb and place new gasket material on curb, see Figure 54, p. 80.

Note: See Figure 55, Table 40, p. 81 and Table 41, p. 81 as well Figure 56, Table 42, p. 82, to determine gasket material length using roof curb dimensions.

A cross section of the juncture between the unit and the roof curb is shown in Figure 26, p. 43

Installation of S*HL or K units

See unit IOM and appropriate programming guide for installation operation and programming requirements.

Table 37. Typical unit and curb weights (R-22)

Unit Size	Typical Unit Operating Weight[a]				Roof Curb Max. Weight (b)	
	SAHF	SE,SL, SSHF	SFHF	SXHF	SAHF	S*HF/ G
C20	4360	4690	4970	4580	490	510
C25	4520	4860	5130	4750	490	510
C30	5220	5590	5840	5460	490	510
C40	6890	7400	7880	7240	515	550
C50	7890	8450	8900	8290	515	550
C55	8140	8690	9170	8540	515	550
C60	9320	9650	10120	9480	610	640
C70	9860	10160	10640	10040	610	640
C75	9860	10160	10640	10040	610	640
	Typical Unit Operating Weight[c]				Roof Curb Max. Weight (b)	
Unit Size	SAHF	SE,SL, SSHF	SFHF	SXHF	SAHF	S*HF/ G
C20	4650	5000	5270	4860	490	510
C25	4830	5180	5440	5060	490	510
C30	5570	5930	6200	5800	490	510
C40	7290	7820	8280	7650	515	550
C50	8350	8900	9380	8740	515	550
C55	8600	9160	9640	9010	515	550
C60	9840	10150	10620	10010	610	640
C70	10370	10690	11160	10560	610	640
C75	10370	10690	11160	10560	610	640

(a) Weights represent the typical unit operating weights for the heating/cooling function indicated with an economizer and exhaust fan installed.
(b) Roof curb weights include the curb and pedestal.
(c) Weights represent the typical unit operating weights for the heating/cooling function indicated with an economizer, exhaust fan with supply and exhaust VFD installed.

Table 38. Approximate roof curb and S*HC unit operating weights (units built prior to 1991)

Unit Size	Typical Unit Operating Weight			Roof Curb Max Weight	
	SAHC	SE,SL,SS ,SXHC	SB,SFHC	SAHC	S*HF
C20	4,600	4,950	5,250	445	470
C25	4,700	5,050	5,300	445	470
C30	5,500	6,050	6,200	445	470
C40	7,500	8,200	8,500	505	540
C50	8,350	9,100	9,200	530	560
C55	8,500	9,200	9,350	530	560
C60	9,600	10,300	10,400	545	575
C70	10,500	11,200	11,300	545	575
C75	10,700	11,400	11,500	545	575

Note: Weight shown in this table represents the maximum unit operating weight for S*HC units with heating/cooling functions indicated and includes economizer and exhaust fan options. Actual unit weight is on the unit nameplate.

Table 39. Approximate operating weights, 90 to 100 ton, "E" style cabinet (units built prior to 1991)

Unit Size/ Tons	Rooftop w/o Exhaust Fans	Rooftop with Exhaust Fans	Curb
SEHE C90	13,150	14,500	600
SFHE C90	13,820	15,150	600
SXHE C90	13,000	14,340	600
SEHE D11	13,700	15,050 600	600
SFHE D11	14,360	15,700	600
SXHE D11	13,550	14,880	600

Figure 54. Perimeter gasket material

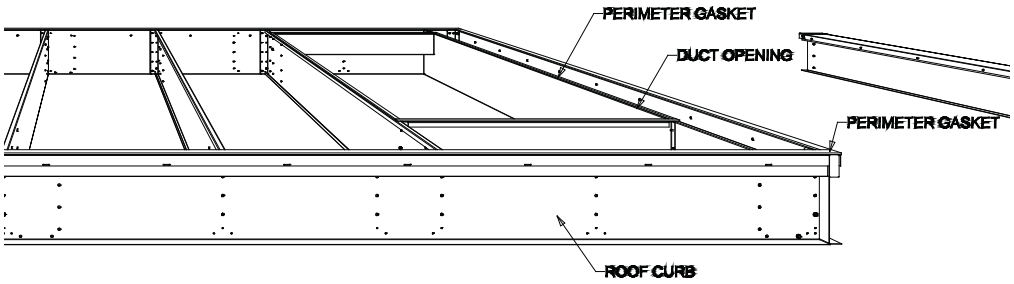

Figure 55. Typical partial perimeter curb with pedestal illustration for 20- 75 ton standard units

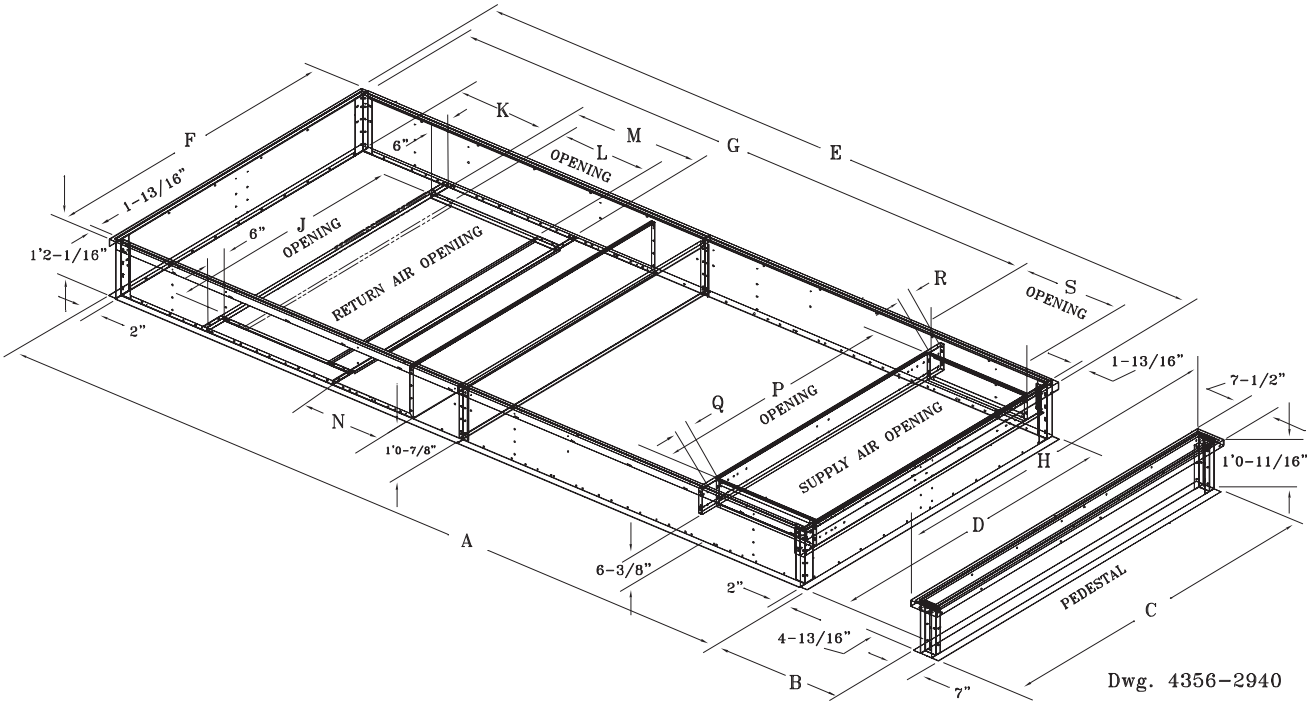

Table 40. Typical curb dimensions for 20 to 75 ton SAHF units with air-cooled condensers (R-22) (see Figure 55)

Curb Dimensions	SAHF-C20, C25, C30	SAHF-C40	SAHF-C50, C55	SAHF-C60, C70, C75
A	16' 3-7/8"	19' 1-15/16"	19' 1-15/16"	19' 1-15/16"
B	2' 10-1/16"	7' 10-1/16"	7' 10-1/16	7' 10-1/16"
C	7' 10-7/16"	7' 10-7/16"	7' 10-7/16"	9' 11-15/16"
D	7' 0-13/16"	7' 0-13/16"	7' 0-13/16"	9' 2-5/16"
E	16' 3-9/16"	19' 1-5/8"	19' 1-5/8"	19' 1-5/8"
F	7' 0-1/2"	7' 0-1/2"	7' 0-1/2"	9' 2"
G	13'6-15/16"	16' 2-9/16"	16' 2-9/16"	16' 2-9/16"
H	7' 11-15/16"	7' 11-15/16"	7' 11-15/16"	10' 1-7/16"
J	5' 8-13/16"	5' 8-13/16"	5' 8-13/16"	7' 10-5/16"
K	2' 0"	2' 0"	2' 0"	2' 0"
L	2' 5-5/16"	3' 6"	3' 6"	3' 6"
M	2' 11-5/16"	4' 0"	4' 0"	4' 0"
N	1' 10-5/8"	1' 10-5/8"	1' 10-5/8"	1' 10-5/8"
P	5' 9-1/2"	5' 9-1/2"	5' 91/2"	6' 11-7/8"
Q	0' 5-11/16"	0' 5-11/16"	0' 5-11/16"	0' 11-3/16"
R	0' 5-11/16"	0' 5-11/16"	0' 5-11/16"	0' 11-3/16"
S	2' 3-5/16"	2' 5-15/16"	2' 5-15/16"	2' 5-15/16"

Table 41. Typical curb dimensions for SEHF, SFHF, SLHF, SSHF, SXHF, 20 to 75 ton units with air-cooled condensers (R-22) (see Figure 55)

Curb Dimensions	S_HF-C20, C25, C30	S_HF-C40	S_HF-C50, C55	S_HF-C60, C70, C75
A	18' 7-1/2"	22' 4-1/2"	22'4-1/2"22'	4-1/2"
B	2' 10-1/16"	7' 10-1/16"	7' 10-1/16"	7' 10-1/16
C	7' 10-7/16"	7' 10-7/16"	7' 10-7/16"	9' 11-15/16"
D	7' 0-13/16"	7' 0-13/16"	7' 0-13/16"	9' 2-5/16"
E	18' 7-3/16"	22' 4-1/8"	22' 4-1/8"	22' 4-1/8"
F	7' 0-1/2"	7' 0-1/2"	7' 0-1/2"	9' 2"
G	15' 10-9/16"	19' 5"	19' 5"	19' 5"
H	7' 11-15/16"	7' 11-15/16"	7' 11-15/16"	10' 1-7/16"
J	5' 8-13/16"	5' 8-13/16"	5' 8-13/16"	7' 10-5/16"
K	2' 0"	2' 0"	2' 0"	2' 0"
L	2' 5-5/16"	3' 6"	3' 6"	3' 6"
M	2' 11-5/16"	4' 0"	4' 0"	4' 0"
N	1' 10-5/8"	1' 10-5/8"	1' 10-5/8"	1' 10-5/8"
P	5' 7-3/8"	5' 7-3/8"	5' 7-3/8"	7' 8-3/4"
Q	1' 0-7/16"	0' 11-3/16"	0' 11-3/16"	0' 11-3/16"
R	0' 1 "	0' 2-1/4"	0' 2-1/4"	0' 2-3/8"
S	2' 3-5/16"	2' 5-5/16"	2' 5-5/16"	2' 5-5/16"

Figure 56. Full perimeter curb with pedestal (20 to 75 ton units built prior to 1991)

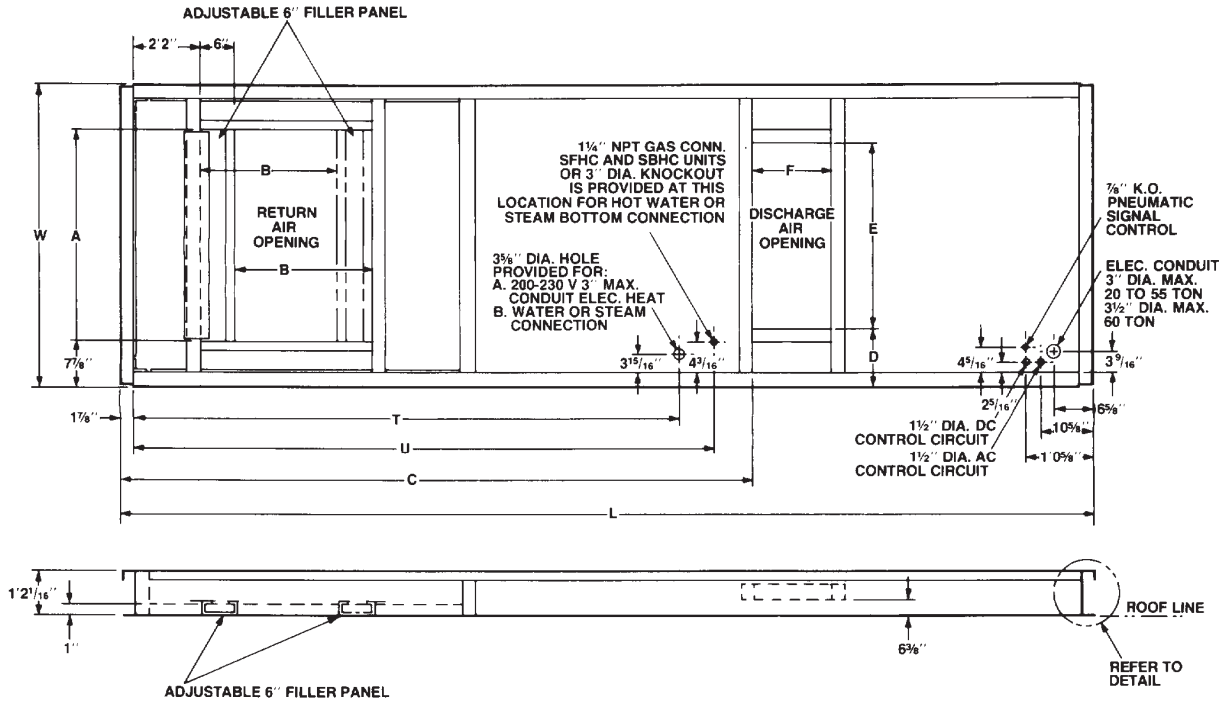

Table 42. 20 to 75 ton roof curb dimensions, downflow (units built prior to 1991)

Model	Unit Size	W	L	A	B	C	D	E	F	T	U
SAHC	20, 25, 30	7'–½"	21'–3¾"	5'–8¾"	2'–5 5/16"	13'–8 13/16"	7½"	5'–9½"	2'–3 5/16"	NA	NA
	40	7'–½"	26'–6"	5'–8¾"	3'–6"	16'–4 3/8"	7½"	5'–9½"	2'–5 15/16"	NA	NA
	50, 55	7'–½"	29'–1 15/16"	5'–8¾"	3'–6"	16'–4 5/16"	7½"	5'–9½"	2'–5 15/16"	NA	NA
	60	9'–2"	26'–6"	7'–10¼"	3'–6"	16'–4 3/8"	1'–1 1/16"	6'–11 7/8"	2'–5 15/16"	NA	NA
	75	9'–2"	26'–6"	7'–10¼"	3'–6"	16'–4 3/8"	1'–1 1/16"	6'–11 7/8"	2'–5 15/16"	NA	NA
SEHC	20, 25, 30	7'–½"	23'–7 3/8"	5'–8¾"	2'–5 5/16"	16'–0 7/16"	1'–2 5/16"	5'–7 3/8"	2'–3 5/16"	15'–7/16"	16'–4 7/8"
SFHC	40	7'–½"	29'–8½"	5'–8¾"	3'–6"	19'–6 7/8"	1'–2 5/16"	5'–7 3/8"	2'–5 15/16"	18'–6 13/16"	20'–1 7/8" 19'–8 7/8"
SLHC SSHC	50, 55	7'–½"	32'–4½"	5'–8¾"	3'–6"	19'–6 13/16"	1'–2 5/16"	5'–7 3/8"	2'–5 15/16"	18'–6 13/16"	20'–1 7/8" 19'–8 7/8"
SXHC	60	9'–2"	29'–8½"	7'–10¼"	3'–6"	19'–6 7/8"	1'–2 5/16"	7'–8 7/8"	2'–5 15/16"	18'–6 13/16"	20'–1 7/8" 19'–8 7/8"
	75	9'–2"	29'–8½"	7'–10¼"	3'–6"	19'–6 7/8"	1'–2 5/16"	7'–8 7/8"	2'–5 15/16"	18'–6 13/16"	20'–1 7/8" 19'–8 7/8"

Note: The return opening of the roof curb is provided with an adjustable filler panel 6" wide. This panel allows adjustment of the return air opening in order to clear roof members of all standard roof constructions with both supply and return openings. The return air opening of the curb is at a 90 degree angle as compared to the rooftop return air opening to allow this placement flexibility. The curb acts as a plenum between the ductwork and the unit return opening. A retainer clip is used to secure the adjustable filler piece to the roof curb.

Installation Checklist

20 to 130 Tons, Air-Cooled and Evaporative Condensing

The checklist listed below is a summary of the steps required to successfully install a commercial rooftop unit.

This checklist is intended to acquaint the installing personnel with what is required in the installation process.

Important: This checklist does not replace the detailed instructions called out in the applicable sections of this manual.

Table 43. Installation checklist

	Task Completed
General Unit Requirements	
Check the unit for shipping damage and material shortage; file a freight claim and notify Trane office.	
Verify that the installation location of the unit will provide the required clearance for proper operation.	
Assemble and install the roof curb per the current edition of the curb installation guide.	
Fabricate and install ductwork; secure ductwork to curb.	
Install pitch pocket for power supply through building roof. (If applicable)	
Rigging the unit.	
Set the unit onto the curb; check for levelness.	
Ensure unit-to-curb seal is tight and without buckles or cracks.	
Install and connect condensate drain lines to each evaporator drain connection.	
Remove the shipping hold-down bolts and shipping channels from the supply and exhaust/return fans ordered with rubber or spring isolators.	
Check all optional supply and exhaust/return fan spring isolators for proper adjustment.	
Verify all discharge and liquid line service valves (one per circuit) are back seated.	
Main Electrical Power Requirements	
Verify that the power supply complies with the unit nameplate specifications.	
Inspect all control panel components; tighten any loose connections.	
Connect properly sized and protected power supply wiring to a field-supplied/installed disconnect and unit.	
Properly ground the unit. **Note:** All field-installed wiring must comply with NEC and applicable local codes.	
Field-installed Control Wiring	
Complete the field wiring connections for the constant volume controls as applicable. Refer to “Field-installed Control Wiring” for guidelines.	
Complete the field wiring connections for the variable air volume controls as applicable. Refer to “Field-installed Control Wiring” for guidelines. **Note:** All field-installed wiring must comply with NEC and applicable local codes.	
Requirements for Electric Heat Units	
All SEHL and SEHK Units (380 minimum voltage)	
Verify that the power supply complies with the electric heater specifications on the unit and heater nameplate.	
Inspect the heater junction box and control panel; tighten any loose connections.	
Check electric heat circuits for continuity.	
SEHL Units w/200V or 230V Electric Heat: (Requires Separate Power Supply to Heater)	
Connect properly sized and protected power supply wiring for the electric heat from a dedicated, field- supplied/installed disconnect to terminal block 4TB2, or to an optional unit-mounted disconnect switch 4S15.	

Continued on next page

Table 43. Installation checklist (continued)

	Task Completed
Requirements for Gas Heat (SFH_)	
Gas supply line properly sized and connected to the unit gas train.	
All gas piping joints properly sealed.	
Drip leg Installed in the gas piping near the unit.	
Gas piping leak checked with a soap solution. If piping connections to the unit are complete, do not pressurize piping in excess of 0.50 psig or 14 inches w.c. to prevent component failure.	
Main supply gas pressure adequate.	
Flue Tubes clear of any obstructions.	
Factory-supplied flue assembly installed on the unit.	
Connect the ¾" CPVC furnace drain stubout to a proper condensate drain.	
Requirements for Hot Water Heat (SLH_)	
Route properly sized water piping through the base of the unit into the heating section.	
Install the factory-supplied, 3-way modulating valve.	
Complete the valve actuator wiring.	
Requirements for Steam Heat (SSH_)	
Install an automatic air vent at the top of the return water coil header.	
Route properly sized steam piping through the base of the unit into the heating section.	
Install the factory-supplied, 2-way modulating valve	
Complete the valve actuator wiring.	
Install ½", 15-degree swing-check vacuum breaker(s) at the top of each coil section. Vent breaker(s) to the atmosphere or merge with return main at discharge side of steam trap.	
Position the steam trap discharge at least 12" below the outlet connection on the coil.	
Use float and thermostatic traps in the system, as required by the application.	
O/A Pressure Sensor and Tubing Installation (All units with Statitrac or Return Fans)	
O/A pressure sensor mounted to the roof bracket.	
Factory supplied pneumatic tubing installed between the O/A pressure sensor and the connector on the vertical support.	
field-supplied pneumatic tubing connected to the proper fitting on the space pressure transducer located in the filter section, and the other end routed to a suitable sensing location within the controlled space (Statitrac only).	
Requirements for Modulating Reheat Dehumidification	
Install (5U108) humidity sensor in space or return duct	
Complete field wiring of humidity sensor to ECEM (1TB16). Refer to “Field Installed Control wiring” for guidelines.	
Evaporative Condenser	
Remove fan bracket	
Hook up inlet and drain piping	
Install Heat tape if needed	
Set up drain hold or drain on power loss	
Set up Mechanical Float	
Set up drain time	
Set up water quality management (third party or Trane factory-installed Dolphin Water Care™ System)	
Options setup	
Calibrate Conductivity Controller	
Set up blowdown set points on the conductivity sensor	

Unit Start Up

Cooling Sequence of Operation

Time delays are built into the controls to increase reliability and performance by protecting the compressors and maximizing unit efficiency.

NOTICE:

Compressor Failure!

Unit must be powered and crankcase heaters energized at least 8 hours BEFORE compressors are started. This will protect the compressors from premature failure.

Compressor Crankcase Heaters

Each compressor is equipped with a crankcase heater. The proper operation of the crankcase heater is important to maintain an elevated compressor oil temperature during the OFF cycle to reduce oil foaming during compressor starts.

When the compressor starts, the sudden reduction in crankcase pressure causes the liquid refrigerant to boil rapidly causing the oil to foam. This condition could damage compressor bearings due to reduced lubrication and could cause compressor mechanical failures.

NOTICE:

Compressor Failure!

When power has been OFF for an extended period, allow the crankcase heater to operate a minimum of 24 hours before starting the unit.

SZVAV Cooling Sequence of Operation

Single Zone VAV units will be equipped with a VFD controlled supply fan which will be controlled via the 0-10VDC RTM VFD output and the RTM Supply Fan output. The control scales the Vdc output from the RTM linearly to control between 37%-100% of the total fan speed range.

If the RTM determines that there is a need for active cooling capacity in order to meet the calculated Temperature Setpoint (Tset), the unit will begin to stage compressors accordingly once supply fan proving has been made. Note that the compressor staging order will be based on unit configuration and compressor lead/lag status.

Once the Tset calculation has reached its bottom limit (Tset Lower Limit Setpoint) and compressors are being utilized to meet the demand, the Tset value continues to calculate below the Tset Lower Limit Setpoint and the algorithm will begin to ramp the Supply Fan Speed up toward 100%. Note that the supply fan speed will remain at the compressor stage's associated minimum value (as described below) until the Tset value is calculated below the Tset Lower Limit Setpoint.

As the cooling load in the zone decreases the zone cooling algorithm will reduce the speed of the fan down to minimum per compressor stage and control the compressor outputs accordingly. As the compressors begin to de-energize, the Supply Fan speed will fall back to the Cooling Stage's associated minimum fan speed, but not below. As the load in the zone continues to drop cooling capacity will be reduced in order to maintain the discharge air within the ± ½ Tset deadband.

Cooling Stages Minimum Fan Speed

As the unit begins to stage compressors to meet the cooling demand, the following minimum Supply Fan Speeds will be utilized for each corresponding Cooling Stage. Note that the Supply Fan Speed will be allowed to ramp up beyond 37% as determined by the active Tset calculation; the speeds below are only the minimum speeds per cooling stage. Note that when transitioning between active cooling stages, compressors may energize prior to the supply fan reaching the minimum speed for the associated step.

- 2-Stage DX Cooling—The minimum fan speed for units with 2 stages of DX Cooling will be 37% of the unit's full airflow capacity. At Stage 1 of DX Cooling the minimum Fan Speed will be 37% and at Stage 2 of DX Cooling the Fan Speed will be at a minimum of 67%.
- 3-Stage DX cooling variable speed compressor units (40-70T)—The minimum fan speed for variable speed compressor units with 3 stages of compressor operation will be 37% of the units total airflow. Minimum fan speed will increase from 37% to 67% as nominal unit capacity increases from minimum to 75%. Minimum fan speed will be 67% at nominal unit capacities above 75%.
- 4-Stage DX Cooling—The minimum fan speed for units with 4 stages of DX Cooling will be 37% of the unit's total airflow. At Stage 1 the minimum Supply Fan Speed will be 37%, at Stage 2 the minimum Supply Fan Speed will be 58%, and at Stages 3 & 4 the minimum Supply Fan Speed will be 67%.

Rapid Restart

This feature will occur after every power cycle. Once power is restored (e.g., via a backup generator), the RTM will maximize cooling capacity within 3-5 minutes. Once the space has returned to its Zone Temperature Setpoint, the RTM controls the load using normal capacity control algorithms. The supply fan will be turned on immediately after a power cycle, module initialization, or after the Unit Start Delay has timed out. The supply fan proving switch input must be closed prior to continuing with Rapid Restart.

Once the supply fan proving switch input has closed, the unit will consider the outside air temperature to determine whether economizing or DX mechanical cooling will be utilized to provide the necessary cooling. If the outside air

temperature is less than 50°F and economizing is enabled, the outside air damper will be utilized. If the outside air temperature is above 50°F, the outside air damper will remain closed and DX mechanical cooling will occur for the duration of Rapid Restart.

Supply Fan Operation – Speed Control:

- VAV: The supply fan speed will ramp to 50%, then release to normal discharge static pressure control, limited only by the high duct static limit functionality.
- CV: The supply fan speed will turn on full airflow.
- SZVAV: The supply fan speed will ramp to full airflow.

Figure 57. Typical rapid restart timeline

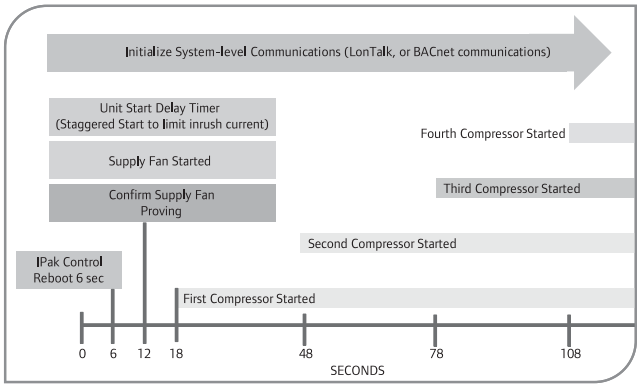

Units without an Economizer

Upon entering an "occupied" mode of operation, the RTM receives input from the remote panel to start the supply fan. For constant volume applications, the RTM supply fan contacts K2 close which energizes the supply fan contactor 1K16. When the supply fan starts, the fan proving switch (3S68) closes, signaling the RTM that airflow has been established. The VFD will begin to ramp the fan, (if equipped).

When a cooling request is sent to the RTM from a zone temperature sensor, the RTM evaluates the operating condition of the system using the supply air temperature input and the outdoor temperature input before sending the request to the SCM/MCM. Once the request is sent to the SCM/MCM, the compressor module checks the compressor protection circuit before closing "Stage 1" (K10 on SCM or K11 on MCM). After the first functional stage has started, the compressor module monitors the saturated refrigerant temperature and closes the condenser fan output contact "1A", when the saturated refrigerant temperature rises above the "lower limit" setpoint.

Units with an Economizer

Upon entering an "occupied" mode of operation, the RTM receives input from the remote panel to start the supply fan. For constant volume applications, the RTM supply fan contacts K2 close which energizes the supply fan contactor 1K16. When the supply fan starts, the fan proving switch (3S68) closes, signaling the RTM that airflow has been established. The RTM opens the economizer dampers to the specified "minimum position".

When a cooling request is sent to the RTM from the zone temperature sensor, the RTM evaluates the operating condition of the system using the supply air temperature input and the outdoor temperature input before sending the request to the SCM/MCM for mechanical cooling. If the outdoor conditions are suitable for cooling (temperature and humidity are within specified setpoints), the RTM will attempt to maintain the zone temperature without using any compressors. If the zone temperature can not be maintained within the setpoint deadband, the RTM sends a cooling request to the SCM/MCM. The compressor module checks the compressor protection circuit before closing "Stage 1" (K10 on SCM or K11 on MCM). After the first functional stage has started, the compressor module monitors the saturated refrigerant temperature and closes the condenser fan output contact "1A", when the saturated refrigerant temperature rises above the "lower limit" setpoint.

Units with Return Fan

The return fan is started once the supply fan is verified ON by the supply fan proving function. If equipped, the variable speed return fan is modulated to control return plenum pressure to the Return Plenum Pressure Setpoint and Return Plenum Pressure Deadband.

For the first two minutes of return fan operation, the outside air damper control and if equipped, building space pressure control are disabled so that the exhaust damper remains closed. After the two minute delay, the outside air damper is released to normal ventilation requests, and exhaust damper control will either track the outside air damper or if equipped, the exhaust damper control is released to normal space pressure control.

Units with Traq Sensor

The outside air enters the unit through the TRAQ Sensor assembly and is measured by velocity pressure flow rings. The velocity pressure flow rings are connected to a pressure transducer/solenoid assembly. The solenoid is used for calibration purposes to compensate for temperature swings that could affect the transducer. The Ventilation Control Module (VCM) utilizes the velocity pressure input, the RTM outdoor air temperature input, and the minimum outside air CFM setpoint to modify the volume (CFM) of outside air entering the unit as the measured airflow deviates from setpoint.

When the optional temperature sensor is installed and the Preheat function is enabled, the sensor will monitor the combined (averaged) outside air and return air temperatures. As this mixed air temperature falls below the Preheat Actuate Temperature Setpoint, the VCM will activate the preheat binary output used to control a field-installed heater. The output will be deactivated when the temperature rises 5 above the Preheat Actuate Temperature Setpoint.

When the optional CO_2 sensor is installed and the CO_2 Reset is enabled, as the CO_2 concentration increases above the CO_2 Reset Start Value, the VCM will modify the minimum outside air CFM setpoint to increase the amount of outside air entering the unit. The setpoint will be adjusted upward until the CO_2 Maximum Reset Value is reached. The maximum effective (reset) setpoint value for outside air entering the unit is limited to the systems operating CFM. As the CO_2 concentration decreases, the effective (reset) setpoint value is adjusted downward toward the minimum outside air CFM setpoint.

Figure 58. CO_2 reset

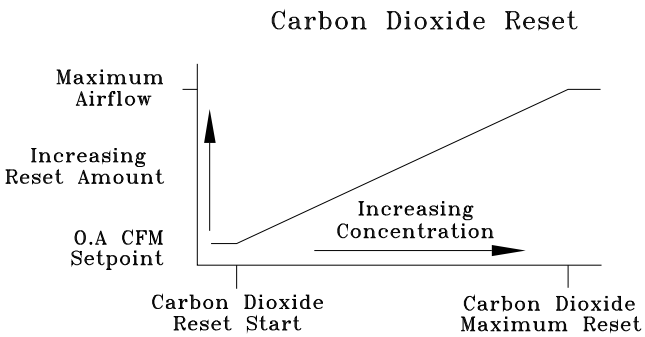

Low Charge Protection

For each refrigeration circuit, the entering and leaving evaporator temperatures are used to calculate superheat. When the calculated superheat exceeds the Evaporator Temperature Differential Setpoint minus 5°F but not the Evaporator Temperature Differential Setpoint, an information only, auto-reset, High Superheat diagnostic is initiated.

If the calculated superheat exceeds the Evaporator Temperature Differential Setpoint, a manual reset, low refrigerant charge diagnostic is initiated and all compressors on the circuit are locked out.

Note that on circuits with the Variable Speed Compressor option, the Evaporator Temperature Differential Setpoint for that circuit will be reset based on the active compressor capacity and the user selected Evaporator Temperature Differential Setpoint.

Frostat™ Control

The compressor module utilizes an evaporator temperature sensor (3RT14 & 15), mounted on the suction line of each circuit, to protect the evaporator from freezing. If the evaporator temperature approaches the specified setpoint, adjustable between 25°F and 35°F, the compressor(s) will be cycled OFF.

The compressors will not be allowed to restart until the evaporator temperature has risen 10°F above the specified cutout temperature and the compressor(s) have been off for a minimum of three minutes.

Note that on circuits with the Variable Speed Compressor option, the Active Coil Frost Cutout Temperature Setpoint for that circuit will be 5F higher than the user selected Coil Frost Cutout Temperature Setpoint.

Lead-Lag Operation

With Lead Lag operation each time the system cycles after having stages 1 and 2 ON, “Stage 2” (K11 on SCM or K3 on MCM) and the corresponding condenser fan output “2A” will start first.

The compressor module cycles the compressors ON and OFF to keep the zone temperature within the cooling setpoint deadband. The condenser fans are cycled ON and OFF to maintain the saturated refrigerant temperature within the specified controlband.

Lead-Lag is not available with the variable speed compressor option.

Units Equipped with 100% Modulating Exhaust Dampers

The exhaust dampers are controlled through an Exhaust/ Comparative Enthalpy Module (ECEM). The ECE module receives input form a space transducer and modulates the exhaust dampers to maintain the space pressure to within the specified setpoint controlband.

Units equipped with Hot Gas Reheat (Modulating Dehumidification)

When space humidity exceeds setpoint and the unit is loaded 50% or less, the modulating dehumidification function activates the reheat mode, providing dehumidification of the space.

The reheat valve and cooling valve are modulated to control the discharge air temperature to the reheat discharge air temperature setpoint. In reheat mode, the reheat valve is commanded to control the discharge air (15 to 85%) to the reheat setpoint; the cooling valve mirrors the reheat valve position (85 to 15%). The reheat coil pumpout valve is energized when the unit is in active cooling, and de-energized during all other times, including reheat mode.

All compressors will be staged up during active dehumidification. Circuit #2 is designated the reheat circuit and will feature additional refrigerant control devices as well as a split condenser coil with one section in the indoor air stream and the other in the outdoor coil compartment.

During active dehumidification the discharge air will be controlled to the Supply Air Reheat Setpoint by modulating the amount of reheat produced by the reheat coil. The Supply Air Reheat Setpoint, Occupied and Unoccupied Dehumidification Setpoints are adjustable via the human interface, BAS/Network control, or GBAS.

Active dehumidification will be terminated when the humidity in the space is reduced to the active space humidity setpoint - 5% or when an overriding condition such as heating or cooling demand or a failure occurs in a component required for dehumidification.

On VAV units, at startup, satisfying the VAV Occupied Cooling setpoint, MWU setpoint, and DWU setpoint will have priority over dehumidification mode. Once heating modes are satisfied, and the unit is satisfying the SA Cooling Setpoint, dehumidification mode will be entered if no more than half the unit mechanical cooling capacity is requested.

On SZVAV units, dehumidification will be similar to VAV modulating dehumidification with the exception of a dynamic Supply Air Reheat Setpoint. Rather than utilizing a static Supply Air Reheat Setpoint, once the unit enters dehumidification, the Discharge Air Setpoint will be calculated based on the Zone temperature vs. Zone Cooling Setpoint error and will be capped at the user selected Supply Air Reheat setpoint.

Dehumidification is not allowed during VAV Heating Modes (Changeover input closed). Once active, dehumidification control will remain active for a minimum of three minutes unless a priority unit shutdown request is received or the High Pressure Control input opens on either circuit.

Dehumidification control can be enabled separately for occupied and unoccupied modes of operation via the Human Interface and is overridden/disabled whether active or inactive by the following methods:

- Priority unit shutdown conditions (Emergency stop, Ventilation Override, Network Stop, etc.)
- Compressor circuit manual reset lockouts on either circuit. Low Refrigerant Charge monitoring is active during dehumidification mode and will lockout compressor circuits based on the same criteria used for cooling mode.
- Outdoor Air Temp is less then 40°F or greater the 100°F.
- Humidity Sensor Failure
- For VAV units, (in occupied) dehumidification will be disabled if space temp is less than the Dehumid Override Low Zone Setpoint or higher than the Dehumid Override High Zone Setpoint. If dehumidification is inactive it will not be allowed until it space temp rises higher than the Dehumid Override Low Zone Setpoint + 1.0°F or lower than the Dehumid Override High Zone Setpoint - 2.0°F.
- For SZVAV units, dehumidification will be disabled if space humidity levels have fallen below the Active Occ/Unocc Dehumidification Setpoint -5% Dehumidification Hysteresis Offset, the zone temperature has dropped too close to the Zone Heating Setpoint in any unit mode (Zone Temp. is less than ZHSP + 0.5°F), the zone temperature rises above the Zone Cooling Setpoint +2°F in any unit mode, Entering Evaporator Temperature falls too low, Froststat input becomes active, or Dehumidification/ Reheat becomes disabled.
- For CV and all units in unoccupied, if space temp is less than the Zone Heating Setpoint (ZHSP) + 0.5° F if dehumidification is active or less than ZHSP+ 1.0° F if not dehumidification mode will be disabled. If zone conditions result in a cooling request for more than one-half the available cooling capacity of the unit dehumidification will be disabled and will transition to cooling control. If dehumidification is inactive, dehumidification will not be allowed until the active unit cooling capacity request drops to half the available cooling capacity or less, unless the space temp is less than the Zone Cooling Setpoint.
- In CV units in occupied mode, if the unit is not in AUTO system mode and is set to HEAT system mode via the HI, BAS, or Zone Sensor device, dehumidification control will be disabled at space temps above Occupied ZCSP + 1.0° F. If dehumidification is inactive it will not be allowed to activate if space temp is greater than the OZCSP.

All units configured for modulating dehumidification will have a reheat condenser coil purge function to ensure proper refrigerant distribution in the reheat circuit. This feature is always enabled and will monitor the amount of cumulative compressor run time while the reheat condenser coil pumpout relay is in a certain state. If compressors accrue an amount of run time equal to the HI-adjustable purge interval time without the pumpout relay changing states a purge cycle will be initiated lasting for three minutes.

During this cycle all compressors but the 2nd compressor on circuit #2 will be energized if not already, the reheat valve and cooling valves to will be set to 50%, and the reheat coil pumpout relay will be toggled to its opposite state. After the three-minute purge cycle completes the purge interval timer will be reset and all system components will return to the state they were in prior to entering purge.

During dehumidification control an evaporator frost control function designed specifically for reheat modes will be active. This function will reduce refrigeration circuit capacity to 50% (1st compressor on each circuit remaining on two circuit units) when the Entering Evaporator Temp drops below a non-adjustable limit of 35° F for 10 continuous minutes. Once capacity is reduced, it will remain reduced until the current cycle of dehumidification is terminated or a purge cycle occurs.

If the Entering Evaporator Temp remains below 35° F for an additional 10 minutes the remaining compressors on will be deactivated and remain off until the Entering Evaporator Temp rises above 45°F. Even though all compressors have been deactivated the unit will remain in dehumidification mode and re-enable compressors up to 50% capacity when the Entering Evaporator Temp rises to 45°F or greater.

Units with Evaporative Condenser Sequence of Operation

Upon a power up without water in the sump, the condenser sump drain will be controlled to allow the sump to hold water. The fill relay will be energized if there is a call for mechanical cooling and if the outdoor air temperature

is greater than 10°F on units with a sump heater installed or greater than 40°F on units without sump heat.

Once the fill solenoid is energized, the sump will begin to fill. The minimum water level switch will close and the fill relay will be de-energized. The sump water temperature sensor is invalid unless the minimum water level switch is closed.

If the sump water temperature is less than the setpoint (default is 38°F), the sump heater will be energized until the water temperature reaches the setpoint plus 5 degrees (43°F for default). The fill solenoid will remain closed for 20 minutes or until the water temperature is greater than 35°F. Once a water temperature of 35°F or greater is achieved, the fill solenoid is energized, the sump will continue to fill, and a five minute timer is started.

When the timer expires, the compressor lockout will be released and mechanical cooling will be allowed. Head pressure control will be regulated by a variable speed fan until the liquid line pressure from either circuit reaches the upper limit, which is set on the Human Interface under the setup menu 120°F default. The liquid line pressure is converted to a temperature for display at the Human Interface. When the temperature exceeds the upper limit, the condenser sump pump will be energized. When the sump pump is energized, water is pumped from the sump and sprayed over the condenser coil. If the liquid line pressure from either circuit falls below the lower limit the sump pump will be de-energized.

When the sump pump is energized or de-energized a change in state is observed from an auxiliary contactor to ensure proper sump pump operation. A change in states must be observed by the auxiliary contactor within 6 seconds of the command to change states or mechanical cooling will be locked out on a sump pump failure causing a manual reset diagnostic to be set.

The fill solenoid will remain energized and the water level will be controlled by the mechanical float valve. If the maximum level float ever closes, an information-only diagnostic is set and the fill solenoid is de-energized. This is an indication that the mechanical float is not adjusted properly or a failure of the mechanical float valve has occurred. If the maximum level input is open for two continuous minutes, the diagnostic will be cleared and the fill solenoid will be energized.

If the sump water temperature ever drops below 35°F, the drain actuator will be controlled in order to drain the water from the sump. If there is a call for mechanical cooling and the outdoor air temp is greater than 10°F on units with sump heat installed or greater than 40°F on units without sump heat, the unit will be allowed to refill the sump.

The drain control can be configured via the Human Interface, and by the drain actuator installation, to hold or drain water on power loss; the default is set to drain. Periodic purge is a cyclic opening of the drain to remove debris and buildup from the sump and add additional fresh water to the sump. Periodic purge has an adjustable interval from the setup menu on the Human Interface with a range of 1-12 hours or can be set to disabled—the default position if periodic purge is not required. The duration of the blowdown, or the time that the drain valve is opened, is adjustable to a range of 5 to 255 seconds, with 60 seconds being the default.

The optional conductivity controller also uses this timer to open the drain, when required, based on water quality. During this purge, the fill solenoid will remain energized to provide fresh water to the sump to replace water being released during the blowdown. Water treatment blowdown is provided by shorting the designated input on the customer-supplied terminal strip. This gives the customer more flexibility in determining water conditions via external controls. Once the input is detected closed, the drain valve will be opened for a time equal to the Human Interface adjustable periodic purge duration.

Once the duration timer expires, or if the minimum level switch opens, the drain valve will be closed and the water treatment blowdown input will be ignored for 15 minutes. During this blowdown the fill relay will remain open to provide fresh water to the sump. The adjustable duration time period should be set so that during drain operation 1 inch of water is drained from the sump with the fill solenoid valve closed. If the minimum water level switch opens during a blowdown cycle, the unit will de-energize the sump pump in order to protect the compressors and sump heater from insufficient water levels. Once the water level reaches the minimum level input and this input closes for 10 seconds, the compressors and sump heater operations will be allowed to restart.

Evaporative Condenser Drain Valve Setup

The drain valve is shipped to “Drain During Unit Power Loss Conditions.” This means that when the unit disconnect is turned off, the 1S2 toggle switch is turned off, or the unit loses power, the drain will open. The valve is spring loaded and will travel from fully closed to fully open in approximately 25 seconds.

This is desirable in cold climates where a risk of freezing exists. In milder climates it may be desirable to keep the water in the sump when unit power is off to avoid unnecessarily wasting water whenever the unit disconnect is turned off.

To convert the unit to “Hold During Unit Power Loss Conditions”:

1. Remove power from the unit.
2. Remove the weather shield cover (Figure 59, p. 90).
3. Loosen the shaft set screw (Figure 59), remove the locking clip, and remove the shaft adapter (Figure 60, p. 90).
4. Lift the drain valve actuator and rotate it to the “hold during power loss” position (Figure 62, p. 90).
5. Reinstall the shaft adapter and locking clip and reinstall the actuator onto the base. Make sure the arrow on the shaft adapter is set to 0°.

6. Make sure the valve is in the fully closed position, then tighten the shaft set screw.
7. Reinstall the weather shield cover.
8. Restore power to the unit.
9. At the human interface, press SETUP, NEXT until "Head Pressure Control Setup Submenu" appears. Press ENTER.
10. Change the "Sump Drain Valve Relay Control" from Drain to Hold

Figure 59. Drain valve actuator with weather shield

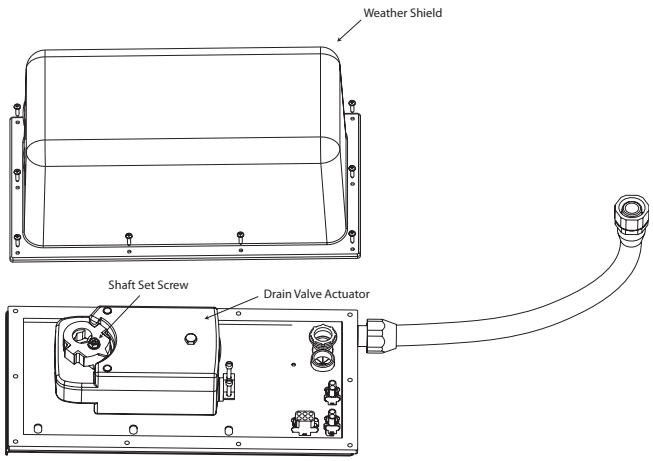

Figure 60. Actuator shaft adapter removal/assembly

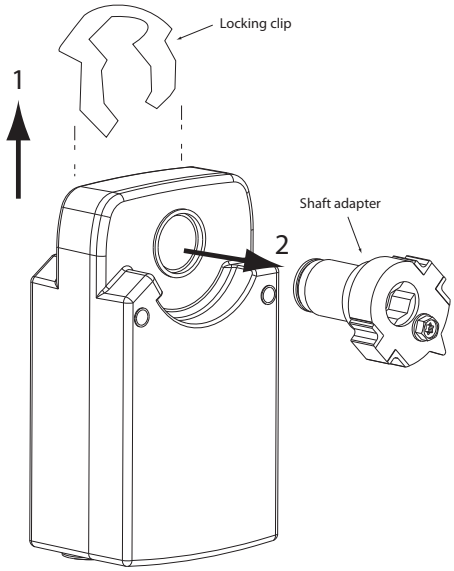

Figure 61. Chemical water treatment tree

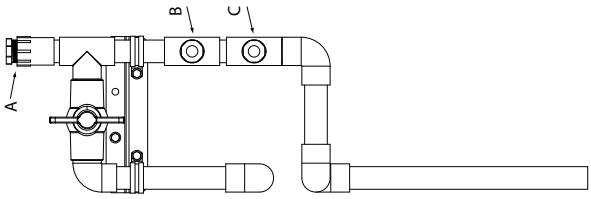

Figure 62. Actuator is shipped in "drain during power loss" configuration

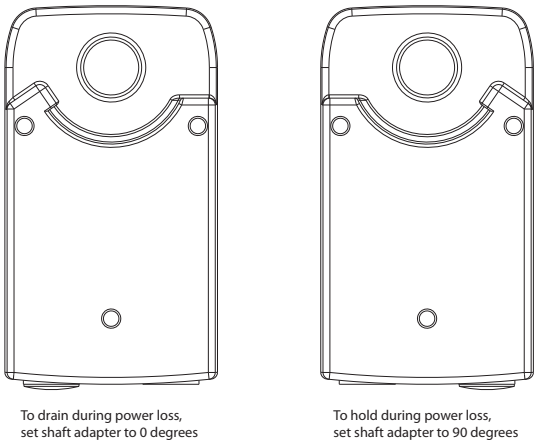

Set Drain Duration Timer

Enter service test mode from unit Human Interface. Navigate to the compressor condenser fan submenu. Under head pressure control, use manual control.

Close drain valve and energize water inlet solenoid valve until water reaches nominal level. Once level is achieved, de-energize fill solenoid. Open drain valve and time how long it takes for the water level to drop 1 inch; make sure to take into account the closing time of the valve.

Chemical Water Treatment Tree

The Trane evaporative condenser comes with a PVC tree to allow easier inputs for third party water treatment. The tee labeled A is a ¾ inch NPT threaded input, see Figure 61. Tees B and C are ½ inch NPT threaded inputs. The ball valve can be used to stop the water flow through the tree to allow the customer to add hookup of water treatment, or to change and update water treatment with the unit running.

Units with Dolphin WaterCare or conductivity sensor will have the conductivity sensor installed into the ¾ inch tee with the other tees plugged. For all other units, A, B and C will be plugged, see Figure 61. Ensure the ball valve is in the open position when water treatment is being operated in the system to make sure water flows through the tree and transports treatment to the unit sump.

Conductivity Controller

Upon startup, the conductivity controller must be calibrated and setup for operation. Below are the necessary steps to accomplish those tasks. The controller has two setpoints that control two relays. Both of these setpoints will need to be set by Dolphin or a local water treatment expert.

- The first setpoint is the standard point blowdown point.
  - When the setpoint is exceeded the relay (K1) will be energized and a blowdown request will close the Water treatment request binary input on the MCM.
- The second setpoint will be the emergency point
  - The second setpoint will open the normally closed K2 relay which will interrupt the sump proving circuit which will generate a manual lockout. This second setpoint will be used to protect the unit from extremely high conductivity that would indicate a failure in the system.
- Inside the enclosure for the controller, there will be a thermostat and strip heater that will protect LCD from cracking at low ambient conditions. The thermostat closes at 15°F and opens at 25°F.

Procedure to calibrate conductivity

Note: Visit this web page for additional documentation: <http://www.gfsignettools.com/products/pdf/8860eng.pdf>

- Use a calibrated thermometer and a known conductivity rating. There are two different options for having a liquid with known conductivity:
  - Purchase a liquid with known conductivity rating
  - Purchase a handheld conductivity reader
- Close the ball valve on the chemical treatment tree and remove the conductivity sensor from the tree.
- Enter service test mode on the unit and turn the pump on, ensuring the compressors are set to Off.
- With the conductivity controller connected to the sensor and power, enter the CALIBRATE menu by holding down the ENTER key for 2 seconds.
- When asked for the calibration key code, press the UP > UP > UP > DOWN arrow keys in sequence.
- Using the UP and DOWN arrows, go to Chan 1 Cell: Standard. Ensure this channel is set to standard.
  - If not press the RIGHT arrow key and set to standard then press the ENTER key to return to the CALIBRATION menu.
- Using the UP and DOWN arrows, go to Chan 1 Cell. Ensure that the cell constant is set to 1.0.
  - If not press the RIGHT arrow and set the cell constant to 1.0; then press the ENTER key to return to the CALIBRATION menu.
- Using the UP and DOWN arrows, go to Chan 1 Set: Temperature and press the RIGHT arrow to enter the edit mode.
- Adjust the temperature on the controller to match the actual temperature .
- Press the ENTER key to save the input and return to the CALIBRATE menu.
- Using the UP and DOWN arrows, go to the Chan 1 Set: Conductivity and press the RIGHT arrow . to enter the edit mode.
- Adjust the conductivity on the controller to match the actual conductivity rating of the liquid.
- Press the ENTER key to save the conductivity rating and return to the CALIBRATE menu.
- When finished calibrating the controller, press the UP and DOWN key simultaneously to return to normal operating mode.

Procedure to set purge setpoints on the conductivity controller

Note: Visit this web page for additional documentation: <http://www.gfsignettools.com/products/pdf/8860eng.pdf>

- Work with local water treatment expert to identify nominal purge and emergency purge conductivity value.
- Close the ball valve on the chemical treatment tree and remove the conductivity sensor from the tree.
- Enter Service test mode on the unit HI and energize the sump pump, ensuring the compressors are set to OFF.
- With the conductivity controller connected to the sensor and power, enter the CALIBRATE menu by holding down the ENTER key for 2 seconds.
- When asked for the calibration key code, hit the
- UP > UP > UP > DOWN arrow keys in sequence.
- Using the UP and DOWN arrows, go to Relay 1 Setpoint and press the RIGHT arrow to enter edit mode (K1).
- Adjust the setpoint to the nominal blowdown conductivity value.
- Press the ENTER key to return to the CALIBRATE menu.
- Using the UP and DOWN arrows, go to Relay 2 Setpoint: and press the RIGHT arrow key to enter edit mode (K2).
- Adjust the set point to the emergency conductivity value.
- Press the ENTER key to return to the CALIBRATE menu.
- When finished setting the values, press the UP and DOWN key simultaneously to return to normal operating mode.

Gas Heating Sequence of Operation

Standard Two-Stage Gas Furnace

The control system for the rooftop units are wired to ensure that the heating and cooling do not occur simultaneously. Refer to the wiring diagram that shipped with the unit while reviewing the following sequence of operation.

Honeywell Ignition System

When a heating requirement exists, the Rooftop Module (RTM) starts the supply fan and sends a request for heat to the Heat Module. The Heat Module closes K1 contacts and starts the combustion blower motor (4B11). The combustion blower motor starts on low speed through the normally closed combustion blower relay (4K33) contacts.

The supply airflow switch (4S38) and the combustion air switch (4S25) closes. Power is applied through the high limit cutout (4S26) to the Honeywell ignition control board (4U18). The ignition control board (4U18) starts a pre-purge timing cycle. At the end of the pre-purge cycle, the ignition transformer (4T7) and the pilot solenoid valve (4L9) are energized. This starts a 10 second trial for pilot ignition. When the pilot flame is established and sensed by the flame sensing rod (4U19), stage 1 of the main gas valve (4L7) and the 60 seconds sequencing time delay relay (4DL6) is energized.

The system will operate in the low heat mode until there is an additional call for heat is established by closing the K3 contacts on the Heat Module.

On Discharge Temperature Control systems, the sequencing time delay relay (4DL6) will energize the combustion blower motor relay (4K33) which switches the combustion blower motor to high speed and energizes the 2nd stage solenoid on the gas valve (4L7) after approximately 60 seconds.

If the flame rod (4U19) does not detect a pilot flame within the 10 second trial for ignition period, the control will lockout. If a flame failure occurs during operation, the gas valve (4L7), the sequencing time delay relay (4DL6), and the combustion blower relay (4K33) is de-energized. The system will purge and attempt to relight the pilot. If a flame is not detected after this attempt, the Honeywell ignition control (4U18) will lock out. The combustion blower motor will continue to operate as long as a heating demand exists and the system switch (4S24) is ON.

Once the heating demand has been satisfied, the combustion blower and the Honeywell ignition control board (4U18) is de-energized.

Propane Gas

Units that operate on propane gas after 1990 have two (2) additional controls that affect the combustion blower motor operation and the sequence of the gas valve operation.

With the post purge time delay relay (4DL4), the additional service switch (4S24), and the additional 115 volt control relay (4K31) installed, the sequence of operation is as follows:

- Power is applied to the Honeywell ignition control board (4U18) through the high limit switch (4S26).
- The Honeywell ignition control board (4U18) will sequence through its pre-purge timing and pilot ignition sequence to
- The post purge time delay relay (4DL4) delays the starting of the combustion blower motor by approximately 60 seconds.
- Once the timing has elapsed, the combustion blower motor will start, closing the combustion air switch (4S25).

Energize the control relay (4K31) and the sequence time delay relay (4DL6). 24 volts is applied from the new service switch (4S24) through the normally open control relay (4K31) contacts to energize the 1st stage solenoid on the gas valve (4L7).

On an additional call for heat, the K3 contacts on the Heat Module will close to energize the combustion blower relay (4K33) which switches the combustion blower motor to high speed and closes its normally open contacts allowing 24 volts to energize the 2nd stage on the gas valve (4L7).

Once the heating demand has been satisfied, the Honeywell ignition control board (4U18) and the post purge time delay relay (4DL4) is de-energized. The combustion blower motor will continue to operate for approximately 15 seconds to purge the heat exchanger on the OFF cycle.

Modulating Gas Sequence of Operation—Full and Limited Modulating Gas Furnace

The control system for the rooftop units are wired to ensure that the heating and cooling do not occur simultaneously. Refer to the modulating heat wiring diagram that shipped with the unit while reviewing the following sequence of operation. As you review the sequence of operations, keep the following in mind:

- The furnace will not light unless the manual gas valves are open and the control circuit switch 4S24 is closed.
- The control systems are wired to ensure that heating and cooling cannot occur simultaneously.
- The unit supply fans must run continuously so air flow switch 4S38 will stay closed.
- Modulating Gas heat is available during both occupied and unoccupied operation.

Whenever there is a call for heat, 1U50-K1 energizes and combustion blower motor 4B11 begins to operate at High speed on the 850 and 1000 MBH heaters. The blower will operate on low speed for the 500 MBH. A relay 4K119 in parallel with the main gas valve actuator control output, ensures the actuator will be open prior to proof of flame. This will force the combustion air actuator 4U82 to the open position, causing the auxiliary switch on 4U82 to close. This ensures complete purging of the combustion chamber during the 60 second purge cycle.

Ignition control IC board 4U18 will not energize, however, unless the supply air flow switch 4S38, combustion air flow switch 4S25, high limit cutout 4S26, the auxiliary

switch on combustion air actuator 4U82 and the proof of closure switch on gas valve 4L22 are closed. These are all part of the safety interlock system.

With all these conditions satisfied, the IC board energizes and initiates an internal 60 second pre-purge time delay. When the pre-purge period expires, 4U18 energizes both the ignition transformer 4T7 and solenoid 4L9 on the intermittent pilot valve. At that point, 4U18 gives electrode 4E1 approximately 10 seconds to establish a pilot flame. (The presence of this flame is proven by flame rod 4U19.)

If 4U18 does not detect a pilot flame at the end of this period, it will shut down and lock out the ignition / combustion circuit.

If the pilot is ignited within 10 seconds, the IC board de-energizes the ignition transformer 4T7 and electrode 4E1. At this point, relay 4K119 will energize, starting the combustion air actuator and the furnace. The feedback signal from the discharge temperature sensor will cause the modulating output from the heat module to change the damper position as required to maintain the outlet temperature within the desired band.

Flame Failure

In the event that IC board 4U18 loses the "proof-of-flame" input signal during furnace operation, it will make one attempt at reignite. If a flame is not reestablished within the 10 second trial period, 4U18 will shut down and lock out the ignition /combustion control circuit. (Combustion blower motor 4B11 continues to run as long as a heating requirement exists and control circuit switch 4S24 is ON.)

Once locked out on flame failure, the IC board will not reactivate the ignition/combustion control circuit until it is reset manually. To do this, press the reset button on the front of the IC board case.

A set of relay contacts are available for external use for heat fail (Information Only).

Note: The modulating gas heaters are factory adjusted for the proper air/gas ratio at minimum and nameplate rated firing MBH for most areas in the country.

Electric Heat Sequence of Operation

The control system for the rooftop units are wired to ensure that the heating and cooling do not occur simultaneously. Refer to the electric heat wiring diagrams that shipped with the unit while reviewing the following sequence of operation. As you review the sequence of operations, remember these points:

- Whenever there is a call for heat, 1U50-K1 energizes. This energizes HEAT 1 contactors 4K34 and 4K35 which, in turn, energize two of the six 4HR3 heating elements.

Note: Electric heater 4HR3 will only energize if both of the heat section's high limit safety controls—4S27 and 4S33—are closed.

- High limit Switch 4S27 will trip if exposed to a temperature of 133 + 5°F, and reset automatically once the temperature falls to 110 + 5°F. It is mounted on the control-box-side of the electric heat element assembly.
- Linear high limit 4S33 is encased in a capillary that extends across the unit's supply air opening, and is anchored near the bottom of the heat section control box. It is designed to trip if the temperature across any 6" span of the capillary exceeds 185 + 10°F. Refer to Table 70, p. 164 The HEAT 2 (4K36, 4K37) and HEAT 3 (4K38, 4K39) contactors are not energized unless the 1st stage bank of heating elements already operating are not satisfying the heating load.

Wet Heat Sequence of Operation

Electrical circuitry for units with steam or hot water heat is limited to the connections associated with the modulating valve actuator (4U15) and the freezestat (4S12).

Like the furnaces described earlier, SL/SH control systems are wired to ensure that simultaneous heating and cooling do not occur. The supply fan will cycle ON and OFF with each call for heat during both an occupied and unoccupied period.

Whenever there is a call for heat, 1U50-K3 energizes. This allows a modulated voltage signal to be sent to the "Wet" heat actuator 4U15. Depending on the value of this signal, 4U15 regulates the flow of steam or hot water through the coil by positioning the valve stem at some point between fully closed 2 VDC and fully open (10 VDC).

Freeze Protection

A freezestat (4S12) is mounted inside the heat section of SLH_ and SSH_ units to prevent the "wet" heat coil from freezing during the OFF cycle.

If the temperature of the air leaving the heating coils falls to 40°F, the freezestats normally-open contacts close, completing the heat fail circuit on the UCM. When this occurs:

a. The supply fan is turned OFF.
b. "Wet" heat actuator 4U15 fully opens to allow hot water or steam to pass through the heating coil and prevent freeze-up.
c. A "Heat Fail" diagnostic is displayed on the Human Interface LCD screen.

For heating control settings and time delay specifications, refer to Table 70, p. 164.

Use the checklist provided below in conjunction with the "General Unit Requirement" checklist to ensure that the unit is properly installed and ready for operation. Be sure to complete all of the procedures described in this section before starting the unit for the first time.

- Turn the field-supplied disconnect switch, located upstream of the rooftop unit, to the OFF position.

⚠WARNING

Hazardous Voltage!

Disconnect all electric power, including remote disconnects before servicing. Follow proper lockout/tagout procedures to ensure the power can not be inadvertently energized. Failure to disconnect power before servicing could result in death or serious injury.

- Turn the 115 volt control circuit switch 1S1 to the OFF position. It is located in the secondary of the 1T1 transformer.
- Turn the 24 volt control circuit switch 1S70 to the OFF position. It is located in the secondary of the 1T2 & 1T3 transformers.
- Turn the "System" selection switch (at the Remote Panel) to the OFF position and the "Fan" selection switch (if Applicable) to the "Auto" or OFF position.
- Check all electrical connections for tightness and "point of termination" accuracy.
- Verify that the condenser airflow will be unobstructed.
- Check the compressor crankcase oil level. Oil should be visible in the compressor oil sight glass. The oil level should be 1/2 to 3/4 high in the sight glass with the compressor OFF.
- Verify that the compressor discharge service valve and the liquid line service valve is back seated on each circuit.

NOTICE:

Compressor Damage!

Do not allow liquid refrigerant to enter the suction line. Excessive liquid accumulation in the liquid lines may result in compressor damage. Compressor service valves must be fully opened before start-up (suction, discharge, liquid line, and oil line).

Do not start the unit in the cooling mode if the ambient temperature is below the following minimum recommended operating temperatures:

Standard unit with or without HGBP -

+55 F for 20 & 40 ton

+50 F for 25 & 30 ton

+45 F for 70 thru 130 ton

+35 F for 50 & 55 ton

+30 F for 60 ton

Units with Low Ambient option without HGBP - 0°F

Units with Low Ambient option with HGBP - +10°F

Note: To prevent compressor damage due to no refrigerant flow, do not pump the system down with the compressor(s) below 25 PSIG under any circumstance.

- Check the supply fan belts for proper tension and the fan bearings for sufficient lubrication. If the belts require adjustment, or if the bearings need lubricating, refer to the Service/Maintenance section of this manual for instructions.
- Inspect the interior of the unit for tools and debris. Install all panels in preparation for starting the unit.

Electrical Phasing

Unlike traditional reciprocating compressors, scroll compressors are phase sensitive. Proper phasing of the electrical supply to the unit is critical for proper operation and reliability. Color paint dots on the terminal block should match that of the associated wire attached to the lug.

The compressor motor is internally connected for clockwise rotation with the incoming power supply phased as A, B, C.

Proper electrical supply phasing can be quickly determined and corrected before starting the unit by using an instrument such as an Associated Research Model 45 Phase Sequence Indicator and following the steps below:

⚠WARNING

Hazardous Voltage!

Disconnect all electric power, including remote disconnects before servicing. Follow proper lockout/tagout procedures to ensure the power can not be inadvertently energized. Failure to disconnect power before servicing could result in death or serious injury.

- Turn the field-supplied disconnect switch that provides power to terminal block 1TB1 or to the unit-mounted disconnect switch 1S14 to the OFF position.
- Connect the phase sequence indicator leads to the terminal block or unit-mounted disconnect switch as follows:

Table 44. Connecting phase sequence leads

Phase sequence leads	Unit power terminal
Black (Phase A)	L1
Red (Phase B)	L2
Yellow (Phase C)	L3

⚠WARNING

Live Electrical Components!

During installation, testing, servicing and troubleshooting of this product, it may be necessary to work with live electrical components. Have a qualified licensed electrician or other individual who has been properly trained in handling live electrical components perform these tasks. Failure to follow all electrical safety precautions when exposed to live electrical components could result in death or serious injury.

- Close the disconnect switch or circuit protector switch that provides the supply power to the units terminal block 1TB1 or the unit-mounted disconnect switch 1S14.

  HIGH VOLTAGE IS PRESENT AT TERMINAL BLOCK 1TB1 OR UNIT DISCONNECT SWITCH 1S14.
- Observe the ABC and CBA phase indicator lights on the face of the sequencer. The ABC indicator light will glow if the phase is ABC. If the CBA indicator light glows, open the disconnect switch or circuit protection switch and reverse any two power wires.
- Restore the main electrical power and recheck the phasing. If the phasing is correct, open the disconnect switch or circuit protection switch and remove the phase sequence indicator.

Voltage Supply and Voltage Imbalance

Voltage Supply

Electrical power to the unit must meet stringent requirements for the unit to operate properly. Measure each leg (phase-to-phase) of the power supply. Each reading must fall within the utilization range stamped on the unit nameplate. If any of the readings do not fall within the proper tolerances, notify the power company to correct this situation before operating the unit.

Voltage Imbalance

Excessive three phase voltage imbalance between phases will cause motors to overheat and eventually fail. The maximum allowable voltage imbalance is 2%. Measure and record the voltage between phases 1, 2, and 3 and calculate the amount of imbalance as follows:

$$\text{\% Voltage Imbalance} = \frac{100 \text{ X AV - VD}}{\text{AV}} \quad \text{where}$$

$$\text{AV (Average Voltage)} = \frac{\text{Volt 1 + Volt 2 + Volt 3}}{3}$$

V1, V2, V3 = Line Voltage Readings

VD = Line Voltage reading that deviates the farthest from the average voltage.

Example: If the voltage readings of the supply power measured 221, 230, and 227, the average volts would be:

$$\frac{221 + 230 + 227}{3} = 226 \text{ Avg.}$$

VD (reading farthest from average) = 221

The percentage of Imbalance equals:

$$\frac{100 \text{ X } 226 - 221}{226} = 2.2\%$$

The 2.2% imbalance in this example exceeds the maximum allowable imbalance of 2.0%. This much imbalance between phases can equal as much as a 20% current imbalance with a resulting increase in motor winding temperatures that will decrease motor life. If the voltage imbalance is over 2%, notify the proper agencies to correct the voltage problem before operating this equipment.

Table 45. Service test guide for component operation—Part I of II

Component Being Tested	COMPONENT CONFIGURATION										
	Supply Fan	Return Fan	Exhaust Fan	Condenser Fans	Heat Stages			Compressor Stage			
					1	2	3	1	2	3	4
SUPPLY FAN	ON	ON	OFF	ALL OFF	OFF	OFF	OFF	OFF	OFF	OFF	OFF
CONDENSER FANS											
20 Ton—Air Cooled											
A-2B1	OFF	OFF	OFF	A-On/B-Off	OFF	OFF	OFF	OFF	OFF	OFF	OFF
B-2B2	OFF	OFF	OFF	A-Off/B-On	OFF	OFF	OFF	OFF	OFF	OFF	OFF
25–30 Ton—Air Cooled											
A-2B1	OFF	OFF	OFF	A-On/B-Off	OFF	OFF	OFF	OFF	OFF	OFF	OFF
B-2B2/2B3	OFF	OFF	OFF	A-Off/B-On	OFF	OFF	OFF	OFF	OFF	OFF	OFF
40 Ton—Air Cooled											
1A-2B1	OFF	OFF	OFF	1A-On/1B-Off 2A-Off/2B-Off	OFF	OFF	OFF	OFF	OFF	OFF	OFF
1B-2B2	OFF	OFF	OFF	1A-Off/1B-On 2A-Off/2B-Off	OFF	OFF	OFF	OFF	OFF	OFF	OFF
2A-2B4	OFF	OFF	OFF	1A-Of/1B-Off 2A-On/2B-Off	OFF	OFF	OFF	OFF	OFF	OFF	OFF
2B-2B5	OFF	OFF	OFF	1A-Off/1B-Off 2A-Off/2B-On	OFF	OFF	OFF	OFF	OFF	OFF	OFF
50 Ton—Air Cooled											
1A-2B1	OFF	OFF	OFF	1A-On/1B-Off 2A-Off/2B-Off	OFF	OFF	OFF	OFF	OFF	OFF	OFF
1B-2B2/2B3	OFF	OFF	OFF	1A-Off/1B-On 2A-Off/2B-Off	OFF	OFF	OFF	OFF	OFF	OFF	OFF
2A-2B4	OFF	OFF	OFF	1A-Off/1B-Off 2A-On/2B-Off	OFF	OFF	OFF	OFF	OFF	OFF	OFF
2B-2B5/2B6	OFF	OFF	OFF	1A-Off/1B-Off 2A-Off/2B-On	OFF	OFF	OFF	OFF	OFF	OFF	OFF
60–75 Ton—Air Cooled											
1A-2B1	OFF	OFF	OFF	1A-On/1B-Off 2A-Off/2B-Off	OFF	OFF	OFF	OFF	OFF	OFF	OFF
1B-2B2/2B3	OFF	OFF	OFF	1A-Off/1B-On 2A-Off/2B-Off	OFF	OFF	OFF	OFF	OFF	OFF	OFF
2A-2B4	OFF	OFF	OFF	1A-Off/1B-Off 2A-On/2B-Off	OFF	OFF	OFF	OFF	OFF	OFF	OFF
2B-2B5/2B6	OFF	OFF	OFF	1A-Off/1B-Off 2A-Off/2B-On	OFF	OFF	OFF	OFF	OFF	OFF	OFF
90 Ton—Air Cooled											
1A-2B3/2B14	OFF	OFF	OFF	1A-On/1B-Off 2A-Off/2B-Off	OFF	OFF	OFF	OFF	OFF	OFF	OFF
1B-2B1/2B2	OFF	OFF	OFF	1A-Off/1B-On 2A-Off/2B-Off	OFF	OFF	OFF	OFF	OFF	OFF	OFF
2A-2B6/2B13	OFF	OFF	OFF	1A-Off/1B-Off 2A-On/2B-Off	OFF	OFF	OFF	OFF	OFF	OFF	OFF
2B-2B4/2B5	OFF	OFF	OFF	1A-Off/1B-Off 2A-Off/2B-On	OFF	OFF	OFF	OFF	OFF	OFF	OFF
105 & 115 Ton—Air Cooled											
1A-2B3/2B14	OFF	OFF	OFF	1A-On/1B-Off 2A-Off/2B-Off	OFF	OFF	OFF	OFF	OFF	OFF	OFF
1B-2B1/2B2/2B19	OFF	OFF	OFF	1A-Off/1B-On 2A-Off/2B-Off	OFF	OFF	OFF	OFF	OFF	OFF	OFF
2A-2B6/2B13	OFF	OFF	OFF	1A-Off/1B-Off 2A-On/2B-Off	OFF	OFF	OFF	OFF	OFF	OFF	OFF
2B-2B4/2B5/2B15	OFF	OFF	OFF	1A-Off/1B-Off	OFF	OFF	OFF	OFF	OFF	OFF	OFF

Table 45. Service test guide for component operation—Part I of II (continued)

Component Being Tested	COMPONENT CONFIGURATION										
	Supply Fan	Return Fan	Exhaust Fan	Condenser Fans	Heat Stages			Compressor Stage			
					1	2	3	1	2	3	4
				2A-Off/2B-On							
130 Ton—Air Cooled											
1A-2B3/2B14	OFF	OFF	OFF	1A-On/1B-Off 2A-Off/2B-Off	OFF	OFF	OFF	OFF	OFF	OFF	OFF
1B-2B1/2B2/2B19/2B20	OFF	OFF	OFF	1A-Off/1B-On 2A-Off/2B-Off	OFF	OFF	OFF	OFF	OFF	OFF	OFF
2A-2B6/2B13	OFF	OFF	OFF	1A-Off/1B-Off 2A-On/2B-Off	OFF	OFF	OFF	OFF	OFF	OFF	OFF
2B-2B4/2B5/2B15/2B21	OFF	OFF	OFF	1A-Off/1B-Off 2A-Off/2B-On	OFF	OFF	OFF	OFF	OFF	OFF	OFF
24, 29, 36, 48, 59, 73, 80, 89 Ton—Evaporative Condensing											
1A	OFF	OFF	OFF	1A On 100%	OFF	OFF	OFF	OFF	OFF	OFF	OFF
RETURN FAN	ON	ON	N/A	ALL OFF	OFF	OFF	OFF	OFF	OFF	OFF	OFF
EXHAUST FAN	OFF	N/A	ON	ALL OFF	OFF	OFF	OFF	OFF	OFF	OFF	OFF
GAS HEAT (Full Capacity)	ON	ON	OFF	ALL OFF	ON	ON	N/A	OFF	OFF	OFF	OFF
STAGE 1	ON	ON	OFF	ALL OFF	ON	OFF	N/A	OFF	OFF	OFF	OFF
STAGE 2 (High Fire Adjustment)	ON	ON	OFF	ALL OFF	OFF	ON	N/A	OFF	OFF	OFF	OFF
FULL MODULATING (Low Fire Adjustment)	ON	ON	OFF	ALL OFF	5% Select			OFF	OFF	OFF	OFF
LIMITED MODULATING (High Fire Adjustment)	ON	ON	OFF	ALL OFF	90% Select			OFF	OFF	OFF	OFF
LIMITED MODULATING (Low Fire Adjustment)	ON	ON	OFF	ALL OFF	33% Select			OFF	OFF	OFF	OFF
ELECTRIC HEAT	ON	ON	OFF	ALL OFF	ON	ON	ON	OFF	OFF	OFF	OFF
Stage 1	ON	ON	OFF	ALL OFF	ON	OFF	OFF	OFF	OFF	OFF	OFF
Stage 2	ON	ON	OFF	ALL OFF	OFF	ON	OFF	OFF	OFF	OFF	OFF
Stage 3	ON	ON	OFF	ALL OFF	OFF	OFF	ON	OFF	OFF	OFF	OFF
HYDRONIC HEAT	OFF	OFF	OFF	ALL OFF	100% Select			OFF	OFF	OFF	OFF
PRE-HEATER	OFF	OFF	OFF	ALL OFF	ON	N/A	N/A	OFF	OFF	OFF	OFF
OUTSIDE AIR DAMPERS	OFF	OFF	OFF	ALL OFF	100% Select			OFF	OFF	OFF	OFF
EXHAUST DAMPERS	OFF	OFF	OFF	ALL OFF	100% Select			OFF	OFF	OFF	OFF
REHEAT											
Cooling Valve	OFF	OFF	OFF	OFF	OFF	OFF	OFF	OFF	OFF	OFF	OFF
Reheat Valve	OFF	OFF	OFF	OFF	OFF	OFF	OFF	OFF	OFF	OFF	OFF
Pumpout Solenoid	OFF	OFF	OFF	OFF	OFF	OFF	OFF	OFF	OFF	OFF	OFF
EVAP COND											
Sump Pump	OFF	OFF	OFF	OFF	OFF	OFF	OFF	OFF	OFF	OFF	OFF
Sump Heater	OFF	OFF	OFF	OFF	OFF	OFF	OFF	OFF	OFF	OFF	OFF
COMPRESSOR											
20–30 Ton											
A	ON	OFF	OFF	A-Off/B-On	OFF	OFF	OFF	K10-On	K11-Off	N/A	N/A
B	ON	OFF	OFF	A-On/B-Off	OFF	OFF	OFF	K10-Off	K11-On	N/A	N/A

Table 45. Service test guide for component operation—Part I of II (continued)

Component Being Tested	COMPONENT CONFIGURATION										
	Supply Fan	Return Fan	Exhaust Fan	Condenser Fans	Heat Stages			Compressor Stage			
					1	2	3	1	2	3	4
40–60 Ton											
1A	ON	OFF	OFF	1A-Off/1B-On 2A-Off/2B-Off	OFF	OFF	OFF	K11-On	K3-Off	K12-Off	K4-Off
1B	ON	OFF	OFF	1A-On/1B-Off 2A-Off/2B-Off	OFF	OFF	OFF	K11-On	K3-Off	K12-On	K4-Off
2A	ON	OFF	OFF	1A-Off/1B-Off 2A-Off/2B-On	OFF	OFF	OFF	K11-Off	K3-On	K12-Off	K4-Off
2B	ON	OFF	OFF	1A-Off/1B-Off 2A-On/2B-Off	OFF	OFF	OFF	K11-Off	K3-On	K12-Off	K4-On
70–90 Ton											
1A	ON	OFF	OFF	1A-Off/1B-On 2A-Off/2B-Off	OFF	OFF	OFF	K11-On	K3-Off	K12-Off	K4-Off
1B	ON	OFF	OFF	1A-On/1B-Off 2A-Off/2B-Off	OFF	OFF	OFF	K11-On	K3-Off	K12-On	K4-Off
2A	ON	OFF	OFF	1A-Off/1B-Off 2A-Off/2B-On	OFF	OFF	OFF	K11-Off	K3-On	K12-Off	K4-Off
2B	ON	OFF	OFF	1A-Off/1B-Off 2A-On/2B-Off	OFF	OFF	OFF	K11-Off	K3-On	K12-Off	K4-On
105–130 Ton											
1A	ON	OFF	OFF	1A-Off/1B-On 2A-Off/2B-Off	OFF	OFF	OFF	K11-Off	K3-On	K12-Off	K4-Off
1B	ON	OFF	OFF	1A-On/1B-Off 2A-Off/2B-Off	OFF	OFF	OFF	K11-Off	K3-On	K12-Off	K4-On
2A	ON	OFF	OFF	1A-Off/1B-Off 2A-Off/2B-On	OFF	OFF	OFF	K11-On	K3-Off	K12-Off	K4-Off
2B	ON	OFF	OFF	1A-Off/1B-Off 2A-On/2B-Off	OFF	OFF	OFF	K11-On	K3-Off	K12-On	K4-Off

Notes:
1. Compressors for the 20 thru 30 ton units can operate individually or together and in any order while in the SERVICE TEST mode.
2. Compressors 1A &1B and compressors 2A & 2B operate simultaneously within their respective circuits on the 40 thru 75 ton units. There is no 1B compressor for variable speed.
3. Condenser fan outputs can operate individually or together and in any order while in the SERVICE TEST mode.
4. Once the unit has started, refer to the Status Menu in the Human Interface for the OA CFM.
5. RTM OCC/UNOCC output in the Service Test Mode must be in the unoccupied mode to open the system VAV boxes or to drive the VFD to 100%.

IMPORTANT: Do not operate the compressors without the supply and condenser fans; low suction or high head pressure will develop and compressor damage may occur.

Table 46. Service test guide for component operation — Part II of II

Component Being Tested	Component Configuration			Occ Unocc Relay	Reheat	Sump Pump	Sump Heater	Dolphin
	Econo Damper	Exhaust Damper	VFD Output					
COMPRESSOR								
20–30 Ton								
A	Closed	Closed	0%	Default	OFF	OFF	OFF	OFF
B	Closed	Closed	0%	Default	OFF	OFF	OFF	OFF
40–60 Ton								
1A	Closed	Closed	0%	Default	OFF	OFF	OFF	OFF
1B	Closed	Closed	0%	Default	OFF	OFF	OFF	OFF
2A	Closed	Closed	0%	Default	OFF	OFF	OFF	OFF
2B	Closed	Closed	0%	Default	OFF	OFF	OFF	OFF
70–105 Ton								
1A	Closed	Closed	0%	Default	OFF	OFF	OFF	OFF
1B	Closed	Closed	0%	Default	OFF	OFF	OFF	OFF
2A	Closed	Closed	0%	Default	OFF	OFF	OFF	OFF
2B	Closed	Closed	0%	Default	OFF	OFF	OFF	OFF
115–130 Ton								
1A & 1B	Closed	Closed	0%	Default	OFF	OFF	OFF	OFF
2A & 2B	Closed	Closed	0%	Default	OFF	OFF	OFF	OFF
CONDENSER FANS								
20 Ton								
A-2B1	Closed	Closed	0%	Default	OFF	OFF	OFF	OFF
B-2B2	Closed	Closed	0%	Default	OFF	OFF	OFF	OFF
25–30 Ton								
A-2B1	Closed	Closed	0%	Default	OFF	OFF	OFF	OFF
B-2B2/2B3	Closed	Closed	0%	Default	OFF	OFF	OFF	OFF
40 Ton								
1A-2B1	Closed	Closed	0%	Default	OFF	OFF	OFF	OFF
1B-2B2	Closed	Closed	0%	Default	OFF	OFF	OFF	OFF
2A-2B4	Closed	Closed	0%	Default	OFF	OFF	OFF	OFF
2B-2B5	Closed	Closed	0%	Default	OFF	OFF	OFF	OFF
50 Ton								
1A-2B1	Closed	Closed	0%	Default	OFF	OFF	OFF	OFF
1B-2B2/2B3	Closed	Closed	0%	Default	OFF	OFF	OFF	OFF
2A-2B4	Closed	Closed	0%	Default	OFF	OFF	OFF	OFF
2B-2B5/2B6	Closed	Closed	0%	Default	OFF	OFF	OFF	OFF
60–75 Ton								
1A-2B1	Closed	Closed	0%	Default	OFF	OFF	OFF	OFF
1B-2B2/2B3	Closed	Closed	0%	Default	OFF	OFF	OFF	OFF
2A-2B4	Closed	Closed	0%	Default	OFF	OFF	OFF	OFF
2B-2B5/2B6	Closed	Closed	0%	Default	OFF	OFF	OFF	OFF
90 Ton								
1A-2B3/2B14	Closed	Closed	0%	Default	OFF	OFF	OFF	OFF
1B-2B1/2B2	Closed	Closed	0%	Default	OFF	OFF	OFF	OFF
2A-2B6/2B13	Closed	Closed	0%	Default	OFF	OFF	OFF	OFF
2B-2B4/2B5	Closed	Closed	0%	Default	OFF	OFF	OFF	OFF
105 & 115 Ton								
1A-2B3/2B14	Closed	Closed	0%	Default	OFF	OFF	OFF	OFF
1B-2B1/2B2/2B19	Closed	Closed	0%	Default	OFF	OFF	OFF	OFF
2A-2B6/2B13	Closed	Closed	0%	Default	OFF	OFF	OFF	OFF
2B-2B4/2B5/2B15	Closed	Closed	0%	Default	OFF	OFF	OFF	OFF
130 Ton								
1A-2B3/2B14	Closed	Closed	0%	Default	OFF	OFF	OFF	OFF
1B-2B1/2B2/2B19/2B20	Closed	Closed	0%	Default	OFF	OFF	OFF	OFF
2A-2B6/2B13	Closed	Closed	0%	Default	OFF	OFF	OFF	OFF
2B-2B4/2B5/2B15/2B21	Closed	Closed	0%	Default	OFF	OFF	OFF	OFF
24, 29, 36, 48, 59, 73, 80, 89 Ton								
1A	Closed	Closed	100%	Default	OFF	OFF	OFF	OFF
SUPPLY FAN	Closed	Closed	100%	Unocc	OFF	OFF	OFF	OFF
RETURN FAN	Closed	Closed	100%	Unocc	OFF	OFF	OFF	OFF
EXHAUST FAN	Closed	Closed	100%	Default	OFF	OFF	OFF	OFF
GAS HEAT (Full Capacity)	Closed	Closed	100%	Unocc	OFF	OFF	OFF	OFF
STAGE 1	Closed	Closed	100%	Unocc	OFF	OFF	OFF	OFF
STAGE 2 (High Fire Adjustment)	Closed	Closed	100%	Unocc	OFF	OFF	OFF	OFF

Table 46. Service test guide for component operation — Part II of II (continued)

Component Being Tested	Component Configuration			Occ Unocc Relay	Reheat	Sump Pump	Sump Heater	Dolphin
	Econo Damper	Exhaust Damper	VFD Output					
FULL MODULATING (Low Fire Adjustment)	Closed	Closed	100%	Unocc	OFF	OFF	OFF	OFF
LIMITED MODULATING (High Fire Adjustment)	Closed	Closed	100%	Unocc	OFF	OFF	OFF	OFF
LIMITED MODULATING (Low Fire Adjustment)	Closed	Closed	100%	Unocc	OFF	OFF	OFF	OFF
ELECTRIC HEAT	Closed	Closed	100%	Unocc	OFF	OFF	OFF	OFF
Stage 1	Closed	Closed	100%	Unocc	OFF	OFF	OFF	OFF
Stage 2	Closed	Closed	100%	Unocc	OFF	OFF	OFF	OFF
Stage 3	Closed	Closed	100%	Unocc	OFF	OFF	OFF	OFF
HYDRONIC HEAT	Closed	Closed	0%	Default	OFF	OFF	OFF	OFF
PRE-HEATER	Closed	Closed	0%	Default	OFF	OFF	OFF	OFF
OUTSIDE AIR DAMPERS	100% Open	Closed	0%	Default	OFF	OFF	OFF	OFF
EXHAUST DAMPERS	100%	100% Open	0%	Default	OFF	OFF	OFF	OFF
REHEAT								
Cooling Valve	Closed	Closed	0%	Default	100-0	OFF	OFF	OFF
Reheat Valve	Closed	Closed	0%	Default	0-100	OFF	OFF	OFF
Pumpout Solenoid	Closed	Closed	0%	Default	ON	OFF	OFF	OFF
EVAP COND								
Sump Pump	Closed	Closed	0%	Default	OFF	ON	OFF	ON
Sump Heater	Closed	Closed	100%	Default	OFF	OFF	ON	OFF

Note: See Service test guide notes, p. 98.

Important: Do not operate the compressors for extended periods of time without the condenser fans; high head pressure will develop.

Table 47. Service test guide component operation—evaporative condenser

Component Being Tested	Requirements (ON)	Requirements (OFF)
Compressors	Sump minimum level switch must be closed for a minimum of five minutes	No Requirements
Sump Pump	Sump minimum level switch must be closed for a minimum of five minutes	No Requirements
Condenser Fans	No Requirements	No Requirements
Fill Valve Relay	No Requirements	No Requirements
Drain Valve Actuator	No Requirements	No Requirements
Sump Heater	No Requirements	No Requirements

Notes:
1. Sump freeze protection is active during AUTO but is inactive in service test modes (head pressure control set to MANUAL).
2. Water treatment drain request will be ignored in service test.

Verifying Proper Fan Rotation

⚠WARNING

Hazardous Service Procedures!

The maintenance and troubleshooting procedures recommended in this manual could result in exposure to electrical, mechanical or other potential safety hazards. Always refer to the safety warnings provided throughout this manual concerning these procedures. Unless specified otherwise, disconnect all electrical power including remote disconnect and discharge all energy storing devices such as capacitors before servicing. Follow proper lockout/tagout procedures to ensure the power can not be inadvertently energized. When necessary to work with live electrical components, have a qualified licensed electrician or other individual who has been trained in handling live electrical components perform these tasks. Failure to follow all of the recommended safety warnings provided, could result in death or serious injury.

1. Ensure that the "System" selection switch at the remote panel is in the OFF position and the "Fan" selection switch for constant volume units is in the "Auto" position. (VAV units do not utilize a "Fan" selection input.)
2. Close the disconnect switch or circuit protector switch that provides the supply power to the units terminal block 1TB1 or the unit-mounted disconnect switch 1S14.
3. Turn the 115 volt control circuit switch 1S1 and the 24 volt control circuit switch 1S70 to the ON position.
4. Open the Human Interface access door, located in the unit control panel, and press the SERVICE MODE key to display the first service screen. Refer to the latest edition of the appropriate programming manual for CV or VAV applications for the SERVICE TEST screens and programming instructions.
5. Use Table 45, p. 96 to program the unit fans for operation by scrolling through the displays. All of the fans (Supply, Exhaust, and Condenser fans) can be programed to be On, if desired. Verify proper fan rotation for VFDs with bypass.

Refer to Figure 63, p. 102 for the condenser fan locations and the Human Interface designator.

6. Once the configuration for the Fans is complete, press the NEXT key until the LCD displays the "Start test in __Sec." screen. Press the + key to designate the delay before the test is to start. This service test begins after the TEST START key is pressed and the delay designated in this step has elapsed. Press the ENTER key to confirm this choice.
7. Press the TEST START key to start the test. Remember that the delay designated in step 6 must elapse before the fans will begin to operate.
8. Check the supply fan and the exhaust fans (if equipped) for proper rotation. The direction of rotation is indicated on FC fans by an arrow on the fan housings and for DDP fans by an arrow above the inlet cone. Check the condenser fans for clockwise rotation when viewed from the top.

   If all of the fans are rotating backward:

   a. Press the STOP key at the human interface module in the unit control panel to stop the fan operation.

⚠WARNING

Hazardous Voltage!

Disconnect all electric power, including remote disconnects before servicing. Follow proper lockout/tagout procedures to ensure the power can not be inadvertently energized. Failure to disconnect power before servicing could result in death or serious injury.

   b. Open the field-supplied disconnect switch upstream of the rooftop unit. Lock the disconnect switch in the open position while working at the unit.
   c. Interchange any two of the field connected main power wires at the unit terminal block 1TB1 or the factory mounted disconnect switch 1S14.

Note: Interchanging "Load" side power wires at the fan contactors will only affect the individual fan rotation. Ensure that the voltage phase sequence at the main terminal block 1TB1 or the factory mounted disconnect switch 1S14 is ABC as outlined in the "Electrical Phasing" section.

If some of the fans are rotating backward:

- Press the STOP key at the human interface module in the unit control panel to stop the fan operation.

⚠WARNING

Hazardous Voltage!

Disconnect all electric power, including remote disconnects before servicing. Follow proper lockout/tagout procedures to ensure the power can not be inadvertently energized. Failure to disconnect power before servicing could result in death or serious injury.

- Open the field-supplied disconnect switch upstream of the rooftop unit. Lock the disconnect switch in the open position while working at the unit.
- Interchange any two of the fan motor leads at the contactor for each fan that is rotating backwards.

Figure 63. Condenser fan location with human interface designator

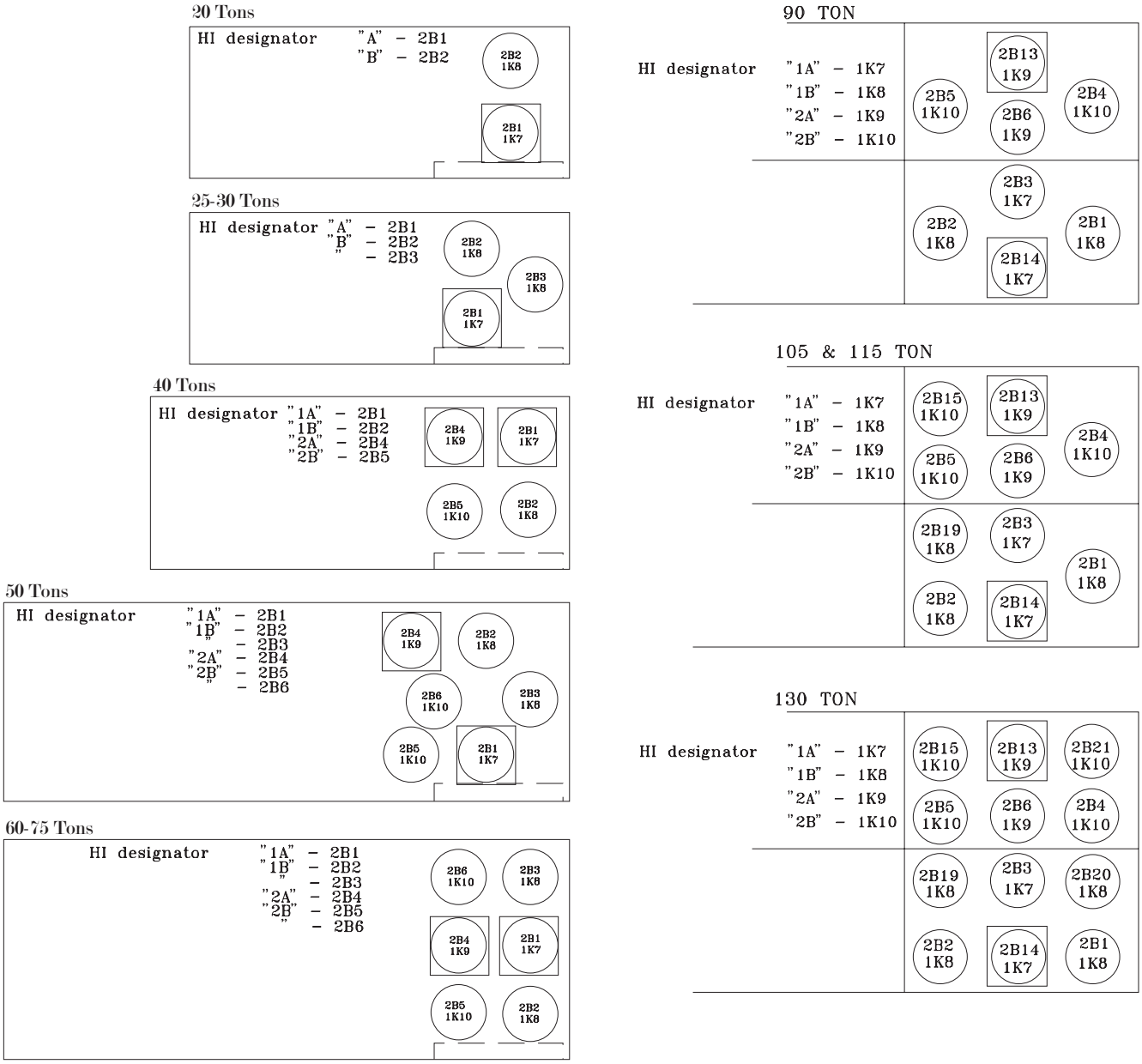

Direct-Drive Supply Fan Speed Adjustment

Units equipped with a DDP Supply Fan do not use belt/sheave arrangements to adjust fan speed. This adjustment is made through the IntelliPak™ Human Interface (HI). Refer to the Programming &Troubleshooting Guide (RT-SVP07*-EN) to get to the appropriate HI menu and make proper selections.

To make fan speed adjustments as required by the application:

1. Through the human interface, select Setup Menu.
2. Once in the Setup Menu, navigate to Device Characteristics Setup Definitions screen. Press Enter.
3. Navigate to Actuator Setup Supply Fan IGV/VFD Cmd Min and Max Voltage screens.
4. Change the Min and Max Voltage settings as shown in Table 48, p. 103 to adjust fan speed modulating range.

Table 48. Voltage ranges for DDP supply fan speed adjustments

Fan Speed (RPM)		VFD Frequency Range (Hz)		Actuator Setup Supply Fan IGV/VFD Cmd	
Max	Min	Max	Min	Max	Min
2400	888	83	31	10.0	2.4
2300	851	79	29	9.4	2.1
2200	814	76	28	9.0	1.9
2100	777	72	27	8.4	1.8
2000	740	69	26	7.9	1.6
1900	703	66	24	7.5	1.3
1800	666	62	23	6.9	1.2
1700	629	59	22	6.5	1.0
1600	592	83	31	10.0	2.4
1500	555	79	29	9.4	2.1
1400	518	74	27	8.7	1.8
1300	481	68	25	7.8	1.5
1200	444	63	23	7.1	1.2
1100	407	58	21	6.3	0.9
1000	370	53	20	5.6	0.7

Note: Maximum operating speed cannot exceed fan wheel mechanical limit.

System Airflow Measurements

Constant Volume Systems

1. Ensure that the "System" selection switch at the remote panel is in the OFF position and the "Fan" selection switch for constant volume units is in the "Auto" position. (VAV units do not use a "Fan" selection input.)

⚠WARNING

Hazardous Voltage!

Disconnect all electric power, including remote disconnects before servicing. Follow proper lockout/tagout procedures to ensure the power can not be inadvertently energized. Failure to disconnect power before servicing could result in death or serious injury.

2. Close the disconnect switch or circuit protector switch that provides supply power to the unit's terminal block 1TB1 or the unit-mounted disconnect switch 1S14.

   HIGH VOLTAGE IS PRESENT AT TERMINAL BLOCK 1TB1 OR UNIT DISCONNECT SWITCH 1S14.

3. Turn the 115 volt control circuit switch 1S1 and the 24 volt control circuit switch 1S70 to the ON position.
4. Open the Human Interface access door, located in the unit control panel, and press the SERVICE MODE key to display the first service screen. Refer to the latest edition of the appropriate programming manual for CV or VAV applications for the SERVICE TEST screens and programming instructions.
5. Use Table 45, p. 96 to program the Supply Fan for operation by scrolling through the displays.
6. Once the configuration for the Fan is complete, press the NEXT key until the LCD displays the "Start test in __Sec." screen. Press the + key to designate the delay before the test is to start. This service test will begin after the TEST START key is pressed and the delay designated in this step has elapsed. Press the ENTER key to confirm this choice.
7. Press the TEST START key to start the test. Remember that the delay designated in step 6 must elapse before the fans will begin to operate.

⚠WARNING

Live Electrical Components!

During installation, testing, servicing and troubleshooting of this product, it may be necessary to work with live electrical components. Have a qualified licensed electrician or other individual who has been properly trained in handling live electrical components perform these tasks. Failure to follow all electrical safety precautions when exposed to live electrical components could result in death or serious injury.

8. With the system in SERVICE MODE and the supply fan rotating in the proper direction, measure the amperage at the supply fan contactor 1K16 & 1K15 (additional contactor for 90 thru 75 ton units). If the amperage exceeds the motor nameplate value, the static pressure is less than design and the airflow is too high. If the amperage is below the motor nameplate value, static pressure may be too high and CFM may be too low.
   To determine the actual CFM (± 5%):
   a. Measure the actual fan RPM
   b. Calculate the Theoretical BHP

   $$\frac{\text{Actual Motor Amps}}{\text{Motor Nameplate Amps}} \text{ X Motor HP}$$

   c. Plot this data onto the appropriate Fan Performance Curve in Figure 64, p. 106. Where the two points intersect, read straight down to the CFM line.

   Use this data to assist in calculating a new fan drive if the CFM is not at design specifications.

   An alternate method with less accuracy is to measure the static pressure drop across the evaporator coil. This can be accomplished by:

   a. Drilling a small hole through the unit casing on each side of the coil.

      Note: Coil damage can occur if care is not taken when drilling holes in this area.

   b. Measure the difference between the pressures at both locations.

c. Plot this value onto the appropriate pressure drop curve in Figure 83. Use the data in Table 50 (Component Static Pressure Drops) to assist in calculating a new fan drive if the CFM is not at design specifications.

d. Plug the holes after the proper CFM is established.

9. To stop the fan operation, press the STOP key at the human interface module in the unit control panel.

VAV Systems with DDP Supply Fan

Supply Airflow Measurement for DDP Fans

Piezometer rings are available on units with DDP fans to measure supply airflow. Piezometer rings can interface with customer-supplied airflow monitoring systems using the K-factors and equation shown below. Connections are located one the fan side of each assembly.

Table 49. Piezometer ring K-factors

Nominal Capacity	K-factor
20, 25 ton	2454
30 ton	3010
40 ton	3701
50, 55 ton	4620
60 ton	6020
70, 75 ton	7402

*Note: If assuming standard air density, obtain the airflow using: CFM = K*SQRT(DP) where DP is the differential pressure (inches w.c.)*

Exhaust Airflow Measurement (Optional with all Units)

⚠WARNING

Hazardous Voltage!

Disconnect all electric power, including remote disconnects before servicing. Follow proper lockout/tagout procedures to ensure the power can not be inadvertently energized. Failure to disconnect power before servicing could result in death or serious injury.

1. Close the disconnect switch or circuit protector switch that provides the supply power to the unit's terminal block 1TB1 or the unit-mounted disconnect switch 1S14.

   HIGH VOLTAGE IS PRESENT AT TERMINAL BLOCK 1TB1 OR UNIT DISCONNECT SWITCH 1S14.

2. Turn the 115 volt control circuit switch 1S1 and the 24 volt control circuit switch 1S70 to the ON position.

3. Open the Human Interface access door, located in the unit control panel, and press the SERVICE MODE key to display the first service screen. Refer to the latest edition of the appropriate programming manual for CV or VAV applications for the SERVICE TEST screens and programming instructions.

4. Use Table 45, p. 96 to program the following system components for operation by scrolling through the displays:
   - Exhaust Fan
   - Exhaust Dampers (100% Open, if applicable)
   - Outside Air dampers (100% Open)
   - Variable Frequency Drive (100%, if applicable)
   - RTM Occ/Unocc Output (Default)

5. Once the configuration for the components is complete, press the NEXT key until the LCD displays the "Start test in __Sec." screen. Press the + key to designate the delay before the test is to start. This service test will begin after the TEST START key is pressed and the delay designated in this step has elapsed. Press the ENTER key to confirm this choice.

6. Press the TEST START key to start the test. Remember that the delay designated in step 5 must elapse before the fans will begin to operate.

⚠WARNING

Live Electrical Components!

During installation, testing, servicing and troubleshooting of this product, it may be necessary to work with live electrical components. Have a qualified licensed electrician or other individual who has been properly trained in handling live electrical components perform these tasks. Failure to follow all electrical safety precautions when exposed to live electrical components could result in death or serious injury.

7. With the exhaust dampers open and the exhaust/return fan operating at full airflow capability, measure amperage at the exhaust fan contactor 1K17. If the amperage exceeds the motor nameplate value, static pressure is less than design and airflow is too high. If the amperage is below the motor nameplate value, static pressure may be too high and CFM may be too low.
   To determine the actual CFM (± 5%):
   a. Measure the actual fan RPM
   b. Calculate the theoretical BHP

$$\frac{\text{Actual Motor Amps}}{\text{Motor Nameplate Amps}} \text{ X Motor HP}$$

   Use Table 53 to Table 55 to calculate a new fan drive if the CFM is not at design specifications.

8. To stop the fan operation, press the STOP key at the human interface module in the unit control panel.

Traq Sensor Airflow Measurement (Optional with all units equipped with economizer)

1. Open the Human Interface access door, located in the unit control panel, and press the SERVICE MODE key to display the first service screen. Refer to the latest edition of the appropriate programming manual for CV or VAV applications for the SERVICE TEST screens and programming instructions.
2. Use Table 45, p. 96 to program the following system components for Economizer operation by scrolling through the displays:
   - Supply Fan (On)
   - Outside Air dampers (Selected % Open)
   - Variable Frequency Drive (100% Output, if applicable)
   - RTM Occ/Unocc Output (Unoccupied)
   - Outside Air CFM Setpoint
   - Outside Air Pre-Heater Operation (if applicable)
3. Once the configuration for the components is complete, press the NEXT key until the LCD displays the "Start test in __Sec." screen. Press the + key to designate the delay before the test is to start. This service test will begin after the TEST START key is pressed and the delay designated in this step has elapsed. Press the ENTER key to confirm this choice.
4. Press the TEST START key to start the test. Remember that the delay designated in step 3 must elapse before the fans will begin to operate.
5. With the unit operating in the TEST MODE, the amount of outside air flowing through the TRAQ sensor can be view by switching to the STATUS MENU screen "OA CFM".
6. Scroll to the "ECONOMIZER ENABLE/ECONOMIZER POSITION" screen by pressing the NEXT key and read the corresponding damper opening percentage (%).
7. Press the STOP key at the human interface module in the unit control panel to stop the unit operation.

Return Plenum Pressure Control (Units equipped with Return Fan)

Determine Return Plenum Pressure Max Setpoint

1. Open the Human Interface access door, located in the unit control panel, and press the SERVICE MODE key to display the first service screen. Refer to the latest edition of the appropriate programming manual for CV or VAV applications for the SERVICE TEST screens and programming instructions.
2. If not already STOPPED, press the STOP key on the Human Interface (HI).
3. Under HI Service Menu, ensure all outputs are OFF or CLOSED.
4. Press the Start Service Test key.
5. Adjust the Exhaust Damper Position to approximately 85%.
6. Start the Supply Fan and Return Fan.
7. Adjust the Supply Fan and Return Fan speeds to 100%.
8. Slowly adjust the Outside Air Damper to approximately 100%.
9. While measuring the building static pressure, slowly adjust the Return Fan Speed down until the building pressure reaches design conditions.
10. Make note of the return plenum pressure reading on the HI.
11. Set the "Return Plenum Pressure Max Setpoint" parameter on the HI to the value noted in the previous step.

"OA Normalization" Determination (Units equipped with TRAQ):

1. Perform a normal airflow balance of the unit.
2. Ensure that Exhaust Damper is approximately 85%, the Supply Fan and Return Fan speed is 100%, and the Outdoor Air Damper is approximately 100%.
3. Make note of the total TRAQ airflow reading on the Human Interface (HI).
4. Set the "OA Normalization" parameter on the HI to the value noted in the previous step.

Fan Performance Tables

Figure 64. Supply fan performance with or without variable frequency drive—20 and 25 ton air-cooled, 24 and 29 ton evaporative condensing—forward curved

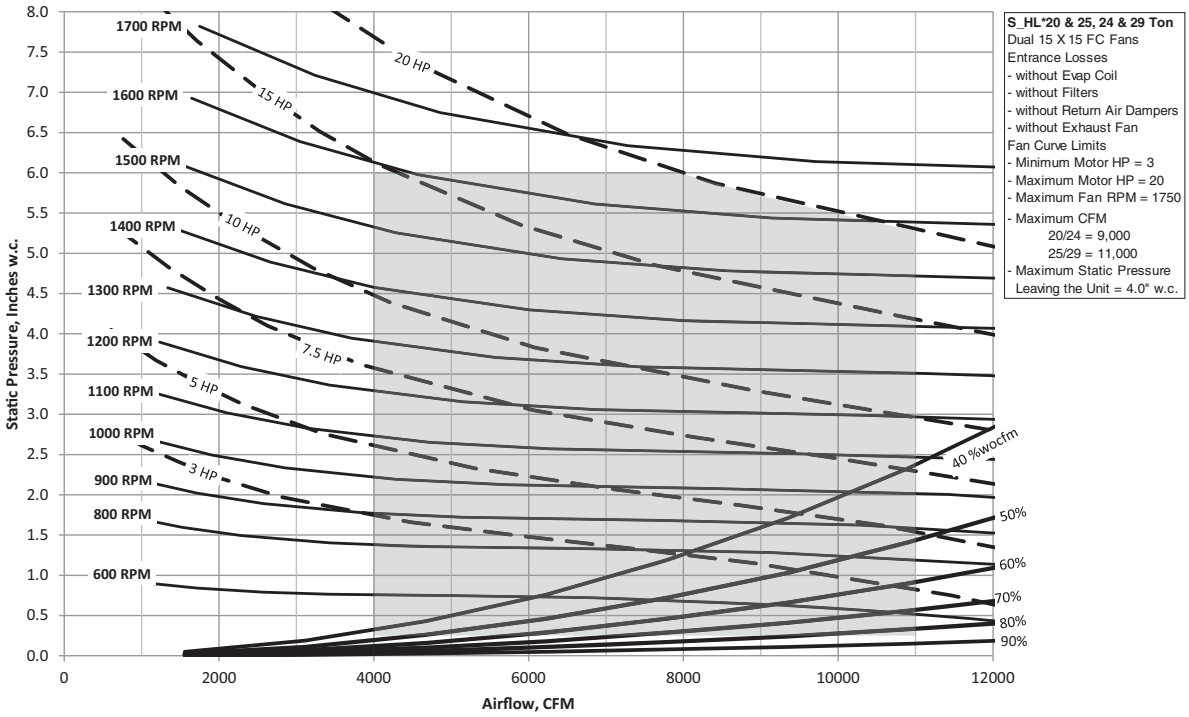

Figure 65. Supply fan performance with variable frequency drive—20 and 25 ton air-cooled, 24 and 29 ton evaporative condensing—direct drive plenum, 80% width

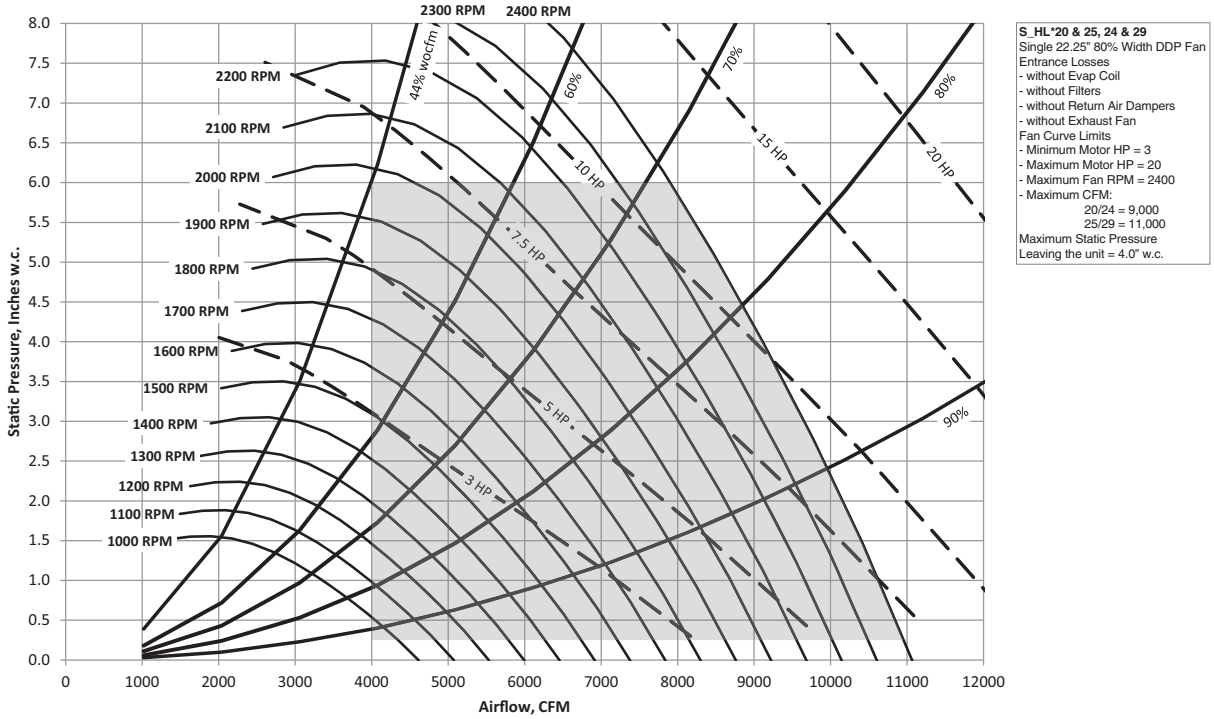

Figure 66. Supply fan performance with variable frequency drive—20 and 25 ton air-cooled, 24 and 29 ton evaporative condensing—direct drive plenum, 120% width

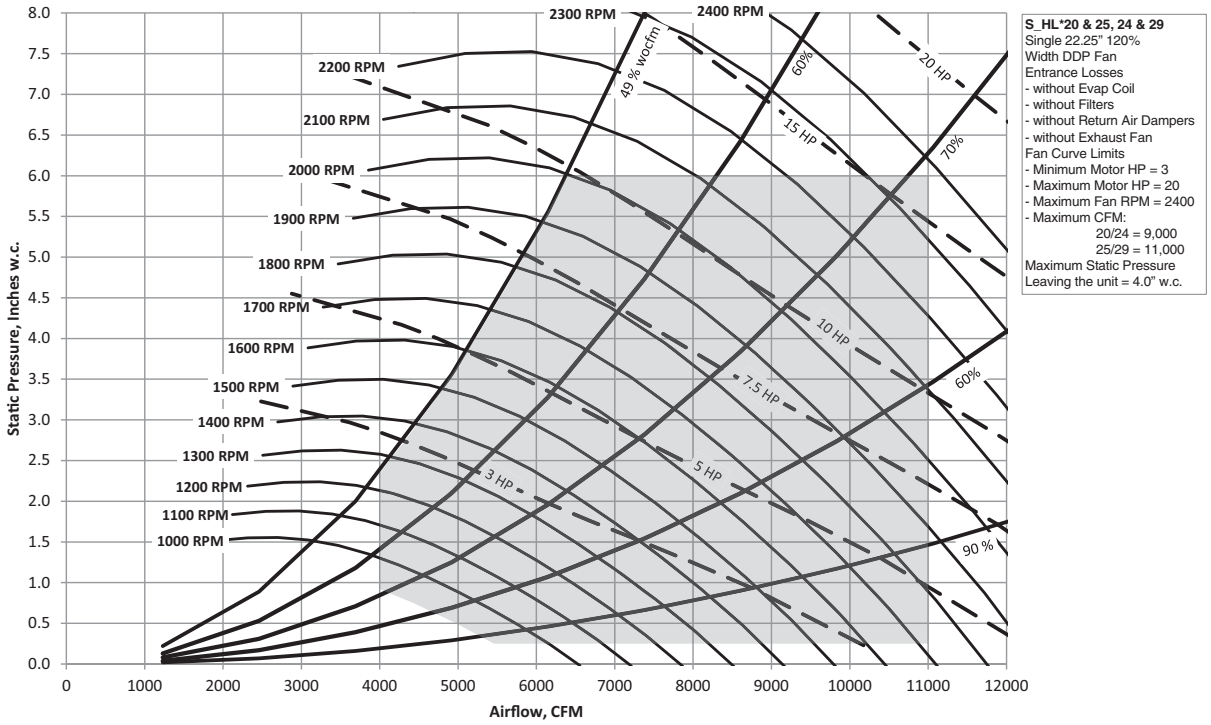

Figure 67. Supply fan performance with or without variable frequency drive — 30 ton air-cooled, 36 ton evaporative condensing—forward curved

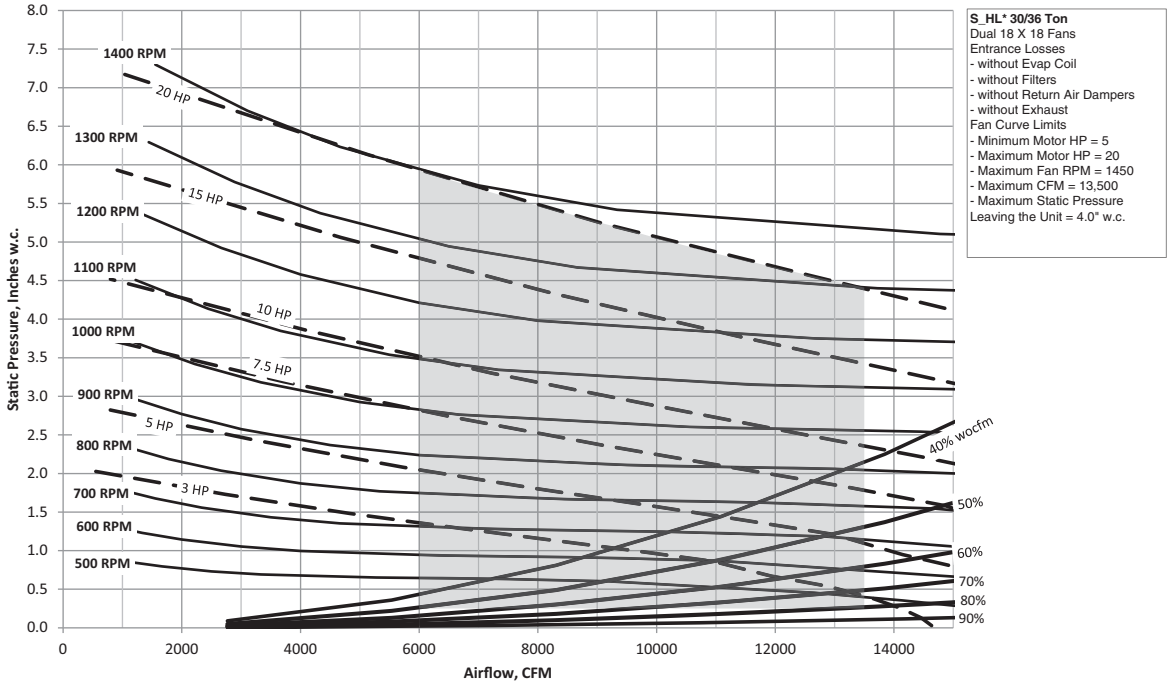

Figure 68. Supply fan performance with variable frequency drive — 30 ton air-cooled, 36 ton evaporative condensing—direct drive plenum, 80% width

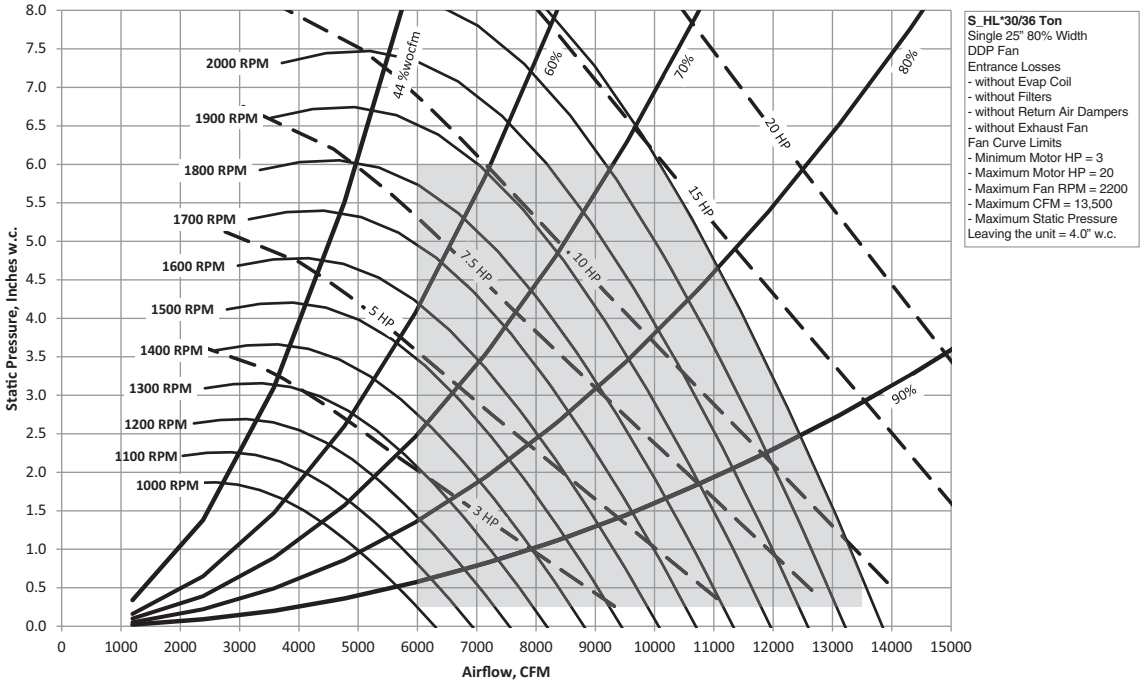

Figure 69. Supply fan performance with variable frequency drive — 30 ton air-cooled, 36 ton evaporative condensing—direct drive plenum, 120% width

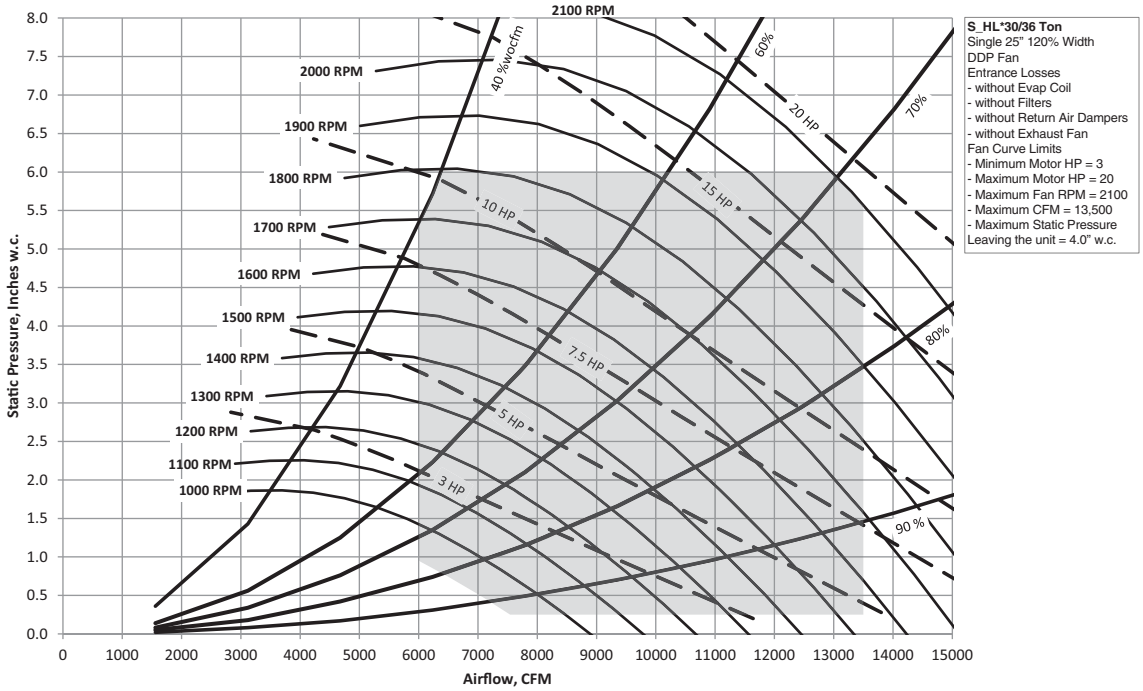

Figure 70. Supply fan performance with or without variable frequency drive—40, 50, and 55 ton air-cooled, 48 and 59 ton evaporative condensing—forward curved

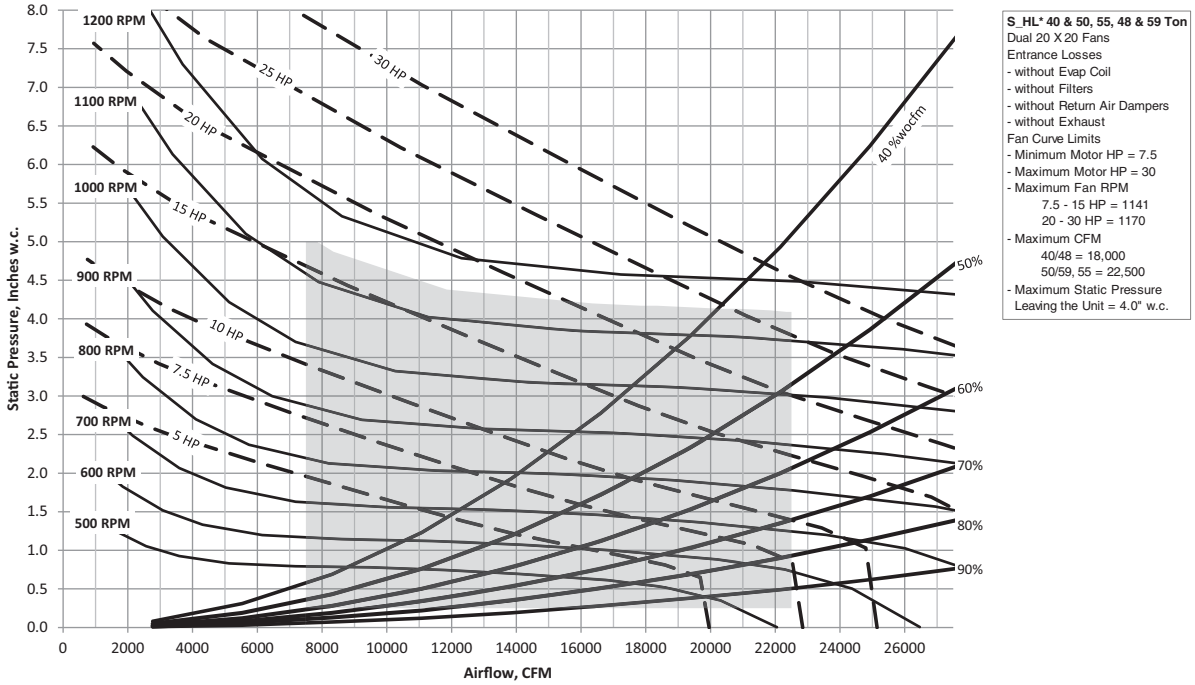

Figure 71. Supply fan performance with variable frequency drive—40 ton air-cooled, 48 ton evaporative condensing—direct drive plenum, 80% width

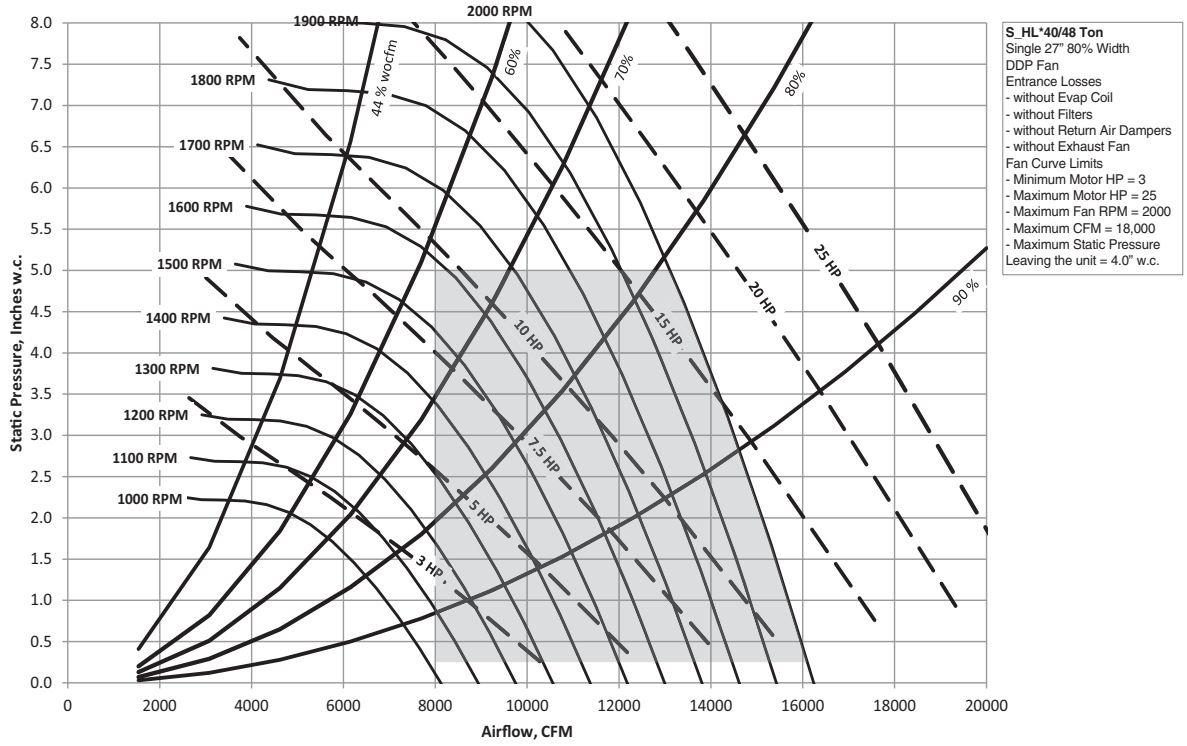

Figure 72. Supply fan performance with variable frequency drive—40 ton air-cooled, 48 ton evaporative condensing—direct drive plenum, 120% width

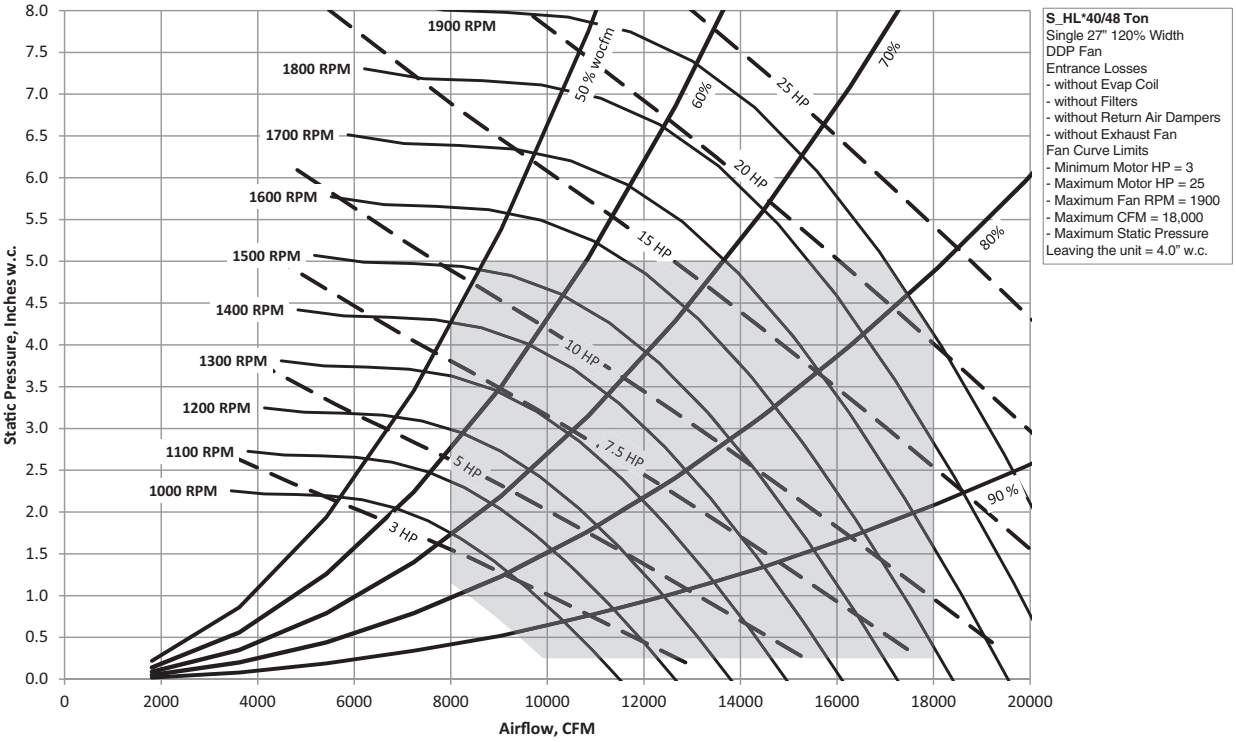

Figure 73. Supply fan performance with variable frequency drive—50, 55 ton air-cooled, 59 ton evaporative condensing—direct drive plenum, 80% width

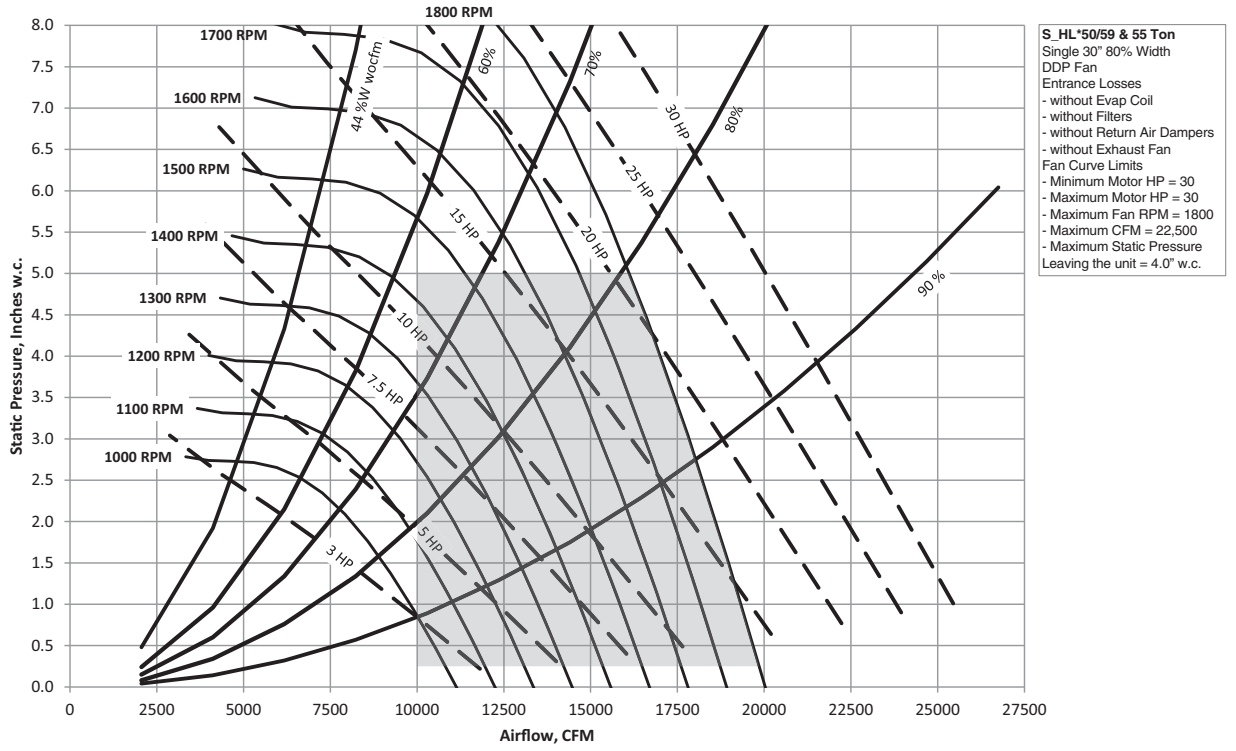

Figure 74. Supply fan performance with variable frequency drive—50, 55 ton air-cooled, 59 ton evaporative condensing—direct drive plenum, 100% width

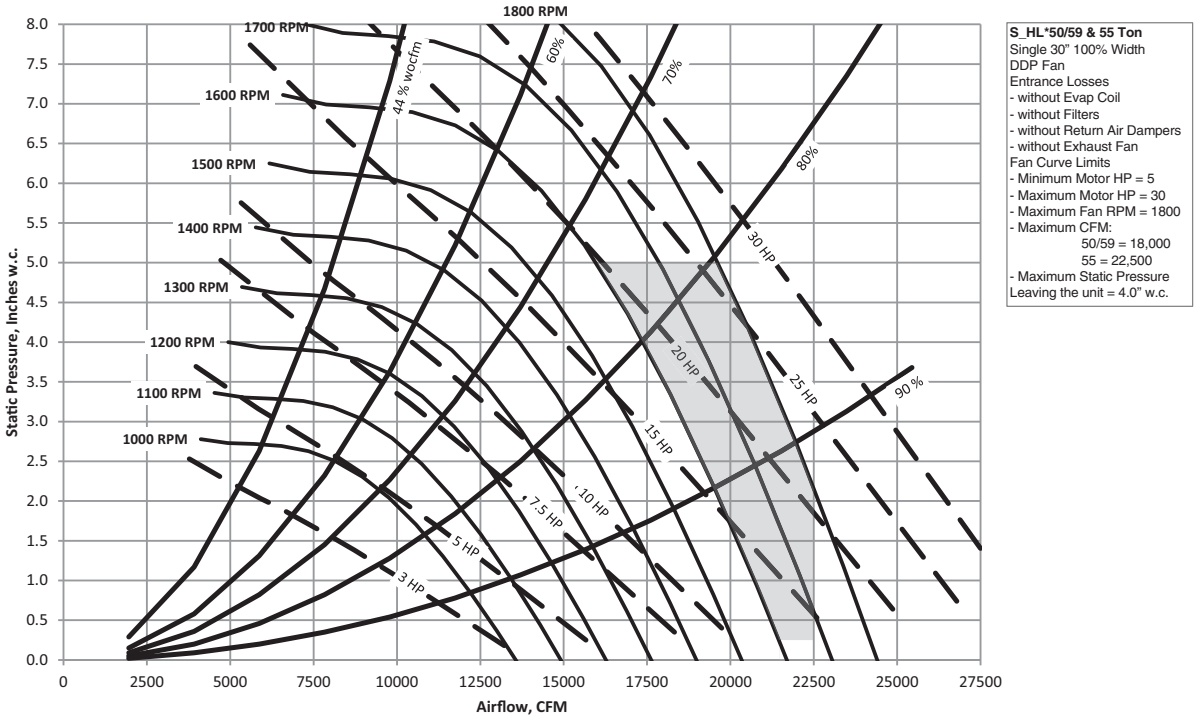

Figure 75. Supply fan performance with variable frequency drive—50, 55 ton air-cooled, 59 ton evaporative condensing—direct drive plenum, 120% width

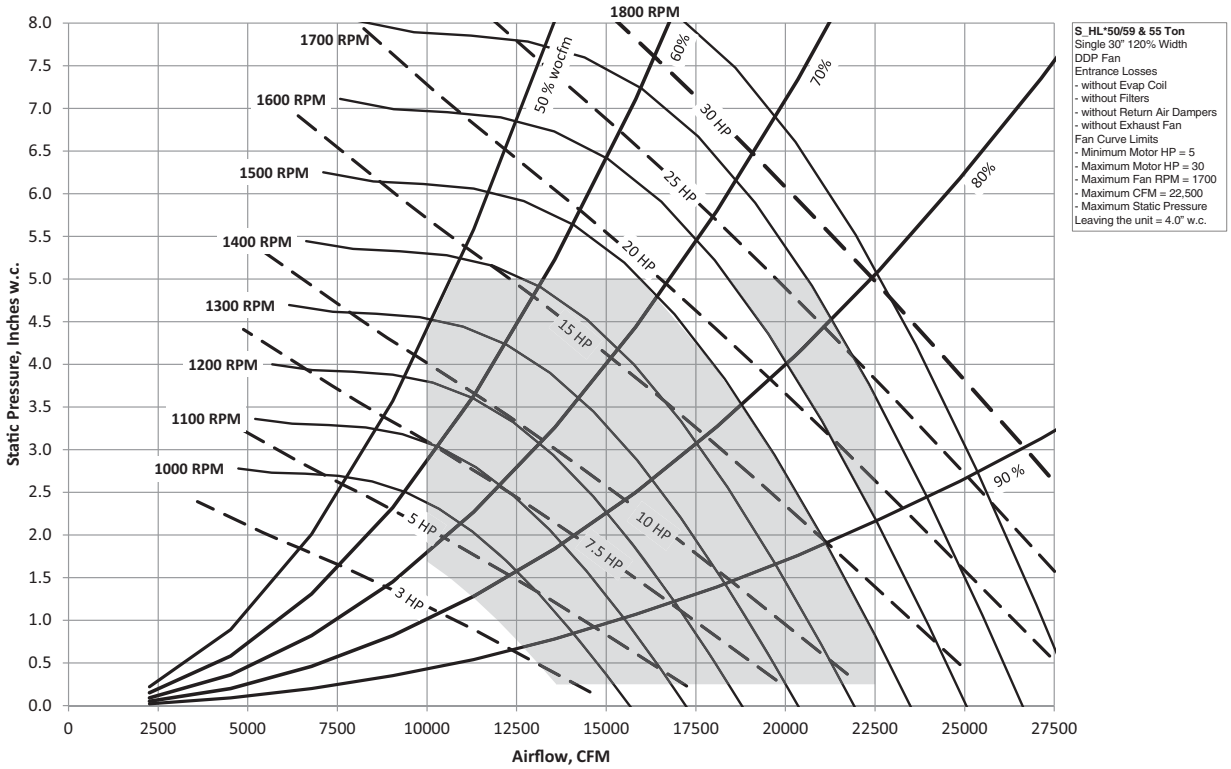

Figure 76. Supply fan performance with or without variable frequency drive—60, 70, and 75 ton air-cooled, 73, 80, and 89 ton evaporative condensing—forward curved

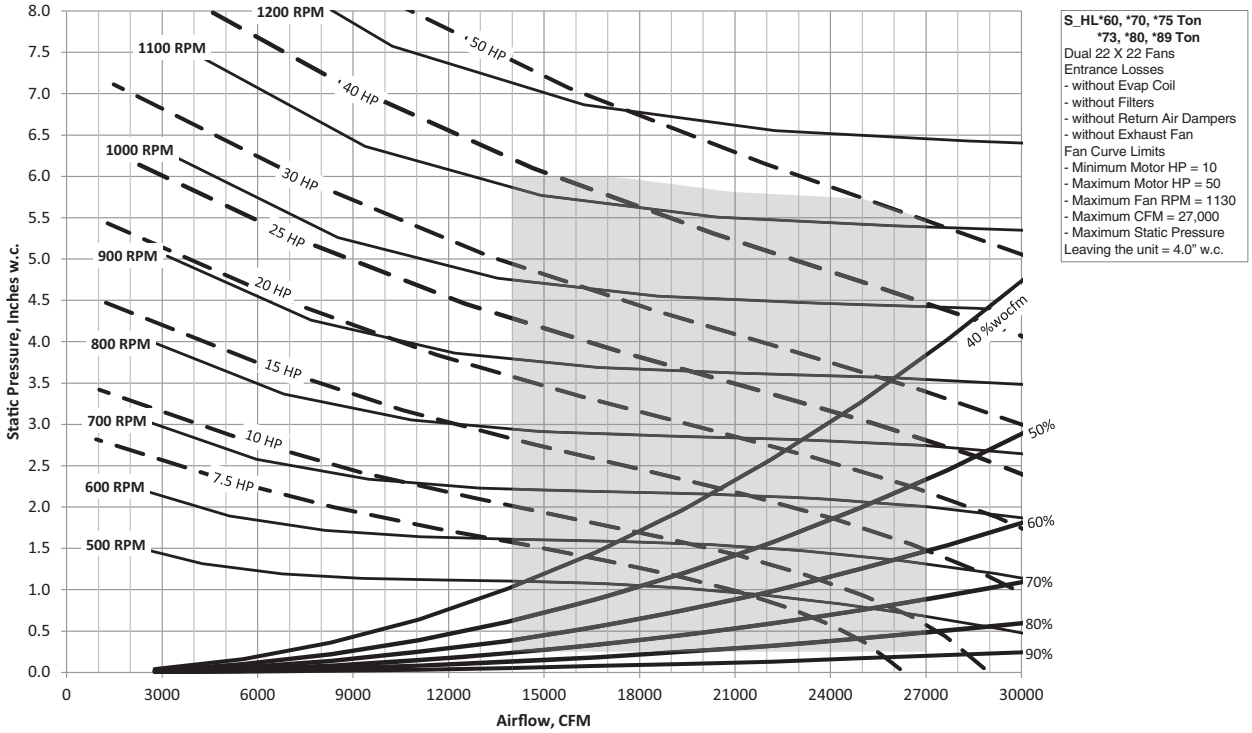

Figure 77. Supply fan performance with variable frequency drive—60 ton air-cooled, 73 ton evaporative condensing—direct drive plenum, 80% width

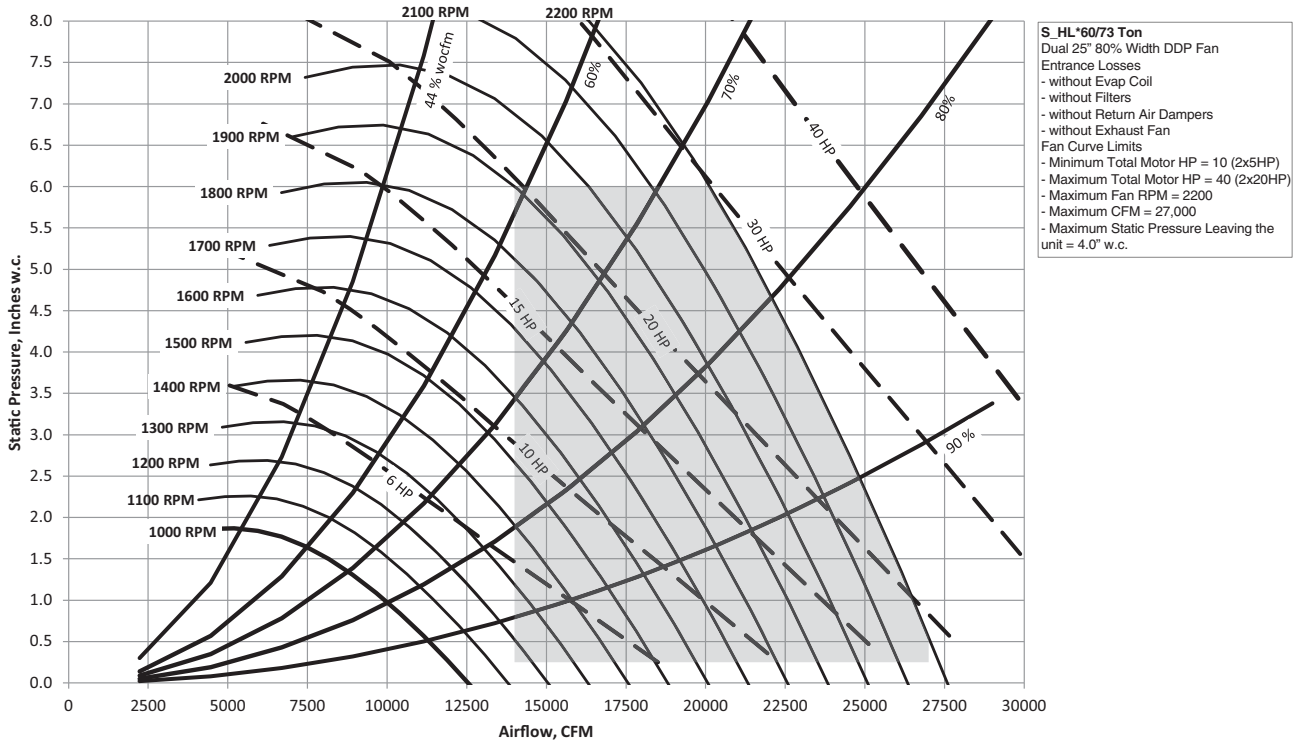

Figure 78. Supply fan performance with variable frequency drive—60 ton air-cooled, 73 ton evaporative condensing—direct drive plenum, 120% width

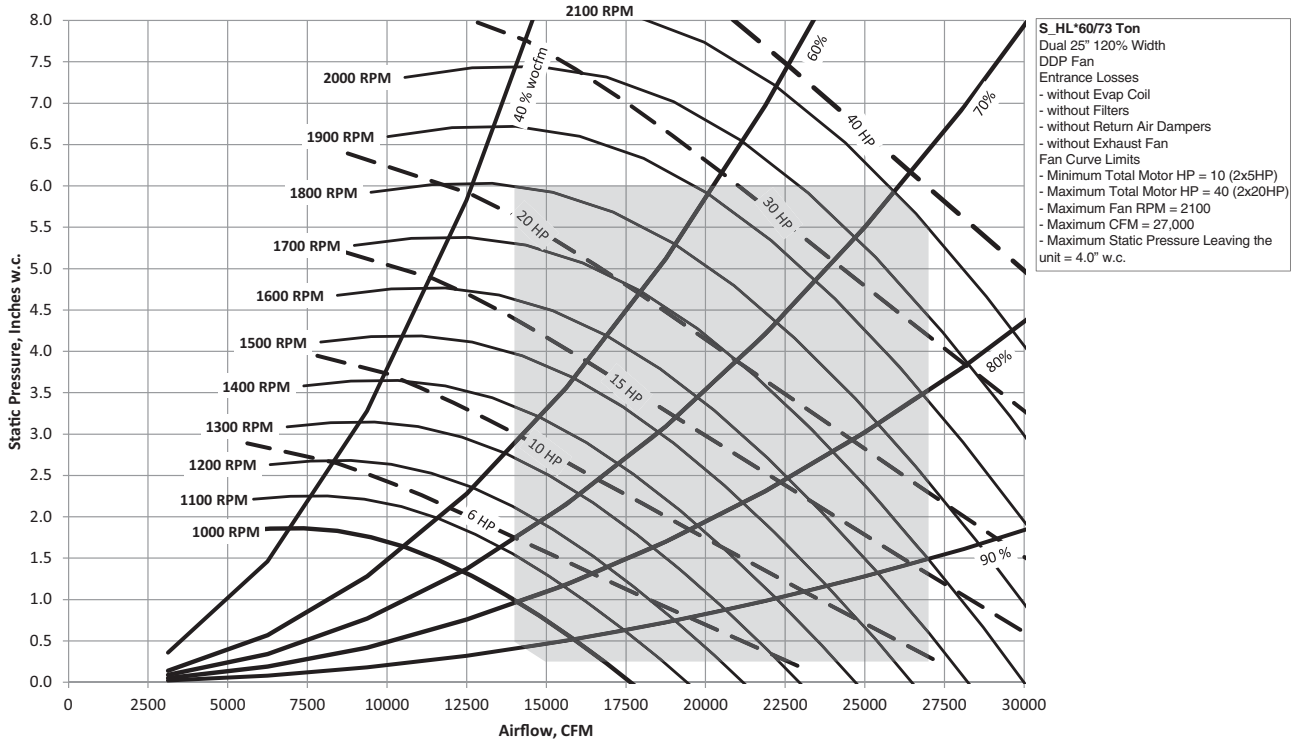

Figure 79. Supply fan performance with variable frequency drive—70 and 75 ton air-cooled, 80 and 89 ton evaporative condensing—direct drive plenum, 80% width

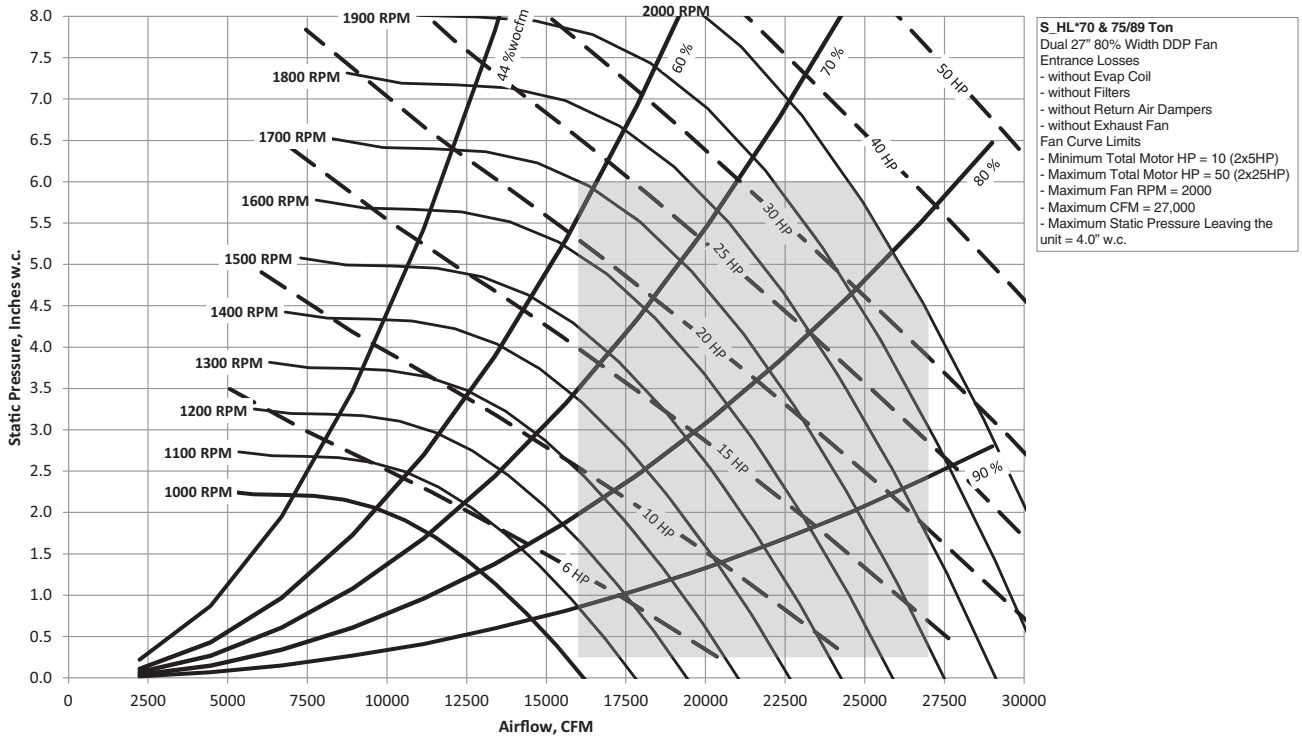

Figure 80. Supply fan performance with variable frequency drive—70 and 75 ton air-cooled, 80 and 89 ton evaporative condensing—direct drive plenum, 120% width

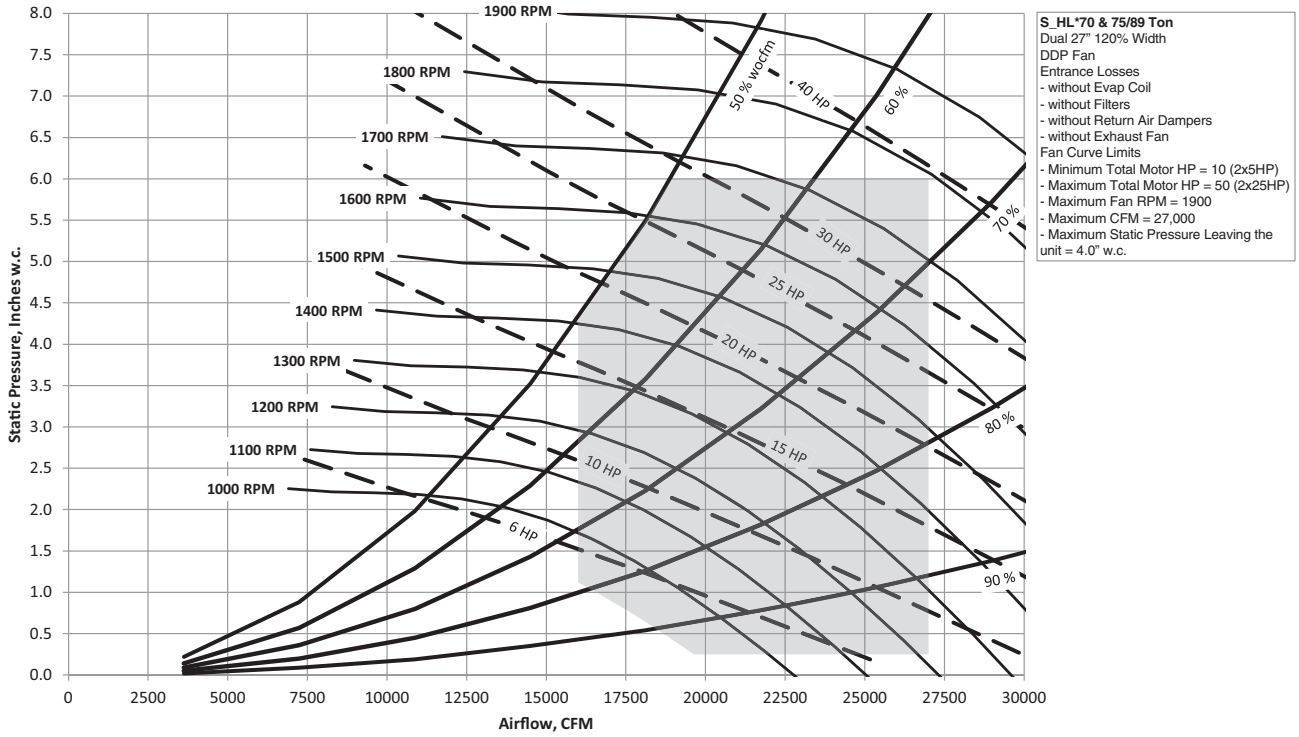

Figure 81. Supply fan performance with or without variable frequency drive—90 ton air-cooled

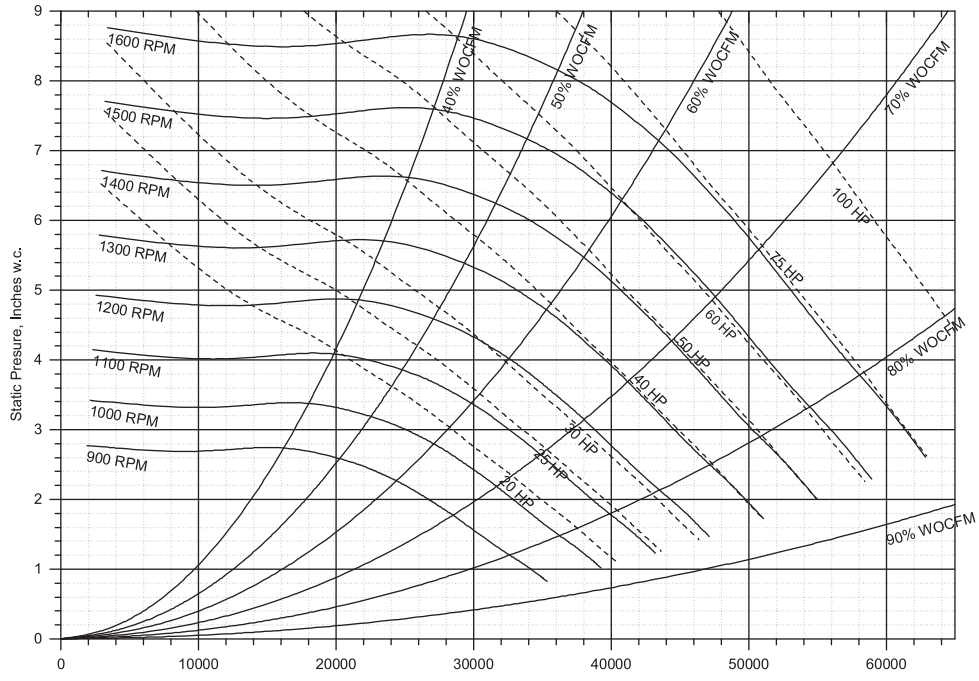

Figure 82. Supply fan performance with or without variable frequency drive—105, 115, 130 ton air-cooled

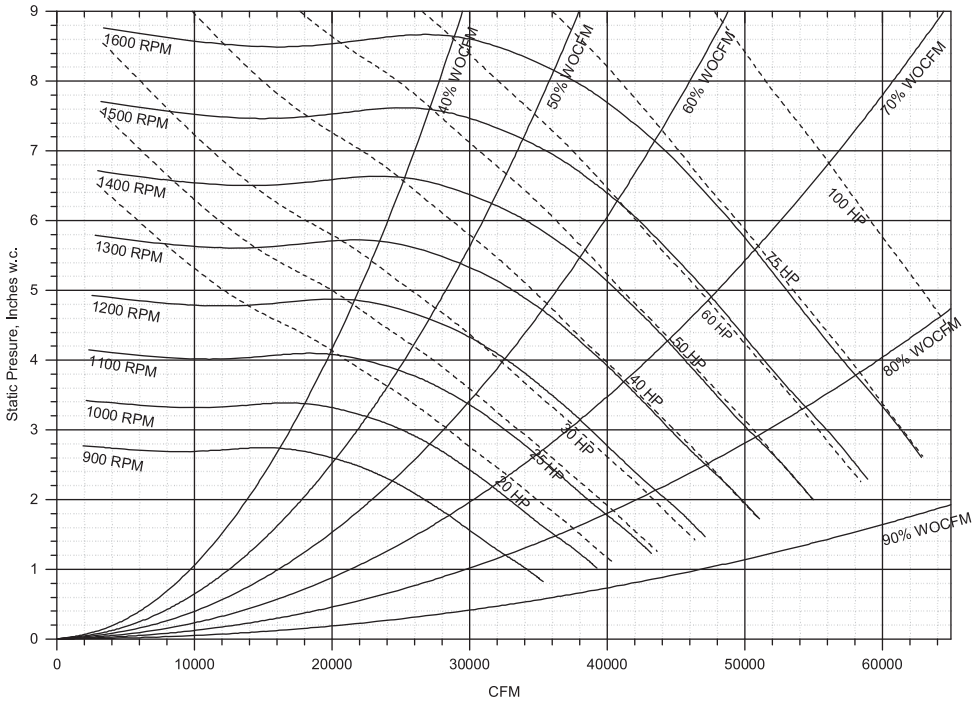

Pressure Drop Tables

Figure 83. Wet airside pressure drop at 0.075 lb/cu.ft. 20 to 89 ton evaporator coil

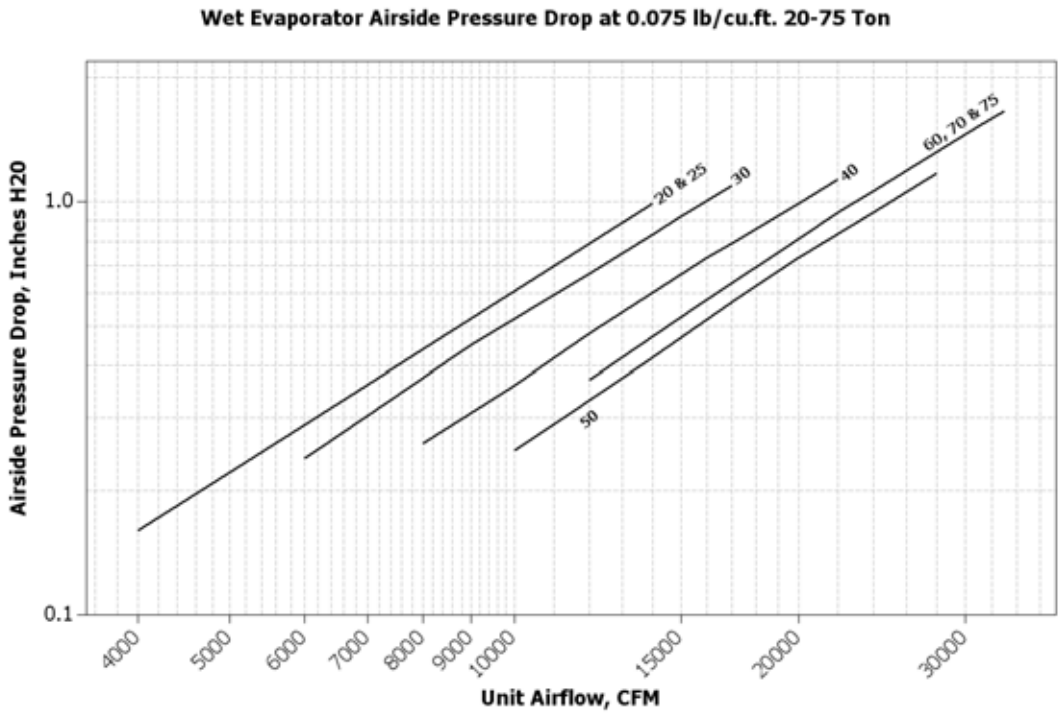

Figure 84. Dry airside pressure drop at 0.075 lb/cu.ft. 20 to 89 ton evaporator coil

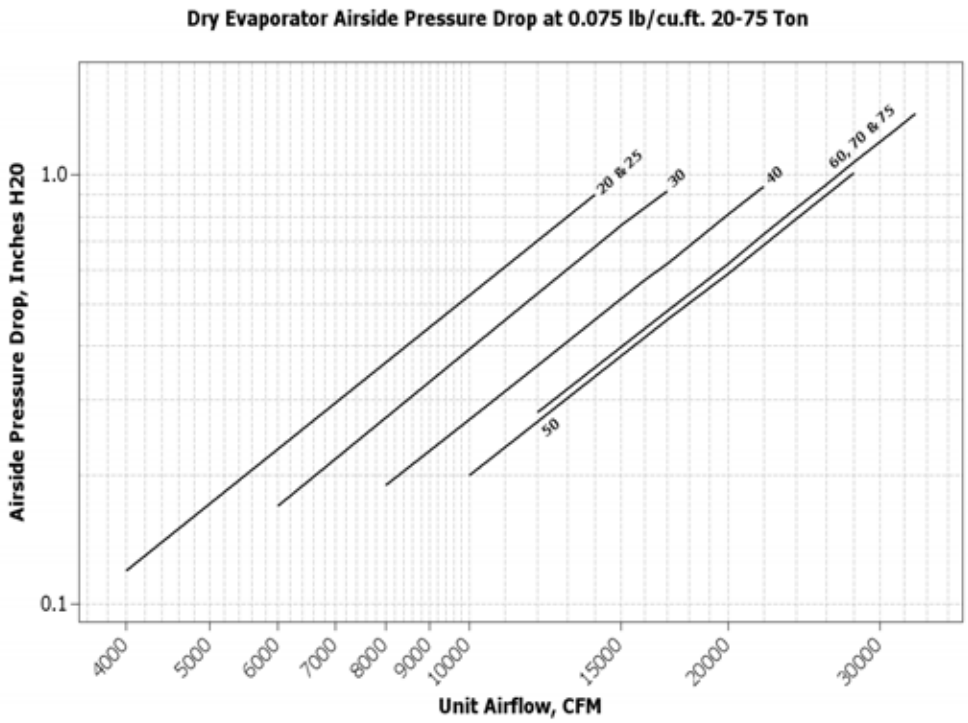

Figure 85. Wet airside pressure drop at 0.075 lb/cu.ft. 90 to 130 ton evaporator coil

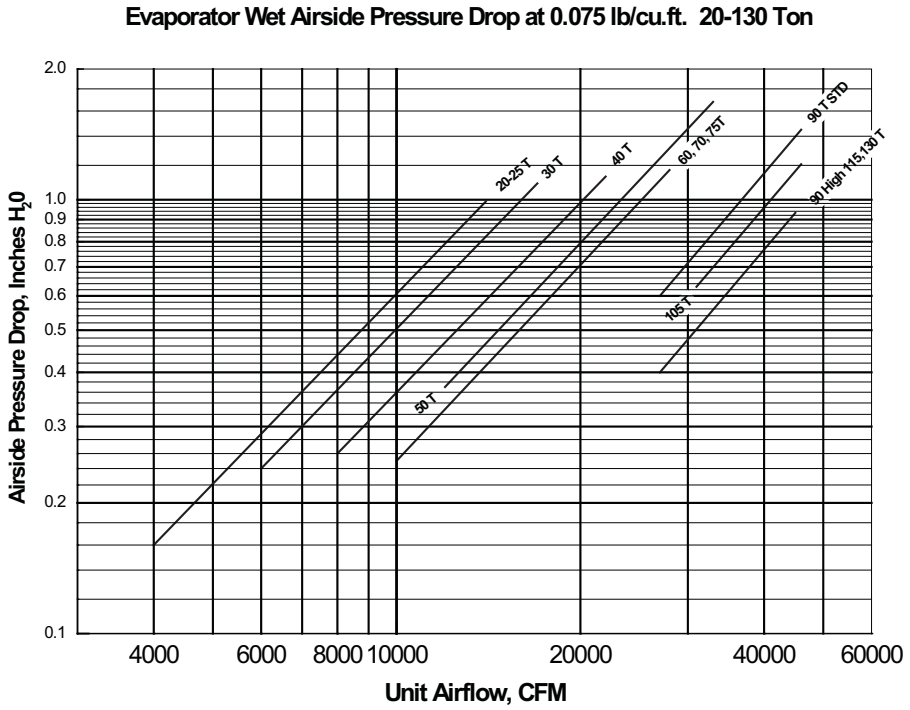

Figure 86. Dry airside pressure drop at 0.075 lb/cu.ft. 90 to 130 ton evaporator coil

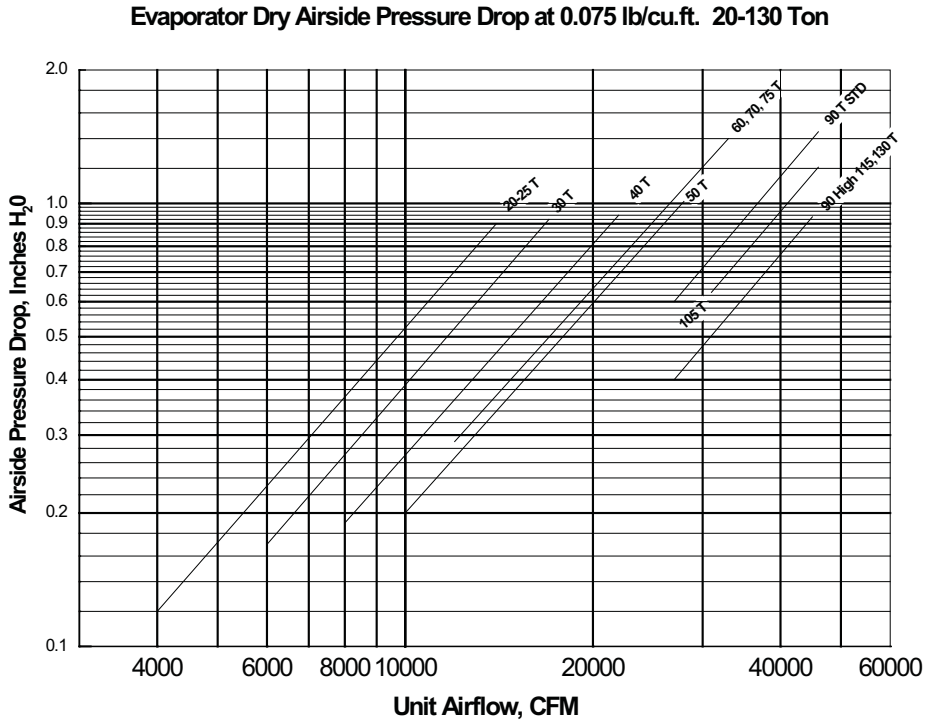

Table 50. Component static pressure drops (in. W.G.)

Nom (AC/ EC)	CFM Std	Evaporator Coil		Heating System							Filters						Std Roof	Reheat Option Pressure Drop
				SFHL		SEHL	SLHL		SSHL		Throwaway		Perm Wire	Bag & Prefilter	Cartridge & Prefilter	Final Filter Cartridge		
		Dry	Wet	Low	High	All kW	Low	High	Low	High	Std.	High						
20/24	4000	0.12	0.16	.02	N/A	0.02	.05	.06	.02	.06	.03	.03	.01	.3	.24	0.22	.01	0.01
	6000	0.24	0.29	.05	.05	0.04	.09	.12	.05	.12	.06	.06	.02	.5	.44	0.30	.02	0.02
	8000	0.37	0.44	.09	.09	0.07	.15	.19	.10	.20	.09	.09	.03	.71	.68	0.45	.05	0.04
	9000	0.45	0.52	.12	.12	0.09	.19	.24	.12	.22	.11	.11	.04	.83	.81	0.55	.07	0.05
	10000	0.53	0.6	.14	.15	0.11	.23	.28	.15	.29	.13	.13	.05	.95	.95	0.66	.10	0.06
	12000	0.7	0.78	.20	.22	0.17	.33	.40	.22	.42	.15	.15	.06	1.19	1.26	0.94	.14	0.08
25/29	5000	0.18	0.22	.03	N/A	0.03	.07	.09	.04	.09	.05	.05	.02	.40	.34	0.25	.01	0.01
	6000	0.24	0.29	.05	.05	0.04	.10	.12	.06	.13	.07	.07	.02	.50	.44	0.30	.02	0.02
	7500	0.34	0.41	.08	.08	0.06	.14	.17	.09	.18	.09	.09	.03	.66	.62	0.41	.04	0.03
	10000	0.53	0.62	.14	.15	0.11	.23	.28	.15	.29	.13	.13	.05	.95	.95	0.66	.10	0.06
	11000	0.62	0.71	.17	.18	0.13	.29	.33	.19	.35	.15	.15	.06	1.06	1.11	0.79	.12	0.07
	12500	0.75	0.85	.22	.23	0.18	.33	.42	.24	.42	.19	.19	.08	1.29	1.34	1.02	.19	0.09
	14000	0.9	0.99	.28	.29	0.21	.41	.53	.30	.53	.24	.24	.10	-	-	1.28	.24	0.11
30/36	6000	0.17	0.24	.05	.05	0.04	.09	.12	.05	.12	.04	.04	.01	.34	.26	0.24	.02	0.02
	9000	0.33	0.45	.11	.12	0.09	.19	.24	.12	.22	.07	.07	.02	.54	.48	0.36	.07	0.04
	12000	0.53	0.67	.20	.21	0.16	.31	.39	.22	.41	.11	.11	.04	.75	.75	0.58	.16	0.07
	14000	0.68	0.83	.26	.29	0.22	.40	.51	.30	.50	.14	.14	.06	.95	.95	0.76	.25	0.09
	15000	0.76	0.92	.30	.33	0.25	.45	.57	.33	.52	.16	.16	.07	1.03	1.06	0.87	.30	0.11
	17000	0.92	1.09	.39	.42	0.35	.58	.73	.42	.67	.21	.21	.09	1.20	1.30	1.11	.39	0.14
40/48	8000	0.19	0.26	.09	N/A	0.07	.09	.11	.05	.11	.04	.04	.02	.37	.31	0.25	.01	0.02
	10000	0.27	0.36	.14	.11	0.11	.13	.16	.08	.16	.06	.06	.02	.49	.43	0.32	.02	0.03
	12000	0.36	0.48	.20	.15	0.16	.17	.22	.11	.21	.08	.08	.03	.61	.56	0.41	.04	0.05
	16000	0.57	0.73	.34	.26	0.29	.28	.36	.20	.36	.12	.12	.05	.88	.87	0.66	.10	0.08
	17000	0.62	0.79	N/A	.29	0.32	.31	.39	.22	.41	.13	.13	.06	.95	.95	0.74	.12	0.10
	20000	0.81	0.99	N/A	.41	0.44	.42	.52	.30	.51	.17	.17	.08	1.17	1.22	1.02	.19	0.13
	22000	0.94	1.13	N/A	.50	0.53	.51	.63	.36	.62	.21	.21	.10	-	-	1.23	.23	0.16
50/55/ 59	10000	0.2	0.25	.12	.10	0.11	.13	.16	.07	.15	.04	.04	.01	.37	.30	0.25	.03	0.03
	14000	0.34	0.42	.26	.20	0.22	.22	.28	.15	.28	.07	.07	.03	.56	.50	0.37	.07	0.05
	17000	0.46	0.57	.39	.29	0.32	.31	.40	.22	.41	.10	.10	.04	.72	.68	0.50	.12	0.08
	20000	0.59	0.73	.58	.41	0.44	.42	.52	.30	.51	.12	.12	.05	.88	.88	0.66	.19	0.11
	24000	0.79	0.94	.73	.58	0.62	.48	.72	.45	.75	.16	.16	.07	1.11	1.17	0.94	.30	0.15
	28000	1.01	1.17	.99	.79	0.84	.62	.98	.61	.99	.20	.20	.10	-	-	1.28	.39	0.21
60/73	12000	0.27	0.37	.10	.08	0.06	.10	.13	.06	.11	.05	.05	.01	.44	.37	0.27	.02	0.03
	16000	0.43	0.58	.18	.14	0.11	.17	.21	.11	.19	.07	.07	.02	.63	.58	0.39	.05	0.06
	20000	0.62	0.8	.27	.21	0.17	.24	.31	.16	.27	.10	.10	.03	.84	.82	0.56	.10	0.09
	24000	0.83	1.03	.40	.30	0.24	.33	.42	.22	.39	.11	.11	.04	1.06	1.08	0.78	.16	0.13
	28000	1.06	1.28	.48	.33	0.32	.44	.55	.32	.50	.17	.17	.06	1.22	1.29	1.05	.30	0.17
	30000	1.19	1.41	.62	.38	0.37	.51	.63	.37	.57	.20	.20	.07	-	-	1.21	.34	0.20
70/80	12000	0.28	0.37	.10	.08	0.06	.10	.13	.06	.11	.05	.05	.01	.44	.37	0.27	.02	0.03
	16000	0.44	0.58	.18	.14	0.11	.17	.21	.11	.19	.07	.07	.02	.63	.58	0.39	.05	0.06
	20000	0.62	0.81	.27	.21	0.17	.24	.31	.16	.27	.10	.10	.03	.84	.82	0.56	.10	0.09
	22000	0.73	0.94	.33	.25	0.2	.29	.37	.19	.33	.12	.12	.04	.95	.95	0.66	.13	0.11
	24000	0.84	1.06	.40	.30	0.24	.33	.42	.22	.39	.14	.14	.04	1.06	1.08	0.78	.16	0.13
	26000	0.95	1.19	.47	.32	0.28	.39	.49	.27	.45	.16	.16	.05	1.17	1.23	0.91	.23	0.15
	28000	1.07	1.32	.54	.33	0.32	.44	.55	.32	.50	.17	.17	.06	1.22	1.29	1.05	.30	0.17
	31000	1.26	1.52	.60	.40	0.4	.49	.61	.39	.55	.21	.21	.07	-	-	1.29	.37	0.21
	33000	1.39	1.66	.65	.46	0.45	.52	.67	.44	.60	.24	.24	.08	-	-	1.47	.42	0.24

continued on next page

Table 50. Component static pressure drops (in. W.G.) (continued)

Nom (AC/ EC)	CFM Std	Evaporator Coil		Heating System							Filters						Std Roof	Reheat Option Pressure Drop
				SFHL		SEHL	SLHL		SSHL		Throwaway		Perm Wire	Bag & Prefilter	Cartridge & Prefilter	Final Filter Cartridge		
		Dry	Wet	Low	High	All kW	Low	High	Low	High	Std.	High						
75/89	12000	0.28	0.38	.10	.08	0.06	.10	.13	.06	.11	.05	.05	.01	.44	.37	0.27	.02	0.03
	16000	0.44	0.58	.18	.14	0.11	.17	.21	.11	.19	.07	.07	.02	.63	.58	0.39	.05	0.06
	20000	0.63	0.82	.27	.21	0.17	.24	.31	.16	.27	.10	.10	.03	.84	.82	0.56	.10	0.09
	22000	0.73	0.94	.33	.25	0.2	.29	.37	.19	.33	.12	.12	.04	.95	.95	0.66	.13	0.11
	24000	0.84	1.07	.40	.30	0.24	.33	.42	.22	.39	.14	.14	.04	1.06	1.08	0.78	.16	0.13
	26000	0.95	1.2	.47	.32	0.28	.39	.49	.27	.45	.16	.16	.05	1.17	1.23	0.91	.23	0.15
	28000	1.07	1.33	.54	.33	0.32	.44	.55	.32	.50	.17	.17	.06	1.22	1.29	1.05	.30	0.17
	31000	1.27	1.54	.60	.40	0.4	.49	.61	.39	.55	.21	.21	.07	-	-	1.29	.37	0.21
	33000	1.4	1.68	.65	.46	0.45	.52	.67	.44	.60	.24	.24	.08	-	-	1.47	.42	0.24

Notes:
1. Static pressure drops of accessory components must be added to external static pressure to enter fan selection tables.
2. Gas heat section maximum temperature rise of 60 F.
3. Throwaway filter option limited to 300 ft/min face velocity.
4. Bag filter option limited to 740 ft/min face velocity.
5. Horizontal roof curbs assume 0.50" static pressure drop or double the standard roof curb pressure drop, whichever is greater.
6. No additional pressure loss for model SXHL.
7. For final filters w/ prefilters (digit 13 = M, N, P, Q) also add pressure drop for throwaway filter.

Table 51. Component static pressure drops, 90-130 ton (in. W.G.)

Nom	Cfm Std	Evaporator Coil		High Cap Evap		Heating System							Filters					Std Roof	Econ. w/ or w/out Exhaust
						SFHL		SEHL	SLHL		SSHL		Throwaway		Perm Wire	Bag and Prefilter	Cartridge and Prefilter		
		Dry	Wet	Dry	Wet	Low	High	All kW	Low	High	Low	High	Std.	High					
90	27000	0.40	0.53	0.60	0.80	-	0.25	0.13	0.26	0.31	0.22	0.32	0.11	0.13	-	0.68	0.65	-	0.2
	32000	0.53	0.70	0.80	1.03	-	0.31	0.16	0.35	0.41	0.3	0.43	0.14	0.16	-	0.84	0.84	-	0.31
	37000	0.67	0.88	1.01	1.32	-	0.39	0.23	0.45	0.52	0.4	0.55	0.17	0.19	-	1.02	1.04	-	0.41
	42000	0.83	1.08	1.25	1.62	-	0.46	0.29	0.56	0.65	0.5	0.68	0.21	0.22	-	1.19	1.06	-	0.52
	45000	0.93	1.20	1.40	1.80	-	0.52	0.32	0.63	0.73	0.58	0.76	0.24	0.24	-	-	-	-	0.63
105	31000	-	-	0.63	0.83	-	0.28	0.17	0.33	0.39	0.29	0.4	-	0.13	-	0.82	0.8	-	0.22
	35000	-	-	0.77	1.01	-	0.36	0.21	0.41	0.48	0.36	0.5	-	0.16	-	0.96	0.96	-	0.32
	39000	-	-	0.92	1.20	-	0.42	0.26	0.49	0.57	0.44	0.6	-	0.19	-	1.09	1.12	-	0.44
	43000	-	-	1.08	1.40	-	0.45	0.3	0.57	0.66	0.53	0.71	-	0.22	-	1.22	1.3	-	0.54
	46000			1.21	1.56	-	0.55	0.34	0.65	0.75	0.61	0.79	-	0.24	-		-	-	0.64
115/ 130	31000	0.76	1.00	-	-	-	0.28	0.17	0.33	0.39	0.29	0.4	-	0.13	-	0.82	0.8	-	0.22
	35000	0.92	1.21	-	-	-	0.36	0.21	0.41	0.48	0.36	0.5	-	0.16	-	0.96	0.96	-	0.32
	39000	1.10	1.44	-	-	-	0.42	0.26	0.49	0.57	0.44	0.6	-	0.19	-	1.09	1.12	-	0.44
	43000	1.30	1.68	-	-	-	0.45	0.3	0.57	0.66	0.53	0.71	-	0.22	-	1.22	1.3	-	0.54
	46000	1.45	1.86	-	-	-	0.55	0.34	0.65	0.75	0.61	0.79	-	0.24	-	-	-	-	0.64

Notes:
1. Static pressure drops of accessory components must be added to external static pressure to enter fan selection tables.
2. Gas heat section maximum temperature rise of 60 F.
3. Throwaway filter option limited to 300 ft/min face velocity.
4. Bag filter option limited to 740 ft/min face velocity.
5. Horizontal roof curbs assume 0.50" static pressure drop or double the standard roof curb pressure drop, whichever is greater.
6. No additional pressure loss for model SXHF.

Table 52. Component static pressure drops (in. W.G.)—exhaust damper for return fan

Nom Tons (AC/EC)	Cfm	Exhaust Damper for Return Fan
20/24	4000	0.08
	6000	0.19
	8000	0.35
	9000	0.44
	10000	0.55
	12000	0.79
25/29	5000	0.13
	6000	0.19
	7500	0.3
	10000	0.55
	11000	0.67
	12500	0.85
	14000	1.08
30/36	6000	0.19
	9000	0.44
	12000	0.79
	14000	1.08
	15000	1.2
	17000	1.6
40/48	8000	0.18
	10000	0.28
	12000	0.41
	16000	0.73
	17000	0.82
	20000	1.15
	22000	1.39
50/55/59	10000	0.28
	14000	0.56
	17000	0.75
	20000	1.15
	24000	1.66
	28000	2.26
60/73	12000	0.31
	16000	0.56
	20000	0.88
	24000	1.27
	28000	1.73
	30000	1.99
70/80	12000	0.31
	16000	0.56
	20000	0.88
	22000	1.05
	24000	1.27
	26000	1.47
	28000	1.73
	31000	-
	33000	-
75/89	12000	0.31
	16000	0.56
	20000	0.88
	22000	1.05
	24000	1.27
	26000	1.47
	28000	1.73
	31000	-
	33000	-

Notes:
1. Exhaust Damper drop is only added when Return Fan is ordered.
2. Use Return CFM for exhaust damper drop add on return fan selections.

Table 53. 20 to 89 tons—modulating 100% exhaust fan performance

Nominal Tons (AC/EC)	Cfm Std Air	Negative Static Pressure 0.250 RPM	0.250 BHP	0.500 RPM	0.500 BHP	0.750 RPM	0.750 BHP	1.000 RPM	1.000 BHP	1.250 RPM	1.250 BHP	1.500 RPM	1.500 BHP	1.750 RPM	1.750 BHP	2.000 RPM	2.000 BHP
20/24	4000	379	0.34	515	0.70	622	1.12	712	1.59	791	2.10	861	2.64				
	6000	421	0.61	541	1.03	643	1.52	732	2.07	811	2.66						
	8000	487	1.10	583	1.56	674	2.11	757	2.72								
	10000	567	1.88	643	2.37	719	2.96										
25/29	4000	379	0.34	515	0.70	622	1.12	712	1.59	791	2.10	861	2.64	927	3.22	988	3.84
	6000	421	0.61	541	1.03	643	1.52	732	2.07	811	2.66	882	3.28	948	3.94	1010	4.64
	8000	487	1.10	583	1.56	674	2.11	757	2.72	834	3.38	904	4.09	970	4.82		
	10000	567	1.88	643	2.37	719	2.96	794	3.63	864	4.35						
	12000	651	2.98	716	3.56	779	4.18	843	4.88								
30/36	4000	379	0.34	515	0.70	622	1.12	712	1.59	791	2.10	861	2.64	927	3.22	988	3.84
	6000	421	0.61	541	1.03	643	1.52	732	2.07	811	2.66	882	3.28	948	3.94	1010	4.64
	8000	487	1.10	583	1.56	674	2.11	757	2.72	834	3.38	904	4.09	970	4.82	1030	5.59
	10000	567	1.88	643	2.37	719	2.96	794	3.63	864	4.35	931	5.11	993	5.91	1053	6.77
	12000	651	2.98	716	3.56	779	4.18	843	4.88	905	5.64	967	6.47	1026	7.34		
	14000	736	4.47	796	5.17	850	5.83	904	6.57	960	7.38						
40/48	7500	318	0.67	444	1.21	545	1.85	629	2.54	702	3.27	767	4.02	828	4.83	884	5.66
	9000	331	0.97	444	1.47	543	2.17	628	2.94	702	3.75	770	4.60	831	5.48	887	6.37
	12000	381	2.13	460	2.40	546	3.04	627	3.89	701	4.83	769	5.82	831	6.87	889	7.93
	14000	422	3.40	486	3.49	557	3.98	631	4.76	701	5.72	768	6.78	830	7.90	888	9.07
	16000	468	5.12	520	5.07	579	5.37	643	6.01	707	6.88	769	7.92	829	9.08	887	10.32
50/59	9000	331	0.97	444	1.47	543	2.17	628	2.94	702	3.75	770	4.60	831	5.48	887	6.37
	12000	381	2.13	460	2.40	546	3.04	627	3.89	701	4.83	769	5.82	831	6.87	889	7.93
	15000	445	4.20	502	4.21	567	4.61	636	5.32	704	6.26	769	7.32	830	8.47	888	9.67
	18000	516	7.41	559	7.19	609	7.32	662	7.76	719	8.49	776	9.44	833	10.56	887	11.79
	20000	566	10.31	602	9.91	644	9.88	690	10.15	739	10.69	789	11.48	841	12.48	893	13.68
60/73 70/80 75/89	12000	351	1.49	423	2.09	502	3.00	572	4.02	634	5.07	690	6.09	740	7.04	784	7.91
	15000	412	2.68	460	3.15	521	3.96	585	5.02	646	6.24	702	7.53	749	8.83	801	10.14
	18000	478	4.41	516	4.88	557	5.54	607	6.49	662	7.66	715	9.01	766	10.48	814	12.01
	21000	549	6.75	578	7.36	612	7.92	647	8.71	688	9.77	735	11.03	781	12.46	827	14.03
	24000	617	9.83	644	10.59	672	11.22	702	11.88	732	12.77	766	13.89	805	15.22	846	16.72
	27000	688	15.11	711	15.09	736	15.45	761	16.18	788	17.02	815	17.92	844	18.99	876	20.31

Note: Shaded areas indicate non-standard drive selections. These drive selections must be manually factory selected.

Table 54. 90 to130 tons modulating 100% exhaust fan performance

Nominal Tons	Cfm Std Air	Negative Static Pressure 0.250 RPM	0.250 BHP	0.500 RPM	0.500 BHP	0.750 RPM	0.750 BHP	1.000 RPM	1.000 BHP	1.250 RPM	1.250 BHP	1.500 RPM	1.500 BHP	1.750 RPM	1.750 BHP	2.000 RPM	2.000 BHP	2.250 RPM	2.250 BHP	2.500 RPM	2.500 BHP
90-130	28000	495	12.81	519	13.30	547	13.93	582	15.27	619	17.14	655	18.85	689	20.51	721	22.51	750	24.43	777	26.28
	30000	527	15.67	550	16.22	573	16.71	604	17.84	637	19.53	672	21.63	705	23.38	737	25.16	768	27.31	795	29.37
	32000	559	18.92	581	19.53	602	20.03	628	20.90	658	22.39	690	24.39	723	26.63	753	28.44	784	30.37	811	32.54
	34000	591	22.60	612	23.28	632	23.84	653	24.48	681	25.74	710	27.55	739	29.75	771	32.16	799	34.04	828	36.04
	36000	623	26.73	643	27.47	662	28.09	680	28.62	705	29.66	732	31.25	759	33.29	788	35.76	817	38.26	844	40.23
	38000	656	31.34	675	32.14	693	32.83	710	33.42	730	34.17	755	35.51	780	37.38	806	39.60	834	42.26	861	44.90
	40000	688	36.46	707	37.31	724	38.07	741	38.73	757	39.29	779	40.45	804	42.09	827	44.14	853	46.63	879	49.41

Notes:

1. Shaded areas indicate non-standard drive selections. These drive selections must be manually factory selected.
2. Refer to General Data Table for minimum and maximum hp's.

Table 55. 20 to 89 tons—50% exhaust fan performance

Nominal Tons (AC/EC)	Cfm Std Air	Negative Static Pressure (In. W.G.) 0.200 RPM	0.200 BHP	0.400 RPM	0.400 BHP	0.600 RPM	0.600 BHP	0.800 RPM	0.800 BHP	1.000 RPM	1.000 BHP	1.200 RPM	1.200 BHP	1.400 RPM	1.400 BHP
20/24 25/29	2000	346	0.14	465	0.27	560	0.43	641	0.60	712	0.79	776	1.00	836	1.21
	3000	397	0.27	495	0.42	583	0.61	662	0.81	731	1.03	795	1.27	854	1.51
	4000	469	0.51	546	0.68	621	0.88	691	1.11	757	1.36	818	1.62	876	1.90
	5000	548	0.88	613	1.08	675	1.30	736	1.55	794	1.81	850	2.10	903	2.39
	6000	630	1.40	690	1.66	742	1.90	793	2.16	844	2.45	894	2.75	943	3.06
30/36	2000	346	0.14	465	0.27	560	0.43	641	0.60	712	0.79	776	1.00	836	1.21
	3000	397	0.27	495	0.42	583	0.61	662	0.81	731	1.03	795	1.27	854	1.51
	4000	469	0.51	546	0.68	621	0.88	691	1.11	757	1.36	818	1.62	876	1.90
	5000	548	0.88	613	1.08	675	1.30	736	1.55	794	1.81	850	2.10	903	2.39
	6000	630	1.40	690	1.66	742	1.90	793	2.16	844	2.45	894	2.75	943	3.06
	7000	714	2.10	769	2.42	818	2.72	862	3.00	906	3.29	950	3.61	993	3.95
40/48 50/59	3000	281	0.20	396	0.39	486	0.60	560	0.83	625	1.07	683	1.33	737	1.61
	5000	326	0.55	404	0.73	485	0.99	559	1.29	627	1.61	687	1.94	741	2.28
	7000	411	1.35	459	1.51	513	1.74	571	2.04	629	2.39	686	2.77	740	3.18
	9000	508	2.80	540	2.92	578	3.13	618	3.40	662	3.72	706	4.09	751	4.50
	11000	609	5.05	633	5.16	661	5.34	691	5.58	723	5.87	756	6.21	792	6.59
60/73 70/80 75/89	4000	271	0.29	364	0.54	438	0.82	499	1.07	550	1.30	601	1.56	651	1.87
	6000	339	0.71	391	0.90	456	1.22	517	1.60	572	2.01	622	2.43	668	2.85
	8000	425	1.55	460	1.73	497	1.96	542	2.30	591	2.72	639	3.20	684	3.73
	10000	517	2.88	543	3.13	571	3.34	600	3.59	632	3.94	649	4.37	707	4.87
	12000	612	4.84	651	5.15	655	5.43	678	5.68	702	5.95	726	6.29	752	6.71
	13000	659	6.09	679	6.44	699	6.76	720	7.04	741	7.31				

Note: Shaded areas indicate non-standard drive selections. These drive selections must be manually factory selected.

Table 56. 90 to 130 Tons—50% exhaust fan performance

Nominal Tons (AC/EC)	CFM Std Air	Negative Static Pressure (In. W.G.) 0.250 RPM	0.250 BHP	0.500 RPM	0.500 BHP	0.750 RPM	0.750 BHP	1.000 RPM	1.000 BHP	1.250 RPM	1.250 BHP	1.500 RPM	1.500 BHP	1.750 RPM	1.750 BHP	2.000 RPM	2.000 BHP	2.250 RPM	2.250 BHP	2.500 RPM	2.500 BHP
	12000	432	4.09	461	4.31	502	4.86	545	5.67	585	6.35	622	7.19	655	7.99	686	8.78	717	9.57	748	10.48
	14000	495	6.40	519	6.65	547	6.96	582	7.64	619	8.57	655	9.42	689	10.26	721	11.26	750	12.21	777	13.14
90-130	16000	559	9.46	581	9.77	602	10.02	628	10.45	658	11.20	690	12.19	723	13.32	753	14.22	784	15.18	811	16.27
	18000	623	13.36	643	13.73	662	14.05	680	14.31	705	14.83	732	15.63	759	16.65	788	17.88	817	19.13	844	20.12
	20000	688	18.23	707	18.66	724	19.03	741	19.36	757	19.65	779	20.22	804	21.04	827	22.07	853	23.31	879	24.70

Note: Shaded areas indicate non-standard drive selections. These drive selections must be manually factory selected.

Table 57. Return fan performance—20, 25, 30 tons AC; 24, 29, 36 tons EC (24.5")

CFM Std. Air	Negative Static Pressure 0.25 RPM	0.25 BHP	0.50 RPM	0.50 BHP	0.75 RPM	0.75 BHP	1.00 RPM	1.00 BHP	1.25 RPM	1.25 BHP	1.50 RPM	1.50 BHP	1.75 RPM	1.75 BHP	2.00 RPM	2.00 BHP
4000	557	0.29	638	0.48	710	0.68	776	0.89	838	1.10	899	1.32	969	1.60	1038	1.89
4500	605	0.36	682	0.57	749	0.79	811	1.02	869	1.25	926	1.49	980	1.73	1033	1.99
5000	654	0.44	727	0.67	790	0.91	850	1.16	905	1.41	957	1.67	1007	1.93	1057	2.20
5500	704	0.53	773	0.79	834	1.04	889	1.30	943	1.58	992	1.86	1040	2.15	1087	2.44
6000	756	0.64	821	0.92	879	1.20	932	1.47	982	1.77	1030	2.06	1076	2.38	1121	2.70
6500	808	0.76	868	1.06	925	1.36	976	1.66	1024	1.97	1070	2.29	1114	2.61	1157	2.95
7000	861	0.90	917	1.21	972	1.55	1021	1.87	1067	2.19	1112	2.53	1154	2.87	1195	3.22
7500	913	1.06	968	1.39	1019	1.74	1068	2.10	1112	2.44	1155	2.79	1196	3.15	1235	3.51
8000	967	1.24	1019	1.58	1068	1.96	1115	2.34	1158	2.71	1199	3.08	1238	3.45	1277	3.84
8500	1021	1.44	1071	1.80	1116	2.19	1162	2.60	1204	3.00	1244	3.39	1283	3.79	1320	4.19
9000	1075	1.67	1123	2.04	1166	2.45	1210	2.88	1252	3.30	1290	3.72	1327	4.14	1363	4.56
9500	1130	1.92	1175	2.31	1217	2.73	1258	3.17	1299	3.62	1337	4.07	1373	4.52	1408	4.96
10000	1186	2.20	1228	2.60	1269	3.04	1307	3.50	1347	3.97	1384	4.45	1419	4.91	1454	5.38
10500	1241	2.50	1280	2.92	1321	3.37	1357	3.85	1395	4.34	1432	4.85	1466	5.33	1500	5.84
11000	1297	2.84	1334	3.27	1373	3.74	1409	4.23	1443	4.74	1480	5.26	1515	5.79	1546	6.29
11500	1353	3.20	1387	3.64	1425	4.13	1460	4.64	1493	5.16	1528	5.71	1561	6.25	1594	6.79
12000	1408	3.60	1441	4.06	1477	4.56	1512	5.08	1544	5.62	1576	6.18	1610	6.75	1642	7.32
12500	1464	4.03	1496	4.50	1530	5.01	1565	5.56	1596	6.11	1626	6.68	1658	7.28	1689	7.87
13000	1520	4.49	1551	4.98	1583	5.51	1617	6.06	1648	6.64	1677	7.22	1707	7.84	1737	8.44
13500	1576	4.99	1606	5.50	1636	6.03	1669	6.60	1700	7.20	1728	7.80	1756	8.42	1785	9.06
14000	1633	5.52	1661	6.05	1690	6.60	1721	7.19	1752	7.79	1780	8.42	1807	9.05	1834	9.70

Notes:
1. Max fan RPM 1715 for 24.5" Class I Fan
2. Max motors available are as follows: 20T: 3HP, 25T: 5HP, 30T: 7.5 HP
3. Max CFM available is as follows: 20T: 9000, 25T: 11000, & 30T: 13500
4. Min CFM is 4000 for 20T, 25T, & 30T
5. Return fan belt drive RPM selections will be available to cover 500-1600 RPM range +/- 50 RPM
6. Performance data includes cabinet and rain hood effect. Damper pressure drop must be added to the return duct static per Table 52, p. 120
7. Shaded area indicates nonstandard BHP or RPM selections. Contact a local Trane representative for more information.

Table 58. Return fan performance—40, 50, 55 tons AC; 48, 59 tons EC (27")

CFM	Negative Static Pressure															
Std.	0.25		0.50		0.75		1.00		1.25		1.50		1.75		2.00	
Air	RPM	BHP	RPM	BHP	RPM	BHP	RPM	BHP	RPM	BHP	RPM	BHP	RPM	BHP	RPM	BHP
7500	709	0.82	766	1.16	815	1.50	861	1.85	906	2.22	949	2.60	991	2.99	1033	3.39
8000	748	0.95	803	1.31	851	1.67	895	2.04	938	2.43	979	2.82	1018	3.22	1058	3.64
8500	788	1.09	840	1.47	887	1.86	930	2.24	971	2.64	1010	3.05	1049	3.48	1087	3.92
9000	827	1.24	878	1.64	924	2.05	965	2.46	1005	2.88	1043	3.31	1080	3.75	1115	4.19
9500	867	1.41	916	1.83	961	2.27	1001	2.70	1040	3.14	1076	3.58	1112	4.03	1146	4.50
10000	908	1.60	955	2.04	999	2.50	1038	2.95	1075	3.41	1111	3.88	1145	4.34	1179	4.83
10500	948	1.81	994	2.27	1036	2.75	1075	3.23	1111	3.70	1145	4.18	1179	4.68	1212	5.18
11000	989	2.04	1033	2.51	1074	3.01	1112	3.51	1147	4.01	1181	4.51	1213	5.02	1245	5.53
11500	1030	2.28	1072	2.78	1112	3.29	1149	3.82	1184	4.33	1216	4.86	1248	5.38	1279	5.92
12000	1071	2.55	1112	3.06	1151	3.59	1187	4.14	1221	4.69	1253	5.24	1284	5.78	1314	6.33
12500	1112	2.83	1152	3.37	1189	3.92	1225	4.48	1258	5.06	1290	5.62	1320	6.19	1349	6.76
13000	1153	3.14	1192	3.70	1228	4.27	1263	4.86	1296	5.45	1327	6.04	1356	6.63	1385	7.23
13500	1194	3.47	1232	4.05	1267	4.63	1301	5.24	1333	5.85	1364	6.47	1393	7.08	1421	7.70
14000	1236	3.83	1272	4.42	1307	5.03	1340	5.66	1371	6.29	1401	6.94	1430	7.57	1457	8.20
14500	1277	4.21	1313	4.82	1346	5.45	1379	6.10	1410	6.75	1439	7.42	1467	8.08	1494	8.73
15000	1319	4.62	1353	5.25	1386	5.90	1417	6.55	1448	7.23	1477	7.92	1504	8.61	1531	9.29
15500	1361	5.05	1394	5.71	1426	6.37	1457	7.05	1486	7.74	1514	8.44	1542	9.16	1569	9.87
16000	1402	5.51	1435	6.18	1466	6.87	1496	7.57	1525	8.28	1553	9.01	1580	9.74	1606	10.47
16500	1444	6.00	1476	6.69	1506	7.40	1535	8.12	1564	8.85	1591	9.58	1617	10.34	1643	11.10
17000	1486	6.52	1517	7.23	1547	7.96	1575	8.70	1603	9.44	1629	10.20	1655	10.97	1681	11.75
17500	1528	7.07	1558	7.80	1587	8.55	1615	9.30	1642	10.07	1668	10.85	1694	11.64	1718	12.43
18000	1570	7.65	1599	8.40	1627	9.17	1655	9.94	1681	10.73	1707	11.53	1732	12.33	1757	13.15
18500	1612	8.26	1640	9.03	1668	9.81	1695	10.62	1721	11.43	1746	12.23	1771	13.07	1794	13.89
19000	1654	8.91	1682	9.70	1709	10.50	1735	11.31	1760	12.14	1785	12.97	1809	13.82	1833	14.67
19500	1696	9.59	1723	10.40	1749	11.22	1775	12.06	1800	12.90	1825	13.76	1848	14.62	1872	15.50
20000	1738	10.30	1765	11.13	1790	11.97	1816	12.83	1840	13.69	1864	14.56	1888	15.46	1910	16.34
20500	1780	11.05	1806	11.90	1831	12.76	1856	13.63	1880	14.52	1903	15.41	1926	16.31	1949	17.22
21000	1822	11.84	1848	12.71	1872	13.59	1897	14.48	1920	15.39	1943	16.29	1966	17.23	1988	18.14
21500	1864	12.66	1889	13.55	1914	14.45	1937	15.36	1960	16.29	1983	17.22	2005	18.16	2027	19.11
22000	1899	13.05	1926	14.11	1952	15.16	1977	16.20	2001	17.23	2024	18.24	2047	19.27	2069	20.28
22500	1941	13.91	1967	14.98	1992	16.05	2017	17.12	2041	18.19	2064	19.23	2086	20.27	2108	21.31

Notes:
1. Max fan RPM 1981 For 27" Class II Fan
2. Max Motor Available 15 HP For 27" Fan Size
3. Max motors Available are as follows: 40T: 10 HP & 50/55T: 15 HP
4. Max CFM is as follows: 40T: 18000, 50/55T: 22500)
5. Min CFM is as follows: 40T: 7500 & 50/55T: 9000
6. Return fan belt drive RPM selections will be available to cover 700-1900 RPM range +/- 50 RPM
7. Performance data includes cabinet and rain hood effect. Damper pressure drop will have to be added to the return duct static per Table 52, p. 120
8. Shaded area indicates nonstandard BHP or RPM selections. Contact a local Trane representative for more information.

Table 59. Return fan performance—60, 70, 75 tons AC; 73, 80, 89 tons EC (36.5" fan)

CFM	Negative Static Pressure															
Std.	0.25		0.50		0.75		1.00		1.25		1.50		1.75		2.00	
Air	RPM	BHP	RPM	BHP	RPM	BHP	RPM	BHP	RPM	BHP	RPM	BHP	RPM	BHP	RPM	BHP
12000	459	1.07	502	1.59	541	2.13	578	2.71	613	3.31	647	3.91	681	4.54	713	5.20
13000	490	1.27	530	1.83	567	2.40	603	3.01	636	3.65	668	4.29	700	4.94	731	5.64
14000	520	1.49	560	2.09	595	2.70	628	3.34	660	3.99	691	4.69	721	5.38	751	6.10
15000	552	1.73	590	2.38	623	3.03	655	3.70	686	4.39	715	5.11	744	5.85	771	6.59
16000	583	2.00	619	2.70	652	3.39	682	4.09	712	4.82	740	5.57	767	6.34	794	7.14
17000	615	2.30	650	3.05	681	3.78	710	4.52	739	5.28	766	6.06	792	6.85	818	7.67
18000	646	2.64	680	3.43	711	4.20	739	4.98	766	5.78	792	6.60	817	7.41	842	8.27
19000	678	3.01	711	3.85	741	4.67	768	5.48	794	6.31	819	7.16	844	8.03	867	8.89
20000	711	3.42	742	4.30	771	5.17	797	6.02	823	6.90	847	7.77	871	8.66	894	9.59
21000	743	3.87	773	4.78	801	5.70	827	6.60	852	7.51	875	8.41	898	9.36	920	10.30
22000	775	4.36	805	5.31	832	6.28	857	7.22	881	8.17	904	9.11	926	10.09	947	11.06
23000	808	4.89	836	5.88	863	6.90	887	7.89	911	8.88	933	9.87	954	10.86	975	11.88
24000	840	5.46	868	6.49	894	7.56	918	8.60	941	9.63	962	10.67	983	11.71	1004	12.75
25000	873	6.08	900	7.15	925	8.26	948	9.35	970	10.42	992	11.49	1012	12.59	1032	13.67
26000	906	6.75	931	7.86	956	9.00	979	10.16	1001	11.28	1021	12.37	1041	13.49	1061	14.63
27000	939	7.47	963	8.62	987	9.79	1010	11.01	1031	12.18	1052	13.33	1071	14.47	1090	15.65

Notes:
1. Max fan RPM 1151 for 36.5" Class I Fan
2. Max motor available 20 HP for 36.5" fan size
3. Max motor available 20 HP for 60, 70 & 75T/ 73, 80 & 89T
4. Max CFM is 27000 for 60, 70 & 75T/ 73, 80 & 89T
5. Min CFM is 12000 for 60, 70 & 75T/ 73, 80 & 89T
6. Return fan belt drive RPM selections will be available to cover 500-1100 RPM range +/- 50 RPM
7. Performance data includes cabinet and rain hood effect. Damper pressure drop will have to be added to return duct static per table Table 52, p. 120

Economizer Damper Adjustment

Exhaust Air Dampers

Verify that the exhaust dampers (if equipped) close tightly when the unit is off. Adjust the damper linkage as necessary to ensure proper closure. An access panel is provided under each damper assembly.

Outside Air and Return Air Damper Operation

The outside air and return air damper linkage is accessible from the filter section of the unit. The damper linkage connecting the outside air dampers to the return air dampers is preset from the factory in the number 1 position. Refer to Table 60, p. 126 for the appropriate linkage position for the unit and operating airflow (CFM).

⚠WARNING

No Step Surface!

Do not walk on the sheet metal drain pan. Walking on the drain pan could cause the supporting metal to collapse, resulting in the operator/technician to fall. Failure to follow this recommendation could result in death or serious injury.

Note: Bridging between the unit's main supports may consist of multiple 2 by 12 boards or sheet metal grating.

Arbitrarily adjusting the outside air dampers to open fully when the return air dampers are closed, or failing to maintain the return air pressure drop with the outside air dampers when the return air dampers are closed, can overload the supply fan motor and cause building pressurization control problems due to improper CFM being delivered to the space.

The outside air/return air damper linkage is connected to a crank arm with a series of holes that allows the installer or operator to modify the amount of outside air damper travel ito match the return static pressure. Refer to Table 60, p. 126 for the equivalent return air duct losses that correspond to each of the holes illustrated in Figure 85, p. 117.

To Adjust the Outside Air Damper Travel:

1. Drill a ¼" hole through the unit casing up stream of the return air dampers. Use a location that will produce an accurate reading with the least amount of turbulence. Several locations may be necessary; average readings.

⚠WARNING

Hazardous Voltage!

Disconnect all electric power, including remote disconnects before servicing. Follow proper lockout/tagout procedures to ensure the power can not be inadvertently energized. Failure to disconnect power before servicing could result in death or serious injury.

HIGH VOLTAGE IS PRESENT AT TERMINAL BLOCK 1TB1 OR UNIT DISCONNECT SWITCH 1S14.

2. Close the disconnect switch or circuit protector switch that provides the supply power to the unit's terminal block 1TB1 or the unit-mounted disconnect switch 1S14.
3. Turn the 115 volt control circuit switch 1S1 and the 24 volt control circuit switch 1S70 to the On position.
4. Open the human interface access door, located in the unit control panel, and press the SERVICE MODE key to display the first service screen. Refer to the latest edition of the applicable programming manual for CV or VAV applications for the SERVICE TEST screens and programming instructions.
5. Use Table 45, p. 96, to program the following system components for operation by scrolling through the displays:
   - Supply Fan (On)
   - Variable Frequency Drive (100% Output, if applicable)
   - RTM Occ/Unocc Output (Unoccupied)
   - Outside Air Dampers (Closed)
6. Once the configuration for the components is complete, press the NEXT key until the LCD displays the "Start test in __Sec." screen. Press the + key to designate the delay before the test is to start. This service test will begin after the TEST START key is pressed and the delay designated in this step has elapsed. Press the ENTER key to confirm this choice.
7. Press the TEST START key to start the test. Remember that the delay designated in step 6 must elapse before the fan will begin to operate.
8. With the outside air dampers fully closed and the supply fan operating at 100% airflow requirements, measure the return static pressure at the location determined in step 1.
9. Press the STOP key at the human interface module in the unit control panel to stop the fan operation.

⚠WARNING

Rotating Components!

The following procedure involves working with rotating components. Disconnect all electric power, including remote disconnects before servicing. Follow proper lockout/tagout procedures to ensure the power can not be inadvertently energized. Failure to disconnect power before servicing could result in rotating components cutting and slashing technician which could result in death or serious injury.

10. Open the field-supplied main power disconnect switch upstream of the rooftop unit. Lock the disconnect switch in the Open position while working on the dampers.
11. Compare the static pressure reading to the static pressure ranges and linkage positions in Table 60, p. 126 for the unit size and operating CFM.
12. Relocate the outside air/return air connecting rod to balance the outside air damper pressure drop against the return static pressure, using the following steps. If no adjustment is necessary, proceed to step 17.
    a. Remove the drive rod and swivel from the crank arm(s). If only one hole requires changing, loosen only that end.
    b. Manually open the return air dampers to the full open position.
    c. Manually close the outside air dampers.
    d. Reattach the drive rod and swivel to the appropriate hole(s). The length of the drive rod may need to be adjusted to align with the new hole(s) location. If so, loosen the lock nut on the drive rod against the swivel. Turn the swivel in or out to shorten or lengthen the rod as necessary. For some holes, both ends of the rod may need to be adjusted.
    e. Tighten the lock nut against the swivel(s).
13. Plug the holes after the proper CFM has been established.

Table 60. F/A Damper travel adjustment

Position of Connecting Rod	Damper Crank Arm Hole Configuration	
	Standard and Low Leak F/A Dampers (Figure 87, p. 127)	Ultra Low Leak F/A Dampers (Figure 88, p. 128)
Position #1	2–3	1–6
Position #2	2–4	2–6
Position #3	2–5	3–7
Position #4	2–6	4–8
Position #5	1–8	5–9
Position #6	1–7	5–7

Use Table 61 to select the appropriate crank arm hole configuration based on the following:

- specific unit
- operating CFM
- and return static pressure

Table 61. Outside air damper pressure drop (inches w.c.) — air-cooled and evaporative condensing

(20, 25 Ton and 24, 29 Ton) Units						
	Damper Position					
CFM	#1	#2	#3	#4	#5	#6
4000	0.03	0.04	0.06	0.13	0.16	0.33
6000	0.03	0.04	0.10	0.20	0.30	0.90
8000	0.19	0.21	0.32	0.52	0.75	1.75
9000	0.30	0.35	0.48	0.76	1.08	2.40
10000	0.45	0.51	0.70	1.05	1.57	-
11000	0.62	0.71	0.95	1.42	2.15	-

Table 61. Outside air damper pressure drop (inches w.c.) — air-cooled and evaporative condensing

(30, 36 Ton) Units						
	Damper Position					
CFM	#1	#2	#3	#4	#5	#6
6000	0.03	0.04	0.07	0.15	0.20	0.43
8000	0.03	0.05	0.11	0.21	0.30	0.90
10000	0.15	0.19	0.26	0.43	0.62	1.50
11000	0.20	0.25	0.37	0.60	0.85	1.85
12000	0.31	0.36	0.50	0.79	1.10	2.40
13000	0.42	0.48	0.62	0.97	1.42	-
(40, 48 Ton) Units						
	Damper Position					
CFM	#1	#2	#3	#4	#5	#6
8000	0.03	0.04	0.08	0.16	0.21	0.52
10000	0.03	0.05	0.11	0.21	0.30	0.90
12000	0.10	0.13	0.21	0.38	0.55	1.40
14000	0.20	0.25	0.37	0.60	0.85	1.85
16000	0.41	0.46	0.60	0.94	1.38	-
18000	0.56	0.65	0.74	1.28	1.92	-
(50, 55 and 59 Ton) Units						
	Damper Position					
CFM	#1	#2	#3	#4	#5	#6
10000	0.03	0.04	0.09	0.18	0.23	0.55
14000	0.09	0.12	0.20	0.35	0.50	1.36
18000	0.31	0.36	0.50	0.79	1.10	-
20000	0.45	0.51	0.70	1.05	1.57	-
22000	0.58	0.66	0.75	1.30	1.95	-
24000	0.75	0.88	1.10	1.75	2.50	-
(60, 70, 75 Ton and 73, 80, 89 Ton) Units						
	Damper Position					
CFM	#1	#2	#3	#4	#5	#6
14000	0.03	0.04	0.12	0.25	0.35	1.05
18000	0.19	0.21	0.32	0.52	0.75	1.75
22000	0.45	0.51	0.70	1.05	1.57	-
26000	0.70	0.80	1.02	1.58	2.30	-
28000	0.88	1.03	1.30	2.20	-	-
30000	1.05	1.22	1.55	2.65	-	-
(90 to 130 Ton) Units						
	Damper Position					
CFM	#1	#2	#3	#4	#5	#6
27000	0.31	0.36	0.50	0.79	1.10	2.40
32000	0.55	0.64	0.72	1.25	1.88	-
36000	0.75	0.88	1.10	1.75	2.50	-
40000	1.00	1.18	1.50	2.50	-	-
43000	1.20	1.42	1.92	-	-	-
46000	1.40	1.58	2.29	-	-	-

NOTICE:

Compressors Failure!

Unit must be powered and crankcase heaters energized at least 8 hours BEFORE compressors are started. This will protect the compressors from premature failure.

Compressor Start Up (All Systems)

1. Ensure that the System selection switch at the remote panel is in the Off position.
2. Before closing the disconnect switch, ensure that the compressor discharge service valve and the liquid line service valve for each circuit is back seated.

NOTICE:

Compressors Damage!

Do not allow liquid refrigerant to enter the suction line. Excessive liquid accumulation in the liquid lines could result in compressor damage.

COMPRESSOR SERVICE VALVES MUST BE FULLY OPENED BEFORE START-UP (SUCTION, DISCHARGE, AND LIQUID LINE)

3. Close the disconnect switch or circuit protector switch that provides the supply power to the units terminal block 1TB1 or the unit-mounted disconnect switch 1S14 to allow the crankcase heater to operate a minimum of 8 hours before continuing.

Figure 87. Outside air and return air linkage adjustment (standard and low leak dampers only)

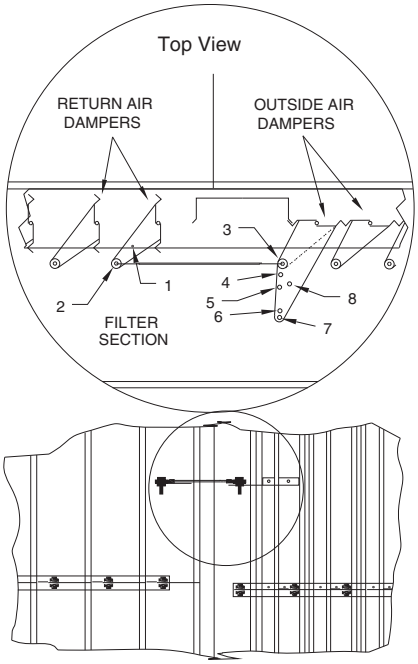

Figure 88. Outside air linkage adjustment (ultra low leak dampers only)

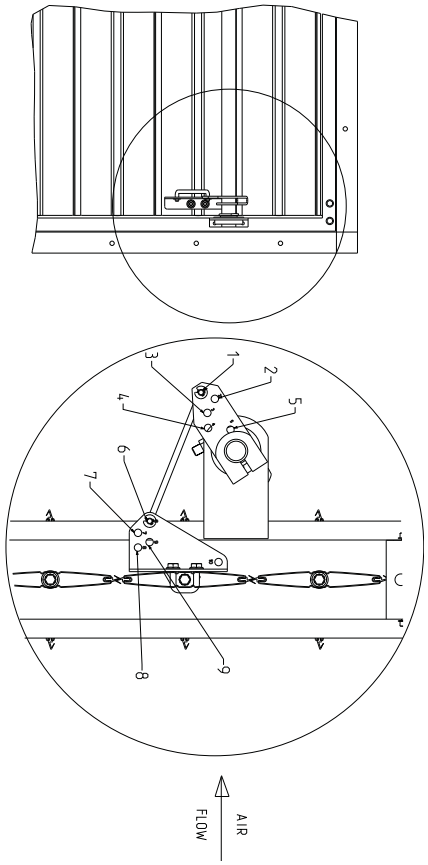

Note: Compressor Damage could occur if the crankcase heater is not allowed to operate the minimum of 8 hours before starting the compressor(s).

4. Turn the 115 volt control circuit switch 1S1 and the 24 volt control circuit switch 1S70 to the ON position.
5. Open the Human Interface access door, located in the unit control panel, and press the SERVICE MODE key to display the first service screen. Refer to the latest edition of the RT-SVP01*-EN for CV applications or RT-SVP02*-EN for VAV applications for the SERVICE TEST screens and programming instructions.
6. Use Table 45, p. 96 to program the following system components for operation by scrolling through the displays:
   - 20 to 36 ton
     - Compressor 1A (On)
     - Compressor 1B (Off)
     - Condenser Fans
   - 40-75 ton (VSC units only)
     - Compressor 1A (On)
     - Compressor 2A (Off)
     - Compressor 2B (Off)
     - Condenser Fans
   - 40-130 ton
     - Compressor 1A (On)
     - Compressor 1B (Off)
     - Compressor 2A (Off)
     - Compressor 2B (Off)
     - Condenser Fans
7. Attach a set of service gauges onto the suction and discharge gauge ports for each circuit. Refer to Figure 89, p. 130 for the various compressor locations.
8. Once the configuration for the components is complete, press the NEXT key until the LCD displays the “Start test in __Sec.” screen. Press the + key to designate the delay before the test is to start. This service test will begin after the TEST START key is pressed and the delay designated in this step has elapsed. Press the ENTER key to confirm this choice.
9. Press the TEST START key to start the test. Remember that the delay designated in step 8 must elapse before the system will begin to operate.
10. Review and follow the Electrical Phasing procedure described in the startup procedure of the IOM. If the compressors are allowed to run backward for even a very short period of time, internal compressor damage may occur and compressor life may be reduced. If a scroll compressor is rotating backwards, it will not pump, make a loud rattling sound and low side shell gets hot. Immediately shut off the unit. If the phasing is incorrect, interchange any two compressor leads to correct the motor phasing.
11. Press the STOP key at the human interface module in the unit control panel to stop the compressor operation.
12. Repeat steps 5-11 for each compressor stage and the appropriate condenser fans.

Refrigerant Charging

1. Attach a set of service gauges onto the suction and discharge gauge ports for each circuit. Refer to Figure 89, p. 130 for the various compressor locations.
2. Open the Human Interface access door, located in the unit control panel, and press the SERVICE MODE key to display the first service screen. Refer to the latest edition of the programming manual for CV or VAV applications for the SERVICE TEST screens and programming instructions.
3. Use Table 45, p. 96 to program the following system components for the number 1 refrigeration circuit by scrolling through the displays.

Supply Fan (On)

- OCC/UNOCC Relay (Unoccupied for VAV units)
- All Compressors for each circuit (On)

- Condenser Fans for each circuit (On)

1. Once the configuration for the components is complete, press the NEXT key until the LCD displays the “Start test in __Sec.” screen. Press the + key to designate the delay before the test is to start. This service test will begin after the TEST START key is pressed and the delay designated in this step has elapsed. Press the ENTER key to confirm this choice.
2. Press the TEST START key to start the test. Remember that the delay designated in step 4 must elapse before the system will begin to operate.
3. After all of the compressors and condenser fans for the number 1 circuit have been operating for approximately 30 minutes, observe the operating pressures. Use the appropriate pressure curve in “Pressure Curves,” p. 131 to p. 142 to determine the proper operating pressures. For superheat and subcooling guidelines, refer to “Thermostatic Expansion Valves and Charging by Subcooling” at the end of this section.

Note: Do not release refrigerant to the atmosphere! If adding or removing refrigerant is required, the service technician must comply with all federal, state and local laws. Refer to general service bulletin MSCU-SB-1 (latest edition).

4. Verify that the oil level in each compressor is correct.
5. Press the STOP key at the human interface module in the unit control panel to stop the system operation.
6. Repeat steps 1-8 for the number 2 refrigeration circuit.

Compressor Crankcase Heaters

The variable speed compressor in 40T units uses a 90 watt heater. The variable speed compressor in 50-70T units uses a 160 watt heater.

Otherwise, 20 to 73 and 80 ton units are equipped with 90 watt heaters installed on each compressor. 75 and 89 to 130 ton units are equipped with 160 watt heaters per compressor.

Compressor Operational Sounds

At Low Ambient Start-up

When the compressor starts up under low ambient conditions, the initial flow rate of the compressor is low due to the low condensing pressure. Under this condition, it is not unusual to hear the compressor rattle until the suction pressure climbs and the flow rate increases.

Variable speed compressors

At all operating speeds, eFlex permanent magnet variable speed compressors sound different than fixed speed scrolls. At low speed, variable speed compressors can sputter. At high speed, variable speed compressor buzz. These are normal operating sounds. To ensure a quiet installation, eFlex variable speed compressors are installed in a sound enclosure. Make sure and keep the sound enclosure installed at all times other than servicing.

Listen to recordings of eFlex variable speed scroll sounds at www.trane.com/eFlexSounds.

NOTICE:

Compressor Sound Change!

Variable speed scroll compressors sound different than single speed scroll compressors. Sound changes with speed and condition.

To assist troubleshooting, listen to normal operating sounds of variable speed scroll compressors at www.trane.com/eFlexSounds

Compressor – Blink Codes

The CSHN*** compressors come equipped with a compressor protection device capable of detecting phase reversal, phase loss, and phase unbalance. The compressor protection device uses a green and red LED to indicate the compressor status. A solid green LED denotes a fault-free condition; a blinking red LED indicates an identifiable fault condition.

Note: If the compressor has tripped, the resistance will be 4500 ohms or greater; when reset, they will be less than 2750 ohms.

Blink code: The blink code consists of different on/off time of the red LED, which is repeated continuously until either the fault is cleared or until power is cycled.

Table 62. CPM blink codes

Fault	LED on	LED off	LED on	LED off
PTC overheat or PTC reset delay active	short blink	long blink	short blink	long blink
Phase loss	long blink	long blink	long blink	long blink
Incorrect phase sequence	short blink	short blink	short blink	long blink

Figure 89. Compressor locations

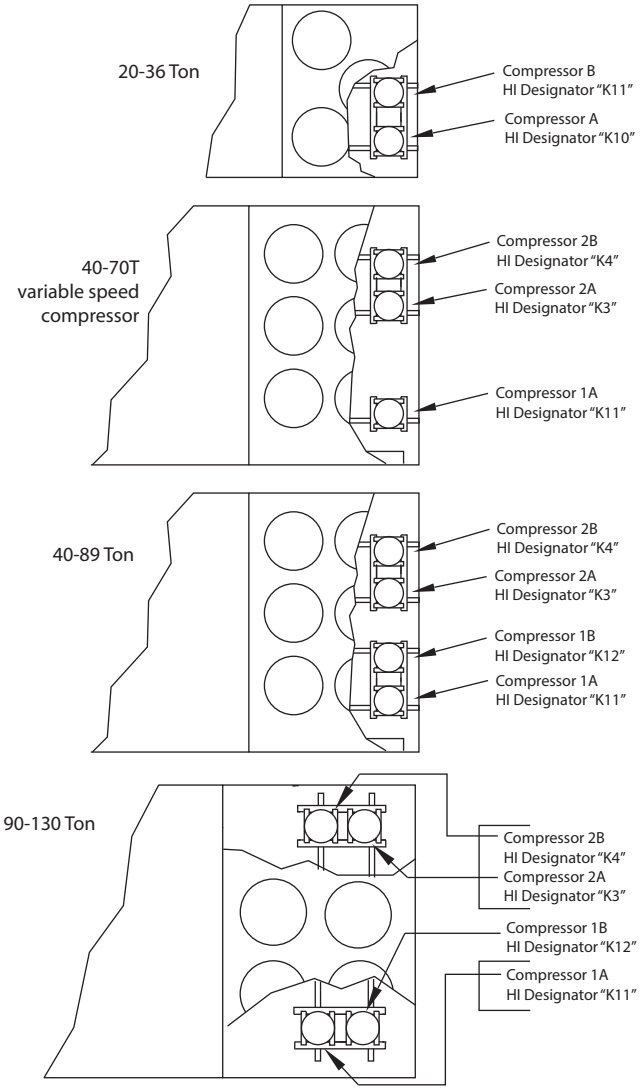

Evaporative Condenser Start-up

Important: Water treatment by a qualified water treatment expert is required to ensure proper equipment life and product performance. Dolphin Water Care is an option offered by Trane that is NOT a substitute for regular water treatment by a qualified water treatment professional. If a water treatment system is not operating on the unit, do not proceed.

Start-up for evaporative and air-cooled condensers is initially the same. In addition, the following is required for evaporative condensers prior to start-up:

- All water and drain connections must be checked and verified
- Evaporative condensers ship with a fan support bracket to reduce damage caused by vibration during shipment. Before unit start-up, remove the shipping support brackets. See "To remove shipping brackets," p. 130 and Figure 90, p. 131 for removal instructions.
- Verify that inlet water pressure is 35-60 PSIG, dynamic pressure (measured with the valve open)
- Verify that drain valve is set to "drain during power loss" or "hold during power loss" per job specification
- Upon a call for cooling, the sump fills with water. Verify that the sump fills to a level within the slot on the max float bracket as shown in Figure 91, p. 131.

To remove shipping brackets

Important: Remove fan shipping brackets before startup. Failure to remove brackets could result in fan damage.

Evaporative condensers ship with fan shipping brackets to reduce damage caused by vibration during shipment. Before unit start-up, remove the fan shipping brackets.

To remove the shipping brackets start from the side opposite to the drain actuator:

1. Loosen the screw for the bracket that holds the inlet louvers below the door side.
2. Remove inlet louvers and set to the side.

Note: Service technician may need to step on the horizontal surface of FRP-coated base. Step with care.

3. Unscrew the bolt in the middle of the door. Keep the bolt in a safe place.
4. Lift one door with handle until it touches the top. Swivel bottom of door to remove it from the door opening and set it to the side.
5. Slide and remove the middle mist eliminator section so that the shipping bracket is visible.
6. Use screw gun to unscrew the two screws that hold the fan shipping bracket. The bracket should drop down but still remain engaged with a hook on the bracket.
7. Go to the other side of the unit and follow the procedure for inlet louver and door removal (see steps 1–6).
8. Hold the bracket with one hand and remove remaining two screws.
9. Remove the bracket and all the removed screws from the unit.

Important: Make sure that no screws remain in the coil area.

10. Reinstall inlet louvers, mist eliminators, and louvers.
11. Check that the direction of arrow on the inlet louver is correct.

Figure 90. Fan shipping bracket removal

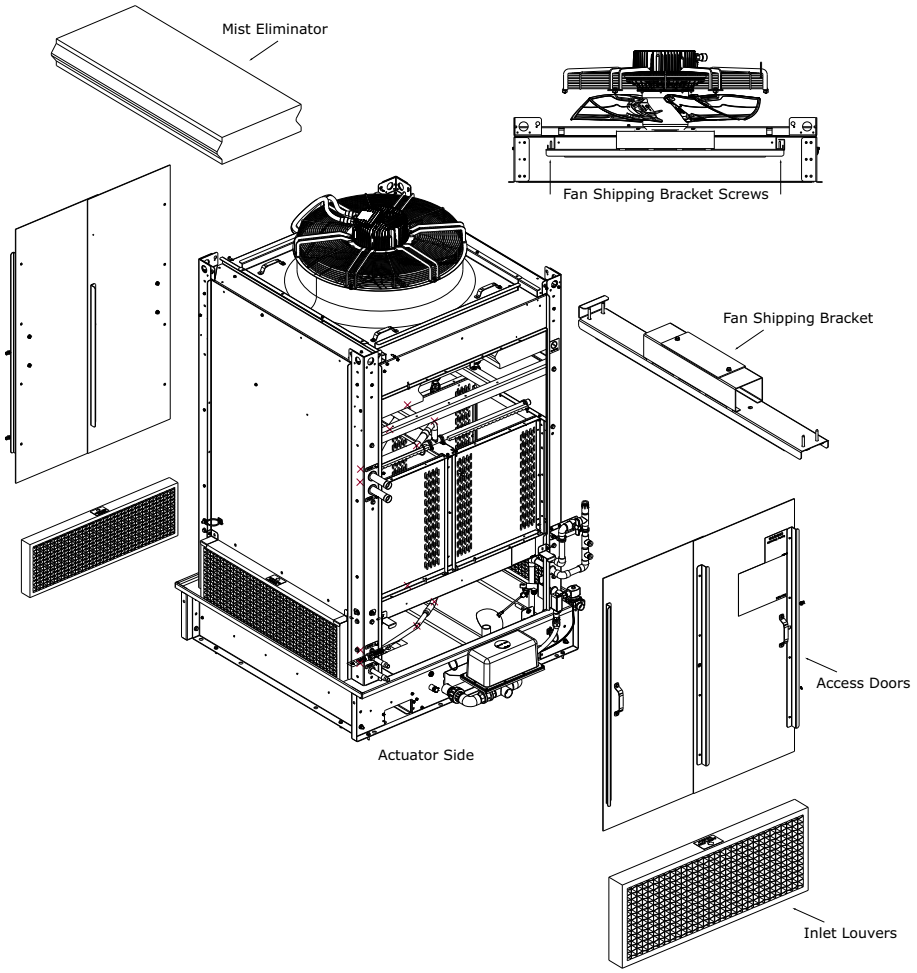

Figure 91. Float bracket setting

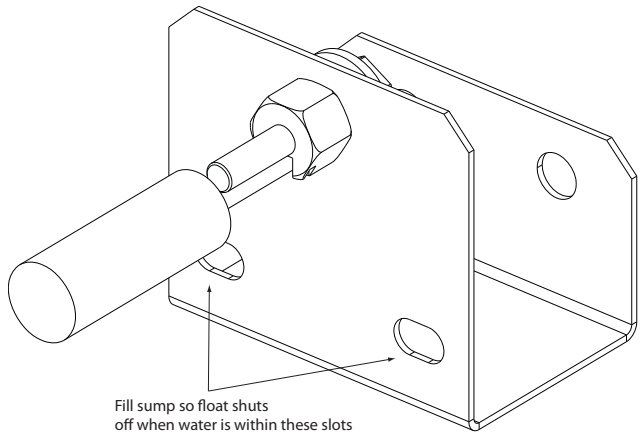

Pressure Curves

To Check Operating Pressures

1. Start the unit and allow the pressures to stabilize.

   Note: If unit includes Modulating Dehumidification Control option, pressure curves apply to the cooling mode only.

2. Measure the outdoor air dry bulb temperature (F) entering the condenser coil.
3. Measure the discharge and suction pressure (psig) next to the compressor.
4. Plot the outdoor dry bulb temperature and the operating suction pressure (psig) onto the chart.
5. At the point of intersection, read to the left for the discharge pressure. The measured discharge pressure should be within ± 7 psig of the graph.

Note: To check operating pressure, see instructions *p. 131*

Figure 92. 20 ton standard capacity operating pressure curve (all compressors and condenser fans ON)

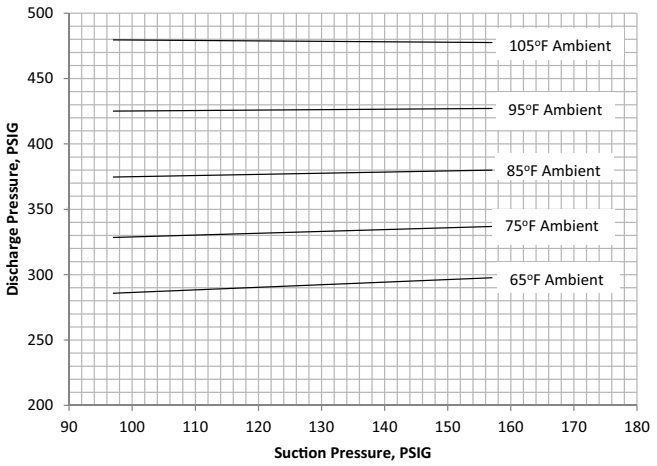

Figure 93. 20 ton high efficiency operating pressure curve (all compressors and condenser fans ON)

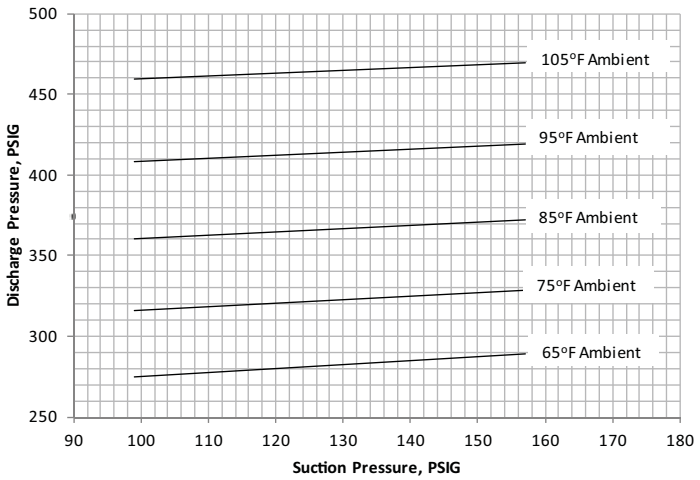

Figure 94. 25 ton standard capacity operating pressure curve (all compressors and condenser fans ON)

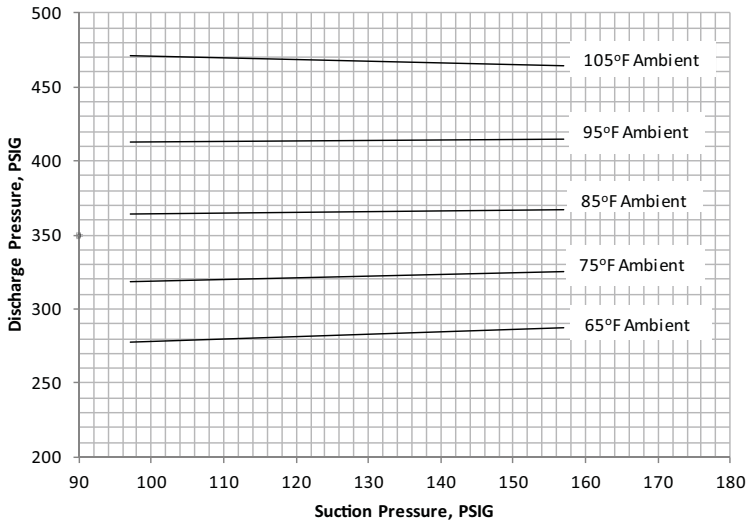

Figure 95. 25 ton high efficiency operating pressure curve (all compressors and condenser fans ON)

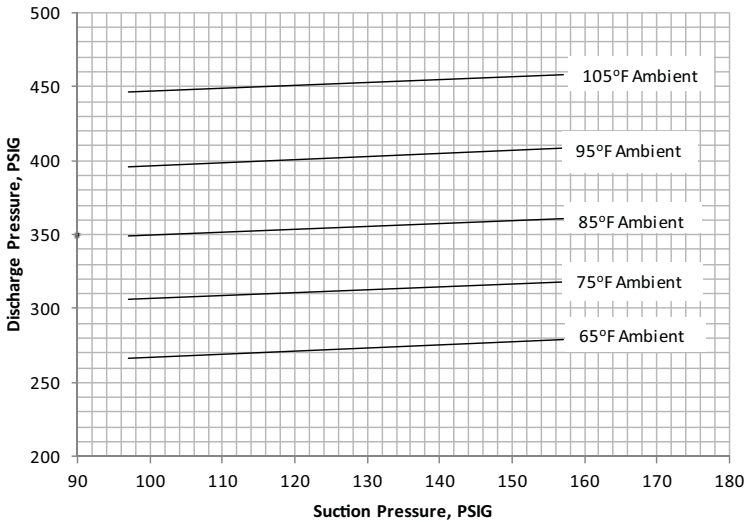

Figure 96. 30 ton standard capacity operating pressure curve (all compressors and condenser fans ON)

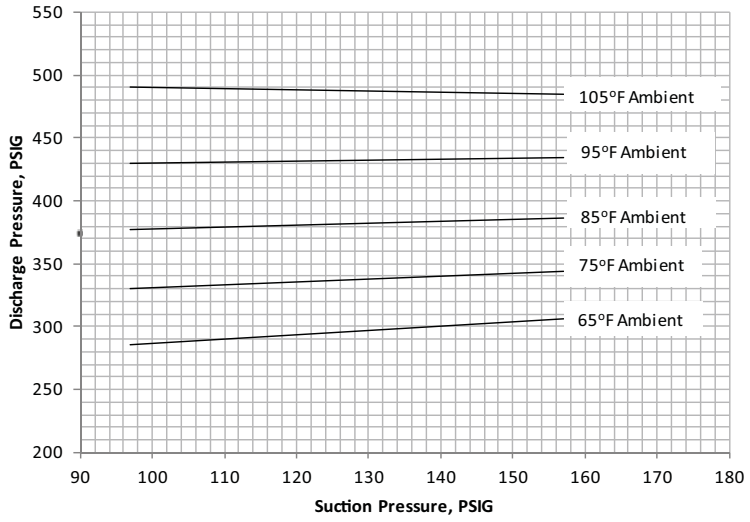

Figure 97. 30 ton high efficiency operating pressure curve (all compressors and condenser fans ON)

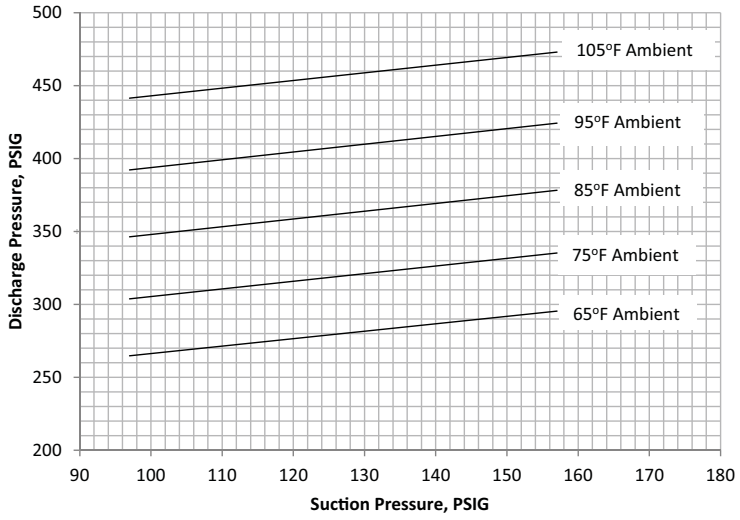

Figure 98. 40 ton standard capacity operating pressure curve (all compressors and condenser fans ONON)

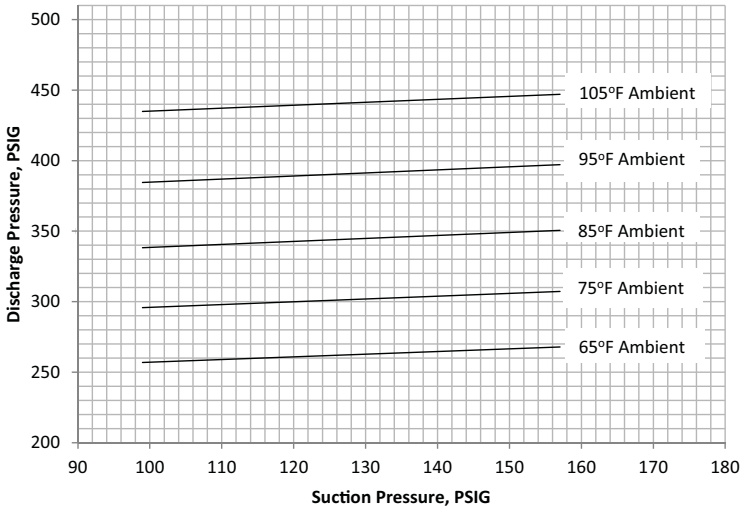

Figure 99. 40 ton high capacity operating pressure curve (all compressors and condenser fans ON)

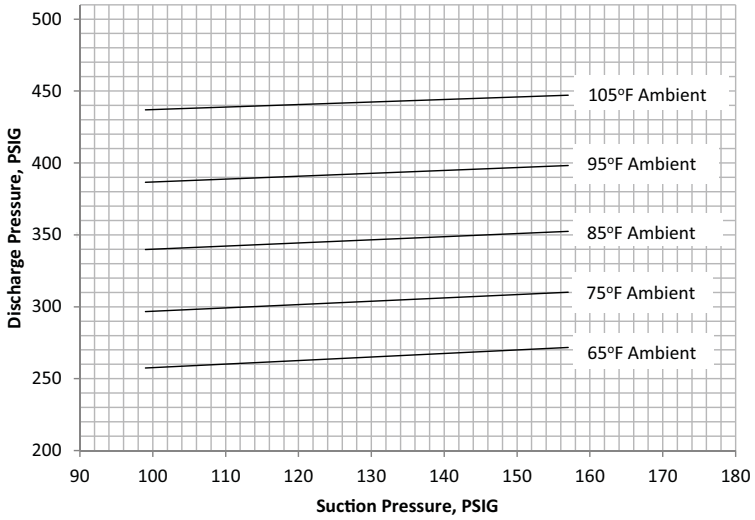

Figure 100.40 ton high efficiency operating pressure curve (all compressors and condenser fans ON)

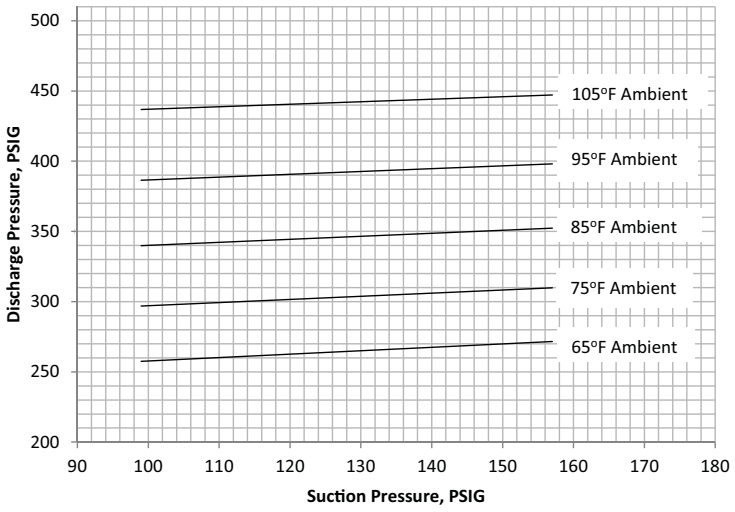

Figure 101.40 ton eFlex variable speed—circuit 1 only operating pressure curve (compressor at 100% and all condenser fans ON). See Figure 94 for circuit 2 operating pressures.

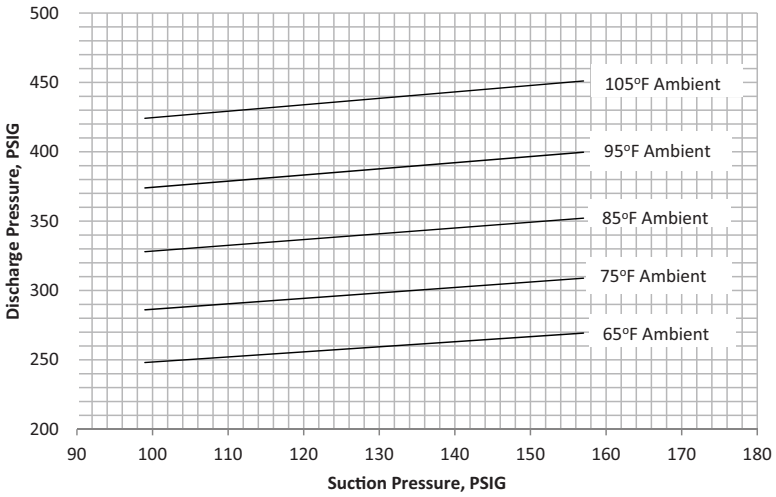

Figure 102.50 ton standard capacity operating pressure curve (all compressors and condenser fans ON)

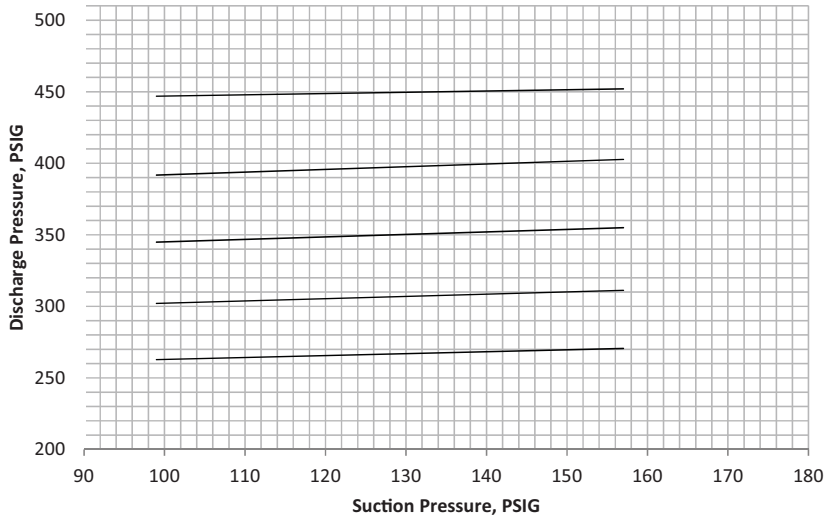

Figure 103.50 ton high capacity operating pressure curve (all compressors and condenser fans ON)

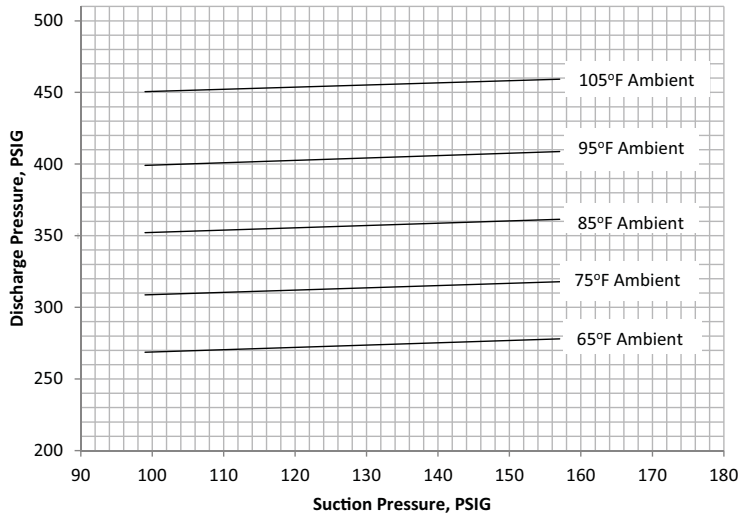

Figure 104. 50 ton high efficiency operating pressure curve (all compressors and condenser fans ON)

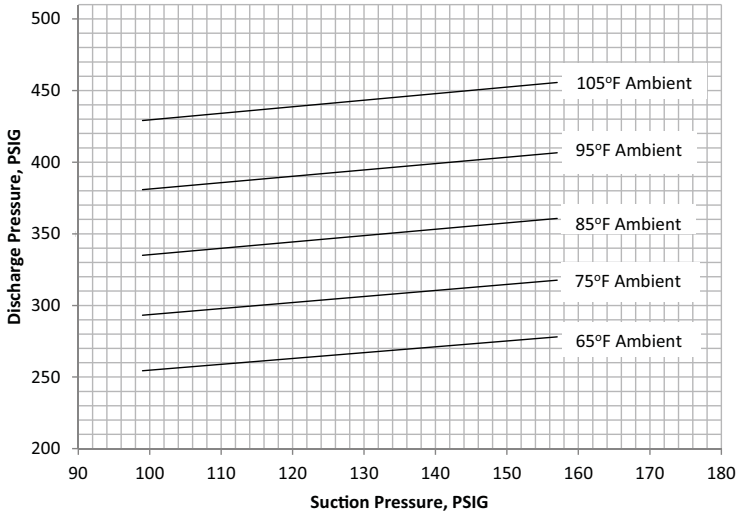

Figure 105. 50 ton eFlex variable speed—circuit 1 only operating pressure curve (compressor at 100% and all condenser fans ON). See Figure 102, p. 137 for circuit 2 operating pressures.

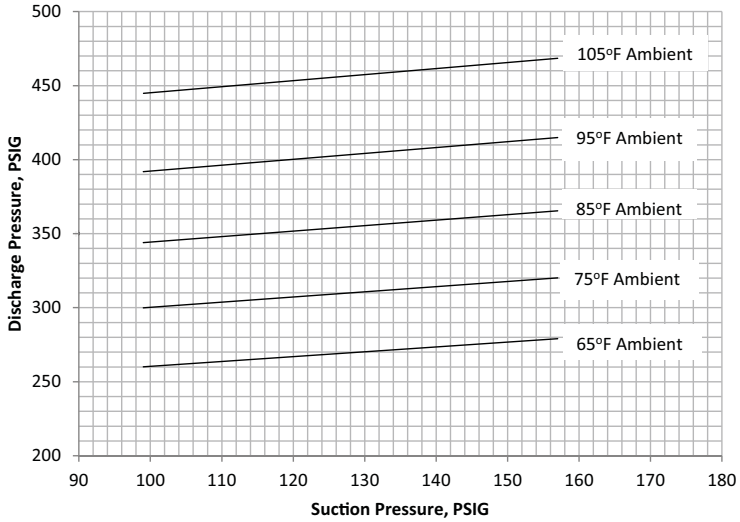

Figure 106. 55 ton standard efficiency operating pressure curve (all compressors and condenser fans ON)

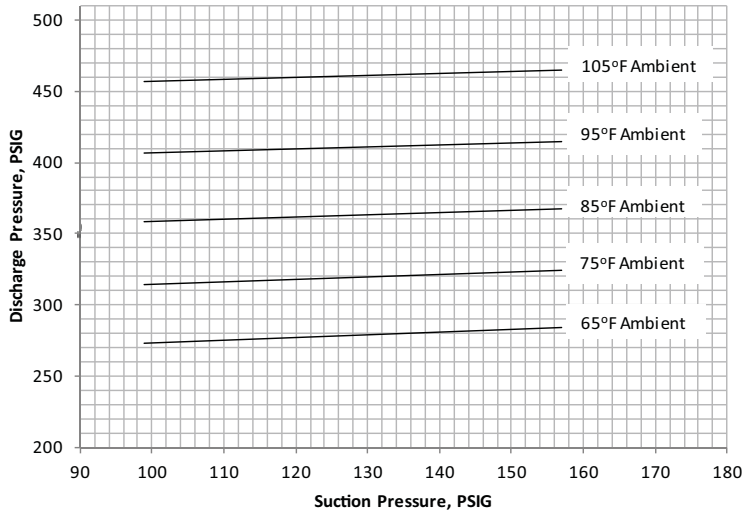

Figure 107. 55 ton high efficiency operating pressure curve (all compressors and condenser fans ON)

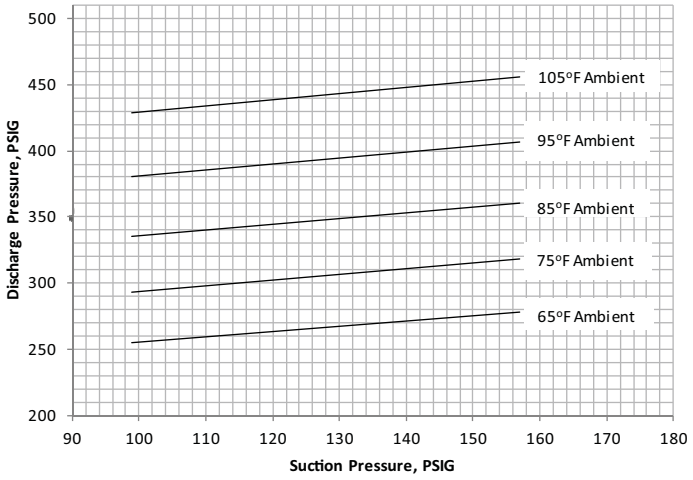

Figure 108. 55 ton eFlex variable speed—circuit 1 operating pressure curve (all compressors and condenser fans ON)
See Figure 106, p. 139 for circuit 2 operating pressures.

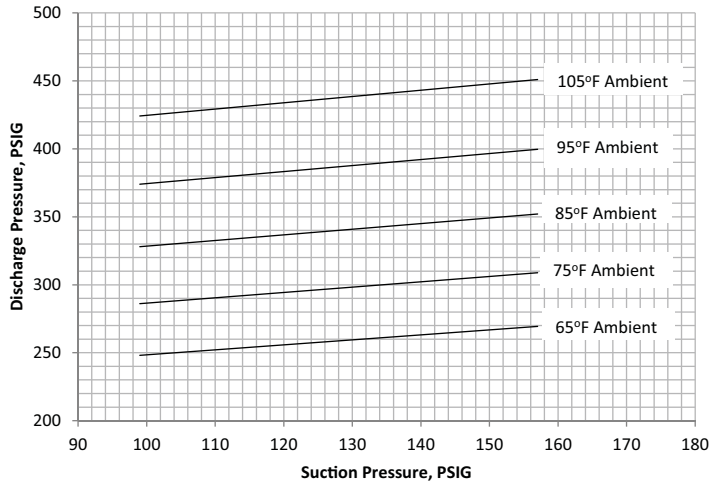

Figure 109. 60 ton standard capacity operating pressure curve (all compressors and condenser fans ON)

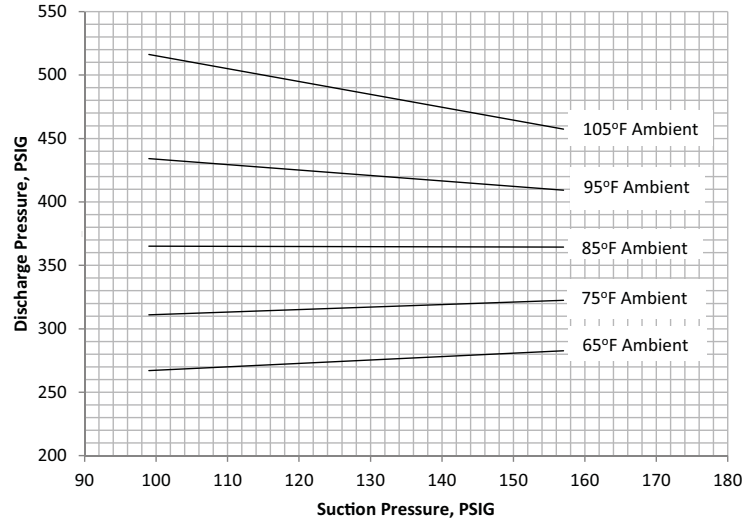

Figure 110. 60 ton high capacity operating pressure curve (all compressors and condenser fans ON)

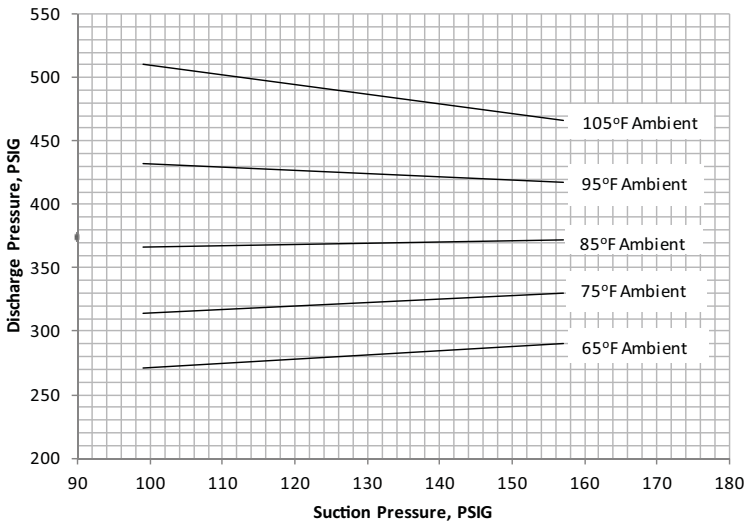

Figure 111. 60 ton high efficiency operating pressure curve (all compressors and condenser fans ON)

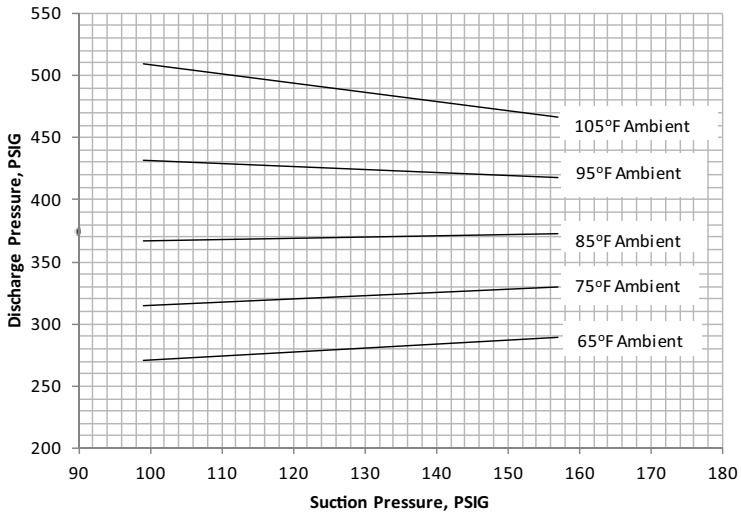

Figure 112. 60 ton eFlex variable speed—circuit 1 only operating pressure curve (compressor at 100% and all condenser fans ON). See Figure 109, p. 140 for circuit 2 operating pressures.

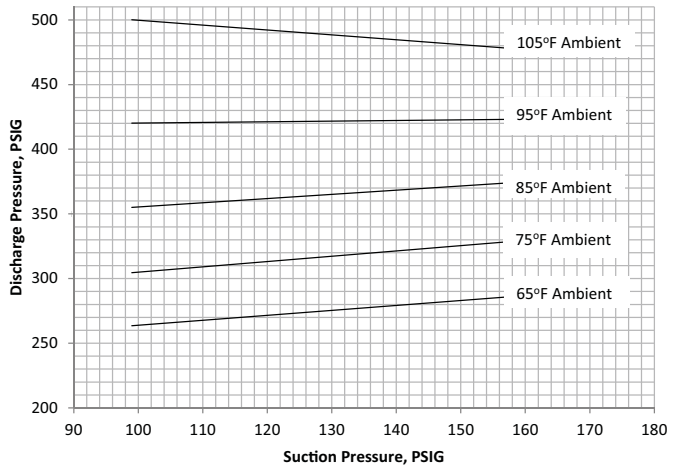

Figure 113. 70 ton standard capacity operating pressure curve (all compressors and condenser fans ON)

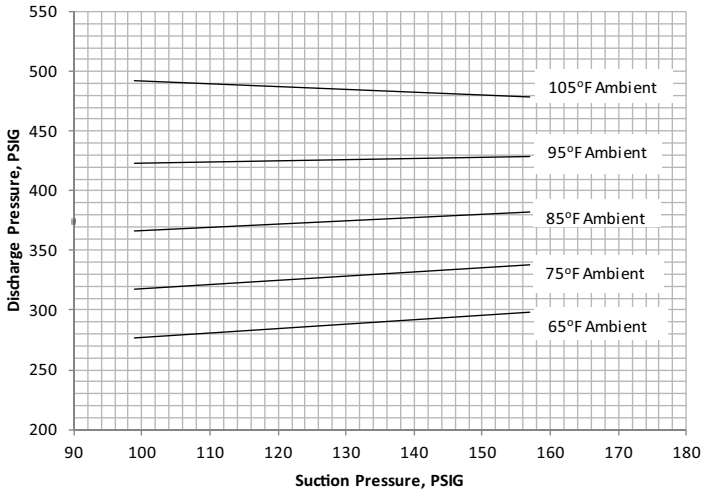

Figure 114. 70 ton high efficiency operating pressure curve (all compressors and condenser fans ON)

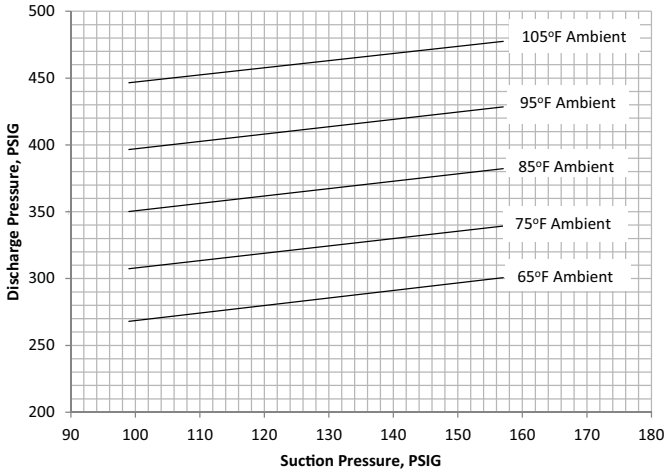

Figure 115. 70 ton eFlex variable speed—circuit 1 only operating, high efficiency pressure curve (compressor at 100% and all condenser fans ON). See Figure 113, p. 142 for circuit 2 operating pressures.)

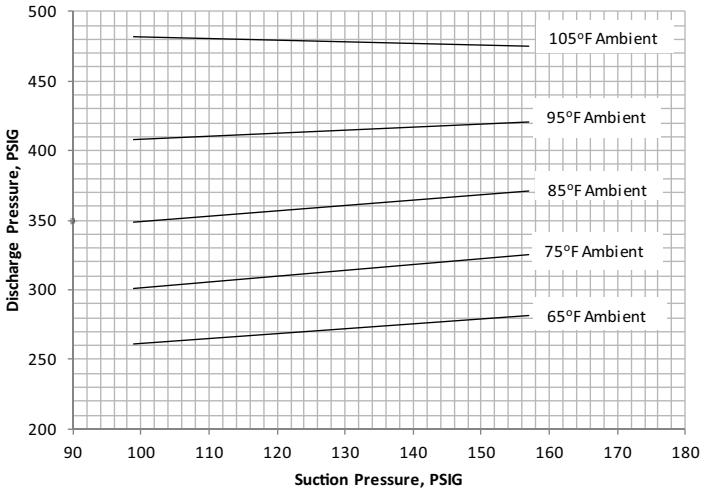

Figure 116. 75 ton standard capacity operating pressure curve (all compressors and condenser fans ON)

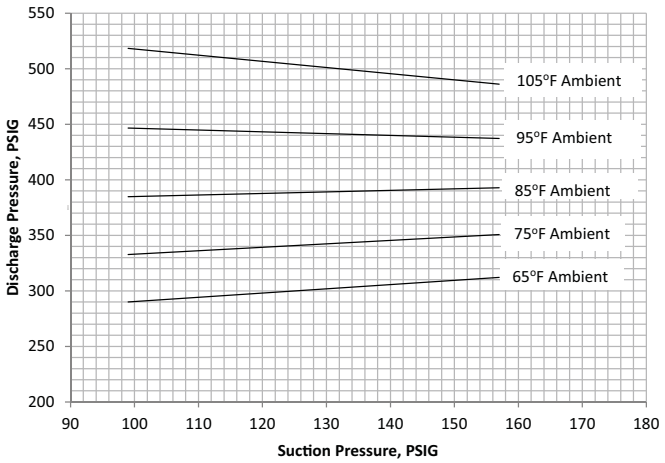

Figure 117. 75 ton high capacity operating pressure curve (all compressors and condenser fans ON)

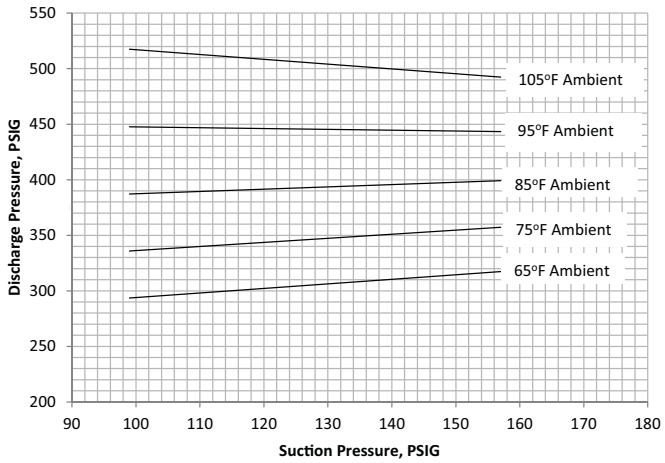

Figure 118. 75 ton high efficiency operating pressure curve (all compressors and condenser fans ON)

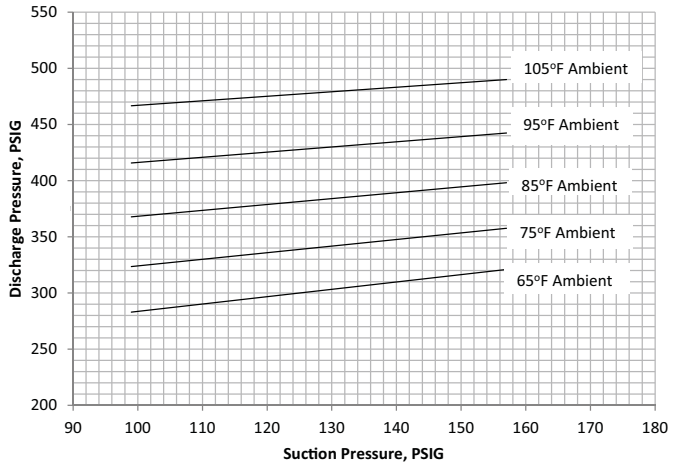

Figure 119. 90 ton standard operating pressure curve (all compressors and condenser fans ON)

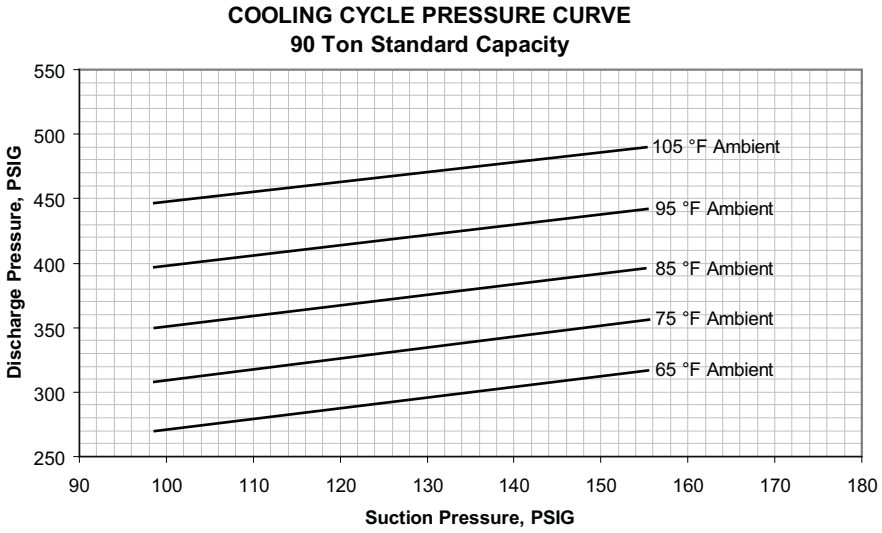

Figure 120. 90 ton high operating, high efficiency pressure curve (all compressors and condenser fans ON)

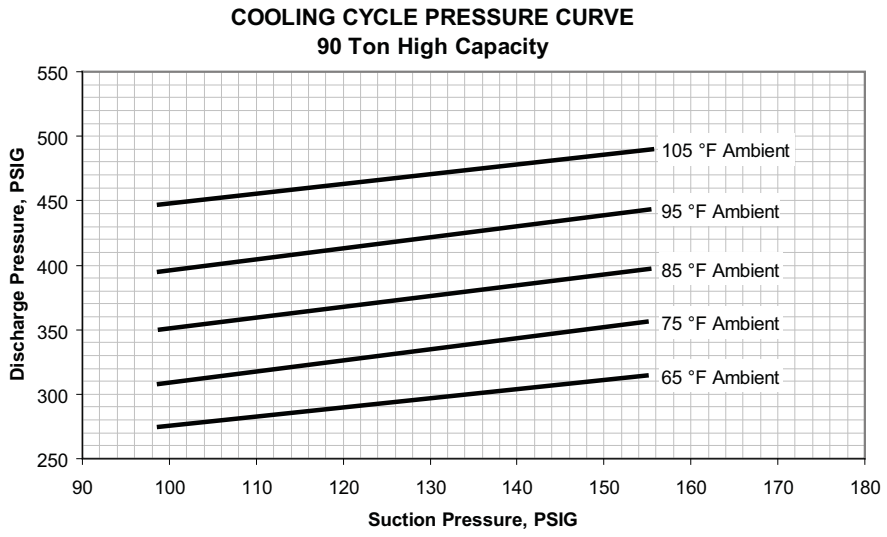

Figure 121. 105 ton high operating pressure curve (all compressors and condenser fans ON)

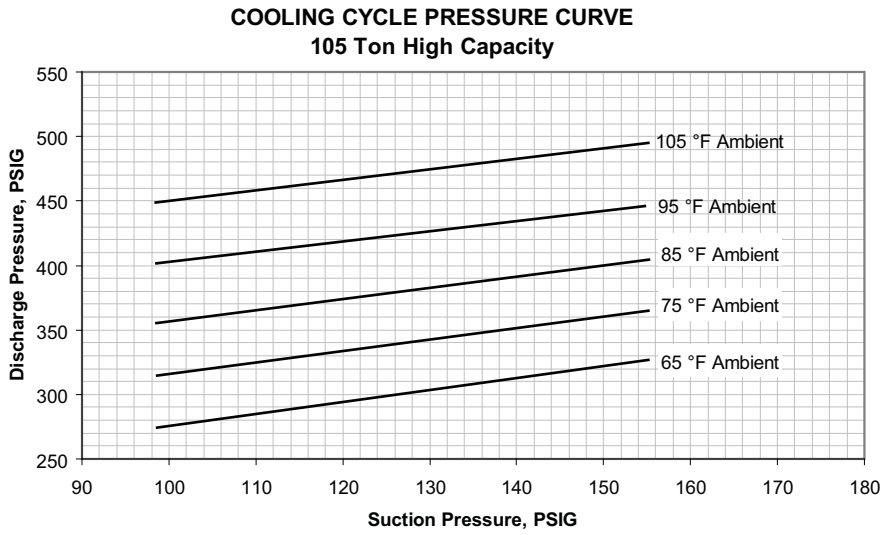

Figure 122. 115 ton high operating pressure curve (all compressors and condenser fans ON)

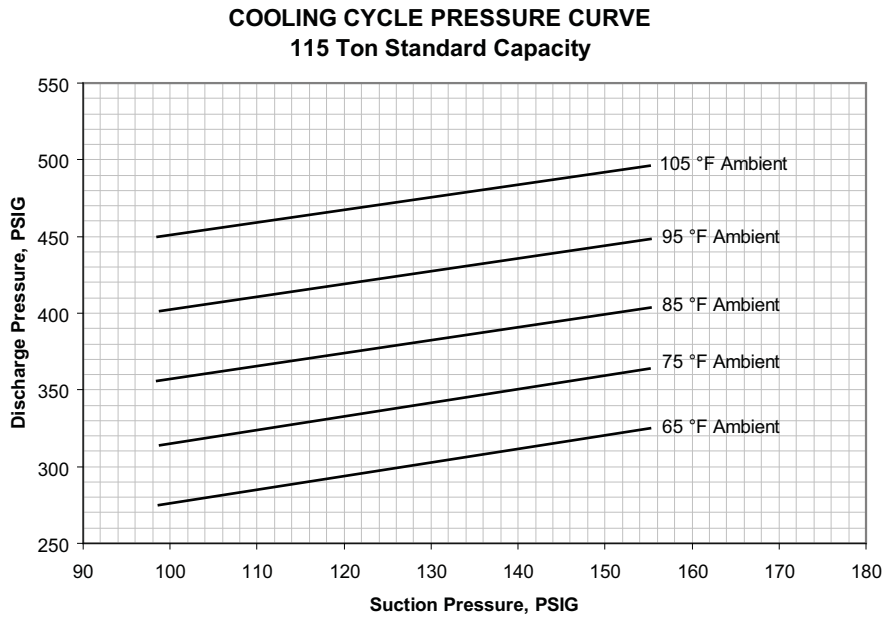

Figure 123. 130 ton high operating pressure curve (all compressors and condenser fans ON)

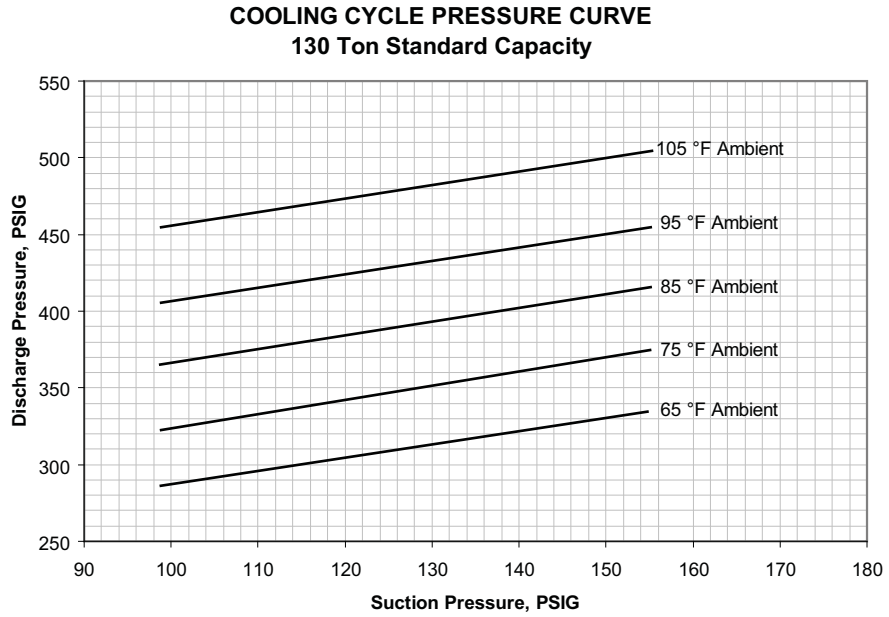

Thermostatic Expansion Valves

The reliability and performance of the refrigeration system is heavily dependent upon proper expansion valve adjustment. Therefore, the importance of maintaining the proper superheat cannot be over emphasized. Expansion valves are preset at the factory. In typical applications, field adjustment should not be required unless the valves are replaced or damaged.

On air-cooled units, the expansion valves, which were shipped installed, were factory set to control between 14–18°F at the ARI full load rating conditions (approximately 45°/125°F saturated suction/discharge).

On evaporative condenser units, the expansion valves, which were shipped installed, were factory set to control between 18–22°F at the ARI full load rating conditions (approximately 45°/105°F saturated suction/discharge). At part load, expect lower superheat. Systems operating with

lower superheat could cause serious compressor damage due to refrigerant floodback.

Tables are based on outdoor ambient between 65° and 105°F, relative humidity above 40 percent. Measuring the operating pressures can be meaningless outside of these ranges.

Measuring Superheat

1. Measure the suction pressure at the suction line gauge access port located near the compressor.
2. Using a refrigerant/temperature chart, convert the pressure reading to a corresponding saturated vapor temperature.
3. Measure the suction line temperature as close to the expansion valve bulb, as possible. Use a thermocouple type probe for an accurate reading.
4. Subtract the saturated vapor temperature obtained in step 2 from the actual suction line temperature obtained in step 3. The difference between the two temperatures is known as "superheat."

When adjusting superheat, recheck the system subcooling before shutting the system OFF.

Note: If unit includes the modulating reheat dehumidification control option, adjust superheat only in the cooling mode of operation.

Charging by Subcooling

The outdoor ambient temperature must be between 65° and 105° F and the relative humidity of the air entering the evaporator must be above 40 percent. When the temperatures are outside of these ranges, measuring the operating pressures can be meaningless.

Do not attempt to charge the system with the low ambient dampers and/or hot gas bypass operating (if applicable). Disable the low ambient dampers in the "Open" position (refer to the "Low Ambient Damper" section) and de-energize the hot gas bypass valves before taking performance measurements.

With the unit operating at "Full Circuit Capacity", acceptable subcooling range for air-cooled condenser units is between 10°F to 18°F. For evaporative condenser units, acceptable subcooling ranges is between 8°F to 14°F.

Note: If unit includes the modulating reheat dehumidification control option, adjust subcooling only in the cooling mode of operation.

Measuring Subcooling

1. At the liquid line service valve, measure the liquid line pressure. Using an R-410A pressure/temperature chart, convert the pressure reading into the corresponding saturated temperature.
2. Measure the actual liquid line temperature as close to the liquid line service valve as possible. To ensure an accurate reading, clean the line thoroughly where the temperature sensor will be attached. After securing the sensor to the line, insulate the sensor and line to isolate it from the ambient air. Use a thermocouple type probe for an accurate reading.
3. Determine the system subcooling by subtracting the actual liquid line temperature (measured in step 2) from the saturated liquid temperature (converted in step 1).

Low Ambient Dampers

Operation

Low ambient dampers are available as a factory-installed option on 20 to 75 ton units or can be field installed. Dampers are used to extend the operation of these units from the standard operational temperatures to a minimum of 0° F without hot gas bypass or 10° F with hot gas bypass. (These values apply when wind speed across the condenser coil is less than 5 mph. If typical wind speeds are higher than 5 mph, a wind screen around the unit may be required.) By restricting the airflow across the condenser coils, saturated condensing temperatures can be maintained as the ambient temperatures change.

The low ambient modulating output(s) on the compressor module controls the low ambient damper actuator for each refrigerant circuit in response to saturated condensing temperature.

When the head pressure control has staged up to fan stage 2 or 3, the modulating output (0 to 10 VDC) will be at 100% (10 VDC). When the head pressure control is at fan stage 1, the modulating output will control the saturated condensing temperature to within the programmable "condensing temperature low ambient control point".

The following Table gives the minimum starting temperatures for both "Standard" & "Low" Ambient units. Do not start the unit in the cooling mode if the ambient temperature is below the recommended operating temperatures.

Table 63. Minimum starting temperatures for air-cooled units[a]

	Minimum Starting Ambient[b]		
		Low Ambient	
Unit Size	Standard[c]	with HGBP	without HGBP
20 & 40	55°	10°	0°
25 & 30	50°	10°	0°
50, 55	35°	10°	0°
60	30°	10°	0°
70-130	45°	10°	0°

(a) Minimum starting temperatures for Evaporative Condenser units is 40°F without a sump heater and 10°F with a sump heater.
(b) Min. starting ambients in °F and is based on unit operating at min. step of
unloading & 5 mph wind across condenser.
(c) With or Without HGBP

Damper Installation

When a unit is ordered with the low ambient option (i.e., Digit 19 is a "1" in the model number), a damper is factory installed over the condenser fans 2B1 and 2B4 (depending on unit size). Refer to the illustration in Figure 63 for the damper locations.

For field installation, mount the dampers over the condenser fans at the locations shown in Figure 63 and connect the actuator for each circuit. (Refer to the installation instructions provided with each kit.)

Damper Adjustment (Factory or Field Installed)

The UCM has a factory default setpoint of 90°F. This setpoint can be adjusted using the Human Interface programming procedures.

Inspect the damper blades for proper alignment and operation. Dampers should be in the closed position during the OFF cycle.

If adjustment is required, do the following:

1. Never depress the actuator clutch while the actuator is energized.
2. At the human interface, program the actuator for 0% on circuit #1 and/or circuit #2. (The output signal will go to 0.0 VDC.)
3. Loosen the actuator clamp.
4. Firmly hold the damper blades in the closed position.
5. Retighten the actuator clamp.

To check damper operation, program the actuator for 100% on circuit #1 and/or circuit #2. (The output signal will go to 10 VDC, and the damper will drive to the full open position.

Filter Differential Pressure Gauge Adjustment

To re-zero the filter differential pressure gauge, unscrew the front cover of the gage in a counterclockwise direction. If it is difficult to loosen, use a small sheet of rubber placed over the cover. The zero-adjustment screw is located behind the scale on the lower left at the point marked zero. Use a small hex Allen wrench and adjust the pointer until it indicates zero. This must be done with the pressure connections vented and the unit supply airflow off.

Electric, Steam and Hot Water Start-up (Constant Volume & Variable Air Volume Systems)

1. Ensure that the System selection switch at the remote panel is in the Off position.

⚠WARNING

Live Electrical Components!

During installation, testing, servicing and troubleshooting of this product, it may be necessary to work with live electrical components. Have a qualified licensed electrician or other individual who has been properly trained in handling live electrical components perform these tasks. Failure to follow all electrical safety precautions when exposed to live electrical components could result in death or serious injury.

2. Close the disconnect switch or circuit protector switch that provides the supply power to the unit's terminal block 1TB1 or the unit-mounted disconnect switch 1S14.

   HIGH VOLTAGE IS PRESENT AT TERMINAL BLOCK 1TB1 OR UNIT DISCONNECT SWITCH 1S14.
3. Turn the 115 volt control circuit switch 1S1 and the 24 volt control circuit switch 1S70 to the On position.
4. Open the human interface access door, located in the unit control panel, and press the SERVICE MODE key to display the first service screen. Refer to the latest edition of the appropriate programming manual for CV or VAV applications for the SERVICE TEST screens and programming instructions.
5. Use Table 45, p. 96 to program the following system components for operation by scrolling through the human interface displays:
   - Electric Heat
     - Supply Fan (On)
     - Variable Frequency Drive (100% Output, if applicable)
     - RTM Occ/Unocc Output (Unoccupied)
     - Heat Stages 1 & 2 (On)
   - Steam or Hot Water Heat
     - Supply Fan (On)
     - Variable Frequency Drive (100% Output, if applicable)
     - RTM Occ/Unocc Output (Unoccupied)
     - Hydronic Heat Actuator (100% Open)
     - Open the main steam or hot water valve supplying the rooftop heater coils.
6. Once the configuration for the appropriate heating system is complete, press the NEXT key until the LCD displays the "Start test in __Sec." screen. Press the + key to designate the delay before the test is to start. This service test will begin after the TEST START key is pressed and the delay designated in this step has elapsed. Press the ENTER key to confirm this choice.

⚠WARNING

Rotating Components!

During installation, testing, servicing and troubleshooting of this product it may be necessary to work with live and exposed rotating components. Have a qualified or licensed service individual who has been properly trained in handling exposed rotating components, perform these tasks. Failure to follow all safety precautions could result in rotating components cutting and slashing technician which could result in death or serious injury.

7. Press the TEST START key to start the test. Remember that the delay designated in step 6 must elapse before the fan will begin to operate.
8. Once the system has started, verify that the electric heat or the hydronic heat system is operating properly by using appropriate service techniques, i.e., amperage readings, delta Ts, etc.
9. Press the STOP key at the human interface module in the unit control panel to stop the system operation.

Gas Furnace Start-up (Constant Volume and Variable Air Volume Systems)

It is important to establish and maintain the appropriate air/fuel mixture to assure that the gas furnace operates safely and efficiently.

Since the proper manifold gas pressure for a particular installation will vary due to the specific BTU content of the local gas supply, adjust the burner based on carbon dioxide and oxygen levels.

The volume of air supplied by the combustion blower determines the amount of oxygen available for combustion, while the manifold gas pressure establishes fuel input. By measuring the percentage of carbon dioxide produced as a by-product of combustion, the operator can estimate the amount of oxygen used and modify the air volume or the gas pressure to obtain the proper air/fuel ratio. Arriving at the correct air/fuel mixture for a furnace results in rated burner output, limited production of carbon monoxide, and a steady flame that minimizes nuisance shutdowns.

Two-stage Gas Furnace

⚠WARNING

Hazardous Gases and Flammable Vapors!

Exposure to hazardous gases from fuel substances have been shown to cause cancer, birth defects or other reproductive harm. Improper installation, adjustment, alteration, service or use of this product could cause flammable mixtures. To avoid hazardous gases and flammable vapors follow proper installation and set up of this product and all warnings as provided in this manual. Failure to follow all instructions could result in death or serious injury.

When using dry nitrogen cylinders for pressurizing units for leak testing, always provide a pressure regulator on the cylinder to prevent excessively high unit pressures. Never pressurize unit above the maximum recommended unit test pressure as specified in applicable unit literature. Failure to properly regulate pressure could result in a violent explosion, which could result in death or serious injury or equipment or property-only-damage.

High-Fire Adjustment

1. Use Table 45, p. 96 to program the following system components for operation by scrolling through the human interface displays:
   - Gas Heat
     - Supply Fan (On)
     - Variable Frequency Drive (100% Output, if applicable)
     - RTM Occ/Unocc Output (Unoccupied)
     - Heat Stages 1 & 2 (On)
     - Turn the 115 volt control circuit switch 4S24 located in the heater control panel to the ON position.
     - Open the manual gas valve, located in the gas heat section.
2. Once the configuration for the appropriate heating system is complete, press the NEXT key until the LCD displays the “Start test in __Sec.” screen. Press the + key to designate the delay before the test is to start. This service test will begin after the TEST START key is pressed and the delay designated in this step has elapsed. Press the ENTER key to confirm this choice.
3. Press the TEST START key to start the test. Remember that the delay designated in step 2 must elapse before the system will begin to operate.
4. Once the system has started, check the appearance of the flame through the sight glass provided on the front of the heat exchanger. In appearance, a normal flame has a clearly defined shape, and is primarily (75%) blue in color with an orange tip.

5. Check the manifold gas pressure by using the manifold pressure port on the gas valve. Refer to Table 64 for the required manifold pressure for high-fire operation. If it needs adjusting, remove the cap covering the high-fire adjustment screw on the gas valve. Refer to Figure 125 for the adjustment screw location. Turn the screw clockwise to increase the gas pressure or counterclockwise to decrease the gas pressure.
6. Use a carbon dioxide analyzer and measure the percentage of carbon dioxide in the flue gas. Refer to the illustration in Figure 124. Take several samples to assure that an accurate reading is obtained. Refer to Table 64 for the proper carbon dioxide levels. A carbon dioxide level exceeding the listed range indicates incomplete combustion due to inadequate air or excessive gas.

Combustion Air Adjustment (O_2)

1. Use an oxygen analyzer and measure the percentage of oxygen in the flue gas. Take several samples to assure an accurate reading. Compare the measured oxygen level to the combustion curve in Figure 125, p. 152. The oxygen content of the flue gas should be 4% to 5%. If the oxygen level is outside this range, adjust the combustion air damper to increase or decrease the amount of air entering the combustion chamber. Refer to Figure 128, p. 154, for the location of the combustion air damper.
2. Recheck the oxygen and carbon dioxide levels after each adjustment. After completing the high-fire checkout and adjustment procedure, the low-fire setting may require adjusting.

Low-fire Adjustment (500 MBH, 850 and 1,000 MBH only)

1. Use the TEST initiation procedures outlined in the previous section to operate the furnace in the low-fire state (1st Stage).
2. Use a carbon dioxide analyzer and measure the percentage of carbon dioxide in the flue gas. Refer to the illustration in Figure 124, p. 151. Take several samples to assure that an accurate reading is obtained. Refer to Figure 125, p. 152 for the proper carbon dioxide levels. If the measured carbon dioxide level is within the listed values, no adjustment is necessary. A carbon dioxide level exceeding the listed range indicates incomplete combustion due to inadequate air or excessive gas.
3. Check the manifold gas pressure by using the manifold pressure port on the gas valve. Refer to Figure 125 for the required manifold pressure during low-fire operation. If it needs adjusting, remove the cap covering the low-fire adjustment screw on the gas valve. Refer to Figure 125 for the adjustment screw location. Turn the screw clockwise to increase the gas pressure or counterclockwise to decrease the gas pressure.

Note: Do not adjust the combustion air damper while the furnace is operating at low-fire.

4. Check the carbon dioxide levels after each adjustment.
5. Press the STOP key at the human interface module in the unit control panel to stop the system operation.

Table 64. Recommended manifold pressures and CO_2 levels during furnace operation (see notes)

Furnace Stage	MBH	Firing Rate	Manifold	
			% CO_2	Pressure
High-Fire	235	100%	8.5–9.5	3.0–3.5
Low-Fire	117	50%	6.0–7.0	0.9
High-Fire	350	100%	8.5- 9.5	3.0–3.5
Low-Fire	175	50%	6.0–7.0	0.9
High-Fire	500	100%	8.5–9.5	3.0–3.5
Low-Fire	250	50%	6.0–7.0	1.25
High-Fire	850	100%	8.5–9.5	3.0–3.5
Low-Fire	500	50%	6.0–7.0	1.25
High-Fire	1000	100%	8.5–9.5	3.0–3.5
Low-Fire	500	50%	6.0–7.0	1.25

Note:
1. Manifold pressures are given in inches w.c.
2. High fire manifold pressure is adjustable on all heaters.
3. Low fire manifold pressure is non-adjustable on 235 MBH and 350 MBH heaters.

Figure 124.Flue gas carbon dioxide and oxygen measurements

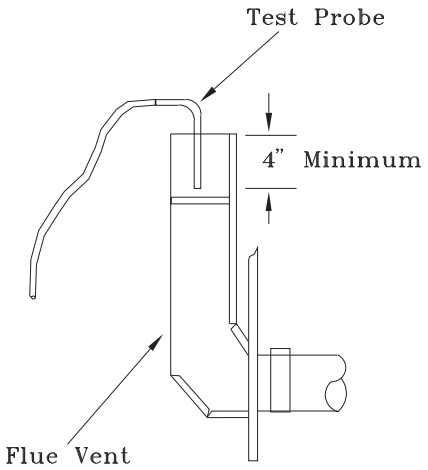

Figure 125. Natural gas combustion curve (ratio of oxygen to carbon dioxide in percent)

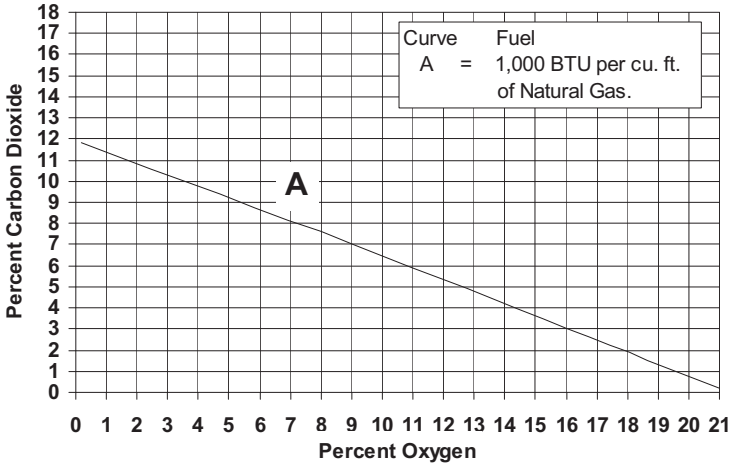

Figure 126. Gas valve adjustment screw locations

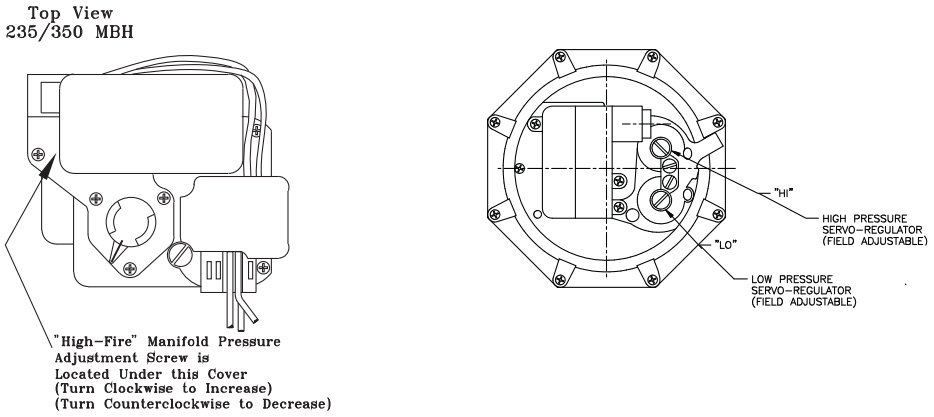

Full Modulating Gas Furnace

Full Modulating gas heaters are available for the 500, 850 and 1000 MBH heater sizes. These heaters are available in the same cabinet sizes as the current heaters.

The firing rate of the unit can vary from the pilot rate of 125 MBH up to the nameplate rating of the unit. The turn down ratios, therefore, vary from 4:1 for the 500 MBH to 8:1 for the 1000 MBH heater.

Heat Exchanger

The heat exchanger drum, tubes and front and rear headers are constructed from stainless steel alloys.

Unit control

The unit is controlled by a supply air temperature sensor located in the supply air stream for Discharge Temperature Control units. Zone Temperature Control units have two sensors, one located in the supply air stream and the zone sensor. The temperature sensor signal is sent to the Heat module of the IntelliPak Unit Control. The control signal from the Heat Module is an inverse proportional 5 -10 VDC. The higher the voltage signal, the lower the call for heat.

The 5 -10 VDC. signal controls the angular position of the combustion air damper through a direct coupled damper actuator motor. The position of the air damper in turn controls the combustion air pressure that is sensed by the modulating gas valve. The greater the combustion air pressure, the greater the call for gas and the higher the firing rate of the heater. As the temperature setpoint is reached, the Modulating Heat control will cause the combustion air actuator to change the damper position to a lower firing rate that matches the heat load of the space.

1. Use Table 45, p. 96 to program the following system components for operation by scrolling through the human interface displays:
   - Gas Heat
     - Supply Fan (On)
     - Variable Frequency Drive (100% Output, if applicable)
     - RTM Occ/Unocc Output (Unoccupied)
     - High Fire (90%)

- Turn the 115 volt control circuit switch 4S24 located in the heater control panel to the On position.
- Open the manual gas valve, located in the gas heat section.

2. Once the configuration for the appropriate heating system is complete, press the NEXT key until the LCD displays the "Start test in __Sec." screen. Press the + key to designate the delay before the test is to start. This service test will begin after the TEST START key is pressed and the delay designated in this step has elapsed. Press the ENTER key to confirm this choice.
3. Press the TEST START key to start the test. Remember that the delay designated in step 2 must elapse before the system will begin to operate.

⚠WARNING

Rotating Components!

During installation, testing, servicing and troubleshooting of this product it may be necessary to measure the speed of rotating components. Have a qualified or licensed service individual who has been properly trained in handling exposed rotating components, perform these tasks. Failure to follow all safety precautions could result in rotating components cutting and slashing technician which could result in death or serious injury.

4. Once the system has started, check the appearance of the flame through the sight glass provided on the front of the heat exchanger. In appearance, a normal flame has a clearly defined shape, and is primarily (75%) blue in color with an orange tip.
5. Check the inlet gas pressure at the modulating gas valve. The inlet pressure should be 6" to 8" w.c.
6. Use a carbon dioxide analyzer and measure the percentage of carbon dioxide in the flue gas. Refer to the illustration in Figure 124, p. 151. Take several samples to assure that an accurate reading is obtained. If the measured carbon dioxide level is between 8.0% and 9.5%, no adjustment is necessary. If the CO_2 is outside this range, it indicates incomplete combustion due to inadequate air or excessive gas.

   The pressure ratio and bias adjustment screws are located on top of the regulator under a sealed plate. The actual settings can be seen through windows on each side of the regulator. Refer to the illustration in Figure 127, p. 154.

   Note: The burner capacity is controlled by the movement of the air damper. This has been preset at the factory and normally does not need field adjustment. The combustion quality (air/gas) is controlled by the settings on the regulator (the plus (+) and minus (-) indications relate to the change in gas flow.

7. Set the air/gas ratio to the desired value using the #1 adjustment screw until the optimum values between (8.0 and 9.5%) are obtained (course setting).
8. Use Table 45, p. 96 to program the minimum (5%) firing rate. Allow the system to operate for approximately 10 minutes.
9. Use a carbon dioxide analyzer and measure the percentage of carbon dioxide in the flue gas. If the measured carbon dioxide level is between 6.0% and 8.0%, no adjustment is necessary. If an adjustment is needed, turn the #2 adjustment screw on the regulator in the Plus (+) direction to increase the CO_2 and in the Minus (-) direction to decrease the CO_2. Refer to the illustration in Figure 126, p. 152 for the adjustment screw location.

   Note: It is normal for the low fire CO_2 to be lower than the high fire.

10. If the measured carbon dioxide level is below the recommended values for low heat, return the burner to 90% fire rate and repeat steps 6 and 7, to achieve optimum combustion.
11. Program the burner for 100% operation and recheck the CO_2 or O_2 value.
12. Check the flue gas values at several intermediate output levels. If corrections are necessary, do the following:
    - Adjust the pressure ratio screw 1 at high fire operation only.
    - Adjust the bias screw 2 at low fire operation only.
13. Press the STOP key at the human interface module in the unit control panel to stop the system operation.

Limited Modulating Gas Furnace

Limited Modulating gas heaters are available for the 500, 850 and 1000 MBH heater sizes. These heaters are available in the same cabinet sizes as the current heaters.

The firing rate of the unit can vary from 33% rated MBH up to the nameplate rating of the unit. The turn down ratios, therefore, is limited to 3:1.

Heat Exchanger

The heat exchanger drum, tubes and front and rear headers utilities the same materials as the standard two stage furnace.

Unit control

The unit is controlled by a supply air temperature sensor located in the supply air stream for Discharge Temperature Control units. Zone Temperature Control units have two sensors, one located in the supply air stream and the zone sensor. The temperature sensor signal is sent to the Heat module of the IntelliPak Unit Control. The control signal from the Heat Module is an inverse proportional 5 -10V DC. The higher the voltage signal, the lower the call for heat.

The 5 -10V DC. signal controls the angular position of the combustion air damper through a direct coupled damper actuator motor. The position of the air damper in turn controls the combustion air pressure that is sensed by the modulating gas valve. The greater the combustion air pressure, the greater the call for gas and the higher the firing rate of the heater. As the temperature setpoint is reached, the Modulating Heat control will cause the combustion air actuator to change the damper position to a lower firing rate that matches the heat load of the space.

1. To verify and check system optimum combustion, use Table 45, p. 96 to program the limited modulating heat system components for 90% operation by scrolling through the Human Interface displays.
2. Follow the checkout procedures discussed in the previous steps.

Note: The minimum firing rate for a limited modulating gas furnace in step 8 is 33%. Travel of the combustion air damper is limited by a welded stop.

3. Press the STOP key at the human interface module in the unit control panel to stop the system operation.

Figure 127. Modulating gas regulator

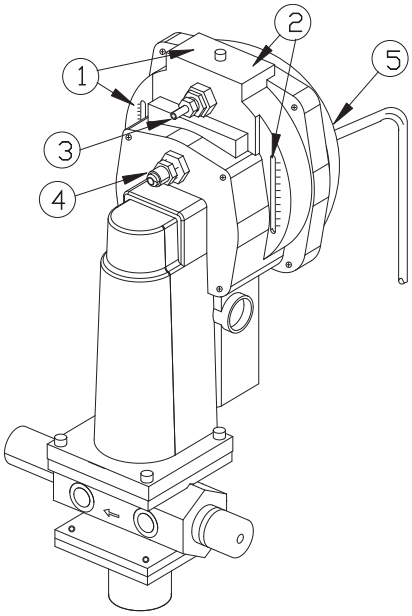

1. Adjustment and indication of the air to gas ratio.
2. Adjustment and indication of the bias.
3. Connection for the Ambient compensation line.
4. Connection for the gas pressure sensing line.
5. Connection for the air pressure sensing line.

Note: There are no serviceable parts on the SKP70 actuator. Should it become inoperative, replace the actuator.

Figure 128. Typical gas furnace

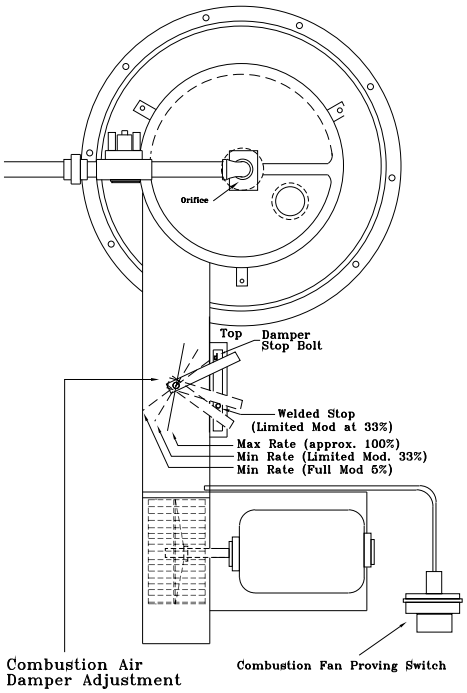

Final Unit Checkout

After completing all of the checkout and start-up procedures outlined in the previous sections (i.e., operating the unit in each of its modes through all available stages of cooling and heating), perform the following final checks before leaving the unit:

1. Close the disconnect switch or circuit protector switch that provides the supply power to the units terminal block 1TB1 or the unit-mounted disconnect switch 1S14.

⚠WARNING

Live Electrical Components!

During installation, testing, servicing and troubleshooting of this product, it may be necessary to work with live electrical components. Have a qualified licensed electrician or other individual who has been properly trained in handling live electrical components perform these tasks. Failure to follow all electrical safety precautions when exposed to live electrical components could result in death or serious injury.

HIGH VOLTAGE IS PRESENT AT TERMINAL BLOCK 1TB1 OR UNIT DISCONNECT SWITCH 1S14.

2. Turn the 115 volt control circuit switch 1S1 Off.
3. Turn the 24 volt control circuit switch 1S70 to the On position.
4. At the human interface module, press the SETUP key. The LCD screen will display various preset parameters of operation based on the unit type, size, and the

installed options. Compare the factory preset information to the specified application requirements. If adjustments are required, follow the step-by-step instructions provided in the appropriate programming manual for CV or VAV applications.

5. Program the Night Setback (NSB) panel (if applicable) for proper unoccupied operation. Refer to the programming instructions for the specific panel.
6. Verify that the remote panel System selection switch, Fan selection switch, and Zone Temperature settings for constant volume systems are correct.
7. Verify that the Remote panel Syste” selection switch and the Supply Air Temperature settings for Discharge Temperature Control systems are correct.
8. Inspect the unit for misplaced tools, hardware, and debris.
9. Turn the 115 volt control circuit switch 1S1 On”
10. Press the AUTO key at the human interface module to begin system operation. The system starts automatically once the dampers modulate and a request for either heating or cooling has been given.
11. Verify that all exterior panels including the control panel doors and condenser grilles are secured in place.

Start-up Checklists

20 to 75 Ton—Air-Cooled

This checklist is intended to be a guide for the start-up technician. Many of the recommended checks and actions could expose the technician to electrical and mechanical hazards.

Refer to the appropriate sections in the unit IOM for appropriate procedures, component specifications, and safety instructions.

Important: This checklist is not intended to be a substitution for the contractor's installation instruction.

Job Name		Serial #	
Job Location		Model #	
Sales Order #		Ship Date	
Unit DL # (special units)		Date	
Starting Sales Office		Technician	

Table 65. Start-up checklist—20 to 75 ton air-cooled

	Verify Task Completed
Access/egress	
Initial site inspection	
Unit exterior inspected for damage (dents, bends, missing panels, doors work properly)	
Unit clearances adequate to avoid air recirculation etc.	
Verify crankcase heaters are working and on for 8 hours prior to unit start (may require 480V availability)	
Wear electrical PPE	
Lockout tag out unit	
Verify unit interior is free from debris/obstructions etc.	
All unit drain lines and traps installed properly	
Remove electrical access panel fastened by (9) bolt/screws or open access doors	
Verify unit is grounded. Confirm a ground wire is coming from power source.	
Verify main power feed wire gauge is properly size for current load	
Verify all wiring connections are tight	
Verify all field control wiring for CV or VAV controls complete	
Verify all automation and remote controls installed/wired	
Verify shipping hardware and plastic covers for compressors has been removed	
Verify hold down bolts and channels from fan sections removed	
Fan section spring isolators checked/adjusted (approx ¼" gap above shipping block)	
Verify damper linkages are tight/adjusted and tip seals are in good condition	
Verify compressor oil levels at proper level (½ -¾ high in glass)	
Compressor discharge service valves, oil valves and liquid lines valves open/back seated	
All fan belts tensioned, bearings greased and sheaves in alignment	
Verify supply and exhaust fan pulley bolts are tight	
Verify fans rotate freely	
Verify refrigerant charge on each circuit	
Remove lock out tag out	
Wear electrical PPE	
Verify correct voltage supplied to unit and electric heaters (see IOM for assistance)	
Verify incoming voltage phase balanced	
Verify all fans rotate in proper direction	
Verify fan amperages within nameplate specs (Please document on log sheet)	

Continued on next page

Table 65. Start-up checklist—20 to 75 ton air-cooled (continued)

	Verify Task Completed
Unit Configuration and Setup	
Verify model number in the UCM configuration matches unit model number on name plate	
Configure unit using IOM and critical control parameters listed in Table 66, p. 158	
Air Cooled Condenser (Digit 27)	
All coil fins inspected and straightened	
Condenser fans are rotating freely	
Verify the fan blade set-screws to the motor shaft of the condenser fan assemblies are tight	
Electric Heat (If Applicable)	
Electric heat circuits have continuity	
Perform electric heat start-up procedure outlined in IOM	
Gas Heat (If Applicable)	
Gas heat piping includes drip leg previously installed by controlling contractor	
Gas heat flue assembly fully installed	
Gas heat condensate line + heat tape installed where applicable	
Verify heating system matches name plate	
Optional Gas Burner (Digit 9)	
2 Stage Gas Burner Set-up procedure in IOM	
Modulating Burner Set-up procedure in IOM	
Hot Water Heat (If Applicable)	
Verify hot water pipes are proper size, routed through the base and no leaks are present	
Verify swing joints or flexible connectors are installed next to hot water coil	
Verify gate valve is installed in the supply and return branch line	
Verify three way modulating valve is installed with valve seating against the flow	
Verify coil venting is installed if water velocity is less than 1.5 feet per second	
Steam Water Heat (If Applicable)	
Verify steam pipes are proper size, routed through the base and no leaks are present	
Verify steam heat swing check vacuum breakers installed and vented	
Verify 2-way modulating valve has been installed	
Verify steam trap installed properly with discharge 12 inches below the outlet connection on the coil	
System Checkout	
Verify system airflow	
Verify dampers open and close properly	
Adjust outside air damper travel	
Verify compressor operation, voltage and amperage matches name plate information (Please document on log sheet)	
Verify superheat and subcooling normal (Please document on log sheet)	
Operating log completed	
All panels/doors secured	
Complete all required documentation	

Table 66. Critical control parameters

Notes:

- Using the human interface (HI), go to SETUP menu and input setting for parameters listed below.
- Use Figure 129, p. 165 to determine region of country based on unit site location.
- Fixed speed compressor units 8F deadband
- eFlex™ compressor units 4F deadband

	Suggested Parameter	Economizer Settings						
		Region 1	Region 2	Region 3	Region 4	Region 5	Region 6	Region 7
Supply Air Temperature Control Setpoint	55°F							
Supply Air Temperature Deadband	8°F							
Supply Air Pressure Setpoint	1.8" w.c.							
Supply Air Pressure Deadband	0.1" w.c.							
Building Static Pressure Setpoint	0.03" w.c.							
Building Static Pressure Deadband	0.04" w.c.							
Standby Freeze Avoidance	20%							
Exhaust Enable Setpoint	10%							
Economizer Minimum Position Setpoint	10%							
Fixed Dry Bulb Economizer C/O Type a (Moist)*		T_{OA} > 65°F	T_{OA} > 65°F	T_{OA} > 65°F	T_{OA} > 65°F	T_{OA} > 70°F	T_{OA} > 70°F	T_{OA} > 70°F
Fixed Dry Bulb Economizer C/O Type b (Dry)*	T_{OA} > 75°F							
Fixed Dry Bulb Economizer C/O Type c (Marine)*				T_{OA} > 75°F	T_{OA} > 75°F	T_{OA} > 75°F		
Fixed Reference Enthalpy Changeover	H_{OA} > 28 Btu							
Differential Comparative Enthalpy Changeover	H_{OA} > H_{RA}							

Notes: See map (Figure 129, p. 165) below for dry bulb changeover.
Examples:
(a) Minneapolis, Minnesota is in “Region 6” and resides in “Moist” subregion, thus designation is 6b. Economizer changeover setting should be 75°F.
(b) Charleston, South Carolina is in “Region 3” and resides in “Moist” subregion, thus the designation is 3c. Economizer changeover setting should be 65°F.

24 to 89 Ton—Evaporative Condenser

Important: Water treatment is required before beginning start-up. Failure to do so will damage the unit and result in premature unit degradation.

This checklist is intended to be a guide for the start-up technician. Many of the recommended checks and actions could expose the technician to electrical and mechanical hazards. Refer to the appropriate sections in the unit IOM for appropriate procedures, component specifications, and safety instructions.

Important: This checklist is not intended to be a substitution for the contractor's installation instruction.

Job Name		Serial #	
Job Location		Model #	
Sales Order #		Ship Date	
Unit DL # (special units)		Date	
Starting Sales Office		Technician	

Table 67. Start-up checklist—24 to 89 ton evaporative cooling

	Verify Task Completed
Access/egress	
Initial site inspection	
Unit exterior inspected for damage (dents, bends, missing panels, doors work properly)	
Unit clearances adequate to avoid air recirculation etc.	
Verify crankcase heaters are working and on for 8 hours prior to unit start (may require 480V availability)	
Wear electrical PPE	
Lockout tag out unit	
Verify unit interior is free from debris/obstructions etc.	
All unit drain lines and traps installed properly	
Remove electrical access panel fastened by (9) bolt/screws or open access doors	
Verify unit is grounded. Confirm a ground wire is coming from power source.	
Verify main power feed wire gauge is properly size for current load	
Verify all wiring connections are tight	
Verify all field control wiring for CV or VAV controls complete	
Verify all automation and remote controls installed/wired	
Verify shipping hardware and plastic covers for compressors has been removed	
Verify hold down bolts and channels from fan sections removed	
Fan section spring isolators checked/adjusted (approx ¼" gap above shipping block)	
Verify damper linkages are tight/adjusted and tip seals are in good condition	
Verify compressor oil levels at proper level (½ -¾ high in glass)	
Compressor discharge service valves, oil valves and liquid lines valves open/back seated	
All fan belts tensioned, bearings greased and sheaves in alignment	
Verify supply and exhaust fan pulley bolts are tight	
Verify fans rotate freely	
Verify refrigerant charge on each circuit	
Remove lock out tag out	
Wear electrical PPE	
Verify correct voltage supplied to unit and electric heaters (see IOM for assistance)	
Verify incoming voltage phase balanced	
Verify all fans rotate in proper direction	
Verify fan amperages within nameplate specs (Please document on log sheet)	

Continued on next page

Table 67. Start-up checklist—24 to 89 ton evaporative cooling

	Verify Task Completed
Unit Configuration and Setup	
Verify model number in the UCM configuration matches unit model number on name plate	
Configure unit using IOM and critical control parameters listed in Table 67, p. 159	
Evaporative Condenser (Digit 27)	
Verify condenser fan shipping bracket has been removed from above mist eliminators in evaporative condenser module	
Verify all water and drain connections are complete	
Verify inlet water pressure is between 35-60 psig, dynamic pressure (measured with valve open) for min. flow rate of 30 GPM	
Verify drain valve function is set to “drain during power loss” or “hold during power loss” per job specification	
Verify that the sump fills to a level within the slot on the max float bracket as shown in Figure 91, p. 131	
Verify water treatment system has been installed/approved—discontinue startup if proof of active water treatment does not exist	
Verify conductivity controller calibration has been documented and min and max setpoints have been setup	
Electric Heat (If Applicable)	
Electric heat circuits have continuity	
Perform electric heat start-up procedure outlined in IOM	
Gas Heat (If Applicable)	
Gas heat piping includes drip leg previously installed by controlling contractor	
Gas heat flue assembly fully installed	
Gas heat condensate line + heat tape installed where applicable	
Verify heating system matches name plate	
Optional Gas Burner (Digit 9)	
2 Stage Gas Burner Set-up procedure in IOM	
Modulating Burner Set-up procedure in IOM	
Hot Water Heat (If Applicable)	
Verify hot water pipes are proper size, routed through the base and no leaks are present	
Verify swing joints or flexible connectors are installed next to hot water coil	
Verify gate valve is installed in the supply and return branch line	
Verify three way modulating valve is installed with valve seating against the flow	
Verify coil venting is installed if water velocity is less than 1.5 feet per second	
Steam Water Heat (If Applicable)	
Verify steam pipes are proper size, routed through the base and no leaks are present	
Verify steam heat swing check vacuum breakers installed and vented	
Verify 2-way modulating valve has been installed	
Verify steam trap installed properly with discharge 12" below the outlet connection on the coil	
System Checkout	
Verify system airflow	
Verify dampers open and close properly	
Adjust outside air damper travel	
Verify compressor operation, voltage and amperage matches name plate information (Please document on log sheet)	
Verify superheat and subcooling normal (Please document on log sheet)	
Operating log completed	
All panels/doors secured	
Complete all required documentation	

Table 68. Critical control parameters

Notes:

- Using the human interface (HI), go to SETUP menu and input setting for parameters listed below.
- Use Figure 129, p. 165 to determine region of country based on unit site location.
- Fixed speed compressor units 8F deadband

	Suggested Parameter	Economizer Settings						
		Region 1	Region 2	Region 3	Region 4	Region 5	Region 6	Region 7
Supply Air Temperature Control Setpoint	55°F							
Supply Air Temperature Deadband	8°F							
Supply Air Pressure Setpoint	1.8" w.c.							
Supply Air Pressure Deadband	0.1" w.c.							
Building Static Pressure Setpoint	0.03" w.c.							
Building Static Pressure Deadband	0.04" w.c.							
Standby Freeze Avoidance	20%							
Exhaust Enable Setpoint	10%							
Economizer Minimum Position Setpoint	10%							
Fixed Dry Bulb Economizer C/O Type a (Moist)*		T_{OA} > 65°F	T_{OA} > 65°F	T_{OA} > 65°F	T_{OA} > 65°F	T_{OA} > 70°F	T_{OA} > 70°F	T_{OA} > 70°F
Fixed Dry Bulb Economizer C/O Type b (Dry)*	T_{OA} > 75°F							
Fixed Dry Bulb Economizer C/O Type c (Marine)*				T_{OA} > 75°F	T_{OA} > 75°F	T_{OA} > 75°F		
Fixed Reference Enthalpy Changeover	H_{OA} > 28 Btu							
Differential Comparative Enthalpy Changeover	H_{OA} > H_{RA}							

Notes: See map (Figure 129, p. 165) below for dry bulb changeover.
Examples:
(a) Minneapolis, Minnesota is in “Region 6” and resides in “Moist” subregion, thus designation is 6b. Economizer changeover setting should be 75°F.
(b) Charleston, South Carolina is in “Region 3” and resides in “Moist” subregion, thus the designation is 3c. Economizer changeover setting should be 65°F.

90 to 130 Ton—Air Cooled

Important: Before beginning start-p, verify water treatment is functional.

This checklist is intended to be a guide for the start-up technician. Many of the recommended checks and actions could expose the technician to electrical and mechanical hazards.

Refer to the appropriate sections in the unit IOM for appropriate procedures, component specifications, and safety instructions.

Important: This checklist is not intended to be a substitution for the contractor's installation instruction.

Job Name		Serial #	
Job Location		Model #	
Sales Order #		Ship Date	
Unit DL # (special units)		Date	
Starting Sales Office		Technician	

Table 69. IntelliPak start-up checklist—90 to 130 ton air cooled

	Verify Task Completed
Access/Egress	
Initial Site Inspection	
Unit exterior inspected for damage (dents, bends, missing panels, doors work properly)	
Unit clearances adequate to avoid air recirculation etc.	
Verify crankcase heaters are working and on for 8 hours prior to unit start (may require 480V availability)	
Wear electrical PPE	
Lockout tag out unit	
Verify unit interior is free from debris/obstructions etc.	
All unit drain lines and traps installed properly	
Remove electrical access panel fastened by (9) bolt/screws or open access doors	
Verify unit is grounded. Confirm a ground wire is coming from power source.	
Verify main power feed wire gauge is properly size for current load	
Verify all wiring connections are tight	
Verify all field control wiring for CV or VAV controls complete	
Verify all automation and remote controls installed/wired	
Verify shipping hardware and plastic covers for compressors has been removed	
Verify hold down bolts and channels from fan sections removed	
Fan section spring isolators checked/adjusted (approx ¼" gap above shipping block)	
Verify damper linkages are tight/adjusted and tip seals are in good condition	
Verify compressor oil levels at proper level (½ -¾ high in glass)	
Compressor discharge service valves, oil valves and liquid lines valves open/back seated	
All fan belts tensioned, bearings greased and sheaves in alignment	
Verify supply and exhaust fan pulley bolts are tight	
Verify fans rotate freely	
Verify refrigerant charge on each circuit	
Remove lock out tag out	
Wear electrical PPE	
Verify correct voltage supplied to unit and electric heaters (see IOM for assistance)	
Verify incoming voltage phase balanced	
Verify all fans rotate in proper direction	
Verify fan amperages within nameplate specs (Please document on log sheet)	

Continued on next page

Table 69. IntelliPak start-up checklist—90 to 130 ton air cooled

	Verify Task Completed
Unit Configuration and Setup	
Verify model number in the UCM configuration matches unit model number on name plate	
Configure unit using IOM and critical control parameters listed in Table 67, p. 159	
Air Cooled Condenser (Digit 27)	
All coil fins inspected and straightened	
Condenser fans are rotating freely	
Verify the fan blade set-screws to the motor shaft of the condenser fan assemblies are tight	
Electric Heat (If Applicable)	
Electric heat circuits have continuity	
Perform electric heat start-up procedure outlined in IOM	
Gas Heat (If Applicable)	
Gas heat piping includes drip leg previously installed by controlling contractor	
Gas heat flue assembly fully installed	
Gas heat condensate line + heat tape installed where applicable	
Verify heating system matches name plate	
Optional Gas Burner (Digit 9)	
2 Stage Gas Burner Set-up procedure in IOM	
Modulating Burner Set-up procedure in IOM	
Hot Water Heat (If Applicable)	
Verify hot water pipes are proper size, routed through the base and no leaks are present	
Verify swing joints or flexible connectors are installed next to hot water coil	
Verify gate valve is installed in the supply and return branch line	
Verify three way modulating valve is installed with valve seating against the flow	
Verify coil venting is installed if water velocity is less than 1.5 feet per second	
Steam Water Heat (If Applicable)	
Verify steam pipes are proper size, routed through the base and no leaks are present	
Verify steam heat swing check vacuum breakers installed and vented	
Verify 2-way modulating valve has been installed	
Verify steam trap installed properly with discharge 12" below the outlet connection on the coil	
System Checkout	
Verify system airflow	
Verify dampers open and close properly	
Adjust outside air damper travel	
Verify compressor operation, voltage and amperage matches name plate information (Please document on log sheet)	
Verify superheat and subcooling normal (Please document on log sheet)	
Operating log completed	
All panels/doors secured	
Complete all required documentation	

Table 70. Critical control parameters

Notes:

- Using the human interface (HI), go to SETUP menu and input setting for parameters listed below.
- Use Figure 129, p. 165 to determine region of country based on unit site location.

	Suggested Parameter	Economizer Settings						
		Region 1	Region 2	Region 3	Region 4	Region 5	Region 6	Region 7
Supply Air Temperature Control Setpoint	55°F							
Supply Air Temperature Deadband	8°F							
Supply Air Pressure Setpoint	1.8" w.c.							
Supply Air Pressure Deadband	0.1" w.c.							
Building Static Pressure Setpoint	0.03" w.c.							
Building Static Pressure Deadband	0.04" w.c.							
Standby Freeze Avoidance	20%							
Exhaust Enable Setpoint	10%							
Economizer Minimum Position Setpoint	10%							
Fixed Dry Bulb Economizer C/O Type a (Moist)*		T_{OA} > 65°F	T_{OA} > 65°F	T_{OA} > 65°F	T_{OA} > 65°F	T_{OA} > 70°F	T_{OA} > 70°F	T_{OA} > 70°F
Fixed Dry Bulb Economizer C/O Type b (Dry)*	T_{OA} > 75°F							
Fixed Dry Bulb Economizer C/O Type c (Marine)*				T_{OA} > 75°F	T_{OA} > 75°F	T_{OA} > 75°F		
Fixed Reference Enthalpy Changeover	H_{OA} > 28 Btu							
Differential Comparative Enthalpy Changeover	H_{OA} > H_{RA}							

Note: See map (Figure 129, p. 165) below for dry bulb changeover.
Examples:
(a) Minneapolis, Minnesota is in “Region 6” and resides in “Moist” subregion, thus designation is 6b. Economizer changeover setting should be 75°F.
(b) Charleston, South Carolina is in “Region 3” and resides in “Moist” subregion, thus the designation is 3c. Economizer changeover setting should be 65°F.

Figure 129. Dry bulb changeover map

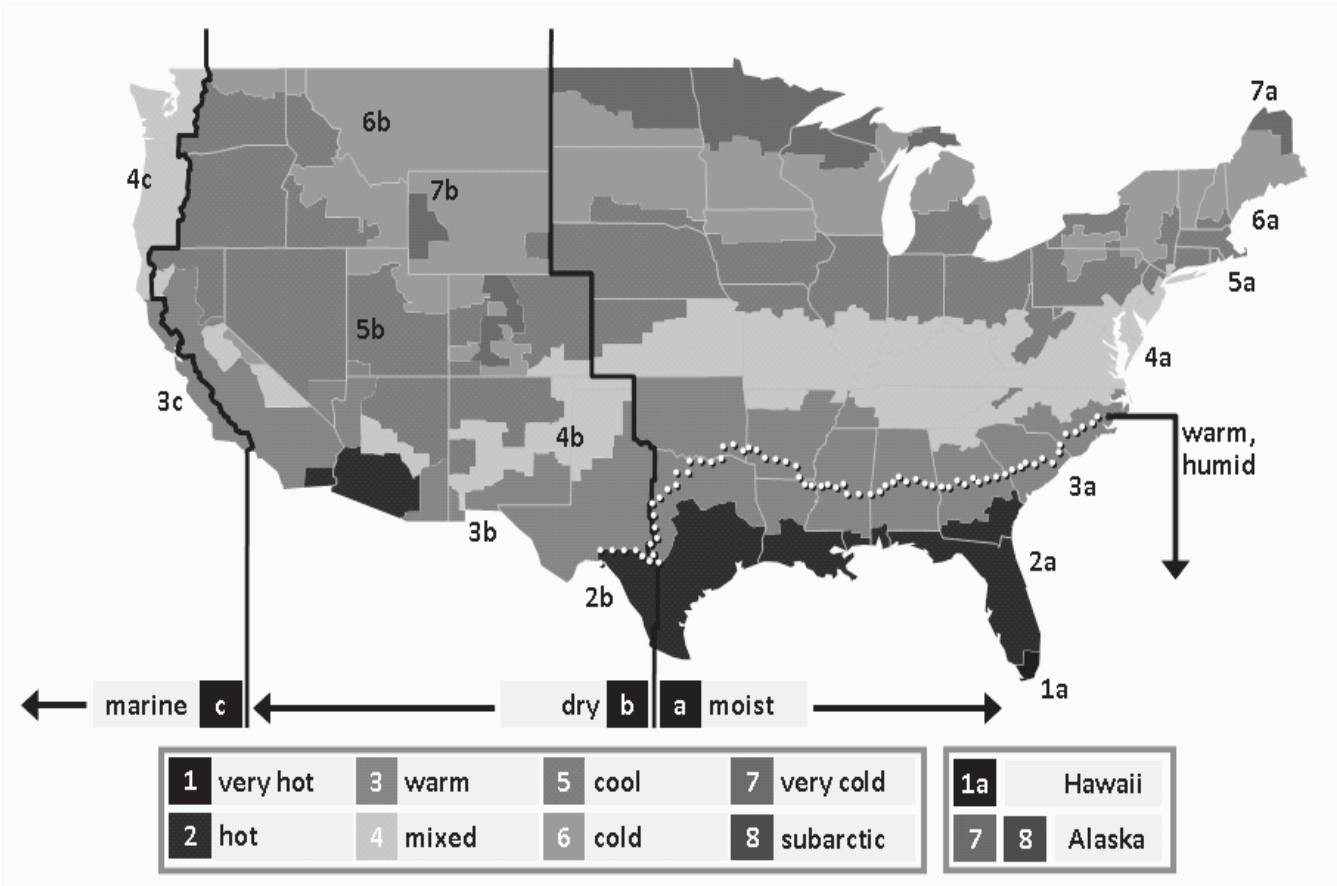

Maintenance

Table 71. Control settings and time delays

Control Description	Elec. Designation	Contacts Open	Contacts Closed
Compressor Circuit Breakers 20–130	1CB8 thru 1CB11	See Table 72, p. 166	See Table 72, p. 166
Combustion Airflow Switch (Gas Heat Only)	4S25	see Note	0.1–0.25" wc rise in press diff
High Limit Cutout (Gas Heat Only)	4S26	250 + 15°F	210°F
Supply Airflow Switch (Gas Heat Only)	4S38	0.03–0.12" wc	0.15 + 0.05" wc rise in press diff
Disch High Limit (Electric Heat Only)	4S27	133 + 5°F	110 + 5°F
Linear High Limit (Electric Heat Only)	4S33	185 + 10°F (std./UL)	145°F (std./UL)
		165 F + 10°F (CSA)	125°F (CSA)
Freezestat (Hydronic Heat Only)	4S12	(N.O.) Auto Reset	40°F
Gas Heat Units			
Prepurge Timer: Honeywell	4U18	internal timing function	60 seconds
Sequencing Time Delay Relay	4DL6	N.C.–timed to close	60 seconds + 20%

Note: The combustion airflow switch (4S25) differential is 0.02"–0.08" wc.

Table 72. Compressor circuit breakers (1CB8—1CB11) electrical characteristics

Unit Size	Comp Designation	200 V		230 V	
		Must Hold	Must Trip	Must Hold	Must Trip
20	1A,1B	50.4	58	43.2	49.7
Hi Cap.	1A,1B	50.4	58	43.2	49.7
25	1A	50.4	58	43.2	49.7
	1B	57.1	65.7	51.4	59.2
Hi Cap.	1A	50.4	58	43.2	49.7
	1B	63.1	72.5	57.1	65.7
30	1A,1B	63.1	72.5	57.1	65.7
Hi Cap	1A	63.1	72.5	69.3	79.7
	1B	57.1	65.7	59.4	68.3
40	1A,2A	38.1	43.8	37	42.5
	1B,2B	45.5	52.3	38.7	44.5
Hi Cap	1A,1B,2A,2B	45.5	52.3	38.7	44.5
50	1A,2A, 1B,2B	50.4	58	43.3	49.7
Hi Cap	1A,2A,	50.4	58	43.3	49.7
	1B,2B	57.2	65.7	51.4	59.2
55	1A,1B,2A,2B	57.2	65.7	51.4	59.2
60	1A,2A	57.1	65.7	51.4	59.2
	1B,2B	63.1	72.5	57.1	65.7
Hi Cap	1A,1B,2A,2B	63.1	72.5	57.1	65.7
70	1A,1B,2A,2B	69.3	79.7	59.4	68.3
75	1A,2A	73.7	84.7	63.1	72.5
	1B,2B	105.2	121	90.7	104.3
Hi Cap	1A,2A	73.7	84.7	63.1	72.5
	1B,2B	105.2	121	90.7	104.3

Figure 130. Unit internal fuse replacement data for air cooled units, CV & SZVAV

TRANE THIS DRAWING IS PROPRIETARY AND SHALL NOT BE COPIED OR ITS CONTENTS DISCLOSED TO OUTSIDE PARTIES WITHOUT THE CONSENT OF TRANE.		FILE NUMBER: 2313-1117	DRAWING NUMBER: 2313-1118	SHEET: 1 OF 1	REV A
DRAWN BY: K. EDWARDS	TRANE© DATE: 6/05/12	ROOFTOP PACKAGED AIR CONDITIONER DIAGRAM FIELD CONNECTION EXTERNAL DEVICES - AREA 5 20-130 TON CONSTANT VOLUME & SINGLE ZONE VAV			
REPLACES: 2313-1108-C	REVISION DATE: --				
CAD SYSTEM USED: Pro/DETAIL	SIMILAR TO: --				

NOTES:

19 FOR 50-60 TON WITH 0.50 KVA TRANSFORMER, 15A FUSE REPLACEMENT IS REQUIRED WITH 200V/230V/460V/575V UNIT VOLTAGE AND 20A FUSE REPLACEMENT IS REQUIRED WITH 380V/415V UNIT VOLTAGE.

29 SEE FUSE REPLACEMENT TABLE ON VFD PANEL FOR VFD POWER FUSES (F40, F41, F42).

FUSE REPLACEMENT TABLE

CONDENSER FAN FUSE 1F1 THRU 1F6 CLASS RK5	UNIT VOLTAGE	200V/60/3	230V/60/3	380V/50/3	415V/50/3	460V/60/3	575V/60/3
	TIME DELAY	25A	25A	15A	15A	15A	15A
OPTIONAL CONVENIENCE OUTLET FUSE 1F55 AND 1F56 (TIME DELAY TYPE FNQ-R FUSE)		12A	10A	N/A	N/A	5A	4A

COMPRESSOR PROTECTION FUSE 1F44 & 1F45 - TYPE MTH	6A	TRANSFORMER CIRCUIT FUSE 1F72-1F74 - TYPE FNQ-R	15A	ELECTRIC HEAT FUSE 4F19-4F36, 4F46-4F48 - CLASS K5	60A

CONTROL POWER FUSE

CONTROL (1T1) TRANSFORMER RATING		0.25 KVA	0.30 KVA	0.50 KVA	0.75 KVA	1.00 KVA	1.50 KVA
1F7 CLASS CC - TYPE FNQ-R	20-30 TON	6.25A	6.25A	--	10A	--	--
	40 TON	15A	20A	--	20A	--	--
	50-60 TON	--	--	15A/20A	--	20A	-- 19
	70-75 TON	--	--	--	--	15A	20A
	90-130 TON	--	--	--	--	15A	20A

VFD PROTECTION FUSES (CLASS "T" FUSES - 600V RATING) 29

OPTIONAL SUPPLY VFD 1F57-1F62 OPTIONAL EXHAUST / RETURN VFD 1F63-1F65

	UNIT VOLTAGE	3 HP	5 HP	7.5 HP	10 HP	15 HP	20 HP	25 HP	30 HP	40 HP	50 HP
BELT DRIVE MOTORS 20-130T UNITS	200V/60/3	40A	60A	80A	100A	150A	200A	225A	300A	350A	N/A
	230V/60/3	30A	45A	70A	90A	125A	175A	200A	250A	300A	N/A
	380V/50/3	15A	30A	45A	50A	90A	100A	125A	150A	200A	N/A
	415V/50/3	15A	30A	45A	50A	90A	100A	125A	150A	200A	N/A
	460V/60/3	15A	25A	35A	45A	60A	90A	100A	125A	150A	200A
	575V/60/3	15A	15A	25A	35A	50A	70A	80A	100A	125A	175A

	UNIT VOLTAGE	3 HP	5 HP	7.5 HP	10 HP	15 HP 1K-1.6K RPM	15 HP 1.7K-2.4K RPM	20 HP	25 HP	30 HP
OPTIONAL DIRECT DRIVE MOTORS 20-59T UNITS	200V/60/3	40A	60A	80A	100A	150A	150A	200A	225A	300A
	230V/60/3	30A	45A	70A	90A	125A	125A	175A	200A	250A
	460V/60/3	15A	25A	35A	45A	70A	60A	90A	100A	125A
	575V/60/3	15A	15A	25A	35A	50A	50A	70A	80A	100A

	UNIT VOLTAGE	10 HP	15 HP 1K-1.6K RPM	15 HP 1.7K-2.4K RPM	20 HP	30 HP 1K-1.6K RPM	30 HP 1.7K-2.4K RPM	40 HP	50 HP
OPTIONAL DIRECT DRIVE MOTORS 60-89T UNITS	200V/60/3	125A	175A	150A	200A	300A	300A	350A	N/A
	230V/60/3	90A	150A	125A	175A	250A	250A	300A	N/A
	460V/60/3	45A	70A	60A	90A	125A	125A	150A	200A
	575V/60/3	40A	60A	50A	70A	125A	100A	125A	175A

CUSTOMER CONNECTION WIRE RANGE

NOTES:

A. BLOCK SIZE & DISCONNECT SIZE ARE CALCULATED BY SELECTING THE SIZE GREATER THAN OR EQUAL TO 1.15 X (SUM OF UNIT LOADS). SEE UNIT LITERATURE FOR UNIT LOAD VALUES.

UNITS WITH MAIN POWER TERMINAL BLOCK (ALL VOLTAGES)			UNITS WITH MAIN POWER DISCONNECT SWITCH (ALL VOLTAGES)		
BLOCK SIZE	WIRE QTY	CONNECTOR WIRE RANGE	DISCONNECT SIZE	WIRE QTY	CONNECTOR WIRE RANGE
335 AMP	(1)	#6 - 350 MCM	100 AMP	(1)	#14 - 1/0
760 AMP	(2)	#4 - 500 MCM	250 AMP	(1)	#4 - 350 kcmil
840 AMP	(2)	#2 - 600 MCM	400 AMP	(1) OR	#1 - 600 kcmil OR
				(2)	#1 - 250 kcmil
			600 AMP	(2)	250 - 500 MCM
			1000 AMP	(3)	3/0 - 500 kcmil

Figure 131. Unit internal fuse replacement data for air-cooled units, VAV

TRANE THIS DRAWING IS PROPRIETARY AND SHALL NOT BE COPIED OR ITS CONTENTS DISCLOSED TO OUTSIDE PARTIES WITHOUT THE CONSENT OF TRANE.		FILE NUMBER: 2313-1117	DRAWING NUMBER: 2313-1119	SHEET: 1 OF 1	REV A
DRAWN BY: K. EDWARDS	TRANE© DATE: 6/05/12	ROOFTOP PACKAGED AIR CONDITIONER DIAGRAM FIELD CONNECTION EXTERNAL DEVICES - AREA 5 20-130 TON VARIABLE AIR VOLUME			
REPLACES: 2313-1109-B	REVISION DATE: --				
CAD SYSTEM USED: Pro/DETAIL	SIMILAR TO: --				

NOTES:

19 FOR 50-60 TON WITH 0.50 KVA TRANSFORMER, 15A FUSE REPLACEMENT IS REQUIRED WITH 200V/230V/460V/575V UNIT VOLTAGE AND 20A FUSE REPLACEMENT IS REQUIRED WITH 380V/415V UNIT VOLTAGE.

29 SEE FUSE REPLACEMENT TABLE ON VFD PANEL FOR VFD POWER FUSES (F40, F41, F42).

FUSE REPLACEMENT TABLE

CONDENSER FAN FUSE 1F1 THRU 1F6 CLASS RK5	UNIT VOLTAGE	200V/60/3	230V/60/3	380V/50/3	415V/50/3	460V/60/3	575V/60/3
	TIME DELAY	25A	25A	15A	15A	15A	15A
OPTIONAL CONVENIENCE OUTLET FUSE 1F55 AND 1F56 (TIME DELAY TYPE FNQ-R FUSE)		12A	10A	N/A	N/A	5A	4A

COMPRESSOR PROTECTION FUSE 1F44 & 1F45 - TYPE MTH	6A	TRANSFORMER CIRCUIT FUSE 1F72-1F74 - TYPE FNQ-R	15A	ELECTRIC HEAT FUSE 4F19-4F36, 4F46-4F48 - CLASS K5	60A

CONTROL POWER FUSE

CONTROL (1T1) TRANSFORMER RATING		0.25 KVA	0.30 KVA	0.50 KVA	0.75 KVA	1.00 KVA	1.50 KVA
1F7 CLASS CC - TYPE FNQ-R	20-30 TON	6.25A	6.25A	--	10A	--	--
	40 TON	15A	20A	--	20A	--	--
	50-60 TON	--	--	15A/20A	--	20A	-- 19
	70-75 TON	--	--	--	--	15A	20A
	90-130 TON	--	--	--	--	15A	20A

VFD PROTECTION FUSES (CLASS "T" FUSES - 600V RATING) 29

OPTIONAL SUPPLY VFD 1F57-1F62 OPTIONAL EXHAUST / RETURN VFD 1F63-1F65

	UNIT VOLTAGE	3 HP	5 HP	7.5 HP	10 HP	15 HP	20 HP	25 HP	30 HP	40 HP	50 HP
BELT DRIVE MOTORS 20-130T UNITS	200V/60/3	40A	60A	80A	100A	150A	200A	225A	300A	350A	N/A
	230V/60/3	30A	45A	70A	90A	125A	175A	200A	250A	300A	N/A
	380V/50/3	15A	30A	45A	50A	90A	100A	125A	150A	200A	N/A
	415V/50/3	15A	30A	45A	50A	90A	100A	125A	150A	200A	N/A
	460V/60/3	15A	25A	35A	45A	60A	90A	100A	125A	150A	200A
	575V/60/3	15A	15A	25A	35A	50A	70A	80A	100A	125A	175A

	UNIT VOLTAGE	3 HP	5 HP	7.5 HP	10 HP	15 HP 1K-1.6K RPM	15 HP 1.7K-2.4K RPM	20 HP	25 HP	30 HP
OPTIONAL DIRECT DRIVE MOTORS 20-59T UNITS	200V/60/3	40A	60A	80A	100A	150A	150A	200A	225A	300A
	230V/60/3	30A	45A	70A	90A	125A	125A	175A	200A	250A
	460V/60/3	15A	25A	35A	45A	70A	60A	90A	100A	125A
	575V/60/3	15A	15A	25A	35A	50A	50A	70A	80A	100A

	UNIT VOLTAGE	10 HP	15 HP 1K-1.6K RPM	15 HP 1.7K-2.4K RPM	20 HP	30 HP 1K-1.6K RPM	30 HP 1.7K-2.4K RPM	40 HP	50 HP
OPTIONAL DIRECT DRIVE MOTORS 60-89T UNITS	200V/60/3	125A	175A	150A	200A	300A	300A	350A	N/A
	230V/60/3	90A	150A	125A	175A	250A	250A	300A	N/A
	460V/60/3	45A	70A	60A	90A	125A	125A	150A	200A
	575V/60/3	40A	60A	50A	70A	125A	100A	125A	175A

CUSTOMER CONNECTION WIRE RANGE

NOTES:

A. BLOCK SIZE & DISCONNECT SIZE ARE CALCULATED BY SELECTING THE SIZE GREATER THAN OR EQUAL TO 1.15 X (SUM OF UNIT LOADS). SEE UNIT LITERATURE FOR UNIT LOAD VALUES.

UNITS WITH MAIN POWER TERMINAL BLOCK (ALL VOLTAGES)			UNITS WITH MAIN POWER DISCONNECT SWITCH (ALL VOLTAGES)		
BLOCK SIZE	WIRE QTY	CONNECTOR WIRE RANGE	DISCONNECT SIZE	WIRE QTY	CONNECTOR WIRE RANGE
335 AMP	(1)	#6 - 350 MCM	100 AMP	(1)	#14 - 1/0
760 AMP	(2)	#4 - 500 MCM	250 AMP	(1)	#4 - 350 kcmil
840 AMP	(2)	#2 - 600 MCM	400 AMP	(1) OR	#1 - 600 kcmil OR
				(2)	#1 - 250 kcmil
			600 AMP	(2)	250 - 500 MCM
			1000 AMP	(3)	3/0 - 500 kcmil

Figure 132. Unit internal fuse replacement data for evaporative condensing units, CV & SZVAV

TRANE THIS DRAWING IS PROPRIETARY AND SHALL NOT BE COPIED OR ITS CONTENTS DISCLOSED TO OUTSIDE PARTIES WITHOUT THE CONSENT OF TRANE.		FILE NUMBER: 2313-1120	DRAWING NUMBER: 2313-1121	SHEET: 1 OF 1	REV A
DRAWN BY: K. EDWARDS	TRANE© DATE: 6/05/12	ROOFTOP PACKAGED AIR CONDITIONER DIAGRAM FIELD CONNECTION EXTERNAL DEVICES - AREA 5 24-89 TON CONSTANT VOLUME & SINGLE ZONE VAV			
REPLACES: 2313-1111-C	REVISION DATE: --				
CAD SYSTEM USED: Pro/DETAIL	SIMILAR TO: --				

FUSE REPLACEMENT TABLE						
CONDENSER FAN FUSE 1F1-1F3 CLASS CC TYPE FNQ-R	UNIT VOLTAGE	460V/60/3	COMPRESSOR PROTECTION FUSE 1F44 & 1F45 - TYPE MTH			460V/60/3
	TIME DELAY	8A				6A
TRANSFORMER CIRCUIT FUSE 1F72-1F74 - TYPE FNQ-R		15A	OPTIONAL SUMP HEATER FUSE 1F101-1F103 CLASS CC TYPE FNQ-R			5A
OPTIONAL CONVENIENCE OUTLET FUSE 1F55 AND 1F56 (TIME DELAY TYPE FNQ-R FUSE)		5A	OPTIONAL ELECTRIC HEAT FUSE 4F19-4F36, 4F46-4F48 - CLASS K5			60A
CONTROL POWER FUSE						
CONTROL (1T1) TRANSFORMER RATING		0.25 KVA	0.50 KVA	0.75 KVA	1.00 KVA	1.50 KVA
1F7 CLASS CC - TYPE FNQ-R	24-36 TON	6.25A	--	10A	--	--
	48 TON	15A	--	20A	--	--
	59-73 TON	--	15A	--	20A	--
	80-89 TON	--	--	--	15A	20A

VFD PROTECTION FUSES (CLASS "T" FUSES - 600V RATING) OPTIONAL SUPPLY VFD 1F57-1F62 OPTIONAL EXHAUST / RETURN VFD 1F63-1F65											
BELT DRIVE MOTORS 24-89T UNITS	UNIT VOLTAGE	3 HP	5 HP	7.5 HP	10 HP	15 HP	20 HP	25 HP	30 HP	40 HP	50 HP
	460V/60/3	15A	25A	35A	45A	60A	90A	100A	125A	150A	200A
OPTIONAL DIRECT DRIVE MOTORS 24-59T UNITS	UNIT VOLTAGE	3 HP	5 HP	7.5 HP	10 HP	15 HP 1K-1.6K RPM	15 HP 1.7K-2.4K RPM	20 HP	25 HP	30 HP	
	460V/60/3	15A	25A	35A	45A	70A	60A	90A	100A	125A	
OPTIONAL DIRECT DRIVE MOTORS 73-89T UNITS	UNIT VOLTAGE	10 HP	15 HP 1K-1.6K RPM	15 HP 1.7K-2.4K RPM	20 HP	30 HP	40 HP	50 HP			
	460V/60/3	45A	70A	60A	90A	125A	150A	200A			

CUSTOMER CONNECTION WIRE RANGE						
NOTES:	UNITS WITH MAIN POWER TERMINAL BLOCK (ALL VOLTAGES)			UNITS WITH MAIN POWER DISCONNECT SWITCH (ALL VOLTAGES)		
A. BLOCK SIZE & DISCONNECT SIZE ARE CALCULATED BY SELECTING THE SIZE GREATER THAN OR EQUAL TO 1.15 X (SUM OF UNIT LOADS). SEE UNIT LITERATURE FOR UNIT LOAD VALUES.	BLOCK SIZE	WIRE QTY	CONNECTOR WIRE RANGE	DISCONNECT SIZE	WIRE QTY	CONNECTOR WIRE RANGE
	335 AMP	(1)	#6 - 350 MCM	100 AMP	(1)	#14 - 1/0
	760 AMP	(2)	#4 - 500 MCM	250 AMP	(1)	#4 - 350 kcmil
	840 AMP	(2)	#2 - 600 MCM	400 AMP	(1) OR	#1 - 600 kcmil OR
					(2)	#1 - 250 kcmil
				600 AMP	(2)	250 - 500 MCM
				1000 AMP	(3)	3/0 - 500 kcmil

Figure 133. Unit internal fuse replacement data for evaporative condensing units, VAV

TRANE THIS DRAWING IS PROPRIETARY AND SHALL NOT BE COPIED OR ITS CONTENTS DISCLOSED TO OUTSIDE PARTIES WITHOUT THE CONSENT OF TRANE.		FILE NUMBER: 2313-1120	DRAWING NUMBER: 2313-1122	SHEET: 1 OF 1	REV A
DRAWN BY: K. EDWARDS	TRANE© DATE: 6/05/12	ROOFTOP PACKAGED AIR CONDITIONER DIAGRAM FIELD CONNECTION EXTERNAL DEVICES - AREA 5 24-89 TON VARIABLE AIR VOLUME			
REPLACES: 2313-1112-B	REVISION DATE: --				
CAD SYSTEM USED: Pro/DETAIL	SIMILAR TO: --				

FUSE REPLACEMENT TABLE						
CONDENSER FAN FUSE 1F1-1F3 CLASS CC TYPE FNQ-R	UNIT VOLTAGE	460V/60/3		COMPRESSOR PROTECTION FUSE 1F44 & 1F45 - TYPE MTH		460V/60/3
	TIME DELAY	8A				6A
TRANSFORMER CIRCUIT FUSE 1F72-1F74 - TYPE FNQ-R		15A		OPTIONAL SUMP HEATER FUSE 1F101-1F103 CLASS CC TYPE FNQ-R		5A
OPTIONAL CONVENIENCE OUTLET FUSE 1F55 AND 1F56 (TIME DELAY TYPE FNQ-R FUSE)		5A		OPTIONAL ELECTRIC HEAT FUSE 4F19-4F36, 4F46-4F48 - CLASS K5		60A
CONTROL POWER FUSE						
CONTROL (1T1) TRANSFORMER RATING		0.25 KVA	0.50 KVA	0.75 KVA	1.00 KVA	1.50 KVA
1F7 CLASS CC - TYPE FNQ-R	24-36 TON	6.25A	--	10A	--	--
	48 TON	15A	--	20A	--	--
	59-73 TON	--	15A	--	20A	--
	80-89 TON	--	--	--	15A	20A

VFD PROTECTION FUSES (CLASS "T" FUSES - 600V RATING) OPTIONAL SUPPLY VFD 1F57-1F62 OPTIONAL EXHAUST / RETURN VFD 1F63-1F65											
BELT DRIVE MOTORS 24-89T UNITS	UNIT VOLTAGE	3 HP	5 HP	7.5 HP	10 HP	15 HP	20 HP	25 HP	30 HP	40 HP	50 HP
	460V/60/3	15A	25A	35A	45A	60A	90A	100A	125A	150A	200A
OPTIONAL DIRECT DRIVE MOTORS 24-59T UNITS	UNIT VOLTAGE	3 HP	5 HP	7.5 HP	10 HP	15 HP 1K-1.6K RPM	15 HP 1.7K-2.4K RPM	20 HP	25 HP	30 HP	
	460V/60/3	15A	25A	35A	45A	70A	60A	90A	100A	125A	
OPTIONAL DIRECT DRIVE MOTORS 73-89T UNITS	UNIT VOLTAGE	10 HP	15 HP 1K-1.6K RPM	15 HP 1.7K-2.4K RPM	20 HP	30 HP	40 HP	50 HP			
	460V/60/3	45A	70A	60A	90A	125A	150A	200A			

CUSTOMER CONNECTION WIRE RANGE						
NOTES:	UNITS WITH MAIN POWER TERMINAL BLOCK (ALL VOLTAGES)			UNITS WITH MAIN POWER DISCONNECT SWITCH (ALL VOLTAGES)		
A. BLOCK SIZE & DISCONNECT SIZE ARE CALCULATED BY SELECTING THE SIZE GREATER THAN OR EQUAL TO 1.15 X (SUM OF UNIT LOADS). SEE UNIT LITERATURE FOR UNIT LOAD VALUES.	BLOCK SIZE	WIRE QTY	CONNECTOR WIRE RANGE	DISCONNECT SIZE	WIRE QTY	CONNECTOR WIRE RANGE
	335 AMP	(1)	#6 - 350 MCM	100 AMP	(1)	#14 - 1/0
	760 AMP	(2)	#4 - 500 MCM	250 AMP	(1)	#4 - 350 kcmil
	840 AMP	(2)	#2 - 600 MCM	400 AMP	(1) OR	#1 - 600 kcmil OR
					(2)	#1 - 250 kcmil
				600 AMP	(2)	250 - 500 MCM
				1000 AMP	(3)	3/0 - 500 kcmil

Table 73. Filter data

Unit Model (AC/EC)	Panel-Type Filters[a]		Bag-Type Filters[b]		Cartridge Filters (Pre-Evap and Final) (box-type)[b]		Panel-Type Prefilters (Pre-Evap and Final)[c]	
	Qty	Size of each	Qty.	Size of each	Qty. (Pre-Evap/ Final Filter)	Size of each	Qty. (Pre-Evap/ Final Filter)	Size of each
20 & 25 / 24 & 29 ton	12	20 X 20 X 2	4	12 X 24 X 19	4/4	12 X 24 X 12	4/4	12 X 24 X 2
			3	24 X 24 X 19	3/3	24 X 24 X 12	3/3	24 X 24 X 2
30/36 ton	16	20 X 20 X 2	2	12 X 24 X 19	2/1	12 X 24 X 12	2/1	12 X 24 X 2
			6	24 X 24 X 19	6/6	24 X 24 X 12	6/6	24 X 24 X 2
40/48 ton	16	20 X 25 X 2	5	12 X 24 X 19	5/5	12 X 24 X 12	5/1	12 X 24 X 2
			6	24 X 24 X 19	6/6	24 X 24 X 12	6/6	24 X 24 X 2
50, 55 / 59 ton	20	20 X 25 X 2	3	12 X 24 X 19	3/2	12 X 24 X 12	3/2	12 X 24 X 2
			9	24 X 24 X 19	9/9	24 X 24 X 12	9/9	24 X 24 X 2
60, 70 & 75 / 73, 80 & 89 ton	35	16 X 20 X 2	6	12 X 24 X 19	6/6	12 X 24 X 12	6/6	12 X 24 X 2
			8	24 X 24 X 19	8/8	24 X 24 X 12	8/8	24 X 24 X 2
90-130	25	24 X 24 X 2	3	12 X 24 X 19	3/5	12 X 24 X 12	3/5	20 X 24 X 2
			15	24 X 24 X 19	15/10	24 X 24 X 12	15/10	24 X 24 X 2

(a) Dimensions shown for “Panel-Type Filters” apply to “Throw away”, “Cleanable Wire Mesh”, and “High Efficiency Throw away” Filters.
(b) S_HL units ordered with “Bag-Type Filters” or “Cartridge Filters” (box-type) include a bank of “Panel-Type Prefilters”
(c) The same “Panel-Type Prefilters” are used with “Bag-Type” and “Cartridge (box-type)” filters.

Table 74. “Wet heat” coil fin data

Unit Model (AC/EC)	Coil Type	Coil Rows	Total Coil Face Area (sq. ft.)	Fins per Foot	Fins per Foot
20, 25, 30 / 24, 29, 36 ton	WC Prima Flo (hot water)	2	13.75	80	110
40, 50, 55 / 48, 59 ton	WC Prima Flo (hot water)	2	19.25	80	110
60, 70, 75 / 73, 80, 89 ton	WC Prima Flo (hot water)	2	26.25	80	110
40, 50 / 48, 59 ton	NS (steam)	1	13.75 (1) 5.5 (1)	42	96
90-130 ton	NS (steam)	1	17.5 (2)	52	96

Note: To determine unit heating capacity (i.e. “low heat” or “high heat”), see digit 9 of the model number stamped on the unit nameplate.

Table 75. Grease recommendations

Recommended Grease	Recommended Operating Range
Exxon Unirex #2 Mobil 532 Mobil SHC #220 Texaco Premium	-20°F to 205°F

Table 76. Refrigerant coil fin data

Tonnage	Evaporator Coil			Condenser Coil		
	Size (ft2)	Rows/Fin Series	Tube Diameter/ Surface	Size (ft2)	Rows/Fin Series	Type
20	20.3	4/168	1/2/Enhanced	58	3/252	5/16/Enhanced
25	20.3	4/168	1/2/Enhanced	58	3/252	5/16/Enhanced
30	25.5	5/168	3/8”/Enhanced	58	4/252	5/16/Enhanced
40	32.5	5/168	3/8”/Enhanced	116	3/252	5/16/Enhanced
50, 55	38	4/168	1/2/Enhanced	116	4/252	5/16/Enhanced
60	43	6/168	3/8”/Enhanced	136	3/252	5/16/Enhanced
70	43	6/168	3/8”/Enhanced	136	3/252	5/16/Enhanced
75	43	6/168	3/8”/Enhanced	136	3/252	5/16/Enhanced

Table 76. Refrigerant coil fin data (continued)

Tonnage	Evaporator Coil			Condenser Coil		
	Size (ft2)	Rows/Fin Series	Tube Diameter/ Surface	Size (ft2)	Rows/Fin Series	Type
90 Std	59.3	4/148	1/2 / Enhanced	152	2/276	Microchannel
90 Hi Cap/Hi Eff	59.3	6/148	1/2 / Enhanced	152	2/276	Microchannel
105 Hi	59.3	5/148	1/2 / Enhanced	152	2/276	Microchannel
115 Std	59.3	6/148	1/2 / Enhanced	152	2/276	Microchannel
130 Std	59.3	6/148	1/2 / Enhanced	152	2/276	Microchannel

Fan Belt Adjustment

FC supply fan belts and optional exhaust fan belts must be inspected periodically to assure proper unit operation. Optional DDP supply fans do not have belts, and therefore do not require this maintenance.

Replacement is necessary if the belts appear frayed or worn. Units with dual belts require a matched set of belts to ensure equal belt length.

When removing or installing the new belts, do not stretch them over the sheaves. Loosen the belts using the belt tension adjustment bolts on the motor mounting base.

Once the new belts are installed, using a Browning or Gates tension gauge (or equivalent) illustrated below, adjust the belt tension as follows:

⚠WARNING

Hazardous Voltage!

Disconnect all electric power, including remote disconnects before servicing. Follow proper lockout/ tagout procedures to ensure the power can not be inadvertently energized. Failure to disconnect power before servicing could result in death or serious injury.

1. Determine the appropriate belt deflection:
   a. Measure the center-to-center shaft distance (in inches) between the fan and motor sheaves.
   b. Divide the distance measured in Step 1a by 64; the resulting value represents the amount of belt deflection that corresponds to the proper belt tension.
2. Set the large O-ring on the belt tension gauge at the deflection value determined in Step 1b.
3. Set the small O-ring at zero on the force scale of the gauge plunger.
4. Place the large end of the gauge at the center of the belt span; then depress the gauge plunger until the large O-ring is even with the top of the next belt—or even with a straightedge placed across the fan and motor sheaves. Refer to Figure 135.

Figure 134. Browning (or Gates) tension gauge

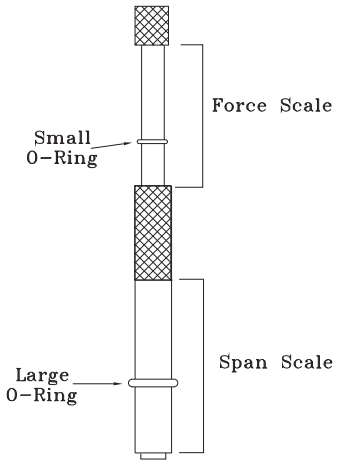

5. Remove the belt tension gauge. The small O-ring now indicates a number other than zero on the plunger's force scale. This number represents the force (in pounds) required to give the needed deflection.
6. Compare the "force" scale reading (Step 5) with the appropriate "force" value listed in Figure 135. If the "force" reading is outside the range, readjust the belt tension.

Note: Actual belt deflection "force" must not exceed the maximum "force" value shown in Figure 135.

7. Recheck the belt tension at least twice during the first 2 to 3 days of operation. Belt tension will decrease rapidly until the new belts are "run in."

Table 77. Belt tension measurement and deflection ranges

Belts Cross Section	Small P.D. Range	Deflection Force (lbs.)				Steel Cable Gripbelts	
		Super Gripbelts		Gripnotch			
		Min.	Max.	Min	Max.	Min	Max
A	3.0–3.6	3	4 1/2	3 7/8	5 1/2	3 1/4	4
	3.8–4.8	3 1/2	5	4 1/2	6 1/4	3 3/4	4 3/4
	5.0–7.0	4	5 1/2	5	6 7/8	4 1/4	5 1/4
B	3.4–4.2	4	5 1/2	5 3/4	8	4 1/2	5 1/2
	4.4–5.6	5 1/8	7 1/8	6 1/2	9 1/8	5 3/4	7 1/4
	5.8–8.8	6 3/8	8 3/4	7 3/8	10 1/8	7	8 3/4

Belts Cross Section	Small P.D. Range	Deflection Force (lbs.)			
		358 Gripbelts		358 Gripnotch	
		Min.	Max.	Min	Max.
5V	4.4–8.7	—	—	10	15
	7.1–10.9	10 1/2	15 3/4	12 7/8	18 3/4
	11.8–16.0	13	19 1/2	15	22

Figure 135. Belt deflection

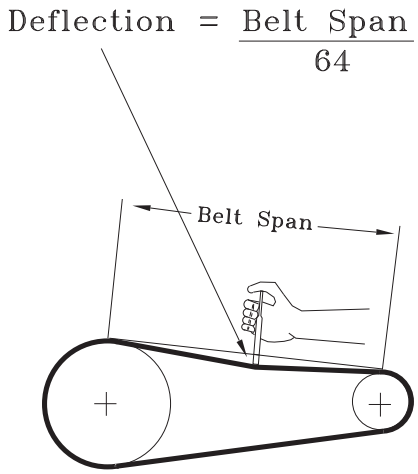

⚠WARNING

NO STEP SURFACE!

Do not walk on the discharge grate. Walking on the grate could cause the supporting metal to collapse, resulting in the operator/technician to fall. Failure to follow this recommendation could result in death or serious injury.

Scroll Compressor Replacement

The compressor manifold system was purposely designed to provide proper oil return to each compressors. The refrigerant manifold system must not be modified in any way.

Note: Altering the compressor manifold piping may cause oil return problems and compressor failure.

Should a compressor replacement become necessary and a suction line filter drier is to be installed, install it a minimum of 16 or 25 inches upstream of the oil separator tee. See Figure 141, p. 176.

Note: Do Not release refrigerant to the atmosphere! If adding or removing refrigerant is required, the service technician must comply with all Federal, State and local laws. Refer to general service bulletin MSCU-SB-1 (latest edition).

Refrigeration System

⚠WARNING

R-410A Refrigerant under Higher Pressure than R-22!

The units described in this manual use R-410A refrigerant which operates at higher pressures than R-22 refrigerant. Use ONLY R-410A rated service equipment or components with these units. For specific handling concerns with R-410A, please contact your local Trane representative.
Failure to use R-410A rated service equipment or components could result in equipment exploding under R-410A high pressures which could result in death, serious injury, or equipment damage.

⚠WARNING

Refrigerant under High Pressure!

System contains oil and refrigerant under high pressure. Recover refrigerant to relieve pressure before opening the system. See unit nameplate for refrigerant type. Do not use non-approved refrigerants, refrigerant substitutes, or refrigerant additives. Failure to recover refrigerant to relieve pressure or the use of non-approved refrigerants, refrigerant substitutes, or refrigerant additives could result in an explosion which could result in death or serious injury or equipment damage.

Refrigerant Evacuation and Charging

The unit is fully charged with R-410A refrigerant from the factory. However if it becomes necessary to remove or recharge the system with refrigerant, it is important that the following actions are taken. Failure to do so may cause permanent damage to the compressor.

Charge Storage

Due to the reduced capacity of the microchannel condenser coil compared to the round tube plate fin evaporator coil, pumping refrigerant into the condenser coil to service the refrigerant system is no longer an option.

NOTICE:

Compressor Damage!

In order to prevent compressor damage, you MUST follow recommendations below:

Important: Do NOT release refrigerant to the atmosphere! If adding or removing refrigerant is required, the service technician must comply with all federal, state, and local laws.

- To prevent cross contamination of refrigerants and oils, use only dedicated R-410A service equipment.
- Disconnect unit power before evacuation and do not apply voltage to compressor while under vacuum. Failure to follow these instructions will result in compressor failure.
- Due to the presence of POE oil, minimize system open time. Do not exceed 1 hour.
- When recharging R-410A refrigerant, it should be charged in the liquid state.
- For the initial charging with the compressors off; charging to the liquid line is required to minimize starting the compressors with liquid refrigerant in the compressor oil sump.
- If suction line charging is needed to complete the charging process, only do so with the compressor operating.
- Allow the crankcase heater to operate a minimum of 8 hours before starting the unit.

Compressor Oil

The appropriate oil charge for a 7.5 ton scroll compressor is 6.3 pints. For 9 through 15 ton light commercial scroll compressors is 7 pints. For a 15, 20 and 25 ton large commercial scroll compressors (75 ton units), use 14.2 pints. Variable speed VZH117 oil charge is 7.6 pints and VZH170 is 14.2 pints.

Remove and measure oil from any compressor replaced. Adjust oil in replacement compressor to prevent excessive oil in system.

Scroll Compressor Replacements

Discoloration of the oil indicates that an abnormal condition has occurred. If the oil is dark and smells burnt, it has overheated because of the following:

- Compressor operating at extremely high condensing temperatures
- High superheat
- A compressor mechanical failure
- Occurrence of a motor burnout.

If a motor burnout is suspected, use an acid test kit (KIT15496) to check the condition of the oil. Test results will indicate an acid level has exceeded the limit if a burnout occurred. Oil test kits must be used for POE oil (OIL00079 for a quart container or OIL00080 for a gallon container) to determine whether the oil is acidic. If a motor burnout has occurred, change the oil in both compressors in a tandem set.

CSHD Compressors (20 to 70 and 80 Ton)

For CSHD compressors this will require that the oil be removed using a suction or pump device through the oil equalizer Rotolock fitting, see Figure 136. Use a dedicated device for removing oil. It is good practice to flush the suction device with clean oil prior to use.

Place a catch pan under the oil equalizer Rotolock connection fitting on the compressor to catch the oil that will come out of the compressor when the oil equalizer tube is removed from the compressor.

Prior to reinstalling the oil equalizer line to each compressor, replace the PTFE gasket on the oil equalizer Rotolock fitting on each compressor. See Figure 137, p. 175. Torque Rotolock nut to the values listed in Table 79, p. 175.

Charge the new oil into the Schrader valve on the shell of the compressor. Due to the moisture absorption properties of POE oil, do not use POE oil from a previously opened container. Also discard any excess oil from the container that is not used.

CSHN Compressors (75 and 89 to130 Ton)

CSHN compressors have an oil drain valve, See Figure 138, which allows the oil to be drained out of the compressor. After the refrigerant has been recovered, pressurize the system with nitrogen to help remove the oil from the compressor.

Figure 136. CSHD

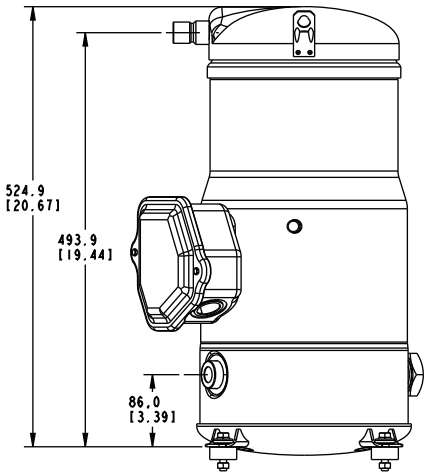

Figure 137. PTFE gasket

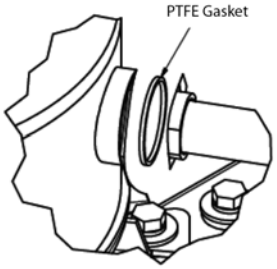

Charge the new oil into the Schrader valve or oil drain valve on the shell of the compressor. Due to the moisture absorption properties of POE oil, do not use POE oil from a previously opened container. Also discard any excess oil from the container that is not used.

Figure 138. CSHN

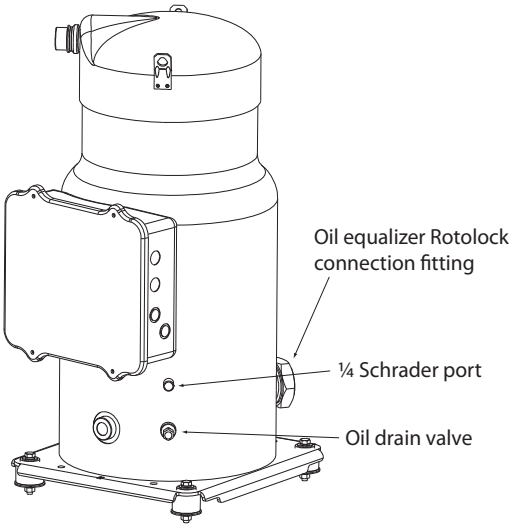

VZH Compressors (40 to 70 Ton Variable Speed)

Refer to the proceeding CSHD section for VZH117 oil removal procedures and the proceeding CSHN section for VZH170 oil removal procedures.

VZH variable speed compressors include the addition of an oil injection solenoid valve (2L11) to provide supplemental oil flow from an internal gear pump to the scroll thrust bearing surface. The solenoid is de-energized at low compressor speeds to allow supplemental oil flow and ensure thrust surface lubrication. The solenoid is energized at high compressor speeds to stop supplemental lubrication. This prevents excessive oil circulation to the system. The solenoid is controlled by the inverter and switches at 3300RPM for the VZH117, and 2700 RPM for the VZH170.

Figure 139. Oil injection solenoid valve

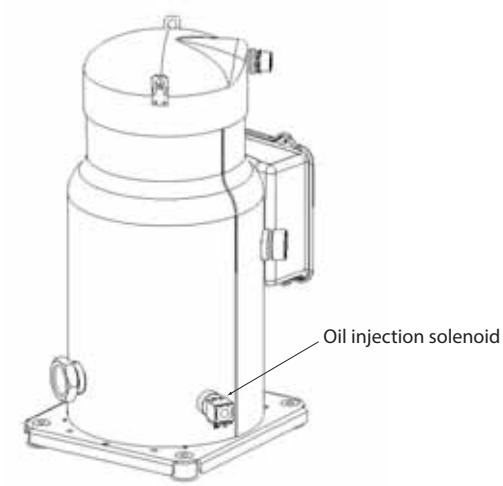

The 24 VAC solenoid coil operation can be checked on one of the solenoid leads with a clamp on amp meter. Above 3300 RPM (VZH117) /2700 RPM (VZH170), the amp meter should read about 0.5 amps to indicate supplemental flow has been stopped.

Table 78. Oil charge per compressor

Compressor	Pints
CSHD 092	6.3
CSHD 110 thru 183 and VZH117	7.0
CSHN 176 thru 315 and VZH170	14.2

Table 79. Torque requirements for rotolock fittings

CSHD* and VZH117	64 +/- 12 ft-lbs
CSHN* and VZH170	100 +/- 10 ft-lbs

Note: Always replace gasket when reassembling oil equalizer lines.

Electrical Phasing:

If it becomes necessary to replace a compressor, it is very important to review and follow the Electrical Phasing procedure described in the startup procedure of the IOM.

If the compressors are allowed to run backward for even a very short period of time, internal compressor damage may occur and compressor life may be reduced. If allowed to run backwards for an extended period of time the motor windings can overheat and cause the motor winding thermostats to open. This will cause a “compressor trip” diagnostic and stop the compressor

If a scroll compressor is rotating backwards, it will not pump and a loud rattling sound can be observed. Check the electrical phasing at the compressor terminal box. If the phasing is correct, before condemning the compressor, interchange any two leads to check the internal motor phasing.

Precision Suction Restrictor:

Tandem manifold compressors that have unequal capacity sizes utilize a precision suction restrictor to balance the oil levels in the compressors. For tandem manifold compressors in Intellipak units, this restrictor is placed in the compressor indicated in Table 80. When replacing this compressor, it is imperative that the proper restrictor is selected from those provided with the replacement compressor.

When the compressors are restarted verify that correct oil levels are obtained with both compressors operating.

Figure 140. Precision suction restrictor

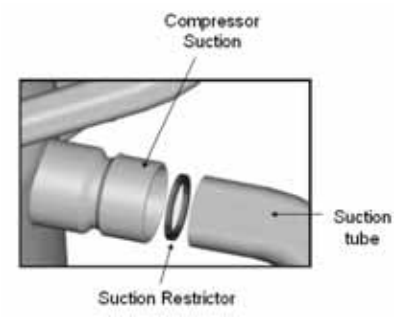

Table 80. Suction restrictor location (AC/EC)

25 ton Std Cap	CSHD125	60 ton Std Cap	CSHD142
25 & 29 ton High Cap	CSHD125	75 ton Std Cap	CSHN176
30 & 36 ton High Cap	CSHD161	75 & 89 ton High Cap	CSHN184

Table 80. Suction restrictor location (AC/EC)

25 ton Std Cap	CSHD125	60 ton Std Cap	CSHD142
40 ton Std Cap	CSHD110	105 ton High Cap	CSHN250
50 ton Std Cap	CSHD120	115 ton High Cap	CSHN250

Suction Line Filter/Drier

Figure 141. Suction line filter/drier installation

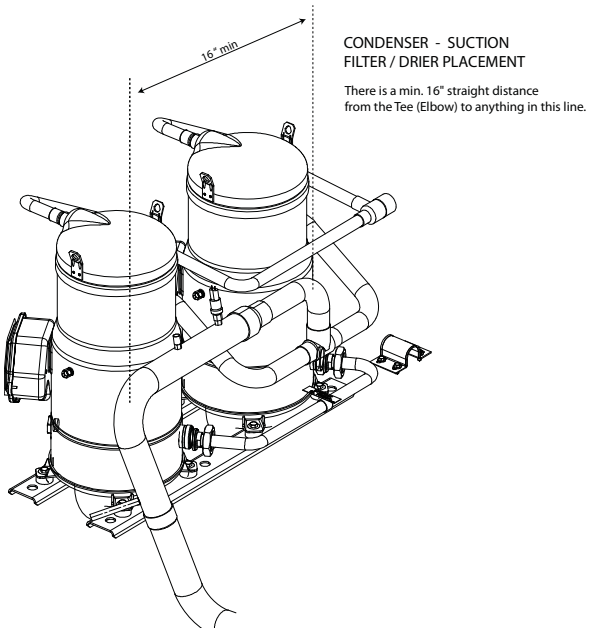

Table 81. Supply and exhaust/return fan VFD programming parameters

Menu	ID	Name	FC	DDP	Unit
Operation/Display	0-01	Language	English US	English US	
	0-03	Regional Settings	North America	North America	
	0-06 (TR150 only)	Grid Type	Set to applicable unit power supply 200-240V/60Hz for 200 & 230V/60Hz units; 440-480V/60Hz for 460V/60Hz units; 525-600V/60Hz for 575V/60Hz units; 380-440V/50Hz for 380 & 415V/50Hz supply. For IT Grid (no ground connections) or corner-grounded Delta power supply systems, select the applicable voltage/Hz and IT-Grid or Delta.		
	0-20 (TR200 only)	Display Line 1.1 Small	Analog Input 53	Analog Input 53	
	0-22 (TR200 only)	Display Line 1.3 Small	Input Power [hp]	Input Power [hp]	
	0-40	[Hand on] Key on LCP	Disabled	Disabled	

Table 81. Supply and exhaust/return fan VFD programming parameters (continued)

Menu	ID	Name	FC	DDP	Unit
Load and Motor	1-03	Torque Characteristics	Variable Torque	Variable Torque	
	1-20 (TR150) 1-21 (TR200)	Motor Power [HP]	Per Motor Nameplate HP	Sum of HP Per Motor Nameplate HP [dual motors on 60-75T]	hp
	1-22	Motor Voltage	Per Motor Nameplate Voltage	Per Motor Nameplate Voltage	V
	1-23	Motor Frequency	Per Motor Nameplate	Per Motor Nameplate	Hz
	1-24	Motor Current	Per Motor Nameplate FLA	Sum of FLA Per Motor Nameplate FLA [dual motors on 60-75T]	A
	1-25	Motor Nominal Speed	Per Motor Nameplate Rated Speed	Per Motor Nameplate Rated Speed	RPM
	1-39	Motor Poles	4	6 if Motor Nameplate Rated Speed ~1200 RPM 4 if Motor Nameplate Rated Speed > 1200 RPM	
	1-73	Flying Start	Enabled	Enabled	
	1-90	Motor Thermal Protection	ETR Trip1	ETR Trip1	
Brakes	2-00	DC Hold/Preheat Current	0	0	%
	2-01	DC Brake Current	0	0	%
	2-04	DC Brake Cut In Speed [Hz]	10	10	Hz
Reference / Ramps	3-03	Maximum Reference	60	83	Hz
	3-16	Reference 2 Source	No function	No function	
	3-17	Reference 3 Source	No function	No function	
	3-41	Ramp 1 Ramp up Time	30	30	s
	3-42	Ramp 1 Ramp Down Time	30	30	s
Limits / Warnings	4-12	Motor Speed Low Limit [Hz]	22	15	Hz
	4-14	Motor Speed High Limit [Hz]	60	83	Hz
	4-18	Current Limit	100	100	%
	4-19	Max Output Frequency	60	120	Hz
Digital In/Out	5-12	Terminal 27 Digital Input	Coast inverse	Coast inverse	
	5-13	Terminal 29 Digital Input	No operation	No operation	
	5-40	Function Relay	Relay 1 active No alarm, Relay 2 active Motor Running (Relay 1 [160], Relay 2 [5])	Relay 1 active No alarm, Relay 2 active Motor Running (Relay 1 [160], Relay 2 [5])	
Analog In/Out	6-14	Terminal 53 Low Ref./ Feedb. Value	22	15	
	6-15	Terminal 53 High Ref./ Feedb. Value	60	83	

Table 81. Supply and exhaust/return fan VFD programming parameters (continued)

Menu	ID	Name	FC	DDP	Unit
Special Function	14-01	Switching Frequency	8.0 kHz (drive dependant, set to 5kHz if 8kHz not available)	8.0 kHz (drive dependant, set to 5kHz if 8kHz not available)	
	14-11 (TR200 only)	Mains Voltage at Mains Fault	400V for 460V 60Hz unit, leave at default otherwise	400V for 460V 60Hz unit, leave at default otherwise	
	14-12	Function at Mains Imbalance	Derate	Derate	
	14-20	Reset Mode	Automatic reset x 5	Automatic reset x 5	
	14-50	RFI Filter	Off	Off	
	14-60 (TR200 only)	Function at Over Temperature	Derate	Derate	
	14-61 (TR200 only)	Function at Inverter Overload	Derate	Derate	

Note: For 50Hz units parameters 0-06 Grid Type (TR150s only) and 1-23 Motor Freq will need to be set accordingly.

⚠WARNING

Hazardous Voltage w/Capacitors!

Disconnect all electric power, including remote disconnects and discharge all motor start/run capacitors before servicing. Follow proper lockout/tagout procedures to ensure the power cannot be inadvertently energized. For variable frequency drives or other energy storing components provided by Trane or others, refer to the appropriate manufacturer's literature for allowable waiting periods for discharge of capacitors. Verify with an appropriate voltmeter that all capacitors have discharged. Failure to disconnect power and discharge capacitors before servicing could result in death or serious injury.

For additional information regarding the safe discharge of capacitors, see PROD-SVB06A-EN.

eFlex™ Compressor VFD Programming Parameters

A factory-shipped VFD should not be modified in the field. It is specifically matched to the compressor.

Should replacing a VFD become necessary, only parameter 4-18 Current Limit requires setting on the VFD, refer to Table 82. All other parameters beside 4-18 Current Limit will be appropriately set in field replacement VFDs. Do not use any other type or brand of VFD when replacing the VFD.

Note: Failure to set parameter 4-18 Current Limit on a field replacement VFD will not allow the compressor to start and result in A18 Start Failed or A49 Speed Limit on the VFD.

To verify and/or set parameter 4-18 in the Compressor VFD:

1. Press [Quick Menu].
2. Press [My Personal Menu].
3. Navigate through the options using the up and down arrows to find [4-18 Current Limit].
4. Adjust the current limit percentage value per unit tonnage and voltage as shown in Table 82.
5. Press [OK].

Table 82. Compressor VFD programming parameter 4-18

Unit Tonnage	200-240V	380-480V	525-600V
40	100%	100%	100%
50	100%	100%	100%
55	100%	100%	100%
60	110%	110%	110%
70	110%	110%	110%

Supply and Exhaust Fan VFD Programming Parameters

Units shipped with an optional variable frequency drive (VFD) are preset and run tested at the factory. If a problem with a VFD occurs, ensure that the programmed parameters listed in Table 81 have been set before replacing the drive.

Note: Check to make sure that parameter 1-23 is set to 60 Hz (or 50 Hz where applicable) and that parameter 0-06 is set to the correct supply voltage/frequency range. To check parameter 1-23, press the [Main Menu] button (twice if TR150 drive) (press [Back] button if the main menu does not display), use the [▼] button to scroll down to Load & Motor, press OK, use the [▼] button to select 1-2, press OK, and finally use the [▼] button until parameter 1-23 is displayed. Parameter 1-23 can then be modified by pressing the OK button and using [▲] and [▼] buttons. When the desired selection has been made, press the OK button.

If replacing a VFD becomes necessary, the replacement is not configured with all of Trane's operating parameters. The VFD must be programmed before attempting to operate the unit.

To verify and/or program a VFD, use the following steps:

1. At the unit, turn the 115 volt control circuit switch 1S70 to the Off position.
2. Turn the 24 volt control circuit switch to the Off position.

⚠WARNING

Live Electrical Components!

During installation, testing, servicing and troubleshooting of this product, it may be necessary to work with live electrical components. Have a qualified licensed electrician or other individual who has been properly trained in handling live electrical components perform these tasks. Failure to follow all electrical safety precautions when exposed to live electrical components could result in death or serious injury.

HIGH VOLTAGE IS PRESENT AT TERMINAL BLOCK 1TB1 OR UNIT DISCONNECT SWITCH 1S14.

3. To modify parameters:
   a. Press Main Menu button (twice if TR150 drive) (press [Back] button if the main menu does not display)
   b. Use the [▲] and [▼] buttons to find the parameter menu group (first part of parameter number)
   c. Press [OK]
   d. Use [▲] and [▼] buttons to select the correct parameter sub-group (first digit of second part of parameter number)
   e. Press [OK]
   f. Use [▲] and [▼] buttons to select the specific parameter
   g. Press [OK]
   h. To move to a different digit within a parameter setting, use the [<] and [>] buttons (Highlighted area indicates digit selected for change)
   i. Use [▲] and [▼] buttons to adjust the digit
   j. Press [Cancel] button to disregard change, or press [OK] to accept change and enter the new setting
4. Repeat step 3 for each menu selection setting in Table 81.
5. To reset programming parameters back to the factory defaults:
   a. Go to parameter 14-22 Operation Mode
   b. Press [OK]
   c. Select "Initialization"
   d. Press [OK]
   e. Cut off the mains supply and wait until the display turns off.
   f. Reconnect the mains supply—the frequency converter is now reset.
   g. Ensure parameter 14-22 Operation Mode has reverted back to "Normal Operation".

Notes:

- *Item 5 resets the drive to the default factory settings. The program parameters listed in Table 81 will need to be verified or changed as described in Item 3 and 4.*
- *Some of the parameters listed in the Table are motor specific. Due to various motors and efficiencies available, use only the values stamped on the specific motor nameplate. Do not use the Unit nameplate values.*
- *A backup copy of the current setup may be saved to the LCP before changing parameters or resetting the drive using parameter 0-50 LCP Copy (All to LCP to save all parameters to keypad and All from LCP to download all parameters into drive/replacement drive). See LCP Copy in the VFD Operating Instructions for details.*

6. Follow the start-up procedures for supply fan in the "Variable Air Volume System" section or the "Exhaust/return Airflow Measurement" start-up procedures for the exhaust/return fan.
7. After verifying that the VFD(s) are operating properly, press the STOP key at the human interface module to stop the unit operation.
8. Follow the applicable steps in the "Final Unit Checkout" section to return the unit to its normal operating mode.

Monthly Maintenance

Before completing the following checks, turn the unit OFF and lock the main power disconnect switch open.

⚠WARNING

Hazardous Voltage!

Disconnect all electric power, including remote disconnects before servicing. Follow proper lockout/tagout procedures to ensure the power can not be inadvertently energized. Failure to disconnect power before servicing could result in death or serious injury.

Filters

- Inspect the return air and final filters. Clean or replace them if necessary.
- Refer to the Table 73, p. 171 for filter information.

Cooling Season

- Check the unit's drain pans and condensate piping to ensure that there are no blockages.
- Inspect the evaporator and condenser coils for dirt, bent fins, etc. If the coils appear dirty, clean them according to the instructions described in "Coil Cleaning" later in this section.
- Manually rotate the condenser fans to ensure free movement and check motor bearings for wear. Verify that all of the fan mounting hardware is tight.

- Inspect the F/A-R/A damper hinges and pins to ensure that all moving parts are securely mounted. Keep the blades clean as necessary.
- Verify that all damper linkages move freely; lubricate with white grease, if necessary.
- Check supply fan motor bearings; repair or replace the motor as necessary. If the unit model number indicates that the motor has an internal shaft ground, replace with the same motor type.
- For FC fans only, check the fan shaft bearings for wear. Replace the bearings as necessary.
- For FC fans only, lubricate the supply fan shaft bearings with a lithium based grease. Refer to Table 75, p. 171 for recommended greases.

Note: The bearings are manufactured using a special synthetic lithium based grease designed for long life and minimum lube intervals. Over lubrication can be just as harmful as not enough.

- For FC fans only, use a hand grease gun to lubricate these bearings; add grease until a light bead appears all around the seal. Do not over lubricate!
- For FC fans only, after greasing the bearings, check the setscrews to ensure that the shaft is held securely to the bearings and fan wheels. Make sure that all bearing supports are tight.
- For FC fans only, check the supply fan belt(s). If the belts are frayed or worn, replace them. Refer to the "Fan Belt Adjustment" section for belt replacement and adjustments.
- Check the condition of the gasket around the control panel doors. These gaskets must fit correctly and be in good condition to prevent water leakage.
- Verify that all wire terminal connections are tight.
- Remove any corrosion present on the exterior surfaces of the unit and repaint these areas.
- Generally inspect the unit for unusual conditions (e.g., loose access panels, leaking piping connections, etc.)
- Make sure that all retaining screws are reinstalled in the unit access panels once these checks are complete.
- With the unit running, check and record the following:
  - ambient temperature
  - compressor oil level (each circuit)
  - compressor suction and discharge pressures (each circuit)
  - superheat and subcooling (each circuit)

  Record this data on an "operator's maintenance log" like the one shown in Table 84, p. 185. If the operating pressures indicate a refrigerant shortage, measure the system superheat and system subcooling. For guidelines, refer to "Charging by Subcooling".

Important: Do NOT release refrigerant to the atmosphere! If adding or removing refrigerant is required, the service technician must comply with all federal, state and local laws. Refer to general service bulletin MSCU-SB-1 (latest edition).

Heating Season

Before completing the following checks, turn the unit OFF and lock the main power disconnect switch open.

⚠WARNING

Hazardous Voltage!

Disconnect all electric power, including remote disconnects before servicing. Follow proper lockout/tagout procedures to ensure the power can not be inadvertently energized. Failure to disconnect power before servicing could result in death or serious injury.

- Inspect the unit's air filters. If necessary, clean or replace them.
- Check supply fan motor bearings; repair or replace the motor as necessary. If the unit model number indicates that the motor has an internal shaft ground, replace with the same motor type.
- Lubricate the supply fan shaft bearings with a lithium based grease. Refer to Table 75, p. 171 for recommended greases.

Note: The bearings are manufactured using a special synthetic lithium based grease designed for long life and minimum lube intervals. Too much lubrication in a bearing can be just as harmful as not enough.

- Use a hand grease gun to lubricate the bearings; add grease until a light bead appears all around the seal. Do not over lubricate.
- After greasing the bearings, check the setscrews to ensure that the shaft is held securely. Make sure that all bearing braces are tight.
- Inspect both the main unit control panel and heat section control box for loose electrical components and terminal connections, as well as damaged wire insulation. Make any necessary repairs.
- Gas Heat Units only—Check the heat exchanger for any corrosion, cracks, or holes.
- Check the combustion air blower for dirt. Clean as necessary.

Note: Typically, it is not necessary to clean the gas furnace. However, if cleaning does become necessary, remove the burner inspection plate from the rear of the heat exchanger to access the drum. Be sure to replace the existing gaskets with new ones before reinstalling the inspection plate.

- Open the main gas valve and apply power to the unit heating section; then initiate a heat test using the start-up procedure described in "Gas Furnace Start-Up".
- Verify that the ignition system operates properly.

Coil Cleaning

NOTICE:

Coil Cleaners!

Coil cleaners can damage roofs, surrounding buildings, vehicles, etc. Cleaning substances should be checked to ensure that they will not cause damage to surroundings. Coils and roof (if applicable) should be rinsed thoroughly. Do not spray coil cleaners in windy conditions.

Regular coil maintenance, including annual cleaning enhances the unit's operating efficiency by minimizing the following:

- Compressor head pressure and amperage draw
- Water carryover
- Fan brake horsepower
- Static pressure losses

At least once each year—or more often if the unit is located in a "dirty" environment—clean the evaporator, microchannel condenser, and reheat coils using the instructions outlined below. Be sure to follow these instructions as closely as possible to avoid damaging the coils.

To clean refrigerant coils, use a soft brush and a sprayer.

Important: DO NOT use any detergents with microchannel condenser coils. Pressurized water or air ONLY.

For evaporator and reheat coil cleaners, contact the local Trane Parts Center for appropriate detergents.

1. Remove enough panels from the unit to gain safe access to coils.

⚠WARNING

No Step Surface!

Do not walk on the sheet metal base. Walking on the base could cause the supporting metal to collapse, resulting in the operator/technician to fall. Failure to follow this recommendation could result in death or serious injury.

Important: Before attempting to enter the unit, bridge between the main supports. Bridging may consist of multiple 2 by 12 boards or sheet metal grating.

2. Straighten any bent coil fins with a fin comb.
3. For accessible areas, remove loose dirt and debris from both sides of the coil. For dual row microchannel condenser coil applications, seek pressure coil wand extension through the local Trane Parts Center.
4. When cleaning evaporator and reheat coils, mix the detergent with water according to the manufacturer's instructions. If desired, heat the solution to 150° F maximum to improve its cleansing capability.

Important: DO NOT use any detergents with microchannel coils. Pressurized water or air ONLY.

5. Pour the cleaning solution into the sprayer. If a high-pressure sprayer is used:
   a. The minimum nozzle spray angle is 15 degrees.
   b. Do not allow sprayer pressure to exceed 600 psi.
   c. Spray the solution perpendicular (at 90 degrees) to the coil face.
   d. For evaporator and reheat coils, maintain a minimum clearance of 6" between the sprayer nozzle and the coil. For microchannel condenser coils, optimum clearance between the sprayer nozzle and the microchannel coil is 1" to 3".
6. Spray the leaving-airflow side of the coil first; then spray the opposite side of the coil. For evaporator and reheat coils, allow the cleaning solution to stand on the coil for five minutes.
7. Rinse both sides of the coil with cool, clean water.
8. Inspect both sides of the coil; if it still appears to be dirty, repeat Steps 6 and 7.
9. Reinstall all of the components and panels removed in Step 1; then restore power to the unit.
10. For evaporator and reheat coils, use a fin comb to straighten any coil fins which were inadvertently bent during the cleaning process.

Microchannel Condenser Coil Repair and Replacement

If microchannel condenser coil repair or replacement is required, seek HVAC Knowledge Center information or Service Guide document RT-SVB83*-EN for further details.

Steam or Hot Water Coils

To clean a steam or hot water coil, use a soft brush, a steam-cleaning machine, and water.

⚠WARNING

Hazardous Voltage!

Disconnect all electric power, including remote disconnects before servicing. Follow proper lockout/tagout procedures to ensure the power can not be inadvertently energized. Failure to disconnect power before servicing could result in death or serious injury.

1. Verify that switches 1S1 and 1S70 are turned OFF, and that the main unit disconnect is locked open.
2. Remove enough panels and components from the unit to gain sufficient access to the coil.
3. Straighten any bent coil fins with a fin comb. (Use the data in Table 74, p. 171 to determine the appropriate fin comb size.)

4. Remove loose dirt and debris from both sides of the coil with a soft brush.
5. Use the steam-cleaning machine to clean the leaving-air side of the coil first; start at the top of the coil and work downward; then clean the entering-air side of the coil, starting at the top of the coil and working downward.
6. Check both sides of the coil; if it still appears dirty, repeat Step 5.
7. Reinstall all of the components and panels removed in Step 2; then restore power to the unit.

Evaporative Condenser Coil

Sump Water Management

Water Supply. Overall performance of any water-cooled device can be affected by suspended particulates, mineral concentration, trash and debris resulting in clogging and heat transfer loss. The unit is designed to greatly minimize problems with these impurities, however, float valves and solenoid valves are used to control the incoming water.

If the incoming water contains contaminants, sand or other objects, it is best to insert an incoming line strainer having a mesh of 80 to 100. The inlet line should be flushed prior to connection to the unit, whether or not there is a strainer.

There is an air gap between the water inlet float valve and sump water level to prevent back flow; however, if local code dictates, a backflow prevention valve may be required (field-provided and installed by others).

Water Drain.

Local Site Discharge: Rooftop or simple storm sewer discharge is generally acceptable. Do not routinely direct the sump discharge onto an area that will be adversely affected. For example, continued sump discharge into a flower bed where the input water contains CaCO3 (lime) will eventually decrease the pH of the soil.

Sewer Discharge: The quantities of mineral and debris flushed are actually very small and do not cause problems when diluted in normal sewer flow. However, local, state or federal standards and restrictions must be followed in any given locality.

Traditional Bleed Method.

ASHRAE recommendation for continuous bleed rates:

With good, quality makeup water, the bleed rates (0.8 to 2 GPH/ton) may be as low as one-half the evaporation rate (1.6 to 2 GPH), and the total water consumption would range from 2.4 GPH/ton for air conditioning to 3 GPH/ton for refrigeration (Chapter 36.17 of ASHRAEs “Systems and Equipment Handbook”)

Operation and Care. The sump should be inspected at least every 6 months for possible build up of scale pieces that has been shed from the coils. The sump flush frequency or bleed rate should be increased if large amounts of scale are present.

If the water has a “milky or cloudy” appearance, then minerals are concentrating in the sump and the number of flushes should be increased.

If the water remains clear between flushes, then the number of flushes can be decreased. Through field trials, the optimum flush frequency can be determined. Please note that in some areas, water quality can vary during different times of the year. The sump water clarity should be checked periodically.

The evaporative condenser has several design features to reduce the possibility of biological growth in the sump. These features include:

- Air inlets constructed to eliminate direct sunlight in the sump
- The sump flush sequence replenishes the sump with fresh water 1 to 12 times per day depending on the flush setting
- The copper tubing in the coils is a natural biocide

Important: Do not use chlorine tablets directly on stainless steel surface as it can adversely affect its corrosion resistance.

Always consult local codes for water treatment and waste water removal requirements. Consult a water treatment expert for water analysis and chemical treatment methods and recommendations for specific applications.

If deemed necessary after consultation with local water experts, there are various means of water treatment available which can be field installed.

Table 83. Evaporative condenser models—maintenance and troubleshooting

Maintenance Schedule			
Component	**Action**	**Frequency**	**Comments**
Fan Motor	None Required		Non-grease bearings
Sump Pump	Inspect/Clean	1 – 2 times per year	Clean inlet openings to pump
Sump	Inspect/Clean	1 – 2 times per year depending on water hardness and unit run time	Sump can be drained and hosed out using hose bib provided at water fill solenoid valve. Vacuuming scale out is an alternate method.
Sump Float Switch	Inspect	1 – 2 times per year	Float should be free for full float travel
Sump Float Make Up Valve	Inspect for proper water level	1 – 2 times per year	
Spray Nozzles	Inspect/Clean	1 – 2 times per year	Inspection through access panel
Conductivity Sensor	Inspect/Clean	1 – 2 times per year	Clean sensor to ensure accurate readings
Conductivity Controller	Inspect/Recalibrate	1 – 2 times per year	Recalibrate controller
Troubleshooting			
Component	**Problem**	**Check**	**Fix**
Fan Motor	Does not run	Condenser Fan Relay closure and control voltage indicating a call from compressor control panel for the condenser fan to operate. Sump Pump Overload Trip. Fan Motor Overload Trip. Fan fuse trip.	Check each motor overload and reset if necessary. Check amp draw for each leg.
Sump Pump	Does not run	Sump Pump Overload Trip Low Water Level or faulty float switch. Unit in ‘Dry Mode’ Operation	Reset – check amps on each leg to determine if faulty motor. Check and clean debris around float switch. Check Ambient thermostat setting and mode of operation (close on rise). See section 2 for T’stat setup instructions.
Sump Pump	Low Flow	Pump may be operating backwards or impeller inlet may be slightly blocked.	Change pumping direction by changing any two legs to the pump motor. Disconnect Power and remove pump to inspect for possible impeller obstruction.
Spray Nozzle	Dry area on coil	Check for proper spray pattern over each quadrant.	Remove debris from clogged nozzle.

Fall Restraint

⚠WARNING

Falling Off Equipment!

This unit is built with fall restraint slots located on unit top that MUST be used during servicing. These slots are to be used with fall restraint equipment that will not allow an individual to reach the unit edge. However such equipment will NOT prevent falling to the ground, for they are NOT designed to withstand the force of a falling individual. Failure to use fall restraint slots and equipment could result in individual falling off the unit which could result in death or serious injury.

The fall restraint is located approximately 3 feet from the unit edge. Figure 142, p. 184

Figure 142. Fall restraint

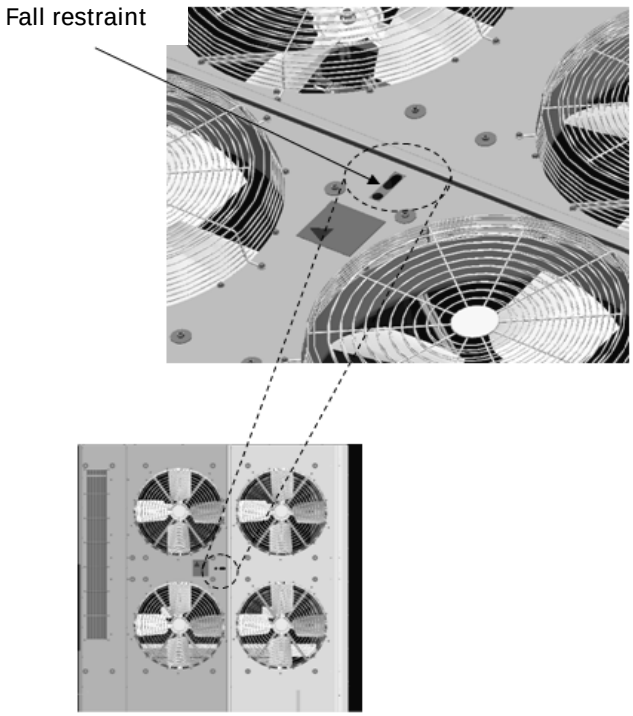

Final Process

For future reference, you may find it helpful to record the unit data in the blanks provided.

Complete Model Number:

Unit Serial Number:

Unit “DL” Number (“Design special” units only):

Wiring diagram numbers (from unit control panel):

-schematic(s)

-connections

Unit Address (TCI)

Network ID (LCI or BCI)

Table 84. Sample maintenance log

Date	Current Ambient Temp F/C	Refrigerant Circuit #1						Refrigerant Circuit #2					
		Compr. Oil Level	Suct. Press. Psig/kPa	Disch. Press Psig/kPa	Liquid Press Psig/kPa	Super-heat F/C	Sub-cool F/C	Compr. Oil Level	Suct. Press. Psig/kPa	Disch. Press Psig/kPa	Liquid Press Psig/kPa	Super-heat F/C	Sub-cool F/C
		- ok - low						- ok - low					
		- ok - low						- ok - low					
		- ok - low						- ok - low					
		- ok - low						- ok - low					
		- ok - low						- ok - low					
		- ok - low						- ok - low					
		- ok - low						- ok - low					
		- ok - low						- ok - low					
		- ok - low						- ok - low					
		- ok - low						- ok - low					
		- ok - low						- ok - low					
		- ok - low						- ok - low					
		- ok - low						- ok - low					
		- ok - low						- ok - low					

Unit Wiring Diagram Numbers

Note: Wiring diagrams can be accessed via e-Library by entering the diagram number in the literature order number search field or by calling technical support.

Table 85. Wiring diagram matrix

	Air Cooled	Water Cooled	Tonnage	Description
Power				
VAV & SZVAV	2313-1178		20, 30-75T	SCHEMATIC, POWER—W/ SUP VFD
	2313-1179		20, 30-75T	SCHEMATIC, POWER—W/ EXH/RET VFD
	2313-1180		20, 30-75T	SCHEMATIC, POWER—W/ SUP & EXH/RET VFD
	2313-1181		40-70	SCHEMATIC, POWER—W/ VAR SPD COMPR & SUP VFD
	2313-1182		40-70	SCHEMATIC, POWER—W/ VAR SPD COMPR & SUP & EXH/RET VFD
	2313-1803		20, 30-75T	SCHEMATIC, POWER— W/ SUP VFD, 65K SCCR
	2313-1804		20, 30-75T	SCHEMATIC, POWER—W/ EXH/RET VFD, 65K SCCR
	2313-1805		20, 30-75T	SCHEMATIC, POWER—W/ SUP & EXH/RET VFD, 65K SCCR
	2313-1806		40-70	SCHEMATIC, POWER—W/ VAR SPD COMPR & SUP VFD, 65K SCCR
	2313-1807		40-70	SCHEMATIC, POWER—W/ VAR SPD COMPR & SUP & EXH/RET VFD, 65K SCCR
	2313-1185		25T	SCHEMATIC, POWER—W/ SUP VFD
	2313-1186		25T	SCHEMATIC, POWER—W/ EXH/RET VFD
	2313-1187		25T	SCHEMATIC, POWER—W/ SUP & EXH/RET VFD
	2313-1810		25T	SCHEMATIC, POWER—W/ SUP VFD, 65K SCCR
	2313-1811		25T	SCHEMATIC, POWER—W/ EXH/RET VFD, 65K SCCR
	2313-1812		25T	SCHEMATIC, POWER—W/ SUP & EXH/RET VFD, 65K SCCR
	2313-1190		90-130T	SCHEMATIC, POWER—W/ SUP VFD
	2313-1191		90-130T	SCHEMATIC, POWER—W/ EXH VFD
	2313-1192		90-130T	SCHEMATIC, POWER—W/ SUP & EXH VFD
	2313-1815		90-130T	SCHEMATIC, POWER—W/ SUP VFD, 65K SCCR
	2313-1816		90-130T	SCHEMATIC, POWER—W/ EXH VFD, 65K SCCR
	2313-1817		90-130T	SCHEMATIC, POWER—W/ SUP & EXH VFD, 65K SCCR
		2313-1195	24, 36-89T	SCHEMATIC, POWER—EVAP COOLED W/ SUP VFD
		2313-1196	24, 36-89T	SCHEMATIC, POWER—EVAP COOLED W/ EXH/RET VFD
		2313-1197	24, 36-89T	SCHEMATIC, POWER—EVAP COOLED W/ SUP & EXH/RET VFD
		2313-1820	24, 36-89T	SCHEMATIC, POWER—EVAP COOLED W/ SUP VFD, 65K SCCR
		2313-1821	24, 36-89T	SCHEMATIC, POWER—EVAP COOLED W/ EXH/RET VFD, 65K SCCR
		2313-1822	24, 36-89T	SCHEMATIC, POWER—EVAP COOLED W/ SUP & EXH/RET VFD, 65K SCCR
		2313-1877	29T	SCHEMATIC, POWER—EVAP COOLED W/ SUP VFD
		2313-1878	29T	SCHEMATIC, POWER—EVAP COOLED W/ EXH/RET VFD
		2313-1879	29T	SCHEMATIC, POWER—EVAP COOLED W/ SUP & EXH/RET VFD
		2313-1825	29T	SCHEMATIC, POWER—EVAP COOLED W/ SUP VFD, 65K SCCR
		2313-1826	29T	SCHEMATIC, POWER—EVAP COOLED W/ EXH/RET VFD, 65K SCCR
		2313-1827	29T	SCHEMATIC, POWER—EVAP COOLED W/ SUP & EXH/RET VFD, 65K SCCR
CV	2313-1177		20, 30-75T	SCHEMATIC, POWER—STD
	2313-1802		20, 30-75T	SCHEMATIC, POWER—STD, 65K SCCR
	2313-1184		25T	SCHEMATIC, POWER—STD
	2313-1809		25T	SCHEMATIC, POWER—STD, 65K SCCR
	2313-1189		90-130T	SCHEMATIC, POWER—STD
	2313-1189		90-130T	SCHEMATIC, POWER—STD, 65K SCCR
		2313-1194	24, 36-89T	SCHEMATIC, POWER—EVAP COOLED STD
		2313-1819	24, 36-89T	SCHEMATIC, POWER—EVAP COOLED STD, 65K SCCR

Table 85. Wiring diagram matrix

	Air Cooled	Water Cooled	Tonnage	Description
		2313-1876	29T	SCHEMATIC, POWER—EVAP COOLED STD
		2313-1824	29T	SCHEMATIC, POWER—EVAP COOLED STD, 65K SCCR
RTM				
VAV & SZVAV	2313-1125		20-89T	SCHEMATIC, CONTROLS—W/ SUP VFD
	2313-1126		20-89T	SCHEMATIC, CONTROLS—W/ EXH/RET VFD
	2313-1127		20-89T	SCHEMATIC, CONTROLS—W/ SUP & EXH/RET VFD
	2313-1829		20-89T	SCHEMATIC, CONTROLS—W/ SUP VFD, 65K SCCR
	2313-1830		20-89T	SCHEMATIC, CONTROLS—W/ EXH/RET VFD, 65K SCCR
	2313-1831		20-89T	SCHEMATIC, CONTROLS—W/ SUP & EXH/RET VFD, 65K SCCR
	2313-1130		90-130T	SCHEMATIC, CONTROLS—W/ SUP VFD
	2313-1131		90-130T	SCHEMATIC, CONTROLS—W/ EXH VFD
	2313-1132		90-130T	SCHEMATIC, CONTROLS—W/ SUP & EXH VFD
	2313-1835		90-130T	SCHEMATIC, CONTROLS—W/ SUP VFD, 65K SCCR
	2313-1836		90-130T	SCHEMATIC, CONTROLS—W/ EXH VFD, 65K SCCR
	2313-1837		90-130T	SCHEMATIC, CONTROLS—W/ SUP & EXH VFD, 65K SCCR
CV	2313-1124		20-89T	SCHEMATIC, CONTROLS—STD
	2313-1829		20-89T	SCHEMATIC, CONTROLS—STD, 65K SCCR
	2313-1129		90-130T	SCHEMATIC, CONTROLS—STD
	2313-1834		90-130T	SCHEMATIC, CONTROLS—STD, 65K SCCR
Compressor Module (SCM/MCM) & MDM	2313-1017		20-30T	SCHEMATIC, CONTROLS—SCM & MDM
	2313-1858		20-30T	SCHEMATIC, CONTROLS—SCM & MDM, 65K SCCR
	2313-1018		40-75T	SCHEMATIC, CONTROLS—MCM & MDM
	2313-1862		40-75T	SCHEMATIC, CONTROLS—MCM & MDM, 65K SCCR
	2313-1172		40-70T	SCHEMATIC, CONTROLS—MCM & MDM W/VARI SPD COMPR
	1213-0116		40-70T	SCHEMATIC, CONTROLS—MCM & MDM W/VARI SPD COMPR, 65K SCCR
	2307-9188		90-130T	SCHEMATIC, CONTROLS—STD OR W/ SUP OR W/ EXH VFD
	2313-1873		90-130T	SCHEMATIC, CONTROLS—STD OR W/ SUP OR W/ EXH VFD, 65K SCCR
		2313-1016	24-89T	SCHEMATIC, CONTROLS—EVAP COOLED
		2313-1874	24-89T	SCHEMATIC, CONTROLS—EVAP COOLED, 65K SCCR
Heat & GBAS	2307-3891		20-130T	SCHEMATIC, CONTROLS—ELEC/2-STG GAS/HYDRONIC HT—STD
	2307-3892		20-130T	SCHEMATIC, CONTROLS—ELEC/2-STG GAS/HYDRONIC HT W/ SUP VFD
	2307-3955		20-130T	SCHEMATIC, CONTROLS—MOD GAS—STD
	2307-3956		20-130T	SCHEMATIC, CONTROLS—MOD GAS W/ SUP VFD
Control Options	2313-1949		20-130T	SCHEMATIC, CONTROLS—STD OR W/ SUP VFD
	2313-1950		20-130T	SCHEMATIC, CONTROLS—W/ EXH/RET VFD OR W/ SUP & EXH/RET VFD
VFD Schematics				
TR200	2309-3577		90-130T	SCHEMATIC/CONNECTION—SUP VFD #1 W/ BYPASS
	2309-3578		90-130T	SCHEMATIC/CONNECTION—EXH/RET VFD W/ BYPASS
	2309-3579		90-130T	SCHEMATIC/CONNECTION—SUP VFD #2 W/ BYPASS
	2309-3581		90-130T	SCHEMATIC/CONNECTION—SUP VFD #1 W/O BYPASS
	2309-3582		90-130T	SCHEMATIC/CONNECTION—EXH/RET VFD W/O BYPASS
	2309-3583		90-130T	SCHEMATIC/CONNECTION—SUP VFD #2 W/O BYPASS
TR150	2313-1944		20-89T	SCHEMATIC/CONNECTION—SUP VFD W/O BYPASS

Table 85. Wiring diagram matrix

	Air Cooled	Water Cooled	Tonnage	Description
	2313-1945		20-89T	SCHEMATIC/CONNECTION—SUP VFD W/ BYPASS
	2313-1946		20-89T	SCHEMATIC/CONNECTION—EXH/RET VFD W/O BYPASS
	2313-1947		20-89T	SCHEMATIC/CONNECTION—EXH/RET VFD W/ BYPASS
TRV200	2313-1175		40-70T	SCHEMATIC/CONNECTION—VAR SPD COMPR VFD
Heat				
Electric	2306-8932		20-89T	SCHEMATIC, ELECTRIC HEAT—460/575V 2 CKT
	2306-8933		20-89T	SCHEMATIC, ELECTRIC HEAT—ALL VOLTAGES 3 CKT
	2306-8934*		30-89T	SCHEMATIC, ELECTRIC HEAT—ALL VOLTAGES 6 CKT
	2306-8934*		90-130T	SCHEMATIC, ELECTRIC HEAT—460/575V 6 CKT 190KW
	2306-8935		30-89T	SCHEMATIC, ELECTRIC HEAT—200V 7 CKT
	2307-2171		20-89T	CONNECTION, ELECTRIC HEAT—460/575V 2 CKT-3 OR 1 STEP SEE NOTE 6
	2307-2172		20-89T	CONNECTION, ELECTRIC HEAT—ALL VOLTAGES 3 CKT-3 OR 1 STEP
	2307-2173		20-89T	CONNECTION, ELECTRIC HEAT—ALL VOLTAGES 6 CKT-3 OR 1 STEP
	2307-2174		30-89T	CONNECTION, ELECTRIC HEAT—200V 7 CKT-3 OR 1 STEP
	2307-2175		90-130T	CONNECTION, ELECTRIC HEAT—460/575V 6 CKT—190KW SEE NOTE 7
Gas	2313-1011		20-130T	SCHEMATIC/CONNECTION—2-STAGE NAT GAS HEAT 235-1000 MBh
	2307-9103		20-130T	SCHEMATIC/CONNECTION—MODULATING NAT GAS HEAT 500, 850 & 1000 MBh
Control Box Connections				
VAV/SZVAV	2313-1882		20-30T	CONNECTION, CONTROL BOX—W/ SUP VFD
	2313-1883		20-30T	CONNECTION, CONTROL BOX—W/ EXH/RET VFD
	2313-1884		20-30T	CONNECTION, CONTROL BOX— W/ SUP & EXH/RET VFD
	2313-1840		20-30T	CONNECTION, CONTROL BOX—W/ SUP VFD, 65K SCCR
	2313-1841		20-30T	CONNECTION, CONTROL BOX—W/ EXH/RET VFD, 65K SCCR
	2313-1842		20-30T	CONNECTION, CONTROL BOX—W/ SUP & EXH/RET VFD, 65K SCCR
	2313-1887		40-75T	CONNECTION, CONTROL BOX—W/ SUP VFD
	2313-1888		40-75T	CONNECTION, CONTROL BOX—W/ EXH/RET VFD
	2313-1889		40-75T	CONNECTION, CONTROL BOX—W/ SUP & EXH/RET VFD
	2313-0068		40-75T	CONNECTION, CONTROL BOX—W/ SUP VFD, 65K SCCR
	2313-0069		40-75T	CONNECTION, CONTROL BOX—W/ EXH/RET VFD, 65K SCCR
	2313-0070		40-75T	CONNECTION, CONTROL BOX—W/ SUP & EXH/RET VFD, 65K SCCR
	2313-1890		40-70T	CONNECTION, CONTROL BOX—VARI SPD COMPR W/ SUP VFD
	2313-1891		40-70T	CONNECTION, CONTROL BOX—VARI SPD COMPR W/ SUP & EXH/RET VFD
	2313-0071		40-70T	CONNECTION, CONTROL BOX—VARI SPD COMPR W/ SUP VFD, 65K SCCR
	2313-0072		40-70T	CONNECTION, CONTROL BOX—VARI SPD COMPR W/ SUP & EXH/RET VFD, 65K SCCR
	2313-1894		90-130T	CONNECTION, CONTROL BOX—W/ SUP VFD
	2313-1895		90-130T	CONNECTION, CONTROL BOX—W/ EXH VFD
	2313-1896		90-130T	CONNECTION, CONTROL BOX—W/ SUP & EXH VFD
	2313-1850		90-130T	CONNECTION, CONTROL BOX—W/ SUP VFD, 65K SCCR
	2313-1851		90-130T	CONNECTION, CONTROL BOX—W/ EXH VFD, 65K SCCR
	2313-1852		90-130T	CONNECTION, CONTROL BOX—W/ SUP & EXH VFD, 65K SCCR
		2313-1899	24-89T	CONNECTION, CONTROL BOX—EVAP COOLED W/ SUP VFD

Table 85. Wiring diagram matrix

	Air Cooled	Water Cooled	Tonnage	Description
		2313-1900	24-89T	CONNECTION, CONTROL BOX—EVAP COOLED W/ EXH/RET VFD
		2313-1901	24-89T	CONNECTION, CONTROL BOX—EVAP COOLED W/ SUP & EXH/RET VFD
Module Connections	2313-1904		20-30T	CONNECTION, MODULES—W/ SUP VFD
	2313-1905		20-30T	CONNECTION, MODULES—W/ EXH/RET VFD
	2313-1906		20-30T	CONNECTION, MODULES—W/ SUP & EXH/RET VFD
	2313-1908		40-75T	CONNECTION, MODULES—W/ SUP VFD
	2313-1909		40-75T	CONNECTION, MODULES—W/ EXH/RET VFD
	2313-1910		40-75T	CONNECTION, MODULES—W/ SUP & EXH/RET VFD
	2313-1911		40-70T	CONNECTION, MODULES—VARI SPD COMPR W/ SUP VFD
	2313-1912		40-70T	CONNECTION, MODULES—VARI SPD COMPR W/ SUP & EXH/RET VFD
	2313-1915		90-130T	CONNECTION, MODULES—W/ SUP VFD
	2313-1916		90-130T	CONNECTION, MODULES—W/ EXH VFD
	2313-1917		90-130T	CONNECTION, MODULES—W/ SUP & EXH VFD
		2313-1920	24-89T	CONNECTION, MODULES—EVAP COOLED W/ SUP VFD
		2313-1921	24-89T	CONNECTION, MODULES—EVAP COOLED W/ EXH/RET VFD
		2313-1922	24-89T	CONNECTION, MODULES—EVAP COOLED W/ SUP & EXH/RET VFD
Raceway Connections	2313-1925		20-30T	CONNECTION, RACEWAY—W/ SUP VFD
	2313-1926		20-30T	CONNECTION, RACEWAY—W/ EXH/RET VFD
	2313-1927		20-30T	CONNECTION, RACEWAY—W/ SUP & EXH/RET VFD
	2313-1929		40-75T	CONNECTION, RACEWAY—W/ SUP VFD
	2313-1930		40-75T	CONNECTION, RACEWAY—W/ EXH/RET VFD
	2313-1931		40-75T	CONNECTION, RACEWAY—W/ SUP & EXH/RET VFD
	2313-1932		40-70T	CONNECTION, RACEWAY—VARI SPD COMPR W/ SUP VFD
	2313-1933		40-70T	CONNECTION, RACEWAY—VARI SPD COMPR W/ SUP & EXH/RET VFD
	2313-1869		40-75T	CONNECTION, RACEWAY—W/ SUP VFD, 65K SCCR
	2313-1870		40-75T	CONNECTION, RACEWAY—W/ EXH/RET VFD, 65K SCCR
	2313-1871		40-75T	CONNECTION, RACEWAY—W/ SUP & EXH/RET VFD, 65K SCCR
	2313-1936		90-130T	CONNECTION, RACEWAY—W/ SUP VFD
	2313-1937		90-130T	CONNECTION, RACEWAY—W/ EXH VFD
	2313-1938		90-130T	CONNECTION, RACEWAY—W/ SUP & EXH VFD
		2313-1941	24-89T	CONNECTION, RACEWAY—EVAP COOLED W/ SUP VFD
		2313-1942	24-89T	CONNECTION, RACEWAY—EVAP COOLED W/ EXH/RET VFD
		2313-1943	24-89T	CONNECTION, RACEWAY—EVAP COOLED W/ SUP & EXH/RET VFD
Field Connection	2313-1119		20-130T	FIELD CONNECTION—VAV
		2313-1122	24-89T	FIELD CONNECTION—EVAP COOLED VAV
CV	2313-1881		20-30T	CONNECTION, CONTROL BOX—STD
	2313-1839		20-30T	CONNECTION, CONTROL BOX—STD, 65K SCCR
	2313-1886		40-75T	CONNECTION, CONTROL BOX—STD
	2313-0067		40-75T	CONNECTION, CONTROL BOX—STD, 65K SCCR
	2313-1893		90-130T	CONNECTION, CONTROL BOX—STD
	2313-1849		90-130T	CONNECTION, CONTROL BOX—STD, 65K SCCR
		2313-1898	24-89T	CONNECTION, CONTROL BOX—EVAP COOLED STD
Module Connections	2313-1903		20-30T	CONNECTION, MODULES—STD
	2313-1907		40-75T	CONNECTION, MODULES—STD
	2313-1914		90-130T	CONNECTION, MODULES—STD

Table 85. Wiring diagram matrix

	Air Cooled	Water Cooled	Tonnage	Description
		2313-1919	24-89T	CONNECTION , MODULES—EVAP COOLED STD
Raceway Connections	2313-1924		20-30T	CONNECTION, RACEWAY—STD
	2313-1928		40-75T	CONNECTION, RACEWAY—STD
	2313-1868		40-75T	CONNECTION, RACEWAY—STD, 65K SCCR
	2313-1935		90-130T	CONNECTION, RACEWAY—STD
		2313-1940	24-89T	CONNECTION, RACEWAY—EVAP COOLED STD
Field Connection	2313-1118		20-130T	FIELD CONNECTION—CV & SZVAV
		2313-1121	24-89T	FIELD CONNECTION—EVAP COOLED CV & SZVAV

Warranty

Commercial Equipment Rated 20 Tons and Larger and Related Accessories

Products Covered—This warranty* is extended by Trane Inc. and applies only to commercial equipment rated 20 tons and larger and related accessories.

The Company warrants for a period of 12 months from initial start-up or 18 months from date of shipment, whichever is less, that the Company products covered by this order (1) are free from defects in material and workmanship and (2) have the capacities and ratings set forth in the Company's catalogs and bulletins, provided that no warranty is made against corrosion, erosion or deterioration. The Company's obligations and liabilities under this warranty are limited to furnishing f.o.b. factory or warehouse at Company designated shipping point, freight allowed to Buyer's city (or port of export for shipment outside the conterminous United States) replacement equipment (or at the option of the Company parts therefore) for all Company products not conforming to this warranty and which have been returned to the manufacturer. The Company shall not be obligated to pay for the cost of lost refrigerant. No liability whatever shall attach to the Company until said products have been paid for and then said liability shall be limited to the purchase price of the equipment shown to be defective.

The Company makes certain further warranty protection available on an optional extra-cost basis. Any further warranty must be in writing, signed by an officer of the Company.

The warranty and liability set forth herein are in lieu of all other warranties and liabilities, whether in contract or in negligence, express or implied, in law or in fact, including implied warranties of merchantability and fitness for particular use. In no event shall the Company be liable for any incidental or consequential damages.

THE WARRANTY AND LIABILITY SET FORTH HEREIN ARE IN LIEU OF ALL OTHER WARRANTIES AND LIABILITIES, WHETHER IN CONTRACT OR IN NEGLIGENCE, EXPRESS OR IMPLIED, IN LAW OR IN FACT, INCLUDING IMPLIED WARRANTIES OF MERCHANTABILITY AND FITNESS FOR PARTICULAR USE, IN NO EVENT SHALL WARRANTOR BE LIABLE FOR ANY INCIDENTAL OR CONSEQUENTIAL DAMAGES.

Manager—Product Service

Trane Inc., Clarksville, Tn 37040-1008

PW-215-2688

* A 10-year limited warranty is provided on optional Full Modulation Gas Heat Exchanger.
* A 5-year limited warranty is provided for optional "Ultra Low Leak" airfoil blade economizer assemblies and the "Ultra Low Leak" economizer actuator.
* Optional Extended Warranties are available for compressors and heat exchangers of Combination Gas-Electric Air Conditioning Units.

Factory Warranty Information

Compliance with the following is required to preserve the factory warranty:

All Unit Installations

Startup MUST be performed by Trane, or an authorized agent of Trane, to VALIDATE this WARRANTY. Contractor must provide a two-week startup notification to Trane (or an agent of Trane specifically authorized to perform startup).

On all IntelliPak™ I units, a Trane factory REQUIRED startup (mandatory with Evaporative Condensing or optionally selected ON OTHER UNITS) provides "maximized unit reliability and overall unit performance," in addition to preserving the standard factory warranty.

Additional Requirements for Units Requiring Disassembly

When a new fully assembled IntelliPak is shipped and received from our Trane manufacturing location, and, for any reason, it requires disassembly or partial disassembly—which could include but is not limited to the evaporator, condenser, control panel, compressor/motor, factory mounted starter, or any other components originally attached to the fully assembled unit—compliance with the following is required to preserve the factory warranty:

- Trane, or an agent of Trane specifically authorized to perform start-up and warranty of Trane® products, will perform or have direct on-site technical supervision of the disassembly and reassembly work.
- The installing contractor must notify Trane—or an agent of Trane specifically authorized to perform start-up and warranty of Trane® products—two weeks in advance of the scheduled disassembly work to coordinate the disassembly and reassembly work.
- Start-up must be performed by Trane or an agent of Trane specifically authorized to perform start-up and warranty of Trane® products.

Trane, or an agent of Trane specifically authorized to perform startup and warranty of Trane® products, will provide qualified personnel and standard hand tools to perform the disassembly work at a location specified by the contractor.The contractor shall provide the rigging equipment such as chain falls, gantries, cranes, forklifts, etc. necessary for the disassembly and reassembly work and the required qualified personnel to operate the necessary rigging equipment.

Trane optimizes the performance of homes and buildings around the world. A business of Ingersoll Rand, the leader in creating and sustaining safe, comfortable and energy efficient environments, Trane offers a broad portfolio of advanced controls and HVAC systems, comprehensive building services, and parts.
For more information, visit www.Trane.com.

Trane has a policy of continuous product and product data improvement and reserves the right to change design and specifications without notice.

© 2015 Trane All rights reserved
RT-SVX36M-EN 01 Feb 2015
Supersedes RT-SVX36L-EN (01 Aug 2014)

We are committed to using environmentally conscious print practices that reduce waste.