Installation, Operation, and Maintenance

Packaged Rooftop Air Conditioners
Precedent™ — Gas/Electric
3 to 10 Tons – 60 Hz

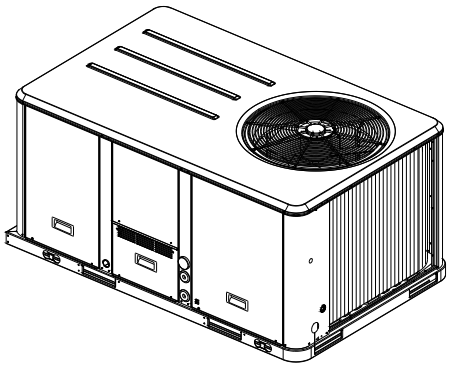

Model Numbers

YSC037E - YSC067E
YSC036E - YSC060E
YSC072F - YSC120F
YHC048F - YHC060F
YHC037E - YHC067E
YHC036E - YHC072E
YHC120E
YHC072F - YHC102F

⚠ SAFETY WARNING

Only qualified personnel should install and service the equipment. The installation, starting up, and servicing of heating, ventilating, and air-conditioning equipment can be hazardous and requires specific knowledge and training. Improperly installed, adjusted or altered equipment by an unqualified person could result in death or serious injury. When working on the equipment, observe all precautions in the literature and on the tags, stickers, and labels that are attached to the equipment.

December 2014

RT-SVX21Q-EN

Ingersoll Rand

Introduction

Read this manual thoroughly before operating or servicing this unit.

Warnings, Cautions, and Notices

Safety advisories appear throughout this manual as required. Your personal safety and the proper operation of this machine depend upon the strict observance of these precautions.

The three types of advisories are defined as follows:

⚠WARNING Indicates a potentially hazardous situation which, if not avoided, could result in death or serious injury.

⚠CAUTION Indicates a potentially hazardous situation which, if not avoided, could result in minor or moderate injury. It could also be used to alert against unsafe practices.

NOTICE Indicates a situation that could result in equipment or property-damage only accidents.

Important Environmental Concerns

Scientific research has shown that certain man-made chemicals can affect the earth's naturally occurring stratospheric ozone layer when released to the atmosphere. In particular, several of the identified chemicals that may affect the ozone layer are refrigerants that contain Chlorine, Fluorine and Carbon (CFCs) and those containing Hydrogen, Chlorine, Fluorine and Carbon (HCFCs). Not all refrigerants containing these compounds have the same potential impact to the environment. Trane advocates the responsible handling of all refrigerants-including industry replacements for CFCs such as HCFCs and HFCs.

Important Responsible Refrigerant Practices

Trane believes that responsible refrigerant practices are important to the environment, our customers, and the air conditioning industry. All technicians who handle refrigerants must be certified. The Federal Clean Air Act (Section 608) sets forth the requirements for handling, reclaiming, recovering and recycling of certain refrigerants and the equipment that is used in these service procedures. In addition, some states or municipalities may have additional requirements that must also be adhered to for responsible management of refrigerants. Know the applicable laws and follow them.

⚠WARNING

Proper Field Wiring and Grounding Required!

Failure to follow code could result in death or serious injury. All field wiring MUST be performed by qualified personnel. Improperly installed and grounded field wiring poses FIRE and ELECTROCUTION hazards. To avoid these hazards, you MUST follow requirements for field wiring installation and grounding as described in NEC and your local/state electrical codes.

⚠WARNING

Personal Protective Equipment (PPE) Required!

Installing/servicing this unit could result in exposure to electrical, mechanical and chemical hazards.

- **Before installing/servicing this unit, technicians MUST put on all PPE required for the work being undertaken (Examples; cut resistant gloves/sleeves, butyl gloves, safety glasses, hard hat/bump cap, fall protection, electrical PPE and arc flash clothing). ALWAYS refer to appropriate Material Safety Data Sheets (MSDS)/Safety Data Sheets (SDS) and OSHA guidelines for proper PPE.**
- **When working with or around hazardous chemicals, ALWAYS refer to the appropriate MSDS/SDS and OSHA/GHS (Global Harmonized System of Classification and Labelling of Chemicals) guidelines for information on allowable personal exposure levels, proper respiratory protection and handling instructions.**
- **If there is a risk of energized electrical contact, arc, or flash, technicians MUST put on all PPE in accordance with OSHA, NFPA 70E, or other country-specific requirements for arc flash protection, PRIOR to servicing the unit. NEVER PERFORM ANY SWITCHING, DISCONNECTING, OR VOLTAGE TESTING WITHOUT PROPER ELECTRICAL PPE AND ARC FLASH CLOTHING. ENSURE ELECTRICAL METERS AND EQUIPMENT ARE PROPERLY RATED FOR INTENDED VOLTAGE.**

Failure to follow instructions could result in death or serious injury.

© 2014 Trane All rights reserved

Copyright

This document and the information in it are the property of Trane, and may not be used or reproduced in whole or in part without written permission. Trane reserves the right to revise this publication at any time, and to make changes to its content without obligation to notify any person of such revision or change.

Trademarks

All trademarks referenced in this document are the trademarks of their respective owners.

Revision History

RT-SVX21Q-EN (17 Dec 2014)

- Updated IOM for the 81% AFUE single phase units

Table of Contents

Introduction 2
Warnings, Cautions, and Notices 2
Important Environmental Concerns 2
Important Responsible Refrigerant Practices 2
Copyright 3
Model Number Description 6
Model Number Notes 7
Model Number Description - 17 Plus 8
Model Number Notes 9
General Information 10
Unit Inspection 10
Storage 10
Unit Nameplate 10
Compressor Nameplate 10
Microchannel Condenser Barcode ID . . . 10
Unit Description 10
Economizer Control Actuator (Optional) 10
System Input Devices & Functions 11
Low Pressure Control 12
High Pressure Control 12
Power Exhaust Control (Optional) 12
Lead/Lag Control (Dual Circuit Only) . . . 12
Evaporator Frost Control 13
Discharge Line Temp Switch (DLTS) . . . 14
Smoke Detector Sensor (Optional) 14
Phase Monitor 14
Single Zone Variable Air Volume / Displacement Ventilation (Optional) 14
Human Interface - 5 Inch Color Touchscreen (Optional) 14
Unit Dimensions 15
Installation 22
Pre-Installation 22
Procedure 22
Foundation 24
Horizontal Units 24
Ductwork 25
Roof Curb 26
Downflow 26
Rigging 27
General Unit Requirements 27
Factory Installed Economizer 28
Temperature Limit Switch Usage for Gas Heat Units 28
Horizontal Discharge Conversion (3 to 5 Ton Units) 29
TCO-1 Instructions 29
Horizontal Discharge Conversion (6 to 10 Ton Units) 30
TCO1 Instructions 31
Return Air Smoke Detector 31
Main Electrical Power Requirements 32
Through-the-Base Gas Installation 32
Requirements for Gas Heat 33
Condensate Drain Configuration 33
Filter Installation 34
Field Installed Power Wiring 34
Main Unit Power 35
Standard Wiring 35
Optional TBUE Wiring (Through-the-Base Electrical Option) 35
Field-Installed Control Wiring 36
Control Power Transformer 36
Controls Using 24 VAC 36
Controls using DC Analog Input/Outputs (Standard Low Voltage Multi conductor Wire) 36
DC Conductors 37
Space Temperature Averaging (ReliaTel™ Only) 41
Pre-Start 44
Voltage Imbalance 44
Electrical Phasing (Three Phase Motors) . .44
Compressor Crankcase Heaters (Optional) 45
ReliaTel™ Controls 45

Test Modes 46
ReliaTel™ Controls 46
Electromechanical Controls Test Procedure 47
Unit Start-Up 48
Verifying Proper Air Flow 48
Units with 5-Tap Direct Drive Indoor Fan 48
Units with Belt Drive Indoor Fan 48
Units with Direct Drive Indoor Fan - Electromechanical Control 49
ReliaTel™ Units with Direct Drive Indoor Fan (7½ - 8½ Ton High Efficiency, 10 Ton Standard Efficiency) 49
Units with Constant CFM Direct Drive Indoor Fan 50
17 Plus units with the constant CFM direct drive indoor fan 50
Variable Air Volume Applications (Traditional VAV) 51
Supply Duct Static Pressure Control 52
Traditional VAV Standalone Operation . 52
Supply Air Temperature Reset 52
Return Air Smoke Detector 53
Economizer Start-Up 53
Compressor Start-Up 54
Dehumidification Option 54
Gas Heat Units 54
Final System Setup 55
Maintenance 56
Fan Belt Adjustment - Belt Drive Units . . . 56
Monthly Maintenance 57
Filters 57
Return Air Smoke Detector Maintenance 57
Condensate Overflow Switch 57
Cooling Season 57
Heating Season 57
Coil Cleaning 58
Annual Maintenance 59
Troubleshooting 60
ReliaTel™ Control 60
System Status Checkout Procedure 60
Method 1 60
Resetting Cooling and Ignition Lockouts .62
Zone Temperature Sensor (ZTS) Service Indicator 62
Clogged Filter Switch 62
Fan Failure Switch 62
Condensate Overflow Switch 62
Zone Temperature Sensor (ZTS) Tests . . .62
Test 1 - Zone Temperature Thermistor (ZTEMP) 62
Test 2 - Cooling Set Point (CSP) and Heating Set Point (HSP) 62
Test 3 - System Mode and Fan Selection .62
Test 4 - LED Indicator Test, (SYS ON, HEAT, COOL & SERVICE) 63
Relative Humidity Sensor Test 63
Programmable & Digital Zone Sensor Test 63
ReliaTel™ Refrigeration Module (RTRM) Default Chart 63
Unit Operation without a Zone Sensor . .63
Unit Economizer Control (ECA) Troubleshooting 64
ReliaTel™ Control 64
Electromechanical Control 64
Unit Economizer Control (ECA) Test Procedures 66
Electromechanical Control 66
Troubleshooting procedures for Direct Drive Plenum Fan 66
Unit Wiring Diagrams Numbers 67
Limited Warranty 69
Combination Gas Electric Air Conditioner .69
YCC, YCD, YCH, YCP, YSC and YHC (Parts Only) 69
Models Less Than 20 Tons for Residential Use* 69
Combination Gas Electric Air Conditioner .69
YCZ, YCY, YCX, YCC, YCD, YCH, YCP, YHC and YSC (Parts Only) 69
Models Less Than 20 Tons for Commercial Use* 69

Model Number Description

Y	S	C	0	3	6	E	3	R	Z	A	*	*
1	2	3	4	5	6	7	8	9	10	11	12	13

Digit 1 - Unit Type

Y DX Cooling, Gas Heat

Digit 2 - Efficiency

S Standard Efficiency
H High Efficiency

Digit 3 - Airflow

C Convertible

Digit 4,5,6 - Nominal Gross Cooling Capacity (MBh)

036 3 Ton
048 4 Ton
060 5 Ton
072 6 Ton
090 7½ Ton, Single Compressor
092 7½ Ton, Dual Compressor
102 8½ Ton
120 10 Ton

Digit 7 - Major Design Sequence

E R-410A Refrigerant
F Microchannel Type Condenser Coils[24]

Digit 8 - Voltage Selection

1 208/230/60/1
3 208-230/60/3
4 460/60/3
W 575/60/3

Digit 9 - Unit Controls

E Electromechanical
R ReliaTel™ Microprocessor

Digit 10 - Heating Capacity

L Low Heat
M Medium Heat
H High Heat
X Low Heat, Stainless Steel Heat Exchanger
Y Medium Heat, Stainless Steel Heat Exchanger
Z High Heat, Stainless Steel Heat Exchanger

Digit 11 - Minor Design Sequence

A First Sequence[21]
B Second Sequence[20]

Digit 12,13 - Service Sequence

** Factory Assigned

Digit 14 - Fresh Air Selection

0 No Fresh Air
A Manual Outside Air Damper 0-50%[4]
B Motorized Outside Air Damper 0-50%[28]
C Economizer, Dry Bulb 0-100% without Barometric Relief[7]
D Economizer, Dry Bulb 0-100% with Barometric Relief[7]
E Economizer, Reference Enthalpy 0-100% without Barometric Relief[3,7]
F Economizer, Reference Enthalpy 0-100% with Barometric Relief[3,7]
G Economizer, Comparative Enthalpy 0-100% without Barometric Relief[3,7]
H Economizer, Comparative Enthalpy 0-100% with Barometric Relief[3,7]
K Low Leak Economizer with Barometric Relief
M Low Leak Economizer with Reference Enthalpy with Barometric Relief
P Low Leak Economizer with Comparative Enthalpy with Barometric Relief

Digit 15 - Supply Fan/Drive Type/ Motor

0 Standard Drive[6]
1 Oversized Motor
2 Optional Belt Drive Motor[18]
6 Single Zone VAV[26]
7 Multi-Speed Indoor Fan[27]
E VAV Supply Air Temperature Control Standard Motor[33]

Digit 16 - Hinged Service Access/Filters

0 Standard Panels/Standard Filters
A Hinged Access Panels/Standard Filters
B Standard Panels/2″ MERV 8 Filters
C Hinged Access Panels/2″ MERV 8 Filters
D Standard Panels/2″ MERV 13 Filters
E Hinged Access Panels/2″ MERV 13 Filters

Digit 17 - Condenser Coil Protection

0 Standard Coil
1 Standard Coil with Hail Guard
2 Black Epoxy Pre-Coated Condenser Coil[25]
3 Black Epoxy Pre-Coated Condenser Coil with Hail Guard[25]
4 CompleteCoat™ Condenser Coil
5 CompleteCoat™ Condenser Coil with Hail Guard

Digit 18 - Through-the-Base Provisions

0 No Through-the-Base Provisions
A Through-the-Base Electric[8]
B Through-the-Base Gas Piping[16]
C Through-the-Base Electric and Gas Piping[16]

Digit 19 - Disconnect/Circuit Breaker (three-phase only)

0 No Disconnect/No Circuit Breaker
1 Unit Mounted Non-Fused Disconnect[8]
2 Unit Mounted Circuit Breaker[8]

Digit 20 - Convenience Outlet

0 No Convenience Outlet
A Unpowered Convenience Outlet
B Powered Convenience Outlet (three-phase only)[9]

Digit 21 - Communications Options[3]

0 No Communications Interface
1 Trane Communications Interface
2 LonTalk® Communications Interface
3 Novar 2024 Controls[30]
4 Novar 3051 Controls without Zone Sensor[30]
5 Novar 3051Controls Interface with DCV[30]
6 BACnet® Communications Interface

Digit 22 - Refrigeration System Option

0 Standard Refrigeration System[10]
B Dehumidification Option[22,23]

Digit 23 - Refrigeration Controls

Note: *Applicable to Digit 7 = E, F*

0 No Refrigeration Control[5]
1 Frostat™ [11,29]
2 Crankcase Heater[2]
3 Frostat™ [11,29] and Crankcase Heater[2]

Digit 24 - Smoke Detector[17]

0 No Smoke Detector
A Return Air Smoke Detector[12,13]
B Supply Air Smoke Detector
C Supply and Return Air Smoke Detectors[12,13]
D Plenum Smoke Detector

Digit 25 - System Monitoring Controls

0 No Monitoring Control[14]
1 Clogged Filter Switch[14]
2 Fan Failure Switch[14]
3 Discharge Air Sensing Tube[14]
4 Clogged Filter Switch and Fan Failure Switch[14]
5 Clogged Filter Switch and Discharge Air Sensing Tube[14]
6 Fan Failure Switch and Discharge Air Sensing Tube[14]
7 Clogged Filter Switch, Fan Failure Switch and Discharge Air Sensing Tube[14]
8 Novar Return Air Sensor (NOVAR 2024)[15,30]
9 Novar Zone Temp Sensor (NOVAR 3051)[19,30]
A Condensate Drain Pan Overflow Switch
B Clogged Filter Switch[14] and Condensate Drain Pan Overflow Switch
C Fan Failure Switch[14] and Condensate Drain Pan Overflow Switch
D Discharge Air Sensing[14] and Condensate Drain Pan Overflow Switch
E Clogged Filter Switch[14], Fan Failure Switch[14] and Condensate Drain Pan Overflow Switch
F Clogged Filter Switch[14], Discharge Air Sensing Tube[14] and Condensate Drain Pan Overflow Switch
G Fan Failure Switch, Discharge Air

Sensing Tube[14] and Condensate Drain Pan Overflow Switch
H Clogged Filter Switch[14], Fan Failure Switch[14], Discharge Air Sensing[14] and Condensate Drain Pan Overflow Switch

Digit 26 - System Monitoring Controls

0 No Monitoring Controls
A Demand Control Ventilation (CO_2)[31,32]
B Low Leak Economizer with FDD (Fault Detection & Diagnostics)
C FDD (Fault Detection & Diagnostics) with DCV (Demand Control Ventilation)

Digit 27 - Unit Hardware Enhancements

0 No Enhancements
1 Stainless Steel Drain Pan

Digit 31 - Advanced Unit Controls

0 Standard Unit Controls
1 Human Interface

Model Number Notes

1. Available on 3-5 ton models.
2. Crankcase heaters are optional on (Y)SC (036, 048, 060, 072, 090, 102, 120); standard on (Y)HC (036, 048, 060, 072, 092, 102, 120).
3. Not available with electromechanical controls.
4. Manual outside air damper will ship factory supplied within the unit, but must be field installed.
5. High pressure control is standard on all units.
6. On 3-5 ton, multispeed direct drive is standard on single phase and 15 SEER. On 6-10 ton, multispeed direct drive is standard on all 10 ton and 7.5-8.5 ton high efficiency. Belt drive is standard on all other units.

Digit 15 = 0
Standard Efficiency
3 Phase (3-8½ Ton) = Belt Drive
3 Phase (10 Ton) = Ultra High Efficiency Direct Drive Plenum Fan
High Efficiency
1 Phase = High Efficiency Multispeed Direct Drive Motor
3 Phase (3-5 ton) = High Efficiency Multispeed Direct Drive Motor
3 Phase (3-5 ton w/Dehumidification) = Belt Drive Motor
3 Phase (7½-10 ton) = Ultra High Efficiency Direct Drive Plenum Fan

7. Economizer with Barometric Relief is for downflow configured units only. Order Economizer without Barometric Relief for horizontal configuration. Barometric Relief for horizontal configured units must be ordered as field-installed accessory.
8. Through-the-base electric required when ordering disconnect/circuit breaker options.
9. Requires use of Disconnect or Circuit Breaker.

Not Available
Standard Efficiency
10 Ton w/575V
High Efficiency 575V (any unit)
3-5 Ton w/ Standard Indoor Motor (except dehumidification) and w/460V

10. Standard metering devices are TXVs.
11. Frostat cannot be field installed in electro-mechanical units.
12. The return air smoke detector may not fit up or work properly on the Precedent units when used in conjunction with 3rd party accessories such as bolt on heat wheels, economizers and power exhaust. Do not order the return air smoke detectors when using this type of accessory.
13. Return Air Smoke Detector cannot be ordered with Novar Controls.
14. These options are standard when ordering Novar Controls.
15. This option is used when ordering Novar Controls.
16. Includes gas piping and shutoff (field assembly required).
17. Not available with high temperature duct sensor accessory.
18. Digit 15 = 2

Standard Efficiency
3 Phase = Not Available
High Efficiency
1 Phase = Not Available
3 Phase (3-5 ton) = **May be Ordered**
3 Phase (3-5 ton w/Dehumidification) = Not Available
3 Phase (6-10 ton) = Not Available

19. Novar Sensor utilized with Digit 21 = (4) Novar 3051 Controls without Zone Sensor.
20. Available for 10 ton standard efficiency models only.
21. Available for 3, 4, 5, 6, 7½, 8½ ton standard/high efficiency models only.
22. Requires selection of 2" Pleated Filters (option B or C) for Digit 16.
23. Not available on all single phase or standard efficiency.
24. Standard on YSC 6, 7½ (single and dual systems), 8½, 10 ton standard efficiency models and YHC 4, 5, 6, 7½, 8½ ton high efficiency models (except for 4,5,6 ton dehumidification models).
25. Epoxy coil and epoxy with hailguard options are not available for units with microchannel condenser coil.
26. Single Zone VAV is only available on 7.5-10 ton high efficiency and 10 ton standard efficiency products with ReliaTel™ controls.
27. Multi-speed indoor fan available only on 7.5 & 8.5 ton high efficiency, and 10 ton products with ReliaTel™ controls.
28. Motorized Outside Air Damper is not available on Multi-Speed or SZVAV (Single Zone Variable Air Volume) products.
29. Frostat standard on Multi-Speed and SZVAV (Single Zone Variable Air Volume) products.
30. Novar is not available with SZVAV products.
31. Demand Control Ventilation not available with electromechanical controls.
32. Demand Control Ventilation Option includes wiring only. The $C0_2$ sensor is a field-installed only option.
33. Discharge Air Sensing is also standard equipment on units with Single Zone and Supply Air Temperature Control VAV.

Model Number Description - 17 Plus

Y	H	C	0	3	7	E	3	R	Z	B	*	*
1	2	3	4	5	6	7	8	9	10	11	12	13

Digit 1 - Unit Type

T DX Cooling
Y DX Cooling, Gas Heat

Digit 2 - Efficiency

S Standard Efficiency
H High Efficiency

Digit 3 - Airflow

C Convertible

Digit 4,5,6 - Nominal Gross Cooling Capacity (MBh)

037 3 Ton
047 4 Ton
067 5 Ton

Digit 7 - Major Design Sequence

E R-410A Refrigerant

Digit 8 - Voltage Selection

3 208-230/60/3
4 460/60/3

Digit 9 - Unit Controls

R ReliaTel™ Microprocessor

Digit 10 - Heating Capacity

0=No Electric Heat G=18 kW (1&3 phase)
B=6 kW (3 phase) J=23 kW (3 phase)
E=12 kW (3 phase)
L Low Heat
M Medium Heat
H High Heat
X Low Heat, Stainless Steel Heat Exchanger
Y Medium Heat, Stainless Steel Heat Exchanger
Z High Heat, Stainless Steel Heat Exchanger

Digit 11 - Minor Design Sequence

A First Sequence[16]

Digit 12,13 - Service Sequence

** Factory Assigned

Digit 14 - Fresh Air Selection

0 No Fresh Air
A Manual Outside Air Damper 0-50%[2]
B Motorized Outside Air Damper 0-50%
C Economizer, Dry Bulb 0-100% without Barometric Relief[5]
D Economizer, Dry Bulb 0-100% with Barometric Relief[5]
E Economizer, Reference Enthalpy 0-100% without Barometric Relief[5]
F Economizer, Reference Enthalpy 0-100% with Barometric Relief[5]
G Economizer, Comparative Enthalpy 0-100% without Barometric Relief[5]
H Economizer, Comparative Enthalpy 0-100% with Barometric Relief[5]
K Low Leak Economizer with Barometric Relief
M Low Leak Economizer with Reference Enthalpy with Barometric Relief
P Low Leak Economizer with Comparative Enthalpy with Barometric Relief

Digit 15 - Supply Fan/Drive Type/ Motor

0 Standard Drive[4]
6 Single Zone VAV[21]
E VAV Supply Air Temperature Control Standard Motor[21]

Digit 16 - Hinged Service Access/Filters

0 Standard Panels/Standard Filters
A Hinged Access Panels/Standard Filters
B Standard Panels/2″ MERV 8 Filters
C Hinged Access Panels/2″ MERV 8 Filters
D Standard Panels/2″ MERV 13 Filters
E Hinged Access Panels/2″ MERV 13 Filters

Digit 17 - Condenser Coil Protection

0 Standard Coil
1 Standard Coil with Hail Guard
2 Black Epoxy Pre-Coated Condenser Coil
3 Black Epoxy Pre-Coated Condenser Coil with Hail Guard
4 CompleteCoat™ Condenser Coil
5 CompleteCoat™ Condenser Coil with Hail Guard

Digit 18 - Through-the-Base Provisions

0 No Through-the-Base Provisions
A Through-the-Base Electric[6]
B Through-the-Base Gas Piping[13]
C Through-the-Base Electric and Gas Piping[13]

Digit 19 - Disconnect/Circuit Breaker (three-phase only)

0 No Disconnect/No Circuit Breaker
1 Unit Mounted Non-Fused Disconnect[6]
2 Unit Mounted Circuit Breaker[6]

Digit 20 - Convenience Outlet

0 No Convenience Outlet
A Unpowered Convenience Outlet
B Powered Convenience Outlet (three-phase only)[7]

Digit 21 - Communications Options

0 No Communications Interface
1 Trane Communications Interface
2 LonTalk® Communications Interface
3 Novar 2024 Controls
4 Novar 3051 Controls without Zone Sensor
5 Novar 3051Controls Interface with DCV
6 BACnet® Communications Interface

Digit 22 - Refrigeration System Option

0 Standard Refrigeration System[8]
B Dehumidification Option[17]

Digit 23 - Refrigeration Controls

Note: *Applicable to Digit 7 = E*

0 No Refrigeration Control[3]
1 Frostat
2 Crankcase Heater[1]
3 Frostat and Crankcase Heater[1]

Digit 24 - Smoke Detector[14]

0 No Smoke Detector
A Return Air Smoke Detector[9,10]
B Supply Air Smoke Detector
C Supply and Return Air Smoke Detectors[9,10]
D Plenum Smoke Detector

Digit 25 - System Monitoring Controls

0 No Monitoring Control[11]
1 Clogged Filter Switch[11]
2 Fan Failure Switch[11]
3 Discharge Air Sensing Tube[11]
4 Clogged Filter Switch and Fan Failure Switch[11]
5 Clogged Filter Switch and Discharge Air Sensing Tube[11]
6 Fan Failure Switch and Discharge Air Sensing Tube[11]
7 Clogged Filter Switch, Fan Failure Switch and Discharge Air Sensing Tube[11]
8 Novar Return Air Sensor (NOVAR 2024)[12,20]
9 Novar Zone Temp Sensor (NOVAR 3051)[15,20]
A Condensate Drain Pan Overflow Switch
B Clogged Filter Switch[11] and Condensate Drain Pan Overflow Switch
C Fan Failure Switch[11] and Condensate Drain Pan Overflow Switch
D Discharge Air Sensing[11] and Condensate Drain Pan Overflow Switch
E Clogged Filter Switch[11], Fan Failure Switch[11] and Condensate Drain Pan Overflow Switch
F Clogged Filter Switch[11], Discharge Air Sensing Tube[11] and Condensate

Drain Pan Overflow Switch
G Fan Failure Switch[11], Discharge Air Sensing Tube[11] and Condensate Drain Pan Overflow Switch
H Clogged Filter Switch[11], Fan Failure Switch[11], Discharge Air Sensing[11] and Condensate Drain Pan Overflow Switch

Digit 26 - System Monitoring Controls

0 No Monitoring Controls
A Demand Control Ventilation (CO_2)[18,19]
B Low Leak Economizer with FDD (Fault Detection & Diagnostics)
C FDD (Fault Detection & Diagnostics) with DCV (Demand Control Ventilation)

Digit 27 - Unit Hardware Enhancements

0 No Enhancements
1 Stainless Steel Drain Pan

Digit 31 - Advanced Unit Controls

0 Standard Unit Controls
1 Human Interface

Model Number Notes

1. Standard on all variable stage units.
2. Manual outside air damper will ship factory supplied within the unit, but must be field installed.
3. High pressure control is standard on all units.
4. Constant CFM direct drive is standard for 3-5 Ton variable stage units.

Digit 15 = 0, 6
3 Phase (3-5 ton) - High Efficiency Constant cfm

5. Economizer with Barometric Relief is for downflow configured units only. Order Economizer without Barometric Relief for horizontal configuration. Barometric Relief for horizontal configured units must be ordered as field installed accessory.
6. Through-the-base electric required when ordering disconnect/circuit breaker options.
7. Requires use of Disconnect or Circuit Breaker.

Not Available
High Efficiency
3-5 ton w/Standard Indoor Motor w/460V

8. Standard metering devices are TXVs.
9. The return air smoke detector may not fit up or work properly on the Precedent units when used in conjunction with 3rd party accessories such as bolt on heat wheels, economizers and power exhaust. Do not order the return air smoke detectors when using this type of accessory.
10. Return Air Smoke Detector cannot be ordered with Novar Controls.
11. These options are standard when ordering Novar Controls.
12. This option is used when ordering Novar Controls.
13. Includes gas piping and shutoff (field assembly required).
14. Not available with high temperature duct sensor accessory.
15. Novar Sensor utilized with Digit 21 = (4) Novar 3051 Controls without Zone Sensor.
16. Available for T/Y 3,4,5 ton high efficiency models.
17. Requires selection of 2" Pleated Filters (option B or C) for Digit 16.
18. Demand Control Ventilation not available with electromechanical controls.
19. Demand Control Ventilation Option includes wiring only. The CO_2 sensor is a field-installed only option.
20. Novar is not available with SZVAV products.
21. Discharge Air Sensing is also standard equipment on units with Single Zone and Supply Air Temperature Control VAV.

General Information

Unit Inspection

As soon as the unit arrives at the job site

- Verify that the nameplate data matches the data on the sales order and bill of lading (including electrical data).
- Verify that the power supply complies with the unit nameplate specifications.
- Visually inspect the exterior of the unit, including the roof, for signs of shipping damage.

If the job site inspection of the unit reveals damage or material shortages, file a claim with the carrier immediately. Specify the type and extent of the damage on the "bill of lading" before signing.

- Visually inspect the internal components for shipping damage as soon as possible after delivery and before it is stored. Do not walk on the sheet metal base pans.
- If concealed damage is discovered, notify the carrier's terminal of damage immediately by phone and by mail. Concealed damage must be reported within 15 days.
- Request an immediate joint inspection of the damage by the carrier and the consignee. Do not remove damaged material from the receiving location. Take photos of the damage, if possible. The owner must provide reasonable evidence that the damage did not occur after delivery.
- Notify the appropriate sales representative before installing or repairing a damaged unit.

Storage

Take precautions to prevent condensate from forming inside the unit's electrical compartments and motors if:

1. the unit is stored before it is installed; or,
2. the unit is set on the roof curb, and temporary heat is provided in the building. Isolate all side panel service entrances and base pan openings (e.g., conduit holes, Supply Air and Return Air openings, and flue openings) from the ambient air until the unit is ready for start-up.

Note: *Do not use the unit's heater for temporary heat without first completing the start-up procedure detailed under "Unit Start-Up," p. 48.*

The manufacturer will not assume any responsibility for equipment damage resulting from condensate accumulation on the unit's electrical and/or mechanical components.

Unit Nameplate

A Mylar unit nameplate is located on the unit's corner support next to the filter access panel. It includes the unit model number, serial number, electrical characteristics, refrigerant charge, as well as other pertinent unit data.

Compressor Nameplate

The nameplate for the compressors are located on the side of the compressor.

Microchannel Condenser Barcode ID

Barcode decal used for condenser coil part identification can be located on the vertical header and top of coil's inlet/outlet side.

Unit Description

Before shipment, each unit is leak tested, dehydrated, charged with refrigerant and compressor oil, and run tested for proper control operation.

The condenser coils are either aluminum fin, mechanically bonded to copper tubing or all aluminum microchannel.

Direct-drive, vertical discharge condenser fans are provided with built-in thermal overload protection.

There are two control systems offered for these units. The electromechanical control option uses a thermostat to perform unit functions. The ReliaTel™ Control Module is a microelectronic control system that is referred to as "Refrigeration Module" (RTRM). The acronym RTRM is used extensively throughout this document when referring to the control system network.

These modules through Proportional/Integral control algorithms perform specific unit functions that governs unit operation in response to; zone temperature, supply air temperature, and/or humidity conditions depending on the application. The stages of capacity control for these units are achieved by starting and stopping the compressors.

The RTRM is mounted in the control panel and is factory wired to the respective internal components. The RTRM receives and interprets information from other unit modules, sensors, remote panels, and customer binary contacts to satisfy the applicable request for cooling.

Economizer Control Actuator (Optional)

Electromechanical Control

The ECA monitors the mixed air temperature, ambient dry bulb temperature and local minimum position setpoint sensors, if selected, to control dampers to an accuracy of +/- 5% of stroke. The actuator is spring returned to the closed position any time that power is lost to the unit. It is capable of delivering up to 25 inch pounds of torque and is powered by 24 VAC.

ReliaTel™ Control

The ECA monitors the mixed air temperature, return air temperature, minimum position setpoint (local or remote), power exhaust setpoint, CO_2 setpoint, CO_2, and ambient dry bulb/enthalpy sensor or comparative humidity (return air humidity against ambient humidity)

sensors, if selected, to control dampers to an accuracy of +/- 5% of stroke. The actuator is spring returned to the closed position any time that power is lost to the unit. It is capable of delivering up to 25 inch pounds of torque and is powered by 24 VAC.

RTCI - ReliaTel™ Trane Communication Interface (Optional)

This module is used when the application calls for an ICSTM building management type control system. It allows the control and monitoring of the system through an ICS panel. The module can be ordered from the factory or ordered as a kit to be field installed. Follow the installation instruction that ships with each kit when field installation is necessary.

RLCI - ReliaTel™ LonTalk Communication Interface (Optional)

This module is used when the application calls for an ICSTM building management type control system that is LonTalk. It allows the control and monitoring of the system through an ICS panel. The module can be ordered from the factory or ordered as a kit to be field installed. Follow the installation instruction that ships with each kit when field installation is necessary.

RBCI - ReliaTel™ BACnet Communications Interface (Optional)

This module is used when the application calls for an open BACnet protocol. It allows the control and monitoring of the system through an ICS panel. The module can be ordered from the factory or as a kit to be field installed. Follow the installation instructions that ships with each kit when field installation is necessary.

RTOM - ReliaTel™ Options Module (Standard on 17 Plus, 7.5 Ton & 8.5 Ton High Efficiency with ReliaTel, 10 Ton with ReliaTel)

The RTOM monitors the supply fan proving, clogged filter, supply air temperature, exhaust fan setpoint, supply air tempering, Frostat™, smoke detector, and Variable Speed Fan Control (17 Plus units only). Refer to system input devices and functions for operation.

System Input Devices & Functions

The RTRM must have a zone sensor or thermostat input in order to operate the unit. The flexibility of having several mode capabilities depends upon the type of zone sensor or thermostat selected to interface with the RTRM.

The descriptions of the following basic Input Devices used within the RTRM network are to acquaint the operator with their function as they interface with the various modules. Refer to the unit's electrical schematic for the specific module connections.

The following controls are available from the factory for field installation.

Supply Fan Failure Input (Optional)

The Fan Failure Switch can be connected to sense indoor fan operation:

FFS (Fan Failure Switch) If air flow through the unit is not proven by the differential pressure switch connected to the RTOM (factory set point 0.07 "w.c.) within 40 seconds nominally, the RTRM will shut off all mechanical operations, lock the system out, send a diagnostic to ICS, and the SERVICE output will flash. The system will remain locked out until a reset is initiated either manually or through ICS.

Clogged Filter Switch (Optional)

The unit mounted clogged filter switch monitors the pressure differential across the return air filters. It is mounted in the filter section and is connected to the RTOM. A diagnostic SERVICE signal is sent to the remote panel if the pressure differential across the filters is at least 0.5" w.c. The contacts will automatically open when the pressure differential across the filters decreases to approximately 0.4" w.c. The clogged filter output is energized when the supply fan is operating and the clogged filter switch has been closed for at least 2 minutes. The system will continue to operate regardless of the status of the filter switch.

Note: *On units equipped with factory installed MERV 13 filters, a clogged filter switch with different pressure settings will be installed. This switch will close when the differential pressure is approximately 0.8' w.c. and open when the differential falls to 0.7" w.c.*

Condensate Drain Pan Overflow Switch (Optional)

ReliaTel™ Option

This input incorporates the Condensate Overflow Switch (COF) mounted on the drain pan and the ReliaTel Options Module (RTOM). When the condensate level reaches the trip point for 6 continuous seconds, the RTOM will shut down all unit functions until the overflow condition has cleared. The unit will return to normal operation after 6 continuous seconds with the COF in a non-tripped condition. If the condensate level causes unit shutdown more than 2 times in a 3 days period, the unit will be locked-out of operation requiring manual reset of diagnostic system through Zone Sensor or Building Automation System (BAS). Cycling unit power will also clear the fault.

Electromechanical Option

This input incorporates the condensate overflow switch (COF), COF Relay, COF Time Delay. When the condensate level reaches the trip point, the COF relay energizes and opens the 24VAC control circuit which disables the unit. Once the 24VAC control circuit is opened, a delay timer will prevent unit start-up for three minutes.

Compressor Disable (CPR1/2)

This input incorporates the low pressure control (LPC) of each refrigeration circuit and can be activated by opening a field supplied contact installed on the LTB.

If this circuit is open before the compressor is started, the compressor will not be allowed to operate. Anytime this circuit is opened for 1 continuous second during compressor operation, the compressor for that circuit is immediately turned "Off". The compressor will not be allowed to restart for a minimum of 3 minutes should the contacts close.

If four consecutive open conditions occur during the first three minutes of operation, the compressor for that circuit will be locked out, a diagnostic communicated to the remote panel (if installed), and a manual reset will be required to restart the compressor.

Low Pressure Control

ReliaTel™ Control

When the LPC is opened for 1 continuous second, the compressor for that circuit is turned off immediately. The compressor will not be allowed to restart for a minimum of 3 minutes.

If four consecutive open conditions occur during an active call for cooling, the compressor will be locked out, a diagnostic communicated to ICS™, if applicable, and a manual reset required to restart the compressor. On dual compressor units only the affected compressor circuit is locked out.

Electromechanical Control

When the LPC is opened, the compressor for that circuit is turned off immediately. The compressor will restart when the LPC closes.

High Pressure Control

ReliaTel™ Control

The high pressure controls are wired in series between the compressor outputs on the RTRM and the compressor contactor coils. If the high pressure control switch opens, the RTRM senses a lack of current while calling for cooling and locks the compressor out.

If four consecutive open conditions occur during an active call for cooling, the compressor will be locked out, a diagnostic communicated to ICS™, if applicable, and a manual reset required to restart the compressor. On dual compressor units only the affected compressor circuit is locked out.

Electromechanical Control

When the HPC is opened, the compressor for that circuit is turned off immediately. The compressor will restart when the HPC closes.

Power Exhaust Control (Optional)

ReliaTel™ Control

The power exhaust fan is started whenever the position of the economizer dampers meets or exceed the power exhaust setpoint when the indoor fan is on.

With the optional ventilation override accessory, the power exhaust fan is independent of the indoor fan.

The setpoint panel is located in the return air section and is factory set at 25%.

Electromechanical Control

The power exhaust fan is started whenever the indoor fan is on and the adjustable damper limit switch DLS is closed.

Lead/Lag Control (Dual Circuit Only)

ReliaTel™ Control Only

Lead/Lag is a selectable input located on the RTRM. The RTRM is configured from the factory with the Lead/Lag control disabled. To activate the Lead/Lag function, simply cut the wire connected to J3-8 at the RTRM. When it is activated, each time the designated lead compressor is shut off due to the load being satisfied, the lead compressor or refrigeration circuit switches. When the RTRM is powered up, i.e. after a power failure, the control will default to the number one circuit compressor. Lead/Lag is not available on Multi-Speed Indoor Fan, or Single Zone Variable Air Volume (SZVAV) products.

Zone Sensor Module (ZSM) (BAYSENS106*)

This electronic sensor features three system switch settings (Heat, Cool, and Off) and two fan settings (On and Auto). It is a manual changeover control with single setpoint. (Cooling Setpoint Only)

Zone Sensor Module (ZSM) (BAYSENS108*)

This electronic sensor features four system switch settings (Heat, Cool, Auto, and Off) and two fan settings (On and Auto). It is a manual or auto changeover control with dual setpoint capability. It can be used with a remote zone temperature sensor BAYSENS077*.

Zone Sensor (BAYSENS110*)

This electronic sensor features four system switch settings (Heat, Cool, Auto, and Off) and two fan settings (On and Auto) with four system status LED's. It is a manual or auto changeover control with dual setpoint capability. It can be used with a remote zone temperature sensor BAYSENS077*.

Wall Mounted Relative Humidity Sensor (BAYSENS036*)

Field installed, wall mounted humidity sensor is used to control activation of Enhanced Dehumidification and the Hot Gas Reheat Dehumidification options. Humidity set points can be selected for relative humidity levels between

40% and 60% by adjusting the DEHUMID setting on the ReliaTel Options Module. See Figure 42, p. 37.

Duct Mounted Relative Humidity Sensor (BAYSENS037*)

Field installed, duct mounted humidity sensor is used to control activation of Enhanced Dehumidification and the hot gas reheat dehumidification options. Humidity set points can be selected for relative humidity levels between 40% and 60% by adjusting the DEHUMID setting on the ReliaTel Options Module. See Figure 42, p. 37.

Programmable Zone Sensor - (BAYSENS119*)

This 7 day programmable sensor features 2, 3 or 4 periods for Occupied or Unoccupied programming per day. If the power is interrupted, the program is retained in permanent memory. If power is off for an extended period of time, only the clock and day may have to be reset.

The Zone Sensor allows selection of 2, 3 or 4 system modes (Heat, Cool, Auto, and Off), two fan modes (On and Auto). It has dual temperature selection with programmable start time capability.

The occupied cooling set point ranges between 45 and 98 ° F. The heating set point ranges between 43 and 96°F.

A liquid crystal display (LCD) displays zone temperature, temperature set points, day of the week, time, and operational mode symbols.

The Option Menu is used to enable or disable applicable functions, i.e.; Morning Warm-up, Economizer minimum position override during unoccupied status, Fahrenheit or Centigrade, Supply air tempering, Remote zone temperature sensor, 12/24 hour time display, Smart fan, and Computed recovery.

During an occupied period, an auxiliary relay rated for 1.25 amps @ 30 volts AC with one set of single pole double throw contacts is activated.

Status Inputs (4 Wires Optional)

The ZSM can be wired to receive four (4) operating status signals from the RTRM (HEAT, COOL, SYSTEM "ON", SERVICE).

Four (4) wires from the RTRM should be connected to the appropriate terminals (7, 8, 9 & 10) on the ZSM.

Remote Zone Sensor (BAYSENS073*)

This electronic sensor features remote zone sensing and timed override with override cancellation. It is used with a Trane Integrated Comfort™ building management system.

Remote Zone Sensor (BAYSENS074*)

This electronic sensor features single setpoint capability and timed override with override cancellation. It is used with a Trane Integrated Comfort™ building management system.

Remote Zone Sensor (BAYSENS016*)

This bullet type temperature sensor can be used for outside air (ambient) sensing, return air temperature sensing, supply air temperature sensing, remote temperature sensing (uncovered). Wiring procedures vary according to the particular application and equipment involved. Refer to the unit's wiring diagrams for proper connections.

Remote Zone Sensor (BAYSENS077*)

This electronic sensor can be used with BAYSENS106*, 108*, 110*, 119* Remote Panels. When this sensor is wired to a BAYSENS119* Remote Panel, wiring must be 18 AWG ShieldedTwisted Pair (Belden 8760 or equivalent). Refer to the specific Remote Panel for wiring details.

Wireless Zone Sensor (BAYSENS050*)

This electronic sensor features five system settings (Auto, Off, Cool, Heat, and Emergency Heat) and with On and Auto fan settings. It is a manual or auto changeover control with dual setpoint capability. Other features include a timed override function, lockable system settings, and Fahrenheit or Celsius temperature display. Included with the wireless zone sensor will be a receiver that is to be mounted inside the unit, a mounting bracket, and a wire harness.

Electromechanical Control

The unit must have a thermostat to operate.

- BAYSTAT151
  - Single Stage - 1 Heat/1 Cool
- BAYSTAT155
  - Multi Stage - 3 Heat/2 Cool - Can be Used for Economizer Operation
- BAYSENS150
  - Multi stage - 3 Heat/2 Cool Programmable Thermostat

High Temperature Sensor (BAYFRST001*)

This sensor connects to the RTRM Emergency Stop Input on the LTB and provides high limit "shutdown" of the unit. The sensor is used to detect high temperatures due to a high thermal event in the air conditioning or ventilation ducts. The sensor is designed to mount directly to the sheet metal duct. Each kit contains two sensors. The return air duct sensor (X1310004001) is set to open at 135°F. The supply air duct sensor (X1310004002) is set to open at 240°F. The control can be reset after the temperature has been lowered approximately 25°F below the cutout setpoint.

Evaporator Frost Control

ReliaTel™ Option

This input incorporates the Frostat™ control (FOS) mounted in the indoor coil circuit and can be activated by

closing a field supplied contact installed in parallel with the FOS.

If this circuit is closed before the compressor is started, the compressor will not be allowed to operate. Anytime this circuit is closed for 1 continuous second during compressor operation, the compressor for that circuit is immediately turned "Off". The compressor will not be allowed to restart for a minimum of 3 minutes should the FOS open.

Frostat is standard on multi-speed indoor motors and single zone VAV products (SZVAV).

Electromechanical Option

This input incorporates the Frostat™ control (FOS) mounted in the indoor coil circuit and can be activated by opening a field supplied contact installed in series with the FOS.

If this circuit is open before the compressor is started, the compressor will not be allowed to operate. Anytime this circuit is opened during compressor operation, the compressor for that circuit is immediately turned "Off". The compressor will restart when the FOS closes.

Discharge Line Temp Switch (DLTS)

The DLTS is looped in series with HPC and LPC. It prevents compressor from overheating (over 300 F° dome temp) in case of indoor fan failure (cooling) or outdoor fan failure (heating).

Smoke Detector Sensor (Optional)

This sensor provides high limit "shutdown" of the unit and requires a manual reset. The sensor is used to detect smoke in the air conditioning or ventilation ducts.

Notes:

- *The supply air smoke detector samples supply air. The return and plenum air smoke detectors sample return air. The smoke detectors are designed to shut off the unit if smoke is sensed. This function is performed by sampling the airflow entering the unit at the return air opening. Follow the instructions provided below to assure that the airflow through the unit is sufficient for adequate sampling. Failure to follow these instructions will prevent the smoke detectors from performing its design function.*
- *Airflow through the unit is affected by the amount of dirt and debris accumulated on the indoor coil and filters. To insure that airflow through the unit is adequate for proper sampling by the return air smoke detector, complete adherence to the maintenance procedures, including recommended intervals between filter changes, and coil cleaning is required.*
- *Periodic checks and maintenance procedures must be performed on the smoke detector to insure that it will function properly. For detailed instructions concerning these checks and procedures, refer to the appropriate section(s) of the smoke detector Installation and Maintenance Instructions provided with the literature package for this unit.*

In order for the supply air smoke detector or return air smoke detector to properly sense smoke in the supply air stream or return air stream, the air velocity entering the smoke detector unit must be between 500 and 4000 feet per minute. Equipment covered in this manual will develop an airflow velocity that falls within these limits over the entire airflow range specified in the evaporator fan performance tables.

Phase Monitor

This sensor monitors voltage between the 3 conductors of the 3 phase power supply. Two LED lights are provided:

- The green light indicates that a balanced 3 phase supply circuit is properly connected.
- The red light indicates that unit operation has been prevented. There are two conditions that will prevent unit operation:
  - The power supply circuit is not balanced with the proper phase sequence of L1, L2, L3 for the 3 conductors of a 3 phase circuit.
  - The line to line voltage is not between 180 volts and 633 volts.

Single Zone Variable Air Volume / Displacement Ventilation (Optional)

This sensor offers full supply fan modulation across the available airflow range. In addition to full supply fan modulation, the unit controls the discharge air temperature to a varying discharge air temperature setpoint in order to maintain Space Temperature.

Human Interface - 5 Inch Color Touchscreen (Optional)

The 5 inch ColorTouchscreen Human Interface provides an intuitive user interface to the rooftop unit that speeds up unit commissioning, shortens unit troubleshooting times, and enhances preventative maintenance measures. The human interface includes several features including:

- Data trending capabilities by means of time series graphs
- Historical alarm messages
- Real-time sensor measurements
- On board system setpoints
- USB port that enables the downloading of component runtime information as well as trended historical sensor data
- Customized reports

Unit Dimensions

Figure 1, p. 15 illustrates the minimum operating and service clearances for either a single or multiple unit installation. These clearances are the minimum distances necessary to assure adequate serviceability, cataloged unit capacity, and peak operating efficiency.

Providing less than the recommended clearances may result in condenser coil starvation, “short-circuiting” of exhaust and economizer airflows, or recirculation of hot condenser air.

Figure 1. Typical installation clearances for single & multiple unit applications

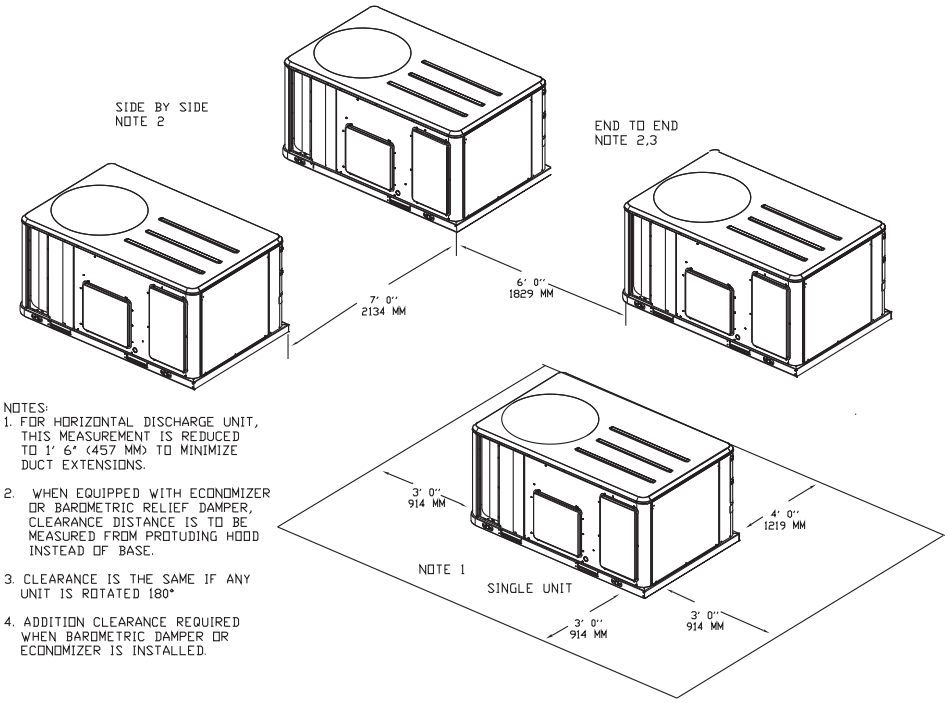

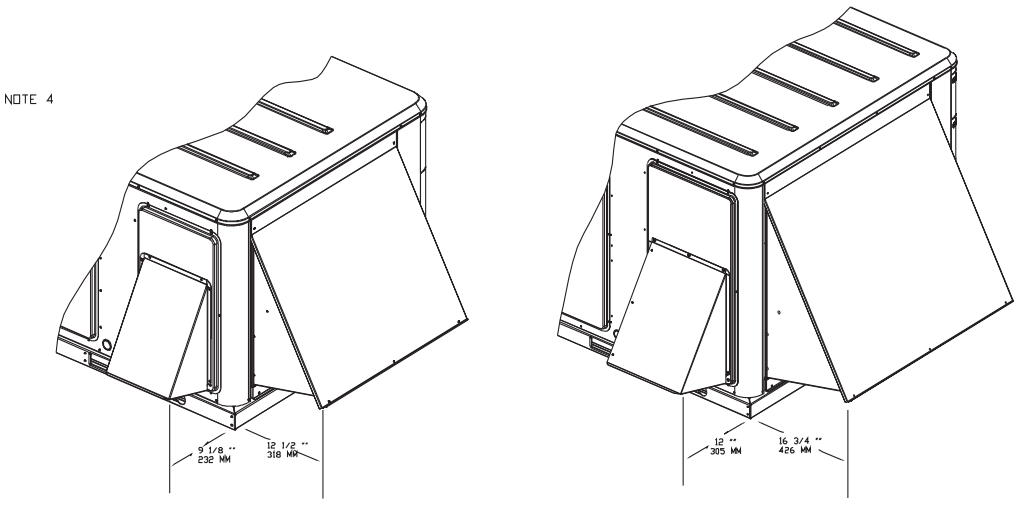

YSC036-060E & YHC036E, YHC037E Units

YSC072-120F, YHC048-102F, YHC047-120E Units

Figure 2. 3-5 ton standard efficiency, 3 ton high efficiency

Notes:
1. All dimensions are in inches/millimeters.
2. ½ NPT Gas Connection

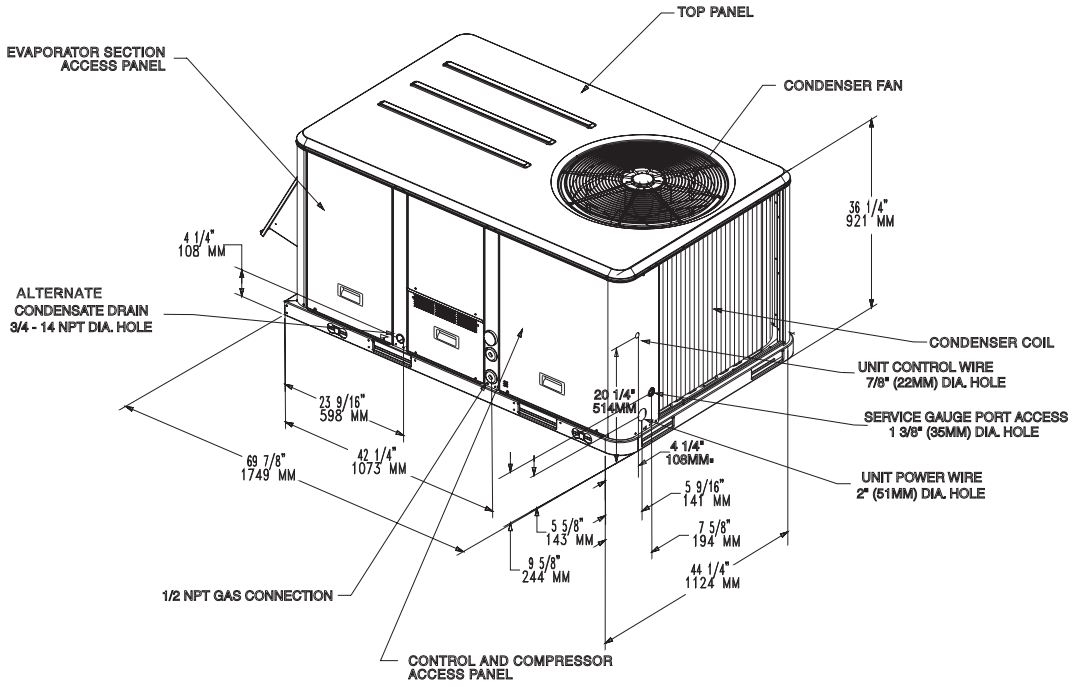

Figure 3. 3-5 ton standard efficiency, 3 ton high efficiency - roof curb

Note: All dimensions are in inches/millimeters.

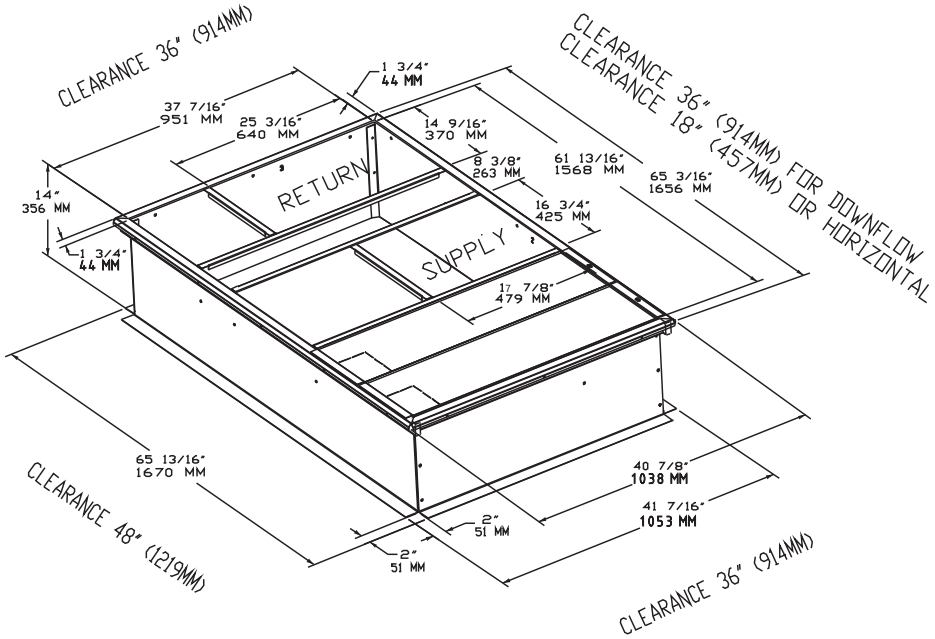

Figure 4. 3-5 ton standard efficiency, 3 ton high efficiency - unit clearance and roof opening

Note: All dimensions are in inches/millimeters.

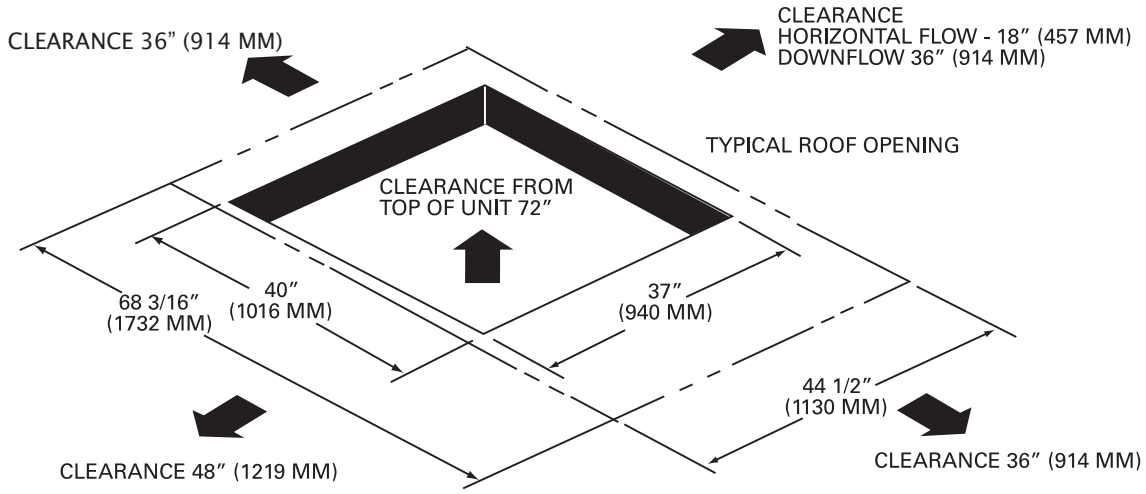

Figure 5. 6, 7½ (single) ton standard efficiency, 4-5 ton high efficiency

Note: All dimensions are in inches/millimeters.

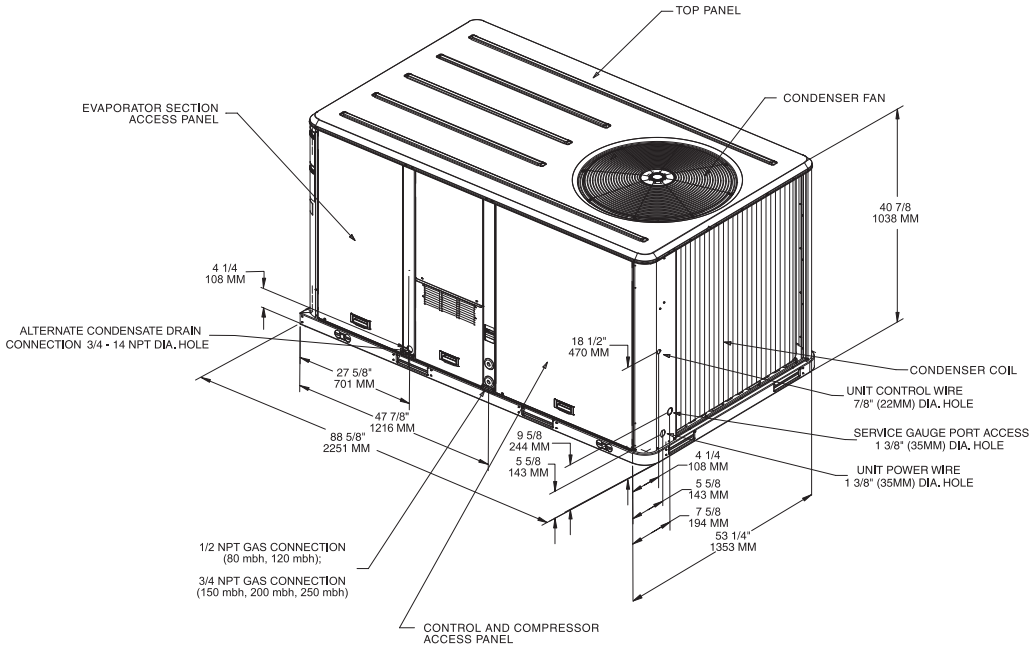

Figure 6. 6, 7½ (single) ton standard efficiency, 4-5 ton high efficiency - roof curb

Note: All dimensions are in inches/millimeters.

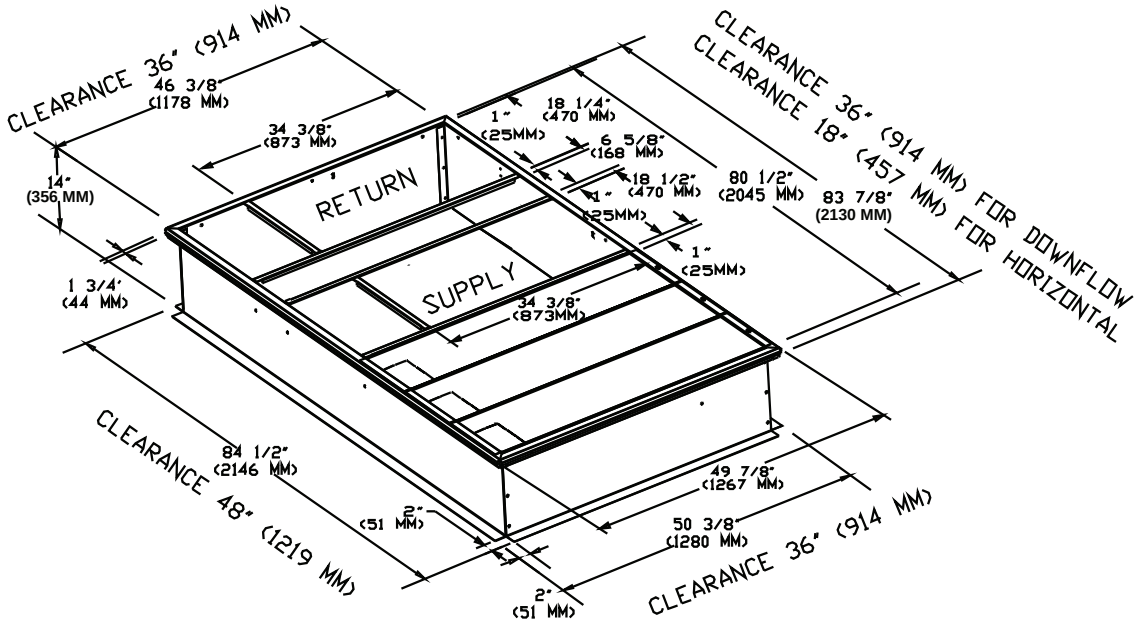

Figure 7. 6, 7½ (single) ton standard efficiency, 4-5 ton high efficiency - unit clearance and roof opening

Note: All dimensions are in inches/millimeters.

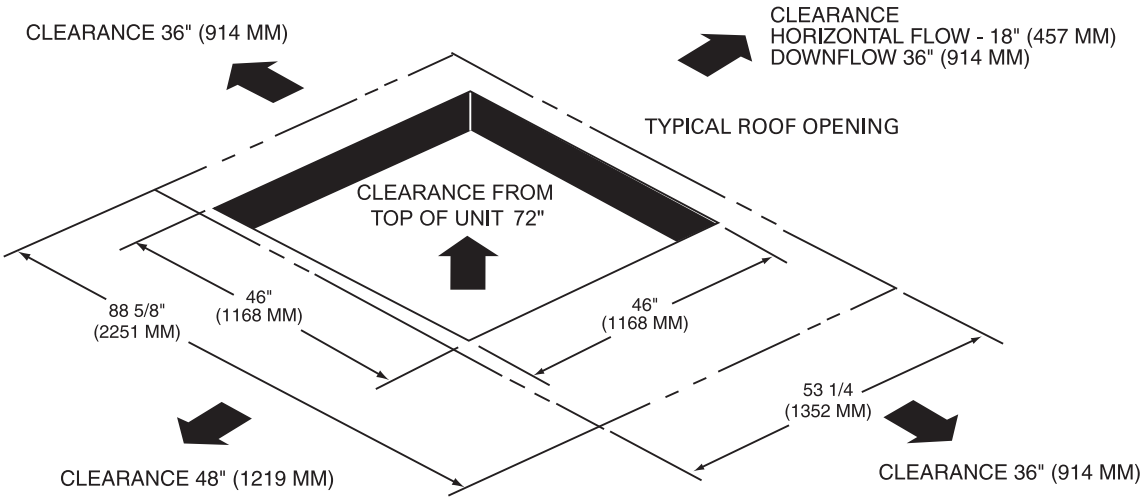

Figure 8. 7½ ton (dual) - 10 ton standard efficiency, 6 - 8½ (MCHE) ton high efficiency, 6 ton dehumidification

Note: All dimensions are in inches/millimeters.

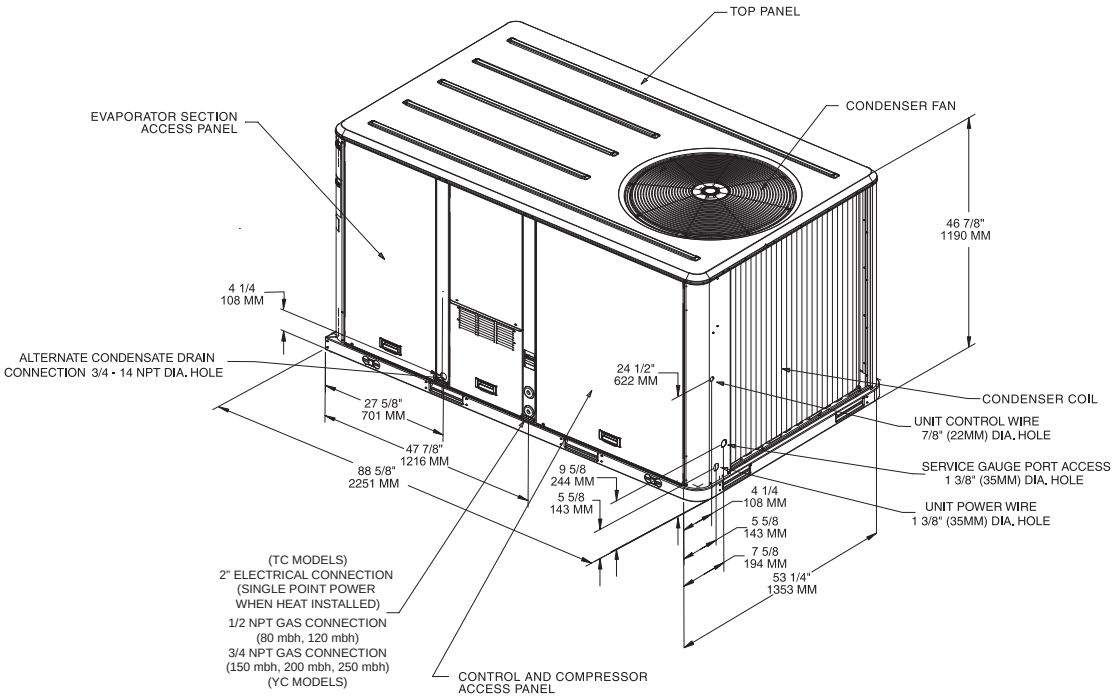

Figure 9. 7½ ton (dual) - 10 ton standard efficiency, 6 - 8½ (MCHE) ton high efficiency, 6 ton dehumidification roof curb

Note: All dimensions are in inches/millimeters.

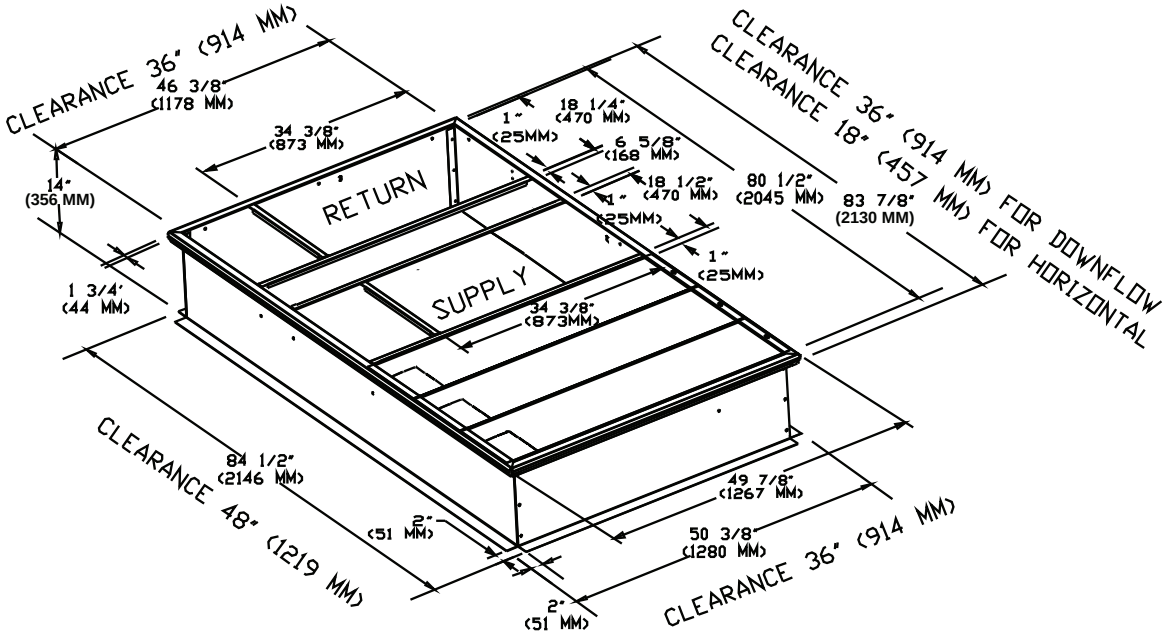

Figure 10. 7½ ton (dual) - 10 tons standard efficiency, 6 - 7½ (MCHE) ton high efficiency, 6 ton dehumidification unit clearance and roof opening

Note: All dimensions are in inches/millimeters.

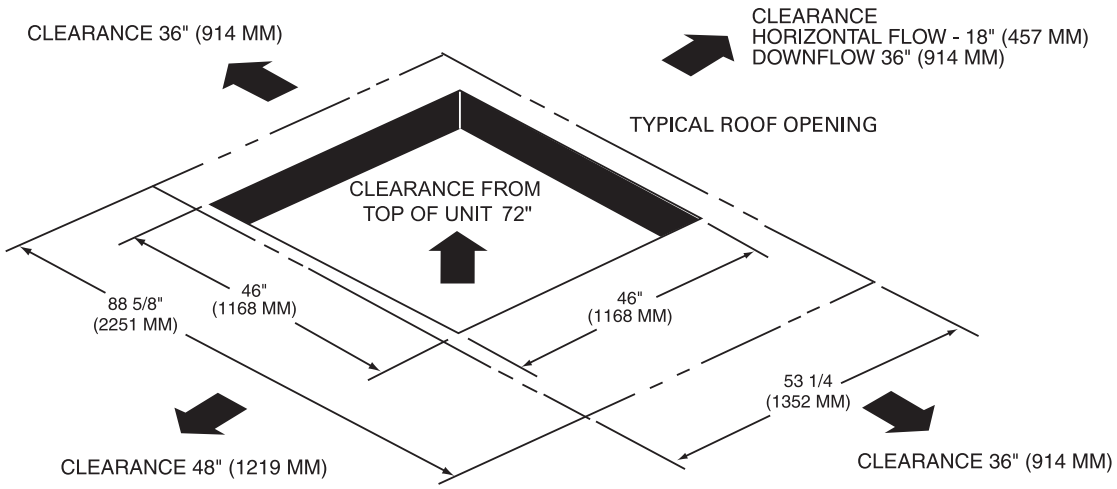

Figure 11. 10 ton high efficiency

Notes:
1. All dimensions are in inches/millimeters.
2. ½ or ¾ NPT Gas Connection

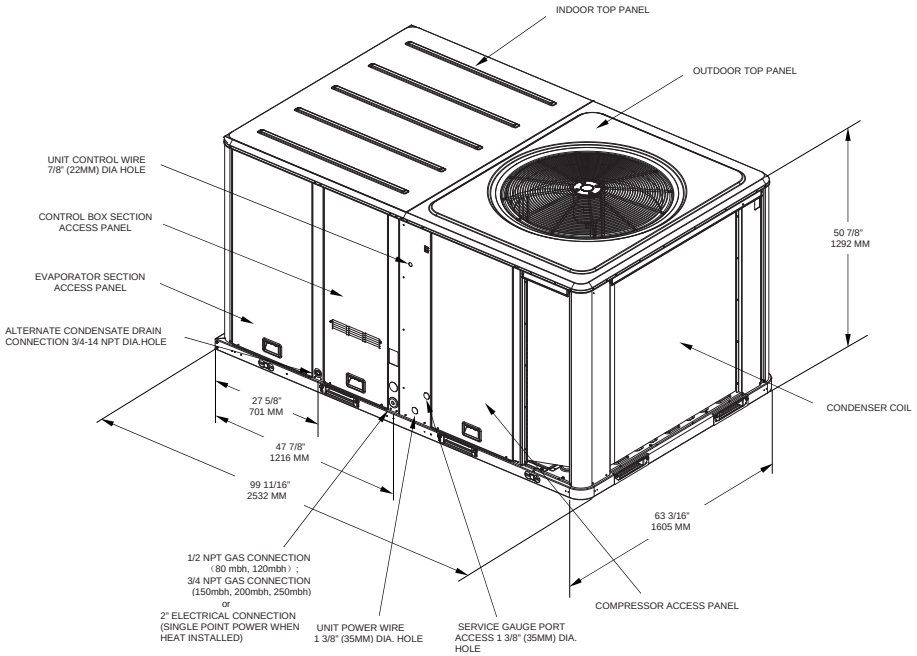

Figure 12. 10 ton high efficiency - roof curb

Notes:
1. All dimensions are in inches/millimeters.

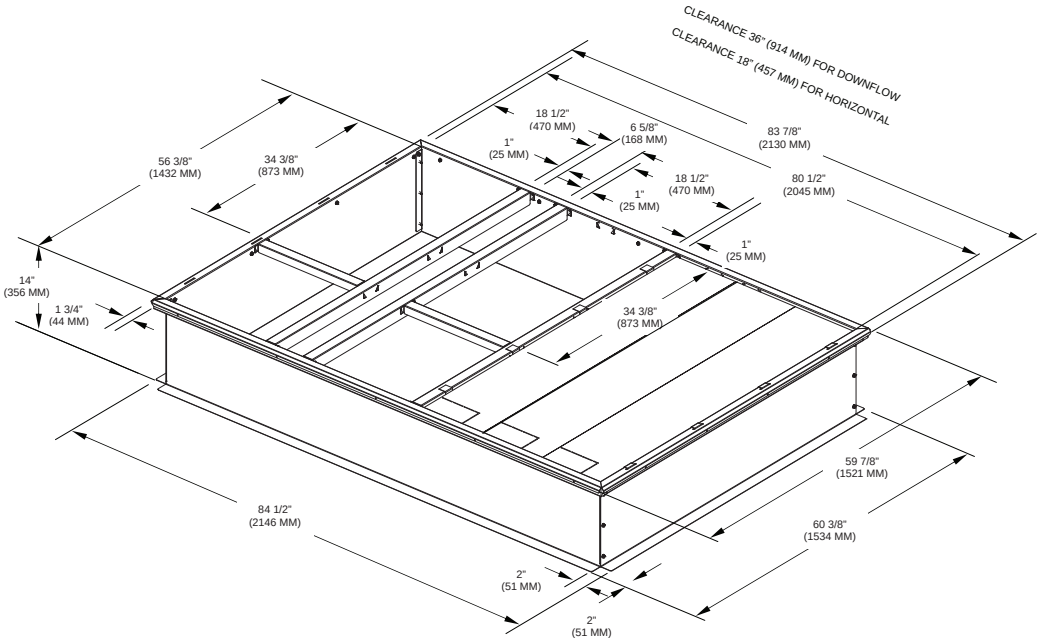

Figure 13. 10 ton high efficiency- unit clearance and roof opening

Notes:
1. All dimensions are in inches/millimeters.

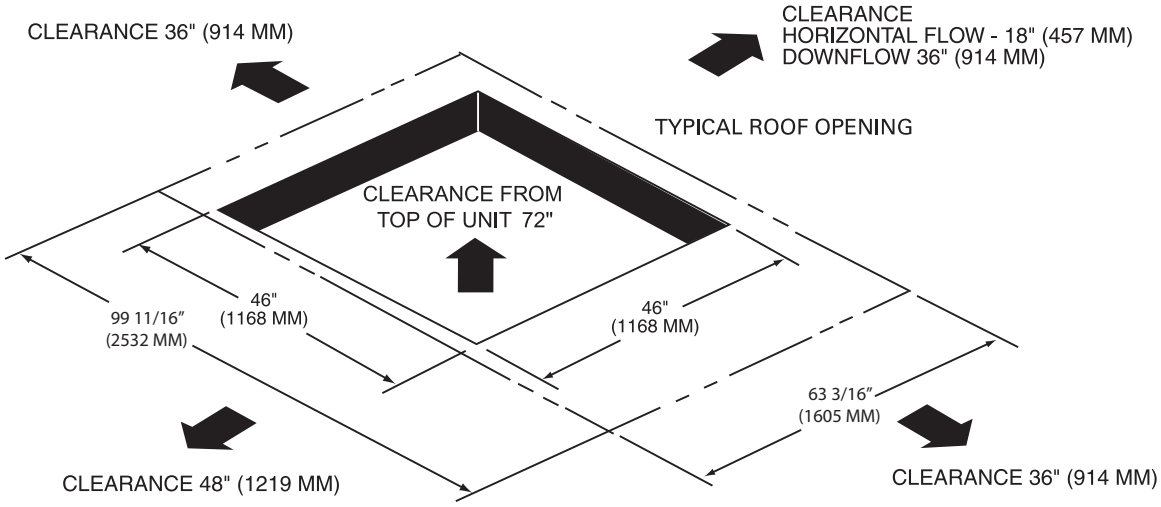

Installation

Pre-Installation

⚠WARNING

Fiberglass Wool!

Product contains fiberglass wool. Disturbing the insulation in this product during installation, maintenance or repair will expose you to airborne particles of glass wool fibers and ceramic fibers known to the state of California to cause cancer through inhalation. You MUST wear all necessary Personal Protective Equipment (PPE) including gloves, eye protection, mask, long sleeves and pants when working with products containing fiberglass wool. Exposure to glass wool fibers without all necessary PPE equipment could result in cancer, respiratory, skin or eye irritation, which could result in death or serious injury.

Precautionary Measures

- Avoid breathing fiberglass dust.
- Use a NIOSH approved dust/mist respirator.
- Avoid contact with the skin or eyes. Wear long-sleeved, loose-fitting clothing, gloves, and eye protection.
- Wash clothes separately from other clothing: rinse washer thoroughly.
- Operations such as sawing, blowing, tear-out, and spraying may generate fiber concentrations requiring additional respiratory protection. Use the appropriate NIOSH approved respiration in these situations.

First Aid Measures

Eye Contact - Flush eyes with water to remove dust. If symptoms persist, seek medical attention.

Skin Contact - Wash affected areas gently with soap and warm water after handling.

Procedure

⚠WARNING

Heavy Objects!

Ensure that all the lifting equipment used is properly rated for the weight of the unit being lifted. Each of the cables (chains or slings), hooks, and shackles used to lift the unit must be capable of supporting the entire weight of the unit. Lifting cables (chains or slings) may not be of the same length. Adjust as necessary for even unit lift. Other lifting arrangements could cause equipment or property damage. Failure to follow instructions above or properly lift unit could result in unit dropping and possibly crushing operator/ technician which could result in death or serious injury.

⚠WARNING

Improper Unit Lift!

Test lift unit approximately 24 inches to verify proper center of gravity lift point. To avoid dropping of unit, reposition lifting point if unit is not level. Failure to properly lift unit could result in unit dropping and possibly crushing operator/technician which could result in death or serious injury and possible equipment or property-only damage.

Figure 14. Corner weights

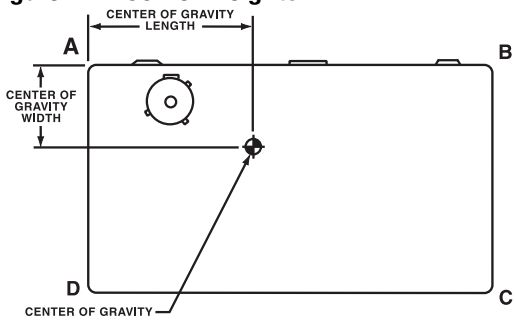

Table 1. Maximum unit & corner weights (lbs) and center of gravity dimensions (in.) - gas/electric models

Tons	Unit Model No.	Maximum Model Weights[a]		Corner Weights[b]				Center of Gravity (in.)	
		Shipping	Net	A	B	C	D	Length	Width
3	YSC036E/YHC036E	607	532	165	137	95	134	31	19
4	YSC048E	638	563	175	145	101	142	31	19
5	YSC060E	688	613	190	158	110	155	31	19
6	YSC072F	805	710	222	217	121	150	41	22
7½	YSC090F	862	767	243	221	155	149	45	21
7½	YSC092F	990	847	265	249	173	160	46	21
8½	YSC102F	1047	904	279	252	187	186	44	22
10	YSC120F	1156	1058	345	242	258	213	41	23
3	YHC037E	676	606	178	162	126	139	33	19
4	YHC048E/YHC047E	858	763	238	200	148	176	40	23
4	YHC048F	806	711	226	199	144	143	44	22
5	YHC060E/YHC067E	917	822	261	218	156	187	40	22
5	YHC060F	850	755	239	214	152	151	44	21
6	YHC072E	1025	927	296	198	205	228	41	24
6	YHC072F	965	822	250	245	174	153	47	21
7½	YHC092F	1124	1026	340	233	249	204	41	23
7½	YHC092F	1144	1046	342	241	257	206	49	23
8½	YHC102F	1133	1035	341	236	253	205	49	23
8½	YHC102F	1153	1055	343	244	261	207	49	23
10	YHC120E	1589	1372	384	378	302	308	49	28

(a) Weights are approximate.
(b) Corner weights are given for information only.

Figure 15. Rigging and center of gravity

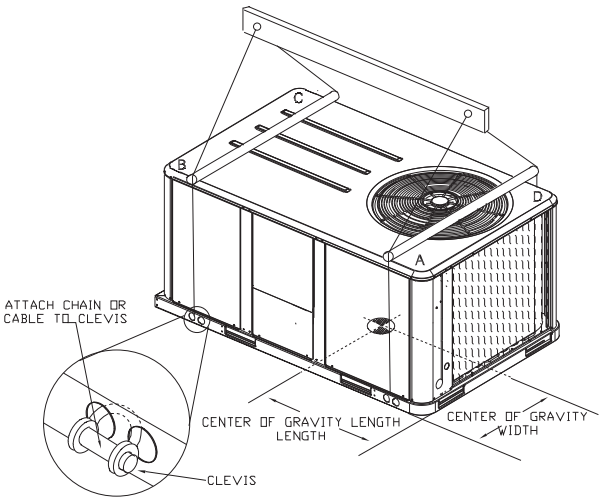

Table 2. Factory installed options (fiops)/accessory net weights (lbs)[a],[b]

	YSC036E-060E YHC036E,YHC037E	YHC047E-067E YHC048F-060F	YSC072F-102F YHC072E/F	YHC092F-102F, YSC120F	YHC120E
	Net Weight	Net Weight	Net Weight	Net Weight	Net Weight
Accessory	**3-5 Ton**	**4-5 Ton**	**6-8½ Ton**	**7½, 8½, 10 Ton**	**10 Ton**
Barometric Relief	7	10	10	10	10
Belt Drive Option (3 phase only)	31	31	—	—	—
Coil Guards	12	20	20	20	30
Economizer	26	36	36	36	36
Hinged Doors	10	12	12	12	12
Low Leak Economizer	68	93	93	93	93
Manual Outside Air Damper	16	26	26	26	26
Motorized Outside Air Damper	20	30	30	30	30
Novar Control	8	8	8	8	8
Oversized Motor	5	8	8	—	—
Powered Convenience Outlet	38	38	38	38	50
Powered Exhaust	40	40	80	80	80
Reheat Coil	12	14	15	—	30
Roof Curb	61	78	78	78	89
Smoke Detector, Supply	5	5	5	5	5
Smoke Detector, Return	7	7	7	7	7
Stainless Steel Heat Exchanger	4	6	6	6	6
Through-the-Base Electrical(c)	8	13	13	13	13
Through-the-Base Gas	5	5	5	5	5
Unit Mounted Circuit Breaker	5	5	5	5	5
Unit Mounted Disconnect	5	5	5	5	5
460V/575V IDM Transformer[c]	29	29	—	—	—

(a) Weights for options not listed are <5 lbs.
(b) Net weight should be added to unit weight when ordering factory-installed accessories.
(c) Apply weight with all 460V and 575V 17 Plus Two-Stage Cooling units.

Foundation

Horizontal Units

If the unit is installed at ground level, elevate it above the snow line. Provide concrete footings at each support location with a "full perimeter" support structure or a slab foundation for support. Refer to Table 1, p. 23 for the unit's operating and point loading weights when constructing a footing foundation.

If anchoring is required, anchor the unit to the slab using hold down bolts or isolators. Isolators should be installed to minimize the transmission of vibrations into the building.

⚠WARNING

Risk of Roof Collapsing!

Confirm with a structural engineer that the roof structure is strong enough to support the combined weight of the roof curb and the unit. Refer to Table 1, p. 23 for typical unit and curb weights. Failure to ensure proper structural roof support could cause the roof to collapse, which could result in death or serious injury and property damage.

For rooftop applications, ensure the roof is strong enough to support the combined unit and support structural weight. Refer to Table 1, p. 23 for the unit operating weights. If anchoring is required, anchor the unit to the roof with hold-down bolts or isolators.

Check with a roofing contractor for proper waterproofing procedures.

Ductwork

Figure 16, p. 25 to Figure 18, p. 25 illustrate the supply and return air openings as viewed from the rear of the unit.

Figure 16. 3-5 ton standard efficiency units & 3 ton high efficiency units - Horizontal supply & return air openings

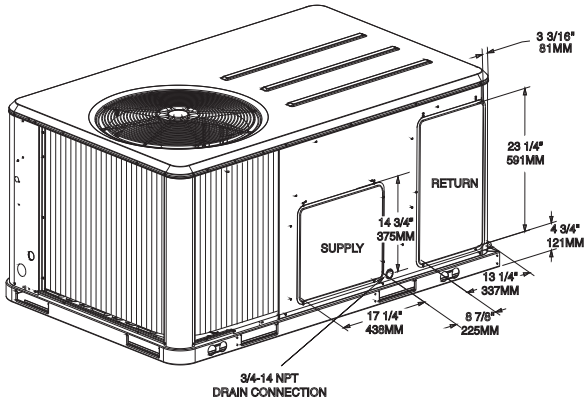

Figure 17. 4-6 ton high efficiency units, 7½-8½ (Microchannel) high efficiency unit and 6-10 ton standard efficiency units - horizontal supply & return air openings

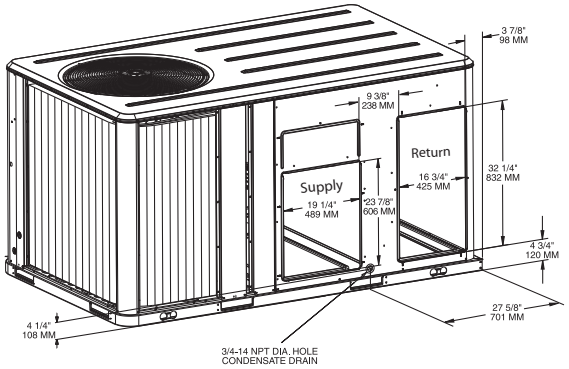

Figure 18. 10 ton high efficiency unit - horizontal supply & return air openings

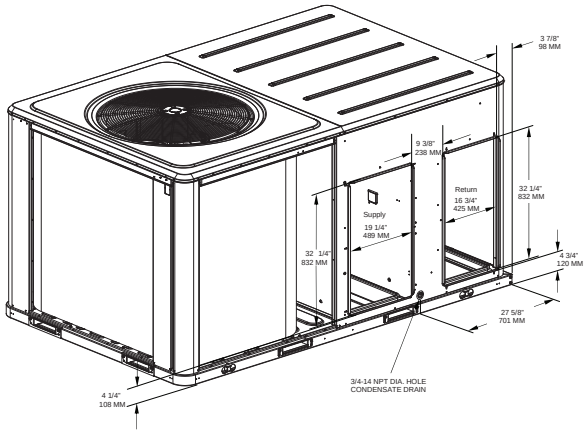

Figure 19, p. 25 to Figure 21, p. 26 illustrate the supply and return air openings in a downflow configuration.

Elbows with turning vanes or splitters are recommended to minimize air noise due to turbulence and to reduce static pressure.

When attaching the ductwork to the unit, provide a water tight flexible connector at the unit to prevent operating sounds from transmitting through the ductwork.

All outdoor ductwork between the unit and the structure should be weather proofed after installation is completed.

Figure 19. 3-5 ton standard efficiency units & 3 ton high efficiency units - Down flow supply & return air openings w/ through-the-base utilities

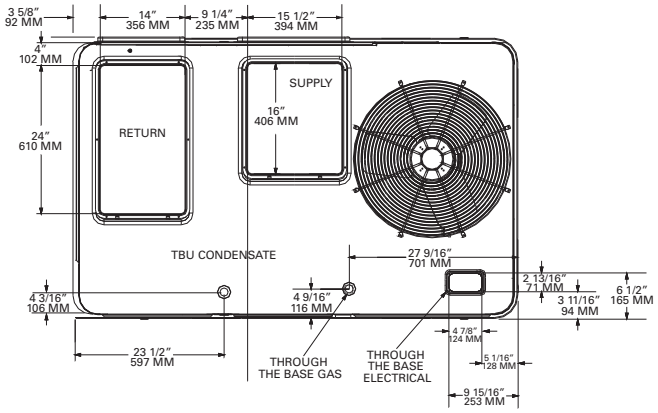

Figure 20. 4-6 ton high efficiency units, 7½-8½ (Microchannel) high efficiency units and 6-10 ton standard efficiency units - down flow supply & return air openings w/ through-the-base utilities

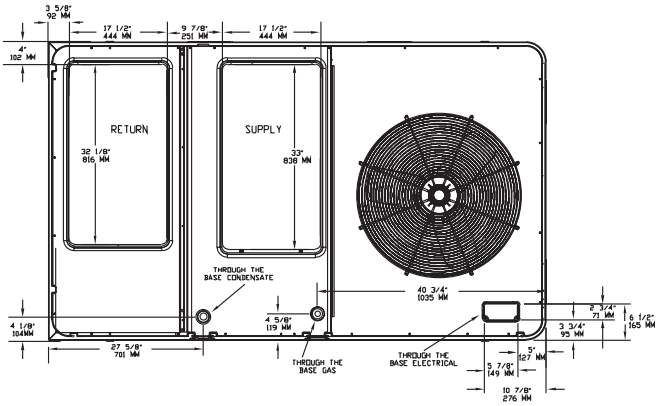

Figure 21. 10 ton high efficiency unit - downflow supply & return air openings w/ through-the-base utilities

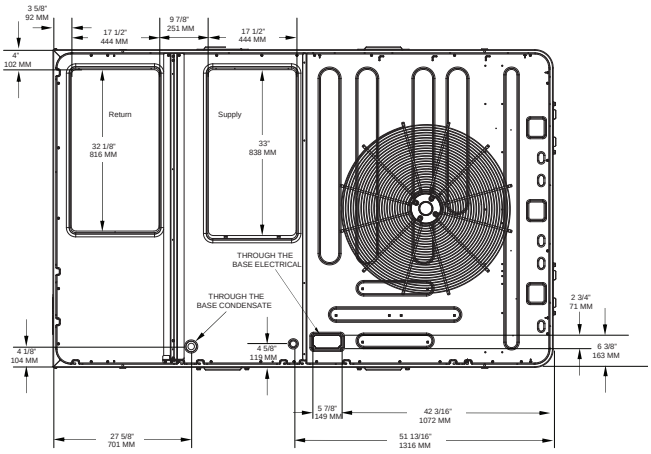

Roof Curb

Downflow

The roof curbs for these units consists of a "full perimeter" enclosure to support the unit just inside of the unit base rail.The 10 ton high efficiency units contain a support base alignment rail and will extend past the end of the roof curb as shown in figures below.

Before installing any roof curb, verify;

- It is the correct curb for the unit,
- It includes the necessary gaskets and hardware,
- The installation location provides the required clearance for proper operation,
- The curb is level and square.The top surface of the curb must be true to assure an adequate curb-to-unit seal.

⚠WARNING

Combustible Materials!

Maintain proper clearance between the unit heat exchanger, vent surfaces and combustible materials. Refer to unit nameplate and installation instructions for proper clearances. Improper clearances could result in combustible materials catching on fire. Failure to maintain proper clearances could result in death or serious injury or property damage.

Verify that appropriate materials were used in the construction of roof and ductwork. Combustible materials should not be used in the construction of ductwork or roof curb that is in close proximity to heater elements or any hot surface. Any combustible material on the inside of the unit base should be removed and replaced with appropriate material.

Step-by-step curb assembly and installation instructions ship with each accessory roof curb kit. Follow the instructions carefully to assure proper fit-up when the unit is set into place.

Note: *To assure proper condensate flow during operation, as well as proper operation of the condensate overflow switch (if equipped), the unit and curb must be level.*

If the unit is elevated, a field constructed catwalk around the unit is strongly recommended to provide easy access for unit maintenance and service.

Recommendations for installing the Supply Air and Return Air ductwork joining the roof curb are included in the curb instruction booklet. Curb ductwork must be fabricated and installed by the installing contractor before the unit is set into place.

Note: *For sound consideration, cut only the holes in the roof deck for the ductwork penetrations. Do not cut out the entire roof deck within the curb perimeter.*

Figure 22. View for base to roof curb alignment YHC120E on 50" x 84" roof curb

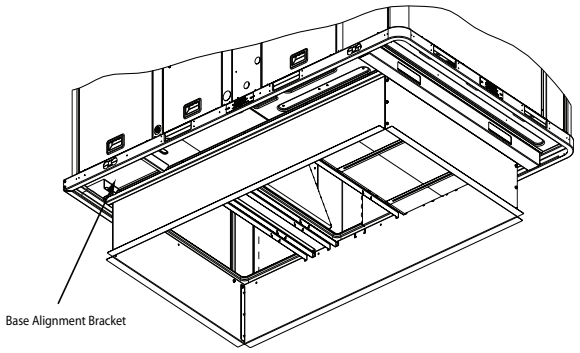

Figure 23. View for base to roof curb alignment YHC120E on 60" x 84" roof curb

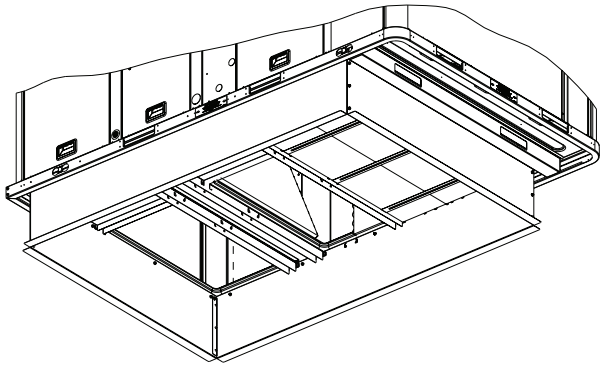

If a Curb Accessory Kit is not used:

- The ductwork can be attached directly to the factory-provided flanges around the unit's supply and return air openings. Be sure to use flexible duct connections at the unit.

- For "built-up" curbs supplied by others, gaskets must be installed around the curb perimeter flange and the supply and return air opening flanges.

Rigging

⚠WARNING

Heavy Objects!

Ensure that all the lifting equipment used is properly rated for the weight of the unit being lifted. Each of the cables (chains or slings), hooks, and shackles used to lift the unit must be capable of supporting the entire weight of the unit. Lifting cables (chains or slings) may not be of the same length. Adjust as necessary for even unit lift. Other lifting arrangements could cause equipment or property damage. Failure to follow instructions above or properly lift unit could result in unit dropping and possibly crushing operator/ technician which could result in death or serious injury.

A Rigging illustration and Center-of-Gravity dimensional data table is shown in Figure 15, p. 23. Refer to the typical unit operating weights table before proceeding.

1. Remove all drill screws fastening wood protection to metal base rail. Remove all screws securing wooden protection to wooden top crate.
2. Remove Wooden Top Crate.

⚠WARNING

Improper Unit Lift!

Test lift unit approximately 24 inches to verify proper center of gravity lift point. To avoid dropping of unit, reposition lifting point if unit is not level. Failure to properly lift unit could result in unit dropping and possibly crushing operator/technician which could result in death or serious injury and possible equipment or property-only damage.

3. Rig the unit as shown in Figure 15, p. 23. Attach adequate strength lifting slings to all four lifting brackets in the unit base rail. Do not use cables, chains, or slings except as shown.
4. Install a lifting bar, as shown in Figure 15, p. 23, to protect the unit and to facilitate a uniform lift. The minimum distance between the lifting hook and the top of the unit should be 7 feet.
5. Test-lift the unit to ensure it is properly rigged and balanced, make any necessary rigging adjustments.

Figure 24. Fork pockets - all units except 10 ton high efficiency units

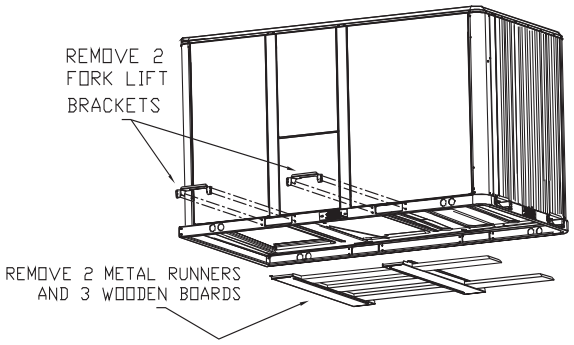

Figure 25. Fork pockets - 10 ton high efficiency unit

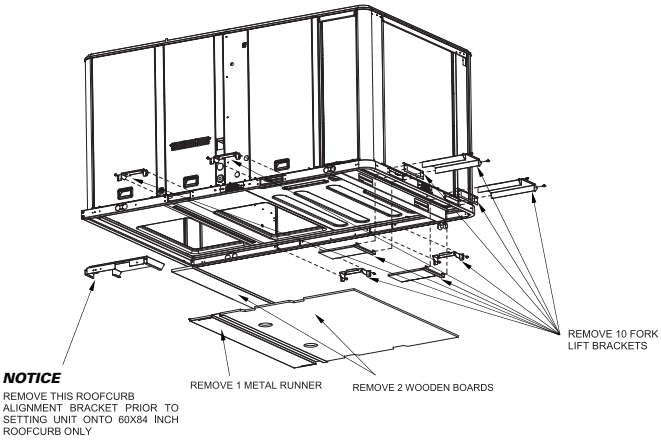

6. Lift the unit enough to allow the removal of base fork pocket protection components as shown in the following figures.
7. When 10 ton high efficiency units are installed on smaller existing roof curb (50"x 84") for replacement applications, do not remove alignment bracket. This bracket helps assure proper alignment of duct openings.
8. Downflow units; align the base rail of the unit with the curb rail while lowering the unit onto the curb. Make sure that the gasket on the curb is not damaged while positioning the unit.

General Unit Requirements

The checklist listed below is a summary of the steps required to successfully install a commercial unit. This checklist is intended to acquaint the installing personnel with what is required in the installation process. It does not replace the detailed instructions called out in the applicable sections of this manual.

- Check the unit for shipping damage and material shortage; file a freight claim and notify appropriate sales representative.

- Verify correct model, options and voltage from unit nameplate.
- Verify that the installation location of the unit will provide the required clearance for proper operation.
- Assemble and install the roof curb (if applicable). Refer to the latest edition of the curb installers guide that ships with each curb kit.
- Fabricate and install ductwork; secure ductwork to curb.
- Install pitch pocket for power supply through building roof. (If applicable)
- Rigging the unit.
- Set the unit onto the curb; check for levelness.
- Ensure unit-to-curb seal is tight and without buckles or cracks.
- Install and connect a condensate drain line to the evaporator drain connection.

Note: *Condensate Overflow Switch (if equipped) will not work if unit is not leveled properly.*

Factory Installed Economizer

- Ensure the economizer has been pulled out into the operating position. Refer to the economizer installation guide for proper position and setup.
- Install all access panels.

Temperature Limit Switch Usage for Gas Heat Units

Units are factory shipped in the down flow discharge configuration but can be field converted to a horizontal discharge configuration. Some, but not all units require a different TCO1 limit switch, which is attached to the combustion blower motor if horizontal discharge configuration is used.

Note: *See Table 3, p. 28 for horizontal discharge requirements.*

If any of the units in Table 3, p. 28 are installed in the down flow discharge configuration and have the alternate TCO1 limit switch provided, remove the additional TCO1 limit switch from the combustion blower motor and discard.

BD= Belt drive ID motor

DD= Direct drive ID motor

Table 3. TC01 tripping values

Unit Model - Standard Efficiency	TCO1 Tripping Values - Downflow / Horizontal	Unit Model - High Efficiency 15 SEER	TCO1 Tripping Values - Downflow / Horizontal	Unit Model - High Efficiency 17 Plus	TCO1 Tripping Values - Downflow / Horizontal
YSC036E**(L,X)-DD	180F	YHC036E**(L,X)-DD	180F	YHC037**(L,X)	190F
YSC036E**(L,X)-BD	170F	YHC036E**(L,X)-BD	170F	YHC037**(M,Y)	170F / 220F
YSC036E**(M,Y)-DD	170F / 190F	YHC036E1*(M,Y)-DD YHC036E(3,4,W)*(M,Y)-DD	190F 170F / 190F	YHC037**(H,Z)	220F
YSC036E**(M,Y)-BD	180F / 190F	YHC036E**(M,Y)-BD	180F / 190F	YHC047**(L,X)	145F / 155F
YSC036E**(H,Z)-DD	170F / 190F	YHC036E1*(H,Z)-DD YHC036E(3,4,W)*(H,Z)-DD	190F / 220F 170F / 190F	YHC047**(M,Y)	170F
YSC036E**(H,Z)-BD	155F / 190F	YHC036E**(H,Z)-BD	155F / 190F	YHC047**(H,Z)	220F
YSC048E**(L,X)-DD	180F	YHC048F1*(L,X)-DD YHC048E/F(3,4,W)*(L,X)-DD	170F / 155F 145F / 155F	YHC067**(L,X)	140F
YSC048E**(L,X)-BD	170F	YHC048E/F**(L,X)-BD	155F	YHC067**(M,Y)	170F
YSC048E**(H,Z)-DD	155F / 210F	YHC048F1*(M,Y)-DD YHC048E/F(3,4,W)*(M,Y)-DD	140F 150F / 170F	YHC067**(H,Z)	170F
YSC048E**(M,Y)-BD	170F / 190F	YHC048E/F**(M,Y)-BD	170F / 180F		
YSC048E**(M,Y)-DD	180F	YHC048F1*(H,Z)-DD YHC048E/F(3,4,W)*(H,Z)-DD	180F / 200F 220F		
YSC048E**(H,Z)-BD	155F / 200F	YHC048E/F**(H,Z)-BD	220F / 260F		
YSC060E**(L, X)	170	YHC060F1*(L,X)-DD YHC060E/F(3,4,W)*(L,X)-DD	155F 140F		
YSC060E**(M,Y)	170F	YHC060E/F**(L,X)-BD	155F / 145F		
YSC060E**(H,Z)-DD	170F / 200F	YHC060F1*(M,Y)-DD YHC060E/F(3,4,W)*(M,Y)-DD	140F / 150F 145F / 170F		
YSC060E**(H,Z)-BD	170F	YHC060E/F**(M,Y)-BD	170F		
YSC072F**(M,Y)	155F	YHC060F1*(H,Z)-DD YHC060E/F(3,4,W)*(H,Z)-DD	180F 190F / 220F		
YSC072F**(L,X)	170F	YHC060E/F**(H,Z)-BD	220F / 230F		

continued on next page

Table 3. TC01 tripping values (continued)

Unit Model - Standard Efficiency	TCO1 Tripping Values - Downflow / Horizontal	Unit Model - High Efficiency 15 SEER	TCO1 Tripping Values - Downflow / Horizontal	Unit Model - High Efficiency 17 Plus	TCO1 Tripping Values - Downflow / Horizontal
YSC072F**(H,Z)	145F / 155F	YHC072E/F**(L,X)	200F		
YSC090F**(L,X)	180F / 200F	YHC072E/F**(M,Y)	190F		
YSC090F**(M,Y)	155F	YHC072E/F**(H,Z)	210F		
YSC090F**(H,Z)	155F	YHC092F**(L,X)	190F		
YSC092F**(L,X)	225F	YHC092F**(M,Y)	180F / 200F		
YSC092F**(M,Y)	230F	YHC092F**(H,Z)	200F		
YSC092F**(H,Z)	220F /260F	YHC102F**(L,X)	190F		
YSC102F**(L,X)	225F	YHC102F**(M,Y)	180/200F		
YSC102F**(M,Y)	230F	YHC102F**(H,Z)	200F		
YSC102F**(H,Z)	200F / 260F	YHC120E**(L,X)	135F		
YSC120F**(L,X)	180F / 200F	YHC120E**(M,Y)	170F		
YSC120F**(M,Y)	200F	YHC120E**(H,Z)	145F / 190F		
YSC120F**(H,Z)	190F / 260F				

Horizontal Discharge Conversion (3 to 5 Ton Units)

Note: *3 to 5 ton units supply cover to supply opening and return cover to return opening.*

Supplies needed by installer for conversion: 3 oz. tube of high temperature RTV sealant. (500°F / 260°C: similar to Dow Corning 736)

Important: *Failure to use recommended sealant could result in unit performance loss.*

If a unit is to be converted to a horizontal discharge, the following conversion must be performed:

1. Remove RETURN and SUPPLY duct covers.
2. Locate supply cover. Apply ¼ in. (6mm.) continuous bead of 500°F RTV sealant to the flange as shown.

Figure 26. Duct cover

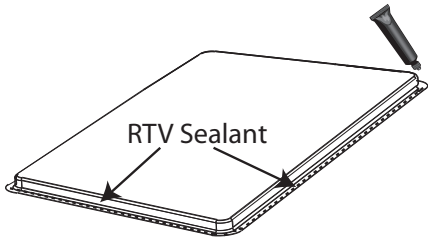

3. Position duct cover as shown, rotate 90 degrees to allow entrance into supply opening.
4. Slide duct covers into duct openings until inward edge of duct cover engages with the 2 retaining clips on the duct flanges. Secure the outward edge of each duct cover with 2 screws.
5. Slide RETURN DUCT COVER (insulation side up) into supply opening until inward edge of duct cover engages with the 2 retaining clips on the duct flange. Secure outward edge of the duct cover with two screws.
6. After completing installation of the duct covers for horizontal discharge, proceed to TCO-1 instructions.

TCO-1 Instructions

If the unit being installed is listed in Table 3, p. 28 with a different TCO1 value, the limit control TCO1 must be replaced with the extra limit control shipped in the heater compartment. Replace TCO1 following the instructions in steps 1 through 3 below. If the unit being installed does not correspond to any in the following list, skip steps 1 through 3 and go on to next step in the installation process.

Figure 27. TCO1 location (YSC036E-YSC060E, YHC036E, YHC037E)

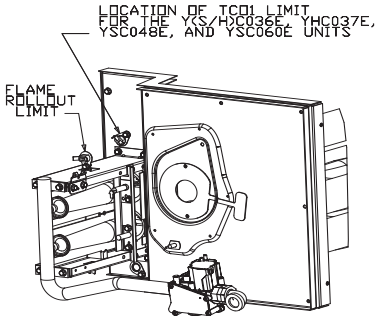

⚠WARNING

Hazardous Voltage!

Disconnect all electric power, including remote disconnects before servicing. Follow proper lockout/ tagout procedures to ensure the power can not be inadvertently energized. Failure to disconnect power before servicing could result in death or serious injury.

1. Remove the heat section access panel.
2. Remove TCO1 from shipping location, attached to the combustion blower.
3. Replace and discard the existing TCO1 originally installed at the factory for down flow operation with the TCO1 shipped attached to the combustion blower for horizontal operation.
4. Replace heat section access panel.

Horizontal Discharge Conversion (6 to 10 Ton Units)

Note: *6 to 10 ton units the supply cover to return opening & return cover to supply opening.*

Supplies Needed by Installer for Conversion: 3 oz. tube of high Temperature RTV sealant (500°F / 260°C: Similar to Dow Corning 736).

Important: *Failure to use recommended sealant could result in unit performance loss.*

If a unit is to be converted to a Horizontal discharge, the following conversion must be performed:

1. Remove RETURN and SUPPLY duct covers.
2. Place SUPPLY DUCT COVER over down-flow return opening. (insulation side down)
3. Using self-drilling screws, (or screws removed from duct cover), screw through dimples to attach DUCT COVER to base.

Figure 28. Duct cover

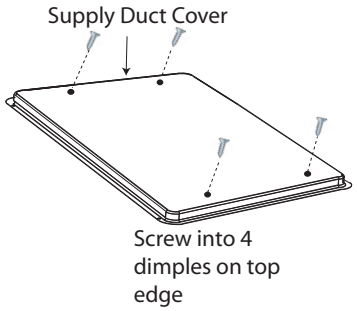

4. On original RETURN DUCT COVER, apply ¼"(6mm.) continuous bead of 500°F RTV sealant around flange (opposite insulation side), as shown.

Figure 29. Duct cover

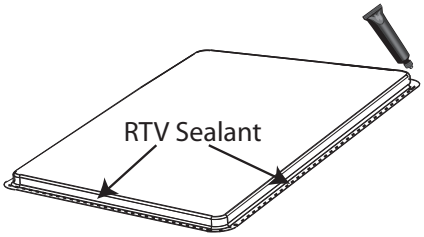

5. Slide RETURN DUCT COVER (insulation side up) into supply opening until inward edge of duct cover engages with the 2 retaining clips on the duct flange. Secure outward edge of the duct cover with two screws.

Note: *If unit is equipped with Return Air Smoke Detector, refer to field conversion instructions for horizontal discharge before installing return air duct.*

Note: *If unit is equipped with Discharge Air Sensing option refer to the following figure for proper tube positioning based on unit tonnage.*

Figure 30. For YSC120F*R and YHC092F, 102F models

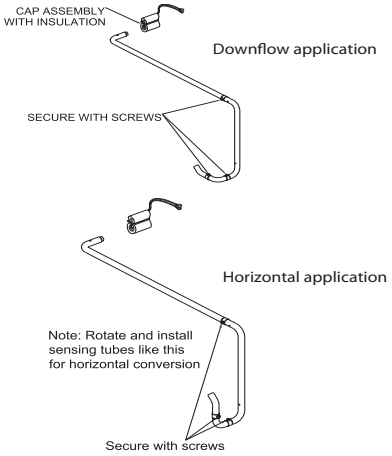

6. After completing installation of the duct covers for horizontal discharge, proceed to TCO-1 instructions.

Figure 31. Supply and return covers

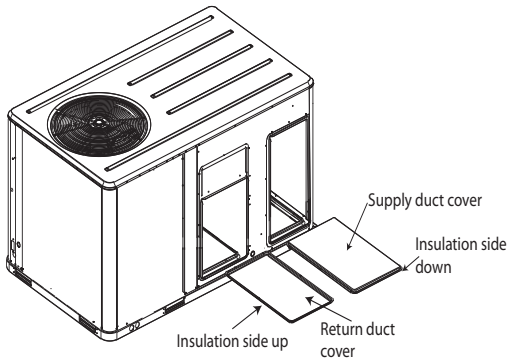

TCO1 Instructions

If the unit being installed is listed in the following list, the limit control TCO1 must be replaced with the extra limit control shipped in the heater compartment. Replace TCO1 following the instructions in steps 1 through 3 below. If the unit being installed does not correspond to any in the following list, skip steps1 through 3 and go on to next step in the installation process.

Unit Model Number

YSC072F**(H,Z), YSC092F**(M,Y), YSC092F**(H,Z), YSC102F**(M,Y), YSC102F**(H,Z), YSC120F**(L,X), YSC120F**(H,Z), YSC090F**(L,X), YHC092F(M,Y), YHC102F**(M,Y), YHC120E**(L,X), YHC120E**(H,Z).

⚠WARNING

Hazardous Voltage!

Disconnect all electric power, including remote disconnects before servicing. Follow proper lockout/ tagout procedures to ensure the power can not be inadvertently energized. Failure to disconnect power before servicing could result in death or serious injury.

1. Remove the heat section access panel.
2. Remove TCO1 from shipping location, attached to the combustion blower.
3. Replace and discard the existing TCO1 originally installed at the factory for down flow operation with the TCO1 shipped attached to the combustion blower for horizontal operation.
4. Replace heat section access panel.

Figure 32. TCO1 location (YHC120E)

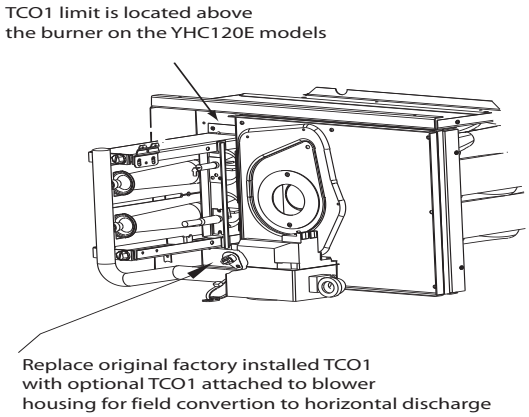

Return Air Smoke Detector

The factory installed Return Air Smoke Detector is installed in the downflow discharge position. No additional field setup is required.

If a unit is to be converted to horizontal discharge, the following conversion must be performed:

1. If the unit has an economizer, it must be pulled out in the operating position.
2. Remove the 3 screws from the mounting brackets. Refer to downflow view for screws locations.

Figure 33. Downflow view

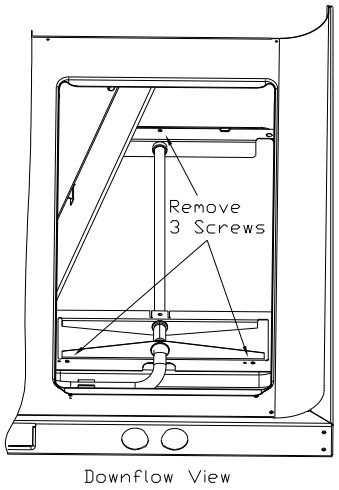

3. Lift the tube and bracket from the downflow duct opening. Rotate the tube and bracket assembly 180 degrees ensuring that the holes on the copper sensing tube face away from the unit and face the return air ductwork. Refer Figure 34, p. 31 and Figure 35, p. 32 for screws location.

Figure 34. Horizontal view 1

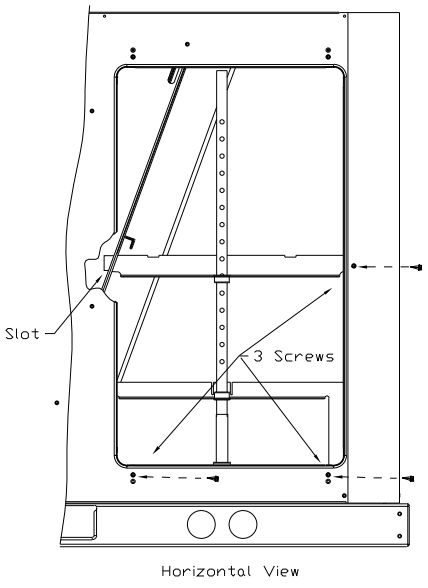

Figure 35. Horizontal view 2

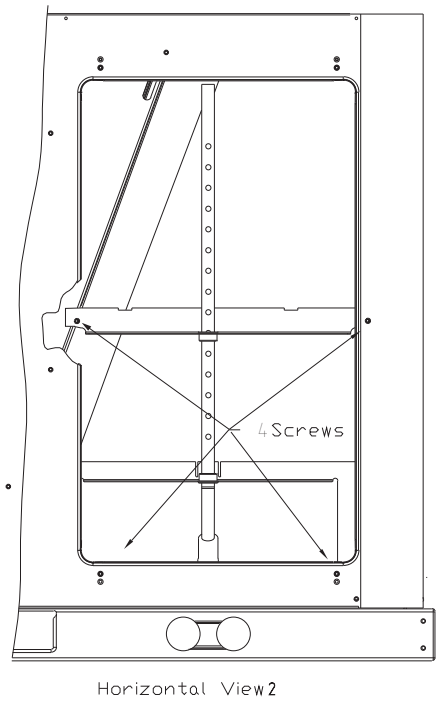

Note: *Check to insure that the flexible tubing lies flat on the base pan surface.*

4. Slide the top bracket down the copper sensing tube. For YSC036E-060E, and YHC036-037E units insert the tab on the left side into the slot on the indoor coil block off and secure the right side of the bracket with one of the 3 screws removed in step 2. Refer to Figure 34, p. 31. For YHC047E-067E, YHC048E/F-060E/F, YSC072F-120F, YHC120E and YHC072F-102F units secure the tab on left side to the indoor coil block off with one of the screws removed in step 2 and secure the right side of the bracket with one of the screws removed from the access panel. Refer to Figure 35, p. 32.
5. Using the remaining 2 screws removed in step 2, secure the bottom bracket. Refer to Figure 34, p. 31.

Note: *Larger diameter holes on bottom bracket line up with the dimples on the rear panel. The smaller diameter holes line up with the screw holes in the rear panel.*

Main Electrical Power Requirements

⚠WARNING

Hazardous Voltage w/Capacitors!

Disconnect all electric power, including remote disconnects and discharge all motor start/run capacitors before servicing. Follow proper lockout/tagout procedures to ensure the power cannot be inadvertently energized. Verify with an appropriate voltmeter that all capacitors have discharged. Failure to disconnect power and discharge capacitors before servicing could result in death or serious injury.

For additional information regarding the safe discharge of capacitors, see PROD-SVB06A-EN

⚠WARNING

Proper Field Wiring and Grounding Required!

All field wiring MUST be performed by qualified personnel. Improperly installed and grounded field wiring poses FIRE and ELECTROCUTION hazards. To avoid these hazards, you MUST follow requirements for field wiring installation and grounding as described in NEC and your local/state electrical codes. Failure to follow code could result in death or serious injury.

Verify that the power supply complies with the unit nameplate specifications.

- Inspect all control panel components; tighten any loose connections.
- Connect properly sized and protected power supply wiring to a field-supplied/installed disconnect switch and to the main power terminal block (HTB1) in the unit control panel.
- Install proper grounding wires to an earth ground.

Through-the-Base Gas Installation

The gas supply line must extend 4⅝" above the base pan. The "Through-the-Base Gas" kit is located in the Heat Vestibule compartment. To gain access to the kit, remove the Heat Compartment access panel.

1. Remove the pipe assembly strapped to the manifold. Unscrew 90° elbow from 6½" nipple and slide rubber grommet off of nipple.
2. Remove the plastic plug from the hole in the center post and insert the grommet removed from 6½" pipe nipple.

3. Using pipe sealant, attach the 90° elbow to the gas supply line.
4. Disconnect the 5" pipe nipple and union from the “Through-the-Base Gas” kit assembly.
5. Using pipe sealant, attach the 6½” nipple and gas shutoff assembly to the 90° elbow on the gas supply line.
6. Using pipe sealant, attach the 5" pipe nipple and union to the street el attached to the gas valve.
7. Connect 5" pipe nipple and union to 6½” nipple and gas shutoff assembly.

Figure 36. Typical through-the-base gas installation

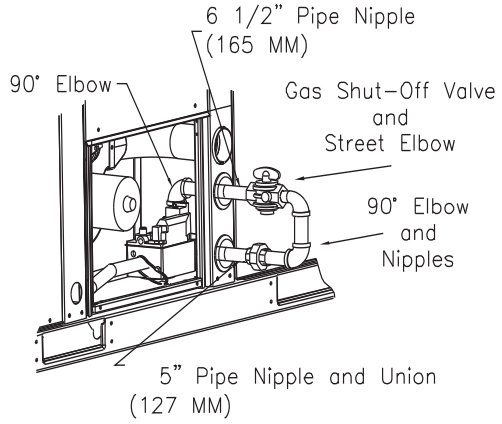

Requirements for Gas Heat

Note: *The unit gas train and Optional Through-the-Base Gas Shut-Off Valve are rated at 1/2 PSIG maximum. A pressure reducing regulator is recommended to prevent this maximum from being exceeded. These components must be isolated during field gas piping test that exceed 1/2 PSIG. It is recommended that the field piping be capped prior to the unit gas train or Optional Through-the-Base Gas Shut-Off Valve if present.*

- Gas supply line properly sized and connected to the unit gas train.
- All gas piping joints properly sealed.
- Gas piping leak checked with a soap solution. If piping connections to the unit are complete, do not pressurize piping in excess of 0.50 psig or 14" W.C. to prevent component failure.
- Drip leg Installed in the gas piping near the unit.
- Minimum gas supply pressure should be 4.5" W.C.
- Maximum gas supply pressure must not exceed 14.0" W.C.
- Manifold pressure for single stage heaters should be set to 3.3" W.C.
- Manifold pressure for two stage heaters should be set to 3.5" W.C. on HIGH FIRE and 1.8" W.C. on LOW FIRE.
- Flue Exhaust clear of any obstruction.

Condensate Drain Configuration

⚠WARNING

Hazardous Voltage!

Disconnect all electric power, including remote disconnects before servicing. Follow proper lockout/ tagout procedures to ensure the power can not be inadvertently energized. Failure to disconnect power before servicing could result in death or serious injury.

An evaporator condensate drain connection is provided on each unit. Refer to Figure 16, p. 25 and Figure 17, p. 25 for the appropriate drain location.

The condensate drain pan is factory installed to drain condensate to the back side of the unit. See Figure 16, p. 25 and Figure 17, p. 25. It can be converted to drain condensate out the front side of the unit or through-the-base.

To convert drain condensate out the front of unit:

1. Remove evaporator access panel and supply air access panels.
2. Remove the support panel that the condensate drain pan exits through.
3. Slide the condensate drain pan out of the unit and rotate 180°.
4. Slide the condensate drain pan back into the unit, align the drain with the grommeted opening in the rear support panel and push until the coupling is seated in the grommet.
5. Replace the front support panel by aligning the panel with tabs in the raceway. Align the condensate drain pan support in the grommeted hole as the panel is put in place.
6. Replace evaporator access panel and supply air access panels.

To convert drain condensate through-the base of unit:

1. Remove evaporator access panel and supply air access panels.
2. Remove the support panel that the condensate drain pan exits through.
3. Slide the condensate drain pan out of the unit.
4. Place on a level surface in the position it was removed from the unit.
5. Remove the plug knockout in the bottom of the drain pan to convert it to through-the-base drainage.

6. Plug the original condensate drain opening with a field supplied 3/4" NPT plug.
7. Slide the condensate drain pan back into the unit, align the drain support with the grommeted opening in the rear support panel and push until the support is seated in the grommet.
8. Replace the front support panel by aligning the panel with tabs in the raceway. Align the plugged condensate drain pan coupling in the grommeted hole as the panel is put in place.
9. Replace evaporator access panel and supply air access panels.

A condensate trap must be installed at the unit due to the drain connection being on the "negative pressure" side of the fan. Install the P-Trap using the guidelines in Figure 37, p. 34.

A condensate drain line must be connected to the P-Trap. Pitch the drain lines at least 1/2 inch for every 10 feet of horizontal run to assure proper condensate flow. Do not allow the horizontal run to sag causing a possible double-trap condition which could result in condensate backup due to "air lock".

Figure 37. Condensate trap installation

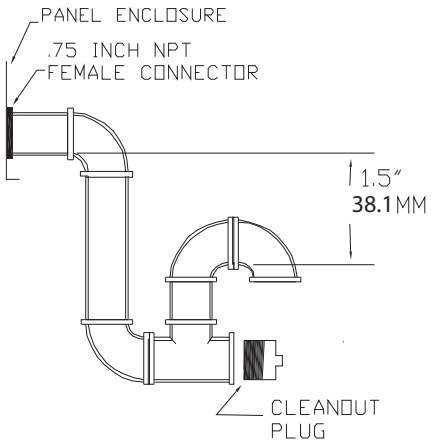

Drain Pan Removal (Units with Condensate Overflow Switch Option)

Before drain pan removal, the switch wire must be disconnected from wire tie on panel and/or any tape before drain pan can be removed.

Care must be taken so the wire does not catch on the bottom of indoor coil or any protrusion.

Note: *When reversing the drain pan, on some units, the condensate overflow switch will need to be moved to the second hole in its bracket to avoid contact with headers or indoor coil.*

Filter Installation

The quantity of filters is determined by unit size. Access to the filters is obtained by removing the filter access panel. Refer to the unit Service Facts (shipped with each unit) for filter requirements.

Note: *Do not operate the unit without filters.*

Field Installed Power Wiring

⚠WARNING

Proper Field Wiring and Grounding Required!

All field wiring MUST be performed by qualified personnel. Improperly installed and grounded field wiring poses FIRE and ELECTROCUTION hazards. To avoid these hazards, you MUST follow requirements for field wiring installation and grounding as described in NEC and your local/state electrical codes. Failure to follow code could result in death or serious injury.

An overall dimensional layout for the field installed wiring entrance into the unit is illustrated in "Unit Dimensions," p. 15. To insure that the unit's supply power wiring is properly sized and installed, follow the following guidelines.

Verify that the power supply available is compatible with the unit's nameplate ratings. The available supply power must be within 10% of the rated voltage stamped on the nameplate. Use only copper conductors to connect the power supply to the unit.

NOTICE:

Use Copper Conductors Only!

Unit terminals are not designed to accept other types of conductors. Failure to use copper conductors could result in equipment damage.

Important: *If the unit is not equipped with an optional factory installed non-fused disconnect switch or circuit breaker, a field supplied disconnect switch must be installed at or near the unit in accordance with the National Electrical Code (NEC latest edition).*

Main Unit Power

⚠WARNING

Proper Field Wiring and Grounding Required!

All field wiring MUST be performed by qualified personnel. Improperly installed and grounded field wiring poses FIRE and ELECTROCUTION hazards. To avoid these hazards, you MUST follow requirements for field wiring installation and grounding as described in NEC and your local/state electrical codes. Failure to follow code could result in death or serious injury.

⚠WARNING

Hazardous Voltage!

Disconnect all electric power, including remote disconnects before servicing. Follow proper lockout/tagout procedures to ensure the power can not be inadvertently energized. Failure to disconnect power before servicing could result in death or serious injury.

Standard Wiring

1. Location of the applicable electrical service entrance is illustrated in "Unit Dimensions," p. 15. Complete the unit's power wiring connections at Compressor Contactor # 1 (CC1) inside the unit control panel. Refer to the customer connection diagram that is shipped with the unit for specific termination points
2. Provide proper grounding for the unit in accordance with local and national codes.

Optional TBUE Wiring (Through-the-Base Electrical Option)

1. Location of the applicable electrical service is illustrated below. Refer to the customer connection diagram that is shipped with the unit for specific termination points. The termination points, depending on the customer option selected would be a factory mounted non-fused disconnect switch (UDC) or circuit breaker (UCB). If neither a factory mounted non-fused disconnect switch (UDC) or circuit breaker (UCB) was factory mounted, field wiring connections should be terminated in the control box at Compressor Contactor # 1 (CC1).
2. Provide proper grounding for the unit in accordance with local and national codes.

Note: *Black Gasket is shipped from the factory and is located in the literature ship-with bag in the control box. Apply Black Gasket around conduit plate on all 4 sides after installation to prevent air leakage from the building entering the electrical enclosures.*

Note: *Seal between wiring and conduit with Black Gasket or weather proof sealer to prevent air leakage from the building entering the electrical enclosures. Also seal around conduit and wiring at all roof and curb penetrations.*

Figure 38. All units except 10 ton high efficiency units

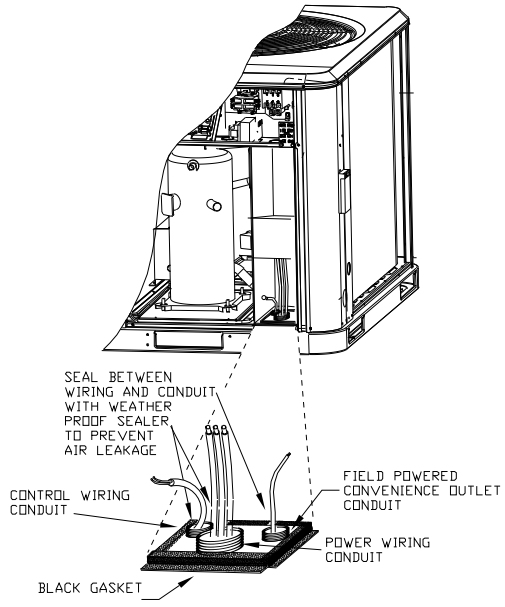

Figure 39. 10 ton high efficiency units

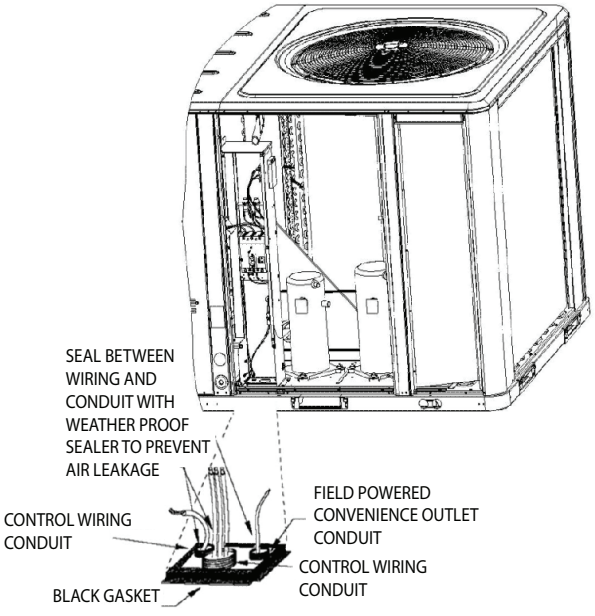

Field-Installed Control Wiring

⚠WARNING

Hazardous Voltage!

Disconnect all electric power, including remote disconnects before servicing. Follow proper lockout/tagout procedures to ensure the power can not be inadvertently energized. Failure to disconnect power before servicing could result in death or serious injury.

⚠WARNING

Proper Field Wiring and Grounding Required!

All field wiring MUST be performed by qualified personnel. Improperly installed and grounded field wiring poses FIRE and ELECTROCUTION hazards. To avoid these hazards, you MUST follow requirements for field wiring installation and grounding as described in NEC and your local/state electrical codes. Failure to follow code could result in death or serious injury.

An overall layout of the various control options available with the required number of conductors for each control device is illustrated in Figure 36, p. 33.

Note: *All field wiring must conform to NEC guidelines as well as state and local codes.*

Control Power Transformer

The 24 volt control power transformers are to be used only with the accessories called out in this manual. Transformers rated greater than 50 VA are equipped with internal circuit breakers. If a circuit breaker trips, turn "Off" all power to the unit before attempting to reset it.

⚠WARNING

Hazardous Voltage!

Disconnect all electric power, including remote disconnects before servicing. Follow proper lockout/tagout procedures to ensure the power can not be inadvertently energized. Failure to disconnect power before servicing could result in death or serious injury.

The transformer is located in the control panel. The circuit breaker is located on the left side of the transformer and can be reset by pressing in on the black reset button.

Controls Using 24 VAC

Before installing any connecting wiring, refer to "Unit Dimensions," p. 15 for the electrical access locations provided on the unit and Table 4, p. 36 or Table 5, p. 36 for AC conductor sizing guidelines, and;

1. Use copper conductors unless otherwise specified.
2. Ensure that the AC control wiring between the controls and the unit's termination point does not exceed three (3) ohms/conductor for the length of the run.

NOTICE:

Controls Using 24 VAC!

Resistance in excess of 3 ohms per conductor could cause component failure due to insufficient AC voltage supply.

Note: *Be sure to check all loads and conductors for grounds, shorts, and mis-wiring.*

3. Do not run the AC low voltage wiring in the same conduit with the high voltage power wiring.
4. Route low voltage wiring per illustrations on page 38.

Table 4. Electromechanical thermostat 24V AC conductors with ReliaTel™

Distance from Unit to Control	Recommended Wire Size
000 - 460 feet	18 gauge
000 - 140 m	.75 mm2
461 - 732 feet	16 gauge
141 - 223 m	1.3 mm2
733 - 1000 feet	14 gauge
224 - 305 m	2.0 mm2

Table 5. Electromechanical thermostat 24V AC conductors with electromechanical unit

Distance from Unit to Control	Recommended Wire Size
0 - 30 feet	22 gauge
0 - 9.1 m	.33 m2
31 - 50 feet	20 gauge
9.5 - 15.2 m	.50m2
51 - 75 feet	18 gauge
15.5 - 22.9 m	.75 m2
76 - 125 feet	16 gauge
23.1 - 38.1 m	1.3 m2
126 - 200 feet	14 gauge
38.4 - 60.9 m	2.0 m2

Controls using DC Analog Input/Outputs (Standard Low Voltage Multi conductor Wire)

Before installing any connecting wiring between the unit and components utilizing a DC analog input\output signal, refer to "Unit Dimensions," p. 15 for the electrical access locations provided on the unit.

- Table 6, p. 37 lists the conductor sizing guidelines that must be followed when interconnecting the DC binary output devices and the system components utilizing a DC analog input/output signal to the unit.

Note: *Resistance in excess of 2.5 ohms per conductor can cause deviations in the accuracy of the controls.*

Note: *Ensure that the wiring between controls and the unit's termination point does not exceed two and a half (2.5) ohms/conductor for the length of the run.*

- Do not run the electrical wires transporting DC signals in or around conduit housing high voltage wires.
- Route low voltage wiring per illustrations on page 38.

DC Conductors

Table 6. Zone sensor module wiring

Distance from Unit to Control	Recommended Wire Size
0 - 150 feet	22 gauge
0 - 45.7 m	.33 mm2
151 - 240 feet	20 gauge
46 - 73.1 m	.50 mm2
241 -385 feet	18 gauge
73.5 - 117.3 m	.75 mm2
386 - 610 feet	16 gauge
117.7 - 185.9 m	1.3 mm2
611 - 970 feet	14 gauge
186.2 - 295.7 m	2.0 mm2

Figure 40. Typical field wiring diagrams for electromechanical

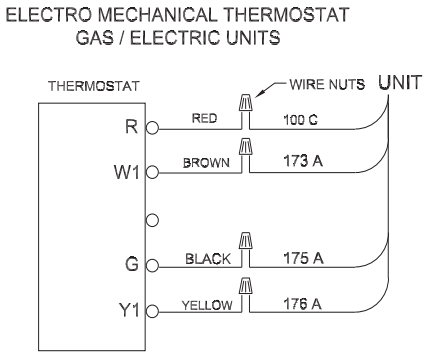

Figure 41. ReliaTel™ conventional thermostat field wiring diagrams[a]

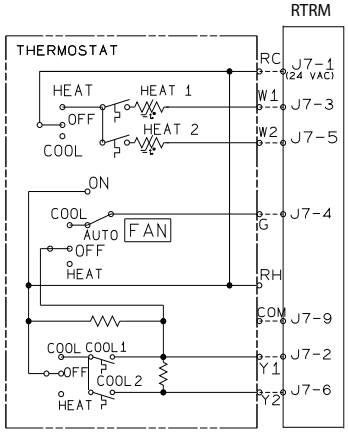

(a) Not compatible with VAV units.

Figure 42. ReliaTel™ options module

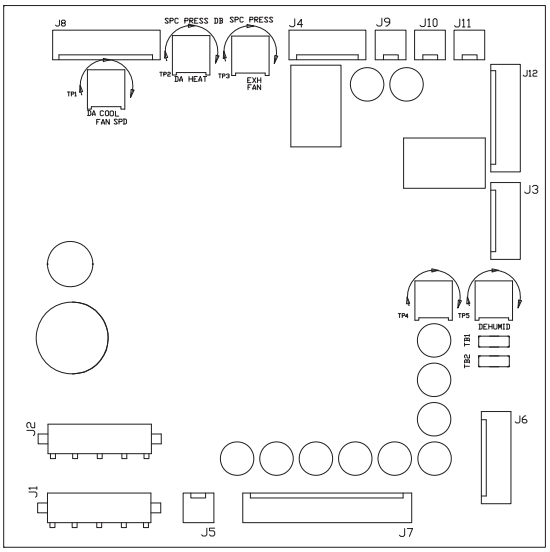

Figure 43. ReliaTel™ relative humidity sensor (dehumidification option)

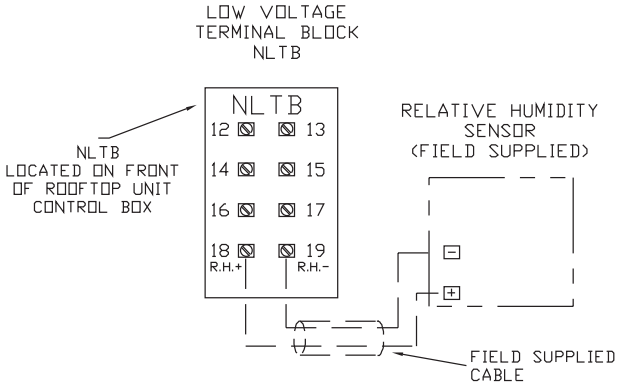

Figure 44. ReliaTel™ humidistat (dehumidification option)

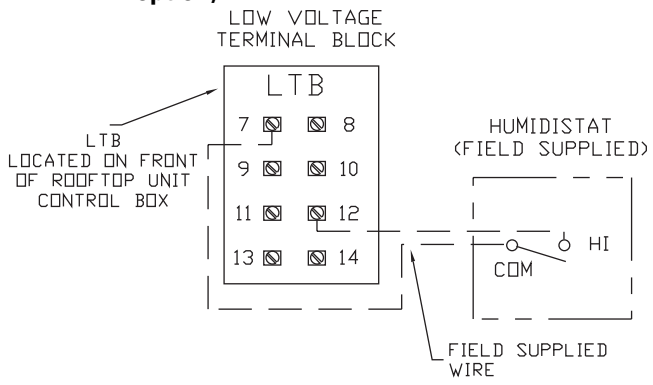

Figure 45. Electromechanical control customer low voltage routing (all units except 10 ton high efficiency)

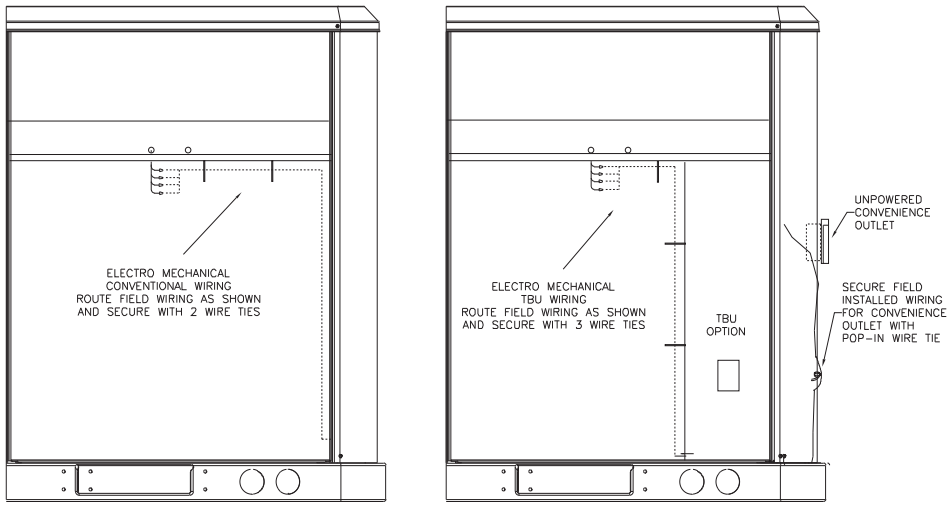

Figure 46. ReliaTel™ control customer low voltage routing (all units except 10 ton high efficiency)

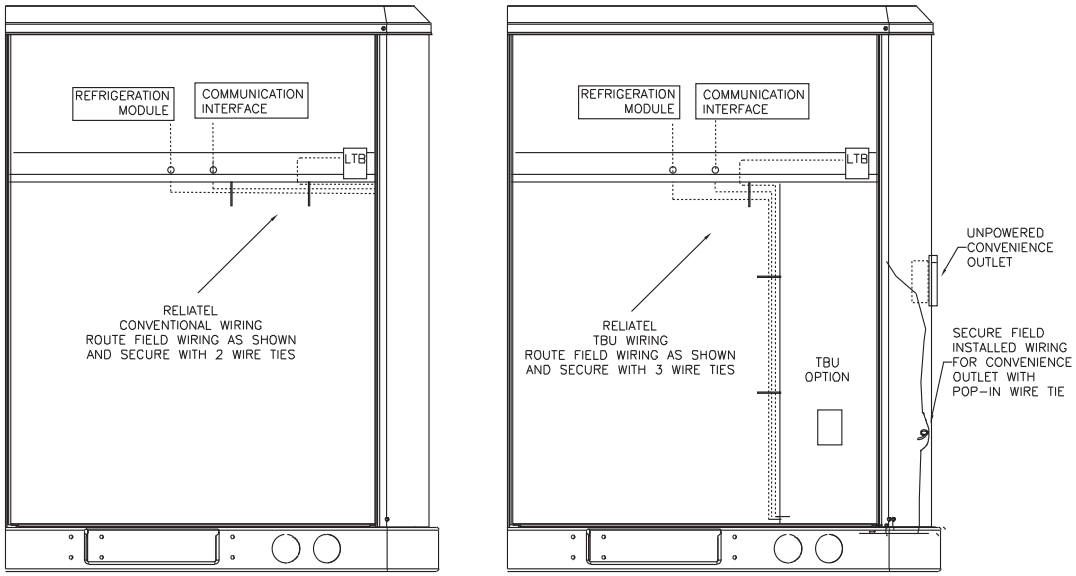

Figure 47. ReliaTel™ (without TBUE) control customer wire routing (10 ton high efficiency)

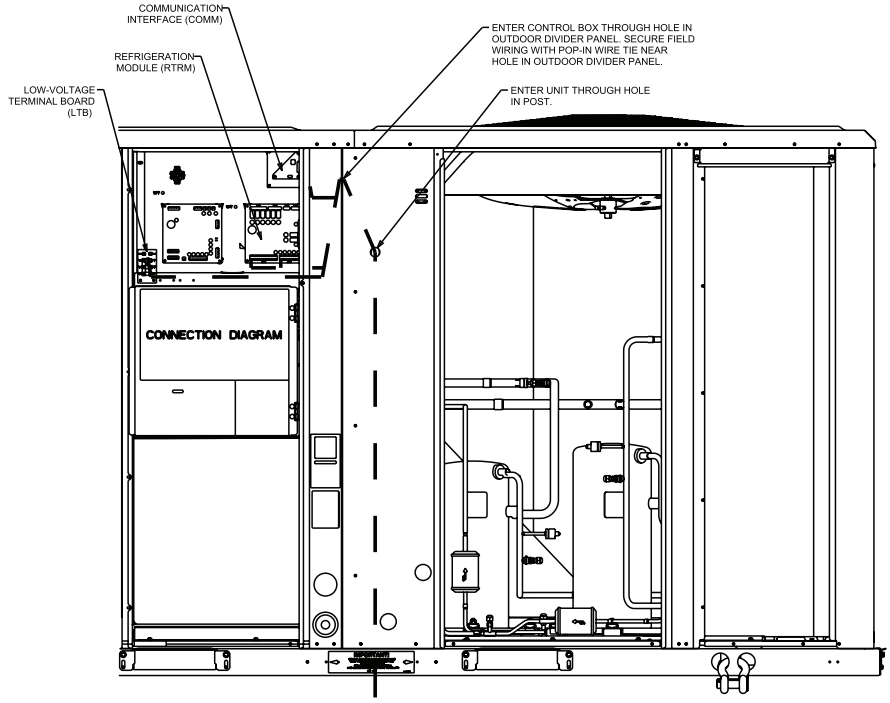

Figure 48. ReliaTel™ (with TBUE) control customer wire routing (10 ton high efficiency)

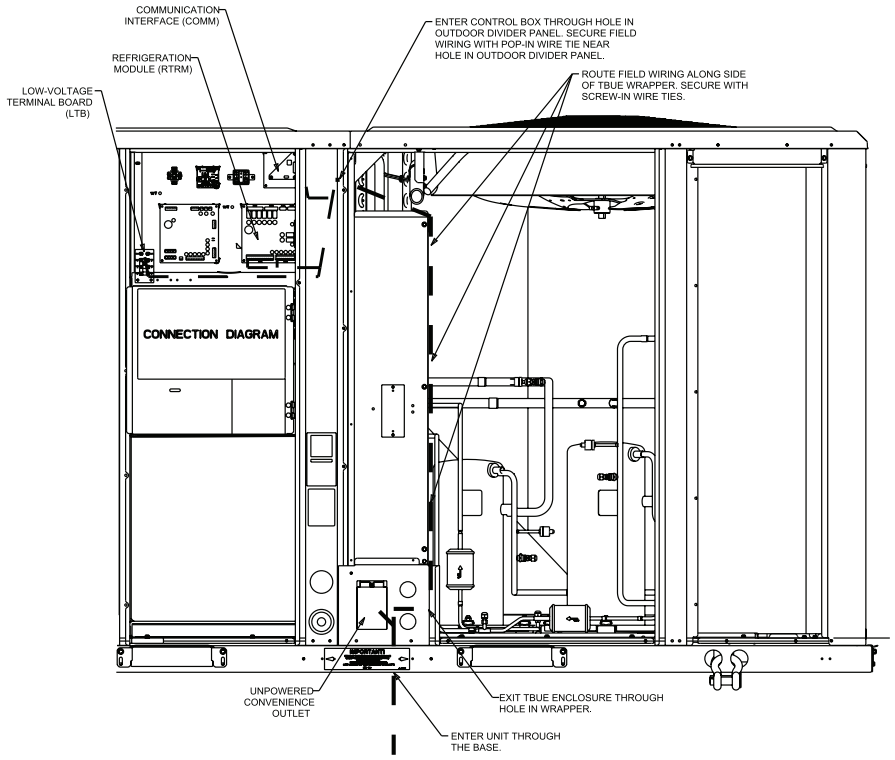

Figure 49. Electromechanical (without TBUE) control customer wire routing (10 ton high efficiency)

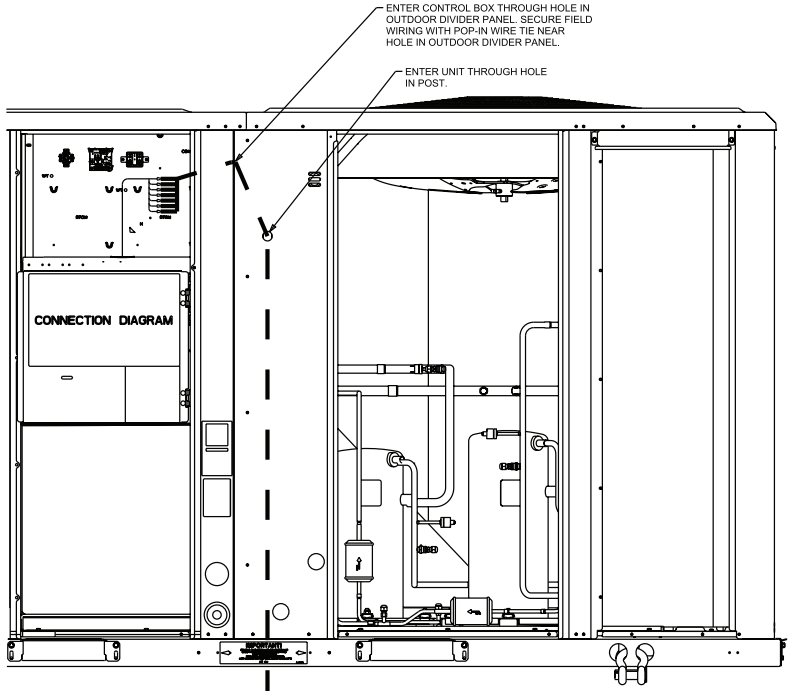

Figure 50. Electromechanical (with TBUE) control customer wire routing (10 ton high efficiency)

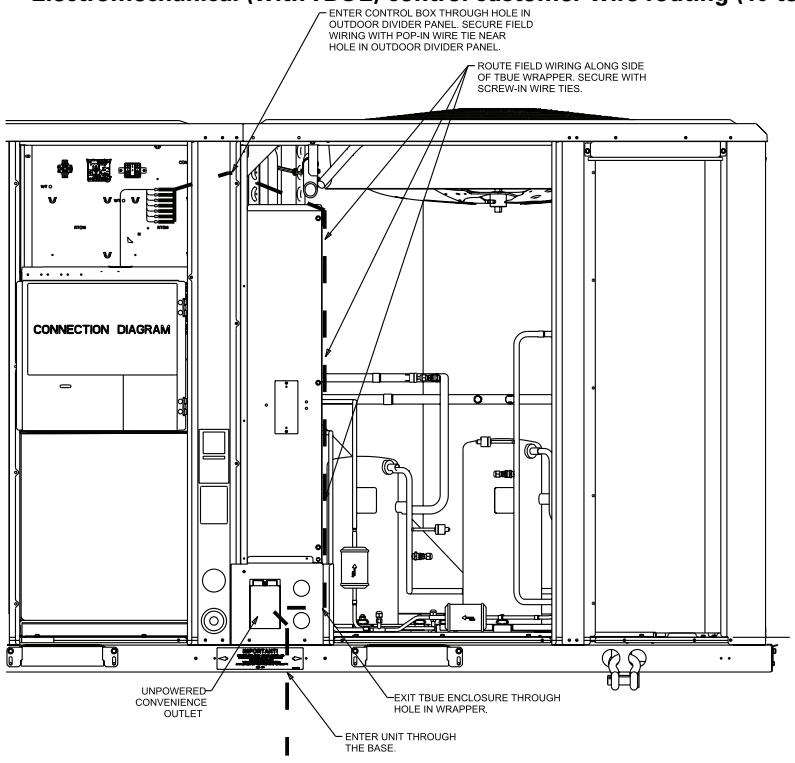

Space Temperature Averaging (ReliaTel™ Only)

Space temperature averaging is accomplished by wiring a number of remote sensors in a series/parallel circuit.

Using the BAYSENS016* or BAYSENS077*, at least four sensors are required to accomplish space temperature averaging. See diagram below.

- Example #1 illustrates two series circuits with two sensors in each circuit wired in parallel. The square of any number of remote sensors is required.
- Example #2 illustrates three sensors squared in a series/parallel circuit. Using BAYSENS077*, two sensors are required to accomplish space temperature averaging.
- Example #3 illustrates the circuit required for this sensor. Table 7, p. 43 lists the temperature versus resistance coefficient for all sensors.

Figure 51. Examples

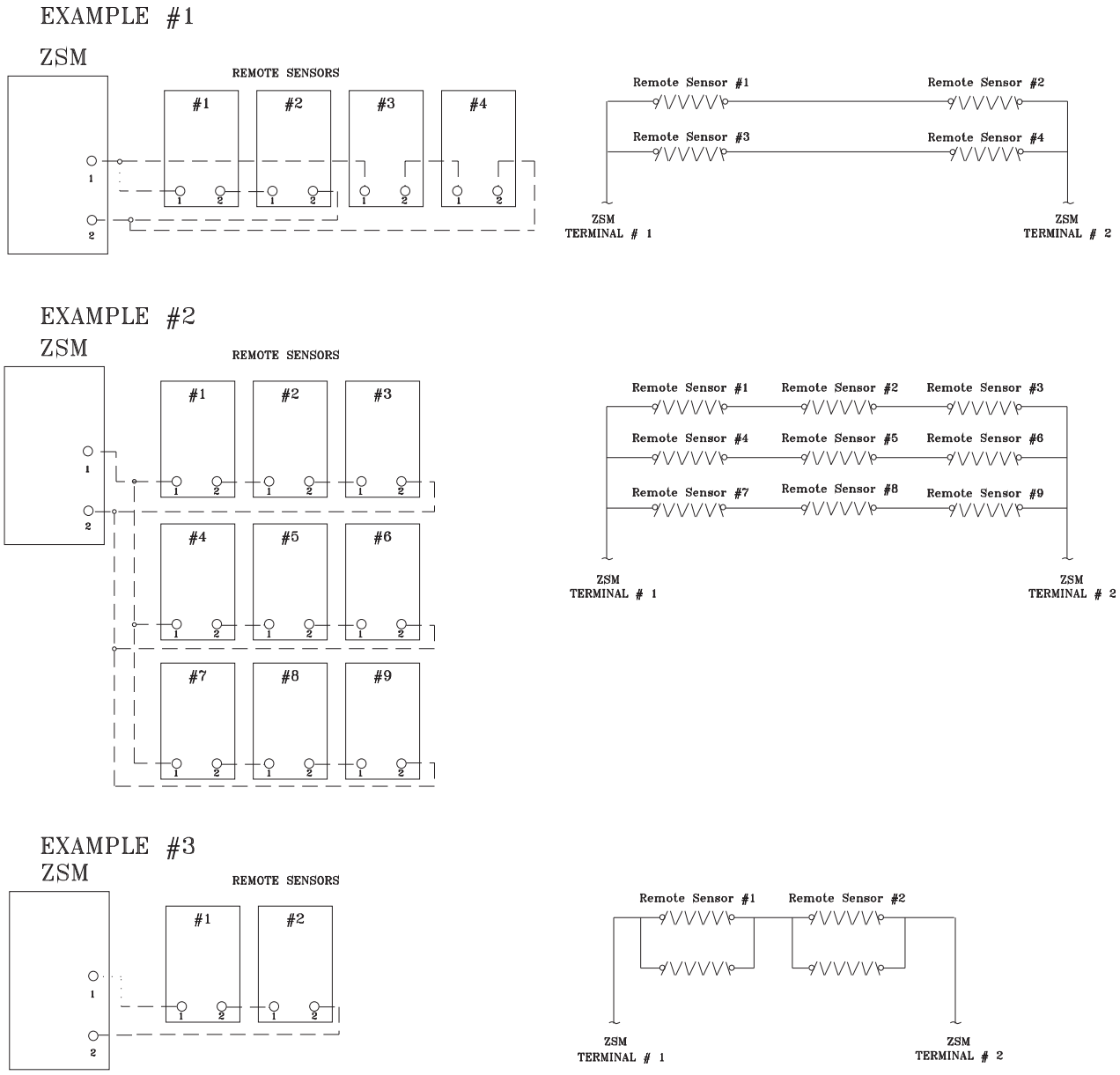

Note: *Wiring pin numbers are for reference only. There are multiple smoke detector systems that could have differently numbered pins. For correct wiring details, please refer to the specific smoke detector literature that accompanied this unit.*

Figure 52. Typical field wiring diagrams for optional controls (ReliaTel™ only)

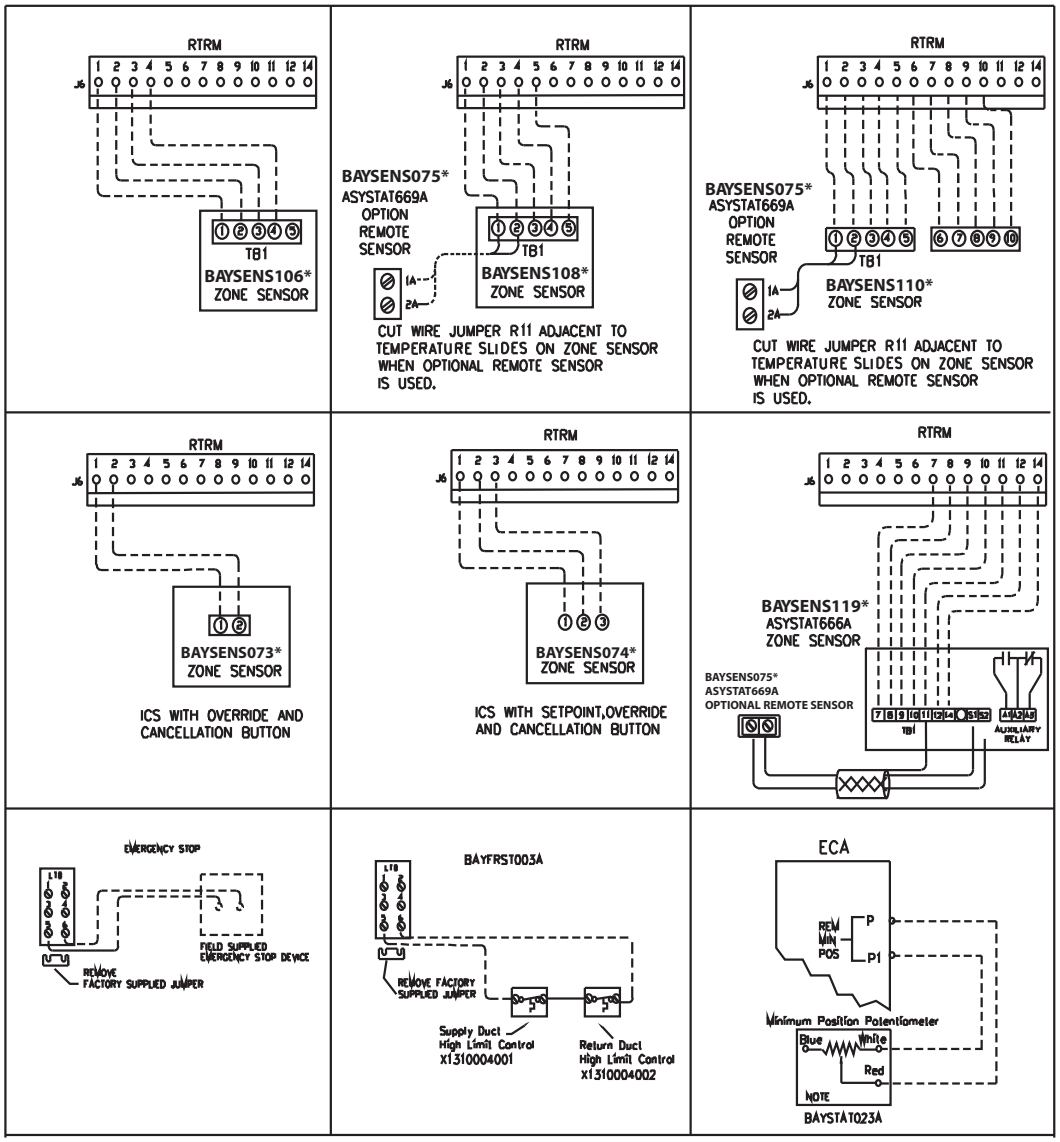

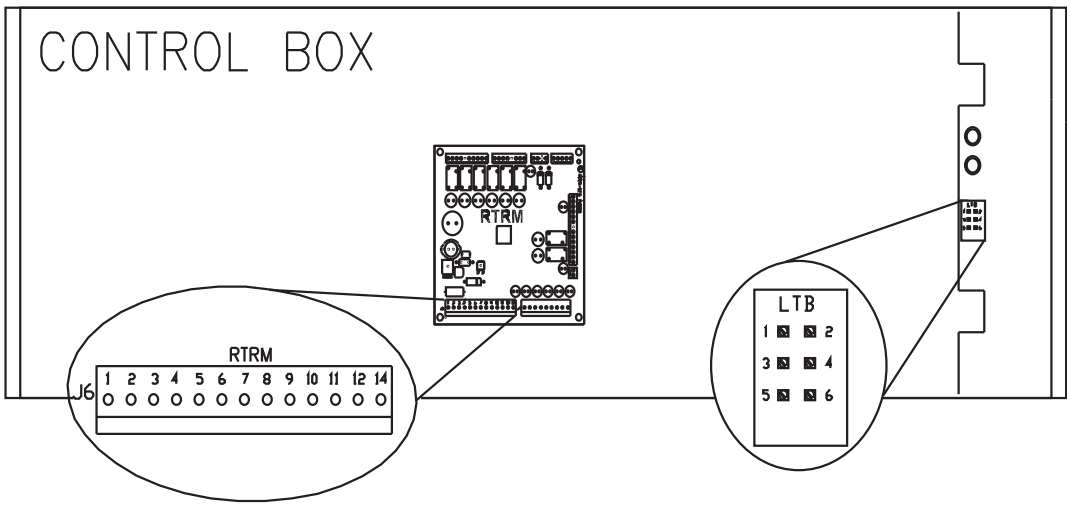

Table 7. Temperature vs. resistance

Temperature		
Degrees F°	**Degrees C°**	**Nominal Resistance**
-20°	-28.9°	170.1 K - Ohms
-15°	-26.1°	143.5 K - Ohms
-10°	-23.3°	121.4 K - Ohms
-5°	-20.6°	103.0 K - Ohms
0°	-17.8°	87.56 K - Ohms
5°	-15.0°	74.65 K - Ohms
10°	-12.2°	63.80 K - Ohms
15°	-9.4°	54.66 K - Ohms
20°	-6.7°	46.94 K - Ohms
25°	-3.8°	40.40 K - Ohms
30°	-1.1°	34.85 K - Ohms
35°	1.7°	30.18 K - Ohms
40°	4.4°	26.22 K - Ohms
45°	7.2°	22.85 K - Ohms
50°	10.0°	19.96 K - Ohms
55°	12.8°	17.47 K - Ohms
60°	15.6°	15.33 K - Ohms
65°	18.3°	13.49 K - Ohms
70°	21.1°	11.89 K - Ohms
75°	23.9°	10.50 K - Ohms
80°	26.7°	9.297 K - Ohms
85°	29.4°	8.247 K - Ohms
90°	32.2°	7.330 K - Ohms
95°	35.0°	6.528 K - Ohms

Table 8. Sizing natural gas pipe mains and branches

	Iron Pipe Size (IPS) Inches				
Length of Pipe (Ft.)	**½" Pipe**	**¾" Pipe**	**1" Pipe**	**1¼" Pipe**	**1½" Pipe**
15	76	176	345	750	1220
30	52	120	241	535	850
45	43	99	199	435	700
60	38	86	173	380	610
75		77	155	345	545

Note: Capacity of Pipe of Different Diameters and Lengths in Cu. Ft. Per Hr. with Pressure Drop of 0.3" and Specific Gravity of 0.60

Table 9. Iron pipe size (SI) millimeters

	Iron Pipe Size (SI) Millimeters				
Length of Pipe (Meters)	**15 mm Pipe**	**20 mm Pipe**	**25 mm Pipe**	**32 mm Pipe**	**40 mm Pipe**
4.6	2.15	4.98	9.76	21.23	34.54
9.1	1.47	3.39	6.82	15.14	24.06
13.7	1.21	2.80	5.63	12.31	19.82
18.3	1.07	2.43	4.89	10.76	17.27
22.9	—	2.18	4.38	9.76	15.40

Note: Capacity of Pipe of Different Diameters and Lengths in Cu. Meter Per Hr. with Pressure Drop of 74.6 Pa and Specific Gravity of 0.60.

Figure 53. Schematic diagram for field gas piping to unit

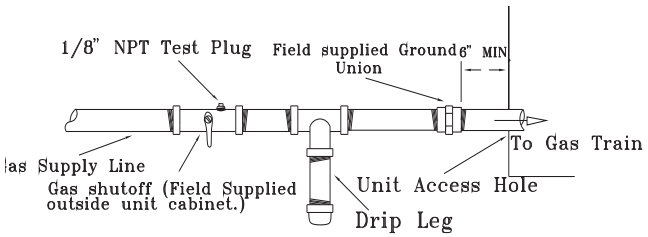

Pre-Start

Use the checklist provided below in conjunction with the "General Unit Requirements" checklist to ensure that the unit is properly installed and ready for operation.

⚠WARNING

Hazardous Voltage w/Capacitors!

Disconnect all electric power, including remote disconnects and discharge all motor start/run capacitors before servicing. Follow proper lockout/ tagout procedures to ensure the power cannot be inadvertently energized. Verify with an appropriate voltmeter that all capacitors have discharged. Failure to disconnect power and discharge capacitors before servicing could result in death or serious injury.

For additional information regarding the safe discharge of capacitors, see PROD-SVB06A-EN

Verify that the condenser airflow will be unobstructed.

⚠WARNING

Rotating Components!

During installation, testing, servicing and troubleshooting of this product it may be necessary to work with live and exposed rotating components. Have a qualified or licensed service individual who has been properly trained in handling exposed rotating components, perform these tasks. Failure to follow all safety precautions could result in rotating components cutting and slashing technician which could result in death or serious injury.

- Verify that the condenser fan and indoor blower turn freely without rubbing and are properly tightened on the shafts.
- Check the supply fan belts for proper tension and the fan bearings for sufficient lubrication. If the belts require adjustment, or if the bearings need lubricating, refer to the maintenance section of this manual for instructions.
- Verify that a condensate trap is installed and the piping is properly sized and pitched.
- Verify that the correct size and number of filters are in place.
- Inspect the interior of the unit for tools and debris and install all panels in preparation for starting the unit.

Voltage Imbalance

Three phase electrical power to the unit must meet stringent requirements for the unit to operate properly.

Measure each leg (phase-to-phase) of the power supply. Each reading must fall within the utilization range stamped on the unit nameplate. If any of the readings do not fall within the proper tolerances, notify the power company to correct this situation before operating the unit.

Excessive three phase voltage imbalance between phases will cause motors to overheat and eventually fail. The maximum allowable voltage imbalance is 2%. Measure and record the voltage between phases 1, 2, and 3 and calculate the amount of imbalance as follows:

$$\% \text{ Voltage Imbalance} = \frac{100 \times AV - VD}{AV} \text{ where;}$$

$$AV \text{ (Average Voltage)} = \frac{\text{Volt 1} + \text{Volt 2} + \text{Volt 3}}{3}$$

V1, V2, V3 = Line Voltage Readings

VD = Line Voltage reading that deviates the farthest from the average voltage.

Example: If the voltage readings of the supply power measured 221, 230, and 227, the average volts would be:

$$\frac{221 + 230 + 227}{3} = 226 \text{ Avg.}$$

VD (reading farthest from average) = 221

The percentage of imbalance equals:

$$\frac{100 \times 226 - 221}{226} = 2.2\%$$

The 2.2% imbalance in this example exceeds the maximum allowable imbalance of 2.0%. This much imbalance between phases can equal as much as a 20% current imbalance with a resulting increase in motor winding temperatures that will decrease motor life. If the voltage imbalance is over 2%, notify the proper agencies to correct the voltage problem before operating this equipment.

Electrical Phasing (Three Phase Motors)

The compressor motor(s) and the supply fan motor are internally connected for the proper rotation when the incoming power supply is phased as A, B, C.

Proper electrical supply phasing can be quickly determined and corrected before starting the unit by using an instrument such as an Associated Research Model 45 Phase Sequence Indicator and following the steps below:

- Turn the field supplied disconnect switch that provides power to the main power terminal block or to the "Line" side of the optional factory mounted disconnect switch to the "Off" position.
- Connect the phase sequence indicator leads to the terminal block or to the "Line" side of the optional factory mounted disconnect switch as follows;

  Black (phase A) to L1

  Red (phase B) to L2

  Yellow (phase C) to L3

- Close the field supplied main power disconnect switch or circuit protector switch that provides the supply power to the unit.

Note: *Upon closing main power disconnect and the unit mounted disconnect switch or circuit breaker, the phase monitor will verify proper phasing. If LED on face of the monitor is red, correct supply power fault.*

⚠WARNING

Live Electrical Components!

During installation, testing, servicing and troubleshooting of this product, it may be necessary to work with live electrical components. Have a qualified licensed electrician or other individual who has been properly trained in handling live electrical components perform these tasks. Failure to follow all electrical safety precautions when exposed to live electrical components could result in death or serious injury.

To prevent injury or death from electrocution, it is the responsibility of the technician to recognize this hazard and use extreme care when performing service procedures with the electrical power energized.

- Observe the ABC and CBA phase indicator lights on the face of the sequencer. The ABC indicator light will glow if the phase is ABC. If the CBA indicator light glows, open the disconnect switch or circuit protection switch and reverse any two power wires.
- Restore the main electrical power and recheck the phasing. If the phasing is correct, open the disconnect switch or circuit protection switch and remove the phase sequence indicator.

Compressor Crankcase Heaters (Optional)

Each compressor can be equipped with a crankcase heater (on some units the crankcase heater comes standard). The proper operation of the crankcase heater is important to maintain an elevated compressor oil temperature during the "Off" cycle to reduce oil foaming during compressor starts. Oil foaming occurs when refrigerant condenses in the compressor and mixes with the oil. In lower ambient conditions, refrigerant migration to the compressor could increase.

When the compressor starts, the sudden reduction in crankcase pressure causes the liquid refrigerant to boil rapidly causing the oil to foam. This condition could damage compressor bearings due to reduced lubrication and could cause compressor mechanical failures.

Before starting the unit in the "Cooling" mode, set the system switch to the "Off" position and turn the main power disconnect to the "On" position and allow the crankcase heater to operate a minimum of 8 hours.

Before closing the main power disconnect switch, insure that the "System" selection switch is in the "Off" position and the "Fan" selection switch is in the "Auto" position.

Close the main power disconnect switch and the unit mounted disconnect switch, if applicable.

Note: *Upon closing main power disconnect and the unit mounted disconnect switch or circuit breaker, the phase monitor will verify proper phasing. If LED on face of the monitor is red, correct supply power fault.*

⚠WARNING

Live Electrical Components!

During installation, testing, servicing and troubleshooting of this product, it may be necessary to work with live electrical components. Have a qualified licensed electrician or other individual who has been properly trained in handling live electrical components perform these tasks. Failure to follow all electrical safety precautions when exposed to live electrical components could result in death or serious injury.

To prevent injury or death from electrocution, it is the responsibility of the technician to recognize this hazard and use extreme care when performing service procedures with the electrical power energized.

ReliaTel™ Controls

Upon power initialization, the RTRM performs self-diagnostic checks to insure that all internal controls are functional. It also checks the configuration parameters against the components connected to the system. The Liteport LED located on the RTRM module is turned "On" within one second of power-up if internal operation is okay.

Use one of the following "Test" procedure to bypass some time delays and to start the unit at the control panel. Each step of unit operation can be activated individually by temporarily shorting across the "Test" terminals for two to three seconds. The Liteport LED located on the RTRM module will blink when the test mode has been initiated. The unit can be left in any "Test" step for up to one hour before it will automatically terminate, or it can be terminated by opening the main power disconnect switch. Once the test mode has been terminated, the Liteport LED will glow continuously and the unit will revert to the "System" control.

Table 10. Service test guide for component operation

Test Step	Mode	Fan	Econ [a]	Comp 1	Comp 2	Heat 1	Heat 2	Resistance	PWM Output[b]	Multi-Speed Fan Output
1	Fan	On	Minimum Position Setpoint 0%	Off	Off	Off	Off	2.2KΩ	50%	low
	Minimum Ventilation	On	Selectable	Off	Off	Off	Off			
2	Economizer Test Open	On	Open	Off	Off	Off	Off	3.3KΩ	50%[c]	low
3	Cool Stage 1	On	Minimum Position	On [d]	Off	Off	Off	4.7KΩ	82%	low
4 [e]	Cool Stage 2	On	Minimum Position	On [d]	On [d]	Off	Off	6.8KΩ	100%	High (2-step cooling) Low (3-step cooling)
5 [e]	Cool Stage 3	On	Minimum Position	On [d]	On [d]	Off	Off	8.2KΩ	100%	High
6 [e]	Reheat	On	Minimum	On	On	Off	Off	33KΩ	100%[f]	High
7 [e]	Heat Stage 1	On	Minimum	Off	Off	On	Off	10KΩ	100%	High
8 [e]	Heat Stage 2	On	Minimum	Off	Off	On	On	15KΩ	100%	High

(a) The exhaust fan will turn on anytime the economizer damper position is equal to or greater than the exhaust fan setpoint.
(b) The PWM Output is in reference to the user selected maximum unit fan speed.
(c) Regardless of the Economizer Mode configuration, the unit will run the Supply Fan at the minimum speed during the Economizer step of the Service Test.
(d) The condenser fans will operate any time a compressor is 'On' providing the outdoor air temperatures are within the operating values.
(e) Steps for optional accessories and non-applicable modes in unit will be skipped.
(f) Units with Enhanced Dehumidification only will not perform this step during Service Test.

Test Modes

There are three methods in which the "Test" mode can be cycled at LTB-Test 1 and LTB-Test 2.

1. Step Test Mode - This method initiates the different components of the unit, one at a time, by temporarily shorting across the two test terminals for two to three seconds. For the initial start-up of the unit, this method allows the technician to cycle a component "On" and have up to one hour to complete the check.
2. Resistance Test Mode - This method can be used for start-up providing a decade box for variable resistance outputs is available. This method initiates the different components of the unit, one at a time, when a specific resistance value is placed across the two test terminals. The unit will remain in the specific test mode for approximately one hour even though the resistance is left on the test terminals.
3. Auto Test Mode - This method is not recommended for start-up due to the short timing between individual component steps. This method initiates the different components of the unit, one at a time, when a jumper is installed across the test terminals. The unit will start the first test step and change to the next step every 30 seconds.

   At the end of the test mode, control of the unit will automatically revert to the applied "System" control method.

For unit test steps, test modes, and step resistance values to cycle the various components, refer to Table 10, p. 46.

ReliaTel™ Controls

Upon power initialization, the Gas Ignition Module (IGN) performs self-diagnostic checks to insure that all internal controls are functional. It also checks the configuration parameters against the components connected to the system. The System LED located on the IGN module is turned "On" within one second of power-up if internal operation is okay.

Electromechanical Controls Test Procedure

See unit schematic for correct wire numbers.

Fan Test and Minimum Ventilation

Connect red thermostat wire (R) to black thermostat wire (G).

Economizer Cooling

Connect a jumper wire across OTS on Economizer Control (ECA).

Connect red thermostat (R) wire to yellow thermostat wire (Y1).

Cool 1

Connect red thermostat wire (R) to yellow thermostat wire (Y1).

Cool 2

Connect red thermostat wire (R) to yellow thermostat wire (Y2).

Heat 1

Connect red thermostat wire (R) to brown thermostat wire (W1).

Heat 2

Connect red thermostat wire (R) to brown thermostat wire (W2).

Unit Start-Up

Verifying Proper Air Flow

⚠WARNING

Live Electrical Components!

During installation, testing, servicing and troubleshooting of this product, it may be necessary to work with live electrical components. Have a qualified licensed electrician or other individual who has been properly trained in handling live electrical components perform these tasks. Failure to follow all electrical safety precautions when exposed to live electrical components could result in death or serious injury.

Units with 5-Tap Direct Drive Indoor Fan

Much of the systems performance and reliability is closely associated with, and dependent upon having the proper airflow supplied both to the space that is being conditioned and across the evaporator coil.

The indoor fan motor is factory wired to operate on speed tap 1 in the cooling and heating mode for electric/electric units. For Gas/Electric units, the motor is factory wired to operate on speed tap 1 during cooling. For 3 & 4 ton Gas/Electric units operating in heat mode, the minimum setting is Tap 4.

For these units, a separate tap terminal is provided to change speeds automatically between heating and cooling. The motor can be rewired for different speed settings should the application require it. Refer to the wiring diagram that shipped in the unit and the unit fan performance tables in the Service Facts.

The indoor fan motors are specifically designed to operate within the BHP parameters listed in the fan performance tables of the unit Service Facts.

When verifying direct drive fan performance, the tables must be used somewhat differently than those of belt driven fans. Fan performance diagnostics can be easily recognized when these tables are used correctly.

Before starting the SERVICE TEST, set the minimum position setpoint for the economizer to 0 percent using the setpoint potentiometer located on the Economizer Control (ECA), if applicable.

ReliaTel™ Control: Using the Service Test Guide in Table 10, p. 46, momentarily jump across the Test 1 & Test 2 terminals on LTB1 one time to start the Minimum Ventilation Test.

Electromechanical Control: Using the Service Test Guide perform the proper test mode connections.

With the fan operating properly, determine the total system external static pressure (inches w.c.) by the following method (ReliaTel™/Electromechanical):

1. Measure the supply and return duct static pressure and sum the resulting absolute values,
2. Use the accessory pressure drop table in the Service Facts, to calculate the total static pressure drop for all of the accessories installed on the unit; i.e., curb, economizer, etc.

Note: *Accessory static pressure drop is based on desired CFM and may not be actual static pressure drop.*

3. Add the total accessory static pressure drop (step 2) to the duct external static pressure (step 1). The sum of these two values represents the total system external static pressure.

Using the Fan Performance Tables in the Service Facts, look up the selected speed tap setting and match the measured ESP to determine the approximate CFM.

If the required CFM is too low, (external static pressure is high) do one or both of the following and repeat procedure:

a. Relieve supply and/or return duct static.

b. Change indoor fan speed tap to a higher value

If the required CFM is too high, (external static pressure is low), do one or both of the following and repeat procedure:

a. Increase supply and/or return duct static.

b. Change indoor fan speed tap to a lower value.

Note: *Minimum setting for units with Gas or Electric Heat is 320 CFM per Ton. For 3 & 4 Ton Gas Heat units operating in heating mode the heat speed set cannot be lower than Speed Set 4.*

4. To stop the SERVICE TEST, turn the main power disconnect switch to the "Off" position or proceed to the next component start-up procedure.

Units with Belt Drive Indoor Fan

Much of the systems performance and reliability is closely associated with, and dependent upon having the proper airflow supplied both to the space that is being conditioned and across the evaporator coil.

The indoor fan speed is changed by opening or closing the adjustable motor sheave.

Before starting the SERVICE TEST, set the minimum position setpoint for the economizer to 0 percent using the setpoint potentiometer located on the Economizer Control (ECA), if applicable.

ReliaTel™ Control: Using the Service Test Guide in Table 10, p. 46, momentarily jump across the Test 1 & Test 2 terminals on LTB1 one time to start the Minimum Ventilation Test.

Electromechanical Control: Using the Service Test Guide perform the proper test mode connections. Once the supply fan has started, check for proper rotation. The

direction of rotation is indicated by an arrow on the fan housing.

With the fan operating properly, determine the total system airflow (CFM) by (ReliaTel™/Electromechanical):

1. Measuring the actual RPM,
2. Measure the amperage at the supply fan contactor and compare it with the full load amp (FLA) rating stamped on the motor nameplate.
   a. Calculate the theoretical BHP using (Actual Motor Amps/ Motor Nameplate Amps) X Motor HP.
   b. Using the fan performance tables in the unit Service Facts, plot the actual RPM (step 1) and the BHP (step 2a) to obtain the operating CFM.
3. If the required CFM is too low, (external static pressure is high causing motor HP output to be below table value),
   a. Relieve supply and/or return duct static.
   b. Change indoor fan speed and repeat steps 1 and 2.

- To Increase Fan RPM; Loosen the pulley adjustment set screw and turn sheave clockwise.
- To Decrease Fan RPM; Loosen the pulley adjustment set screw and turn sheave counterclockwise.
- If the required CFM is too high, (external static pressure is low causing motor HP output to be above table value), change indoor fan speed and repeat steps 1 and 2.
- To stop the SERVICE TEST, turn the main power disconnect switch to the "Off" position or proceed to the next component start-up procedure.

Units with Direct Drive Indoor Fan - Electromechanical Control

Much of the systems performance and reliability is closely associated with, and dependent upon having the proper airflow supplied both to the space that is being conditioned and across the evaporator coil. The indoor fan speed is changed by adjusting the output voltage from the MMC/ECM board to the direct drive fan. Before starting the SERVICE TEST, set the minimum position setpoint for the economizer to 0 percent using the setpoint potentiometer located on the Economizer Control (ECA), if applicable.

ReliaTel™ Units with Direct Drive Indoor Fan (7½ - 8½ Ton High Efficiency, 10 Ton Standard Efficiency)

Much of the systems performance and reliability is closely associated with, and dependent upon having the proper airflow supplied both to the space that is being conditioned and across the evaporator coil. The indoor fan speed is changed by adjusting the voltage from the RTOM Indoor Fan Speed output to the direct drive plenum fan. If installed, before starting the SERVICE TEST disable the Economizer by disconnecting the 4 pin power connector located at the base of the Economizer Control (ECA).

Using the Service Test Guide in Table 10, p. 60, momentarily jump across the Test 1 & Test 2 terminals on LTB1. Repeat process until Service Test Mode is at Cool 2 (2-Steps of Cooling Applications Only) or Cool 3 (3-Steps of Cooling applications). The indoor motor shall be operating @ 100%, to verify turn DA COOL_FAN SPD potentiometer full clockwise, voltage should read ~7.5 Vdc across harness test terminals. The Unit schematic illustrates location for measuring the indoor motor speed voltage.

Table 11. RPM table

Potentiometer Voltage	Motor RPM		Potentiometer Voltage	Motor RPM
1.25	217		4.50	1061
1.50	312		4.75	1126
1.75	362		5.00	1191
2.00	427		5.25	1253
2.25	479		5.50	1315
2.50	543		5.75	1374
2.75	605		6.00	1432
3.00	668		6.25	1487
3.25	732		6.50	1539
3.50	797		6.75	1588
3.75	863		7.00	1633
4.00	929		7.25	1675
4.25	995		7.50	1700

Note: Factory setting is 7.5V

Once the supply fan has started, determine the total system airflow (CFM)

1. Measure the DC voltage across harness test terminals. Using the fan rpm table shown above, determine RPM correlated to measured voltage.

2. If the required CFM is too low, (external static pressure is high causing motor HP output to be below table value),

a. Relieve supply and/or return duct static.

b. Change indoor fan speed and repeat steps 1 and 2.

- To Increase/Decrease Fan RPM turn DA COOL_FAN SPD on the RTOM clockwise/counter-clockwise.

3. If the required CFM is too high, (external static pressure is low causing motor HP output to be above table value), change indoor fan speed and repeat steps 1 and 2.

- Stop the SERVICE TEST, turn the main power disconnect switch to the "Off" position and reconnect Economizer 4-pin power connector if disconnected for this procedure.

Proceed to the next component start-up procedure.

Electromechanical Control: Using the Service Test Guide perform the proper test mode connections.

Once the supply fan has started, determine the total system airflow (CFM) by (ReliaTel™/Electromechanical):

1. Measure the DC voltage across pins Vt and com on the MMC board or note the DC voltage shown on the ECM board display. Using the fan rpm table shown above, determine RPM correlated to measured voltage.
2. Measure the amperage at the supply fan contactor and compare it with the full load amp (FLA) rating for the evaporator motor stamped on the unit nameplate.
   a. Calculate the theoretical BHP using (Actual Motor Amps/Motor Nameplate Amps) X Motor HP.
   b. Using the fan performance tables in the unit Service Facts, plot the actual RPM (step 1) and the BHP (step 2a) to obtain the operating CFM.
3. If the required CFM is too low, (external static pressure is high causing motor HP output to be below table value),
   a. Relieve supply and/or return duct static.
   b. Change indoor fan speed and repeat steps 1 and 2.

- For MMC board: To increase or decrease Fan RPM push and turn knob counter-clockwise or clockwise respectively. Measure the DC voltage across pins Vt and com on the MMC. Using the fan rpm table above, determine RPM correlated to measured voltage.
- For ECM board: To Increase/Decrease Fan RPM:
   a. Push and hold the SET button for 3 sec. Board will display Motor 1 parameter name: Hi 1.
   b. Slow push SET again to display the parameter's current value =7.50 volts.
   c. Push on + or – button to adjust parameter to desired value = XXX volts.
   d. Push and hold SET button for 3 sec to "save" the value. After save is complete, Hi 1 will show again.
   e. After the voltage Hi 1 is successfully changed, the display sequence will be:

MTR 1---> XXX -----> MTR2 -----> 0.00----->FST1---->ON/OFF----->FST2------>ON/OFF------->EhEn-- --->ON/OFF

The motor will ramp up or down to adjust to the input signal. Using the fan rpm table above, determine RPM correlated to displayed voltage.

- If the required CFM is too high, (external static pressure is low causing motor HP output to be above table value), change indoor fan speed and repeat steps 1 and 2.
- To stop the SERVICE TEST, turn the main power disconnect switch to the "Off" position or proceed to the next component start-up procedure.

Units with Constant CFM Direct Drive Indoor Fan

Much of the systems performance and reliability is closely associated with, and dependent upon having the proper airflow supplied both to the space that is being conditioned and across the evaporator coil. The indoor fan provides a constant CFM base on voltage output for the potentiometer on the RTOM board. Before starting the SERVICE TEST, set the minimum position setpoint for the economizer to 0% using the setpoint potentiometer located on the Economizer Control (ECA), if applicable.

ReliaTel™ Control. Using the Service Test Guide in Table 10, p. 46, momentarily jump across the Test 1 & Test 2 terminals on LTB1 one time to start the Minimum Ventilation Test.

Once the supply fan has started, determine the total system airflow (CFM) by:

1. Measure the DC voltage across pins TP1 and ground (screw on corner of RTOM board). Lookup desired CFM using the voltage CFM table shown on the access panel label or in the unit Service Facts; record corresponding voltage. Adjust potentiometer until output voltage across TP1 and ground achieves desired CFM setpoint.
2. To increase voltage/CFM, turn potentiometer clockwise.
3. To decrease voltage/CFM, turn potentiometer counter-clockwise.

Note: *With ID fan access panel removed, fan will operate at lower RPM due to the decrease in pressure. Once panel is installed, RPM will increase.*

17 Plus units with the constant CFM direct drive indoor fan

Proper airflow is critical to unit operation. All 17 Plus Precedent units (037, 047, and 067 units) use an indoor fan that provides a constant CFM. There are two different types of 17 Plus Precedent units: Single Zone VAV units and Multi Speed units. Both types of units use the same type of indoor motor and the same airflow adjustment procedure.

To adjust airflow on a 17 Plus unit the Service Test mode must be used for accurate results. Additionally, airflow adjustments should be made in either "Cool Stage 2" or any stage of heat because the fan is driven to its maximum setting during these stages. Only the maximum fan setting requires adjustment, all other fan speeds follow the maximum adjustment and do not require any adjustment.

Using the Service Test Guide in Table 10, p. 46, enter the unit into either "Cool Stage 2" or any stage of heat by using either the "Step Test Mode" or "Resistance Test Mode".

Once the unit is in either "Cool Stage 2" or any stage of heat, system airflow (CFM) is determined by:

1. In the indoor fan compartment, locate the R136 potentiometer on the RTOM circuit board (also designated "DA COOL - FAN SPD"). Also, locate the TP1 test pin loop next to the R136 potentiometer.
2. Measure the DC Voltage across the test pin TP1 and unit chassis ground. Compare DC voltage to the CFM

chart shown in Table 12, p. 51. Table 12, p. 51 shows what DC voltage corresponds to CFM per ton of unit cooling.

Note: *If 1200 cfm is required from a 3 ton unit (037) the R136 potentiometer should be adjusted so that the DC voltage measured at TP1 to ground reads 1.65 volts DC.*

3. To increase the TP1 voltage, turn the R136 potentiometer clockwise.
4. To decrease the TP1 voltage, turn the R136 potentiometer counter-clockwise.

Note: *With the indoor fan access panel removed, the fan will operate at a lower RPM because static pressure is reduced with the door open. Once the panel is returned the RPM of the indoor fan will increase.*

Table 12. Cfm vs. vdc

PWM% value	Potentiometer Voltage (vdc)	CFM/Ton
70	<0.1	320
75	0.7	347
80	1.25	373
85	1.65	400
90	1.95	427
95	2.17	453
100	>2.4	480

Variable Air Volume Applications (Traditional VAV)

Supply Air Temperature Control - Occupied Cooling and Heating

The RTRM is designed to maintain a selectable supply air temperature of 40°F to 90°F with a +/- 3.5°F deadband. In cooling, if supply air temperature is more than 3.5 degrees warmer than the selected temperature, a stage of cooling will be turned "On" (if available). Then if the supply air temperature is more than 3.5° cooler than the selected temperature, a stage of cooling will be turned "Off". At very low airflows the unit may cycle stages "On" and "Off" to maintain an average discharge air temperature outside the 7° deadband. During low load or low airflow conditions the actual temperature swing of the discharge air will likely be greater. The RTRM utilizes a proportional and integral control scheme with the integration occurring when the supply air temperature is outside the deadband. As long as the supply air temperature is within the setpoint deadband, the system is considered to be satisfied and no staging up or down will occur.

Note: *The RTRM is designed to maintain a selectable supply air temperature of 40°F to 90°F with a +/- 3.5°F deadband. However, to reduce the risk of evaporator coil freeze-up in Precedent and Voyager Light Commercial applications, supply air temperature should not be set below 50° F.*

Supply Air Temperature Control with an Economizer

The economizer is utilized to control the supply air cooling at +1.5°F around the supply air temperature setpoint range of 40°F and 90°F providing the outside air conditions are suitable. To reduce the risk of evaporator coil freeze-up supply air temperature should not be set below 50° F. While economizing, the mechanical cooling is disabled until the economizer dampers have been fully open for three minutes. If the economizer is disabled due to unsuitable conditions, the mechanical cooling will cycle as though the unit had no economizer.

Note: *The RTRM is designed to maintain a selectable supply air temperature of 40°F to 90°F with a +/- 3.5°F deadband. However, to reduce the risk of evaporator coil freeze-up in Precedent and Voyager Light Commercial applications, supply air temperature should not be set below 50°F.*

VHR Relay Output

During unoccupied mode, daytime warm-up (DWU), morning warm-up (MWU) and heating mode the Supply Fan will operate at 100% of user set maximum airflow. All VAV boxes must be opened through an ICS program or by the VHR wired to the VAV boxes. The RTRM will delay 100% fan operation approximately 6.5 minutes when switching from occupied cooling mode to a heating mode.

Zone Temperature Control without a Night Setback Panel or ICS - Unoccupied Cooling

When a field supplied occupied/unoccupied switching device is connected between RTRM J6-11 and RTRM J6-12, both the economizer and the mechanical cooling will be disabled.

Zone Temperature Control without a Night Setback Panel or ICS - Unoccupied Heating

When a field supplied occupied/unoccupied switching device is connected between RTRM J6-11 and J6-12 and DWU is enabled, the zone temperature will be controlled at 10°F below the Morning Warm-up setpoint, but not less than 50°F, by cycling one or two stages of either gas or electric heat, whichever is applicable.

Morning Warm-up (MWU) Control

Morning Warm-up is activated if the zone temperature is at least 1.5°F below the MWU setpoint whenever the system switches from Unoccupied to Occupied status. The MWU setpoint may be set from the unit mounted potentiometer or a remotely mounted potentiometer. The setpoint ranges are from 50°F to 90°F. When the zone temperature meets or exceeds the MWU setpoint, the unit will switch to the "Cooling" mode. The economizer will be held closed during the morning warm-up cycle.

Daytime Warm-up (DWU) Control

Daytime Warm-up is applicable during occupied status and when the zone temperature is below the initiation temperature. It can be activated or deactivated through ICS or a night setback zone sensor. If ICS or a night setback zone sensor is not utilized, DWU can be activated by setting the DWU enable DIP switch (RTAM) to ON and supplying a valid morning warm-up setpoint.

The unit is shipped with a Morning Warm-up setpoint configured and the Daytime Warm-up function is activated (switch on). Opening the DWU enable switch will disable this function.

If the system control is local, the DWU initiation setpoint is 3°F below the Morning Warm-up setpoint. The termination setpoint is equal to the Morning Warm-up setpoint.

If the system control is remote (Tracer™), the DWU setpoint is equal to the Tracer Occupied heating setpoint. The initiation and termination setpoints are selectable setpoints designated by Tracer.

When the zone temperature meets or exceeds the termination setpoint while the unit is in an Occupied, "Auto" Mode or switched to the "Cooling" Mode, the unit will revert to the cooling operation.

If an Occupied "Heating" Mode is selected, the unit will only function within the DWU perimeters until the system is switched from the "Heat" Mode or enters an Unoccupied status.

Note: *When a LCI is installed on a VAV unit, the MWU setpoint located on the RTAM board is ignored. The MWU and DWU setpoints come from the higher priority LCI-R DAC.*

Supply Duct Static Pressure Control

The supply duct static pressure is measured by a transducer with a 0.25 to 2.125 Vdc proportional output which corresponds to an adjustable supply duct static pressure of 0.3" w.c. to 2.5" w.c. respectively with a deadband adjustment range from 0.2" w.c. to 1.0" w.c. The setpoint is adjustable on the RTAM Static Pressure Setpoint potentiometer or through ICS.

Traditional VAV Standalone Operation

If a traditional VAV unit is required to operate without ICS, BAS or other "front end" controller, a jumper must be placed between J6-2 and J6-4 of the RTRM to allow local standalone control.

Example:

Supply Duct Static setpoint = 2.0" w.c. (RTAM)

Deadband = 0.2" w.c. (RTAM)

Duct Static Control Range = 1.9" w.c. to 2.1" w.c.

Figure 54. Transducer voltage output vs. pressure input

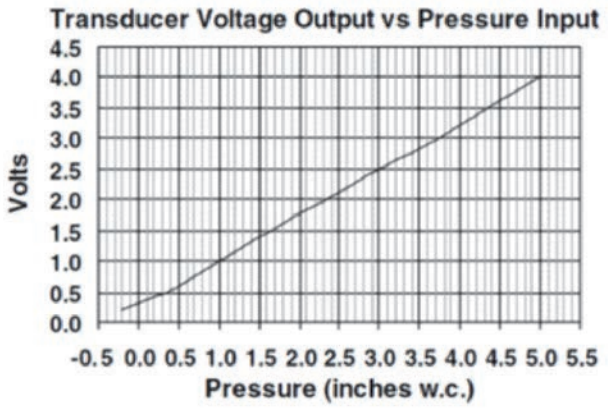

Supply Air Temperature Reset

The supply air temperature can be reset by using one of four DIP switch configurations on the RTAM or through ICS when a valid supply air reset setpoint with a supply air reset amount is given. A selectable reset amount of 0° F to 20°F via RTAM potentiometer or ICS is permissible for each type of reset.

The amount of change applied to the supply air temperature setpoint depends on how far the return air, zone, or outdoor air temperature falls below the reset temperature setpoint. If the return air, zone, or outdoor air temperature is equal to or greater than the reset temperature setpoint, the amount of change is zero.

If the return air, or zone temperature falls 3°F below the reset temperature setpoint, the amount of reset applied to the supply air temperature will equal the maximum amount of reset selected.

If the outdoor air temperature falls 20°F below the reset temperature setpoint, the amount of reset applied to the supply air temperature will equal the maximum amount of reset selected. The four DIP switch configurations are as follows:

1. None - When RTAM DIP Switch #3 and #4 are in the "Off" position, no reset will be allowed.
2. Reset based on Return Air Temperature - When RTAM DIP Switch #3 is "Off" and Switch #4 is "On", a selectable supply air reset setpoint of 50°F to 90°F via a unit mounted potentiometer or Tracer™ is permissible.
3. Reset based on Zone Temperature - When RTAM DIP Switch #3 is "On" and Switch #4 is "Off", a selectable supply air reset setpoint of 50°F to 90°F via RTAM potentiometer or Tracer is permissible.

4. Reset based on Outdoor Air Temperature - When DIP Switch #3 and #4 are "On", a selectable supply air reset setpoint of 0°F to 100°F via RTAM potentiometer or Tracer is permissible.

Return Air Smoke Detector

The return air smoke detector is designed to shut off the unit if smoke is sensed in the return air stream. Sampling the airflow entering the unit at the return air opening performs this function.

In order for the smoke detector to properly sense smoke in the return air stream, the air velocity entering the unit must be between 500 and 4000 feet per minute. Equipment covered in this manual will develop an airflow velocity that falls within these limits over the entire airflow range specified in the evaporator fan performance tables.

There are certain models however, if operated at low airflow, will not develop an airflow velocity that falls within the required 500 to 4000 feet per minute range. For these models, the design airflow shall be greater than or equal to the minimum CFM specified in the table provided below. Failure to follow these instructions will prevent the smoke detector from performing its design function.

Economizer Start-Up

⚠WARNING

Live Electrical Components!

During installation, testing, servicing and troubleshooting of this product, it may be necessary to work with live electrical components. Have a qualified licensed electrician or other individual who has been properly trained in handling live electrical components perform these tasks. Failure to follow all electrical safety precautions when exposed to live electrical components could result in death or serious injury.

Minimum Position Setting for 17 Plus, 7.5-10 Ton with Multi-Speed, or Single Zone VAV

1. Apply power to the unit
2. Using the Service Test Guide on unit access panel, momentarily jump across the Test 1 & Test 2 terminals on LTB1 one time to start indoor fan.
3. Turn the MIN POS - DCV potentiometer on the RTEM clockwise to open or counter-clockwise to close. The damper will open to this setting for low speed fan operation. When adjusting minimum position, the damper may move to the new setting in several small steps. Wait at least 15 seconds for the damper to settle at the new position. Range of damper for this setting is 0-100%.
4. Momentarily jump across the Test 1 & Test 2 terminals on LTB1, to cycle through test modes to Cool 1.
5. Turn the DCV SETPOINT - LL potentiometer on the RTEM clockwise to open or counter-clockwise to close. This will set the minimum damper position at an intermediate point of fan operation range of damper for this setting is 0-75%.
6. Momentarily jump across the Test 1 & Test 2 terminals on LTB1, to cycle through test modes to Cool 2.
7. Turn the MIN POS - DESIGN potentiometer on the RTEM clockwise to open or counter-clockwise to close. This will set the minimum damper position at maximum fan speed. Range of damper for this setting is 0-50%.
8. The economizer minimum damper position for all fan speeds is complete. The RTEM will control minimum damper position along an imaginary line between the 3 damper minimum positions based on fan speed. Note: The RTEM will limit intermediate minimum damper position to ensure proper ventilation based upon the low fan speed minimum damper position set in Step 3.
9. Replace the filter access panel. The damper will close when the blower circuit is de-energized.

⚠WARNING

Live Electrical Components!

During installation, testing, servicing and troubleshooting of this product, it may be necessary to work with live electrical components. Have a qualified licensed electrician or other individual who has been properly trained in handling live electrical components perform these tasks. Failure to follow all electrical safety precautions when exposed to live electrical components could result in death or serious injury.

ReliaTel™ Control: Using the Service Test Guide in Table 10, p. 46, momentarily jump across the Test 1 & Test 2 terminals on LTB1 one time to start the Minimum Ventilation Test.

Electromechanical Control: Using the Service Test Guide perform the proper test mode connections.

1. Set the minimum position setpoint for the economizer to the required percentage of minimum ventilation using the setpoint potentiometer located on the Economizer Control (ECA).

   The economizer will drive to its minimum position setpoint, exhaust fans (if applicable) may start at random, and the supply fan will start when the SERVICE TEST is initiated.

⚠WARNING

Rotating Components!

During installation, testing, servicing and troubleshooting of this product it may be necessary to work with live and exposed rotating components. Have a qualified or licensed service individual who has been properly trained in handling exposed rotating components, perform these tasks. Failure to follow all safety precautions could result in rotating components cutting and slashing technician which could result in death or serious injury.

The Exhaust Fan will start anytime the economizer damper position is equal to or greater than the exhaust fan setpoint.

2. Verify that the dampers stroked to the minimum position.

   ReliaTel™ Control:

   Momentarily jump across the Test 1 & Test 2 terminals on LTB1 one additional time if continuing from previous component start-up or until the desired start-up component test is started.

   Electromechanical Control:

   Using the Service Test Guide perform the proper test mode connections.

3. Verify that the dampers stroked to the full open position.
4. To stop the SERVICE TEST, turn the main power disconnect switch to the "Off" position or proceed to the next component start-up procedure. Remove electromechanical test mode connections (if applicable).

Compressor Start-Up

1. Attach a set of service gauges onto the suction and discharge gauge ports for each circuit. Refer to the refrigerant circuit illustration in the Service Facts.

   ReliaTel™ Control:

   Momentarily jump across the Test 1 & Test 2 terminals on LTB1 one additional time if continuing from previous component start-up or until the desired start-up component Test is started.

   Electromechanical Control:

   Using the Service Test Guide perform the proper test mode connections.

   Scroll Compressors

   a. Once each compressor has started, verify that the rotation is correct. If a scroll compressor is rotating backwards, it will not pump and a loud rattling sound can be observed.

   b. If the electrical phasing is correct, before condemning a compressor, interchange any two leads (at the compressor Terminal block) to check the internal phasing. If the compressor runs backward for an extended period (15 to 30 minutes), the motor winding can overheat and cause the motor winding thermostat to open.

2. After the compressor and condenser fan have started and operated for approximately 30 minutes, observe the operating pressures. Compare the operating pressures to the operating pressure curve in the Service Facts.
3. Check system superheat. Follow the instruction listed on the superheat charging curve in the Service Facts.

   Superheat should be within ±5 F of the superheat chart value.

4. Repeat steps 1 through 4 for each refrigerant circuit.
5. To stop the SERVICE TEST, turn the main power disconnect switch to the "Off" position or proceed to the next component start-up procedure. Remove electromechanical test mode connections (if applicable).

Dehumidification Option

⚠WARNING

Live Electrical Components!

During installation, testing, servicing and troubleshooting of this product, it may be necessary to work with live electrical components. Have a qualified licensed electrician or other individual who has been properly trained in handling live electrical components perform these tasks. Failure to follow all electrical safety precautions when exposed to live electrical components could result in death or serious injury.

Momentarily jump across the Test 1 and Test 2 terminals of the LTB1 until the unit enters test mode 7 (See Table 10, p. 46). Once the unit is in the reheat test mode, verify that the 3 way valve has shifted to the reheat position and that the supply temperature rises 10°F more than when in cooling mode stage 2.

Monitor the suction pressure for 15 minutes. The suction pressure should remain within 5 psi of normal cooling operation.

Gas Heat Units

Open the main disconnect switch to shut the unit off and to reset the RTRM.

ReliaTel™ Control: Follow the Test Guide in Table 10, p. 46 to start the unit in the heating mode. Momentarily jump across the Test 1 & Test 2 terminals on LTB1 one additional time if continuing from previous component start-up or until the desired start-up component Test is started.

Electromechanical Control. Using the Service Test Guide perform the proper test mode connections.

When starting the unit for the first time or servicing the heaters, it is a good practice to start the heater with the main gas supply turned "Off".

Once the ignition system and components have been checked, open the main power disconnect switch to reset the unit.

Final System Setup

After completing all of the pre-start and start-up procedures outlined in the previous sections (i.e., operating the unit in each of its Modes through all available stages of cooling & heating), perform these final checks before leaving the unit:

- Program the Night Setback (NSB) panel (if applicable) for proper unoccupied operation. Refer to the programming instructions for the specific panel.
- Verify that the Remote panel "System" selection switch, "Fan" selection switch, and "Zone Temperature" settings for automatic operation are correct.
- Inspect the unit for misplaced tools, hardware, and debris.
- Verify that all exterior panels including the control panel doors and condenser grilles are secured in place.
- Close the main disconnect switch or circuit protector switch that provides the supply power to the unit's terminal block or the unit mounted disconnect switch.

Maintenance

⚠WARNING

Hazardous Service Procedures!

The maintenance procedures recommended in this section of the manual could result in exposure to electrical, mechanical or other potential safety hazards. Always refer to the safety warnings provided throughout this manual concerning these procedures. Unless specified otherwise, disconnect all electrical power including remote disconnect and discharge all energy storing devices such as capacitors before servicing. Follow proper lockout/tagout procedures to ensure the power can not be inadvertently energized. When necessary to work with live electrical components, have a qualified licensed electrician or other individual who has been trained in handling live electrical components perform these tasks. Failure to follow all of the recommended safety warnings provided, could result in death or serious injury.

Fan Belt Adjustment - Belt Drive Units

⚠WARNING

Live Electrical Components!

During installation, testing, servicing and troubleshooting of this product, it may be necessary to work with live electrical components. Have a qualified licensed electrician or other individual who has been properly trained in handling live electrical components perform these tasks. Failure to follow all electrical safety precautions when exposed to live electrical components could result in death or serious injury.

⚠WARNING

Rotating Components!

During installation, testing, servicing and troubleshooting of this product it may be necessary to work with live and exposed rotating components. Have a qualified or licensed service individual who has been properly trained in handling exposed rotating components, perform these tasks. Failure to follow all safety precautions could result in rotating components cutting and slashing technician which could result in death or serious injury.

The fan belts must be inspected periodically to assure proper unit operation.

Replacement is necessary if the belts appear frayed or worn. Units with dual belts require a matched set of belts to ensure equal belt length.

When removing or installing the new belts, do not stretch them over the sheaves. Loosen the belts using the belt tension adjustment bolts on the motor mounting base.

Once the new belts are installed, using a Browning or Gates tension gauge (or equivalent) illustrated in Figure 55, p. 56, adjust the belt tension as follows;

1. To determine the appropriate belt deflection;
   a. Measure the center-to-center shaft distance (in inches) between the fan and motor sheaves.
   b. Divide the distance measured in Step 1a by 64; the resulting value represents the amount of belt deflection that corresponds to the proper belt tension.
2. Set the large O-ring on the belt tension gauge at the deflection value determined in Step 1b.
3. Set the small O-ring at zero on the force scale of the gauge plunger.
4. Place the large end of the gauge at the center of the belt span, then depress the gauge plunger until the large O-ring is even with the top of the next belt or even with a straightedge placed across the fan and motor sheaves. Refer to Figure 55, p. 56.
5. Remove the belt tension gauge. The small O-ring now indicates a number other than zero on the plunger's force scale. This number represents the force (in pounds) required to give the needed deflection.
6. Compare the "force" scale reading (Step 5) with the appropriate "force" value listed in Table 13, p. 57. If the "force" reading is outside the range, readjust the belt tension.

Note: *Actual belt deflection "force" must not exceed the maximum "force" value shown in Figure 55, p. 56.*

7. Recheck the belt tension at least twice during the first 2 to 3 days of operation. Belt tension may decrease until the new belts are "run in".

Figure 55. Belt tension gauge

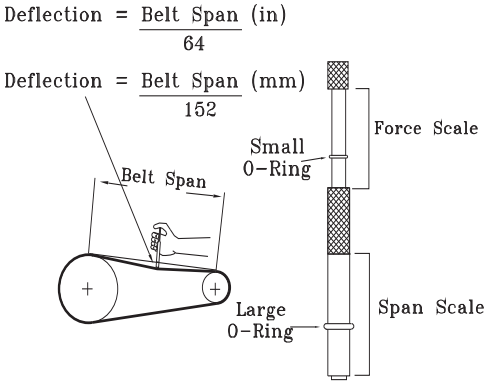

Table 13. Belt tension measurement and deflection

Belts Cross Section	Small P.D Range	Deflection Force (Lbs.) Super Gripbelts		Gripnotch		Steel Cable Gripbelts	
		Min.	Max.	Min.	Max.	Min.	Max
A	3.0 - 3.6	3	4 1/2	3 7/8	5 1/2	3 1/4	4
	3.8 - 4.8	3 1/2	5	4 1/2	6 1/4	3 3/4	4 3/4
	5.0 - 7.0	4	5 1/2	5	6 7/8	4 1/4	5 1/4
B	3.4 - 4.2	4	5 1/2	5 3/4	8	4 1/2	5 1/2
	4.4 - 5.6	5 1/8	7 1/8	6 1/2	9 1/8	5 3/4	7 1/4
	5.8 - 8.8	6 3/8	8 3/4	7 3/8	10 1/8	7	8 3/4

Monthly Maintenance

⚠WARNING

Hazardous Voltage!

Disconnect all electric power, including remote disconnects before servicing. Follow proper lockout/tagout procedures to ensure the power can not be inadvertently energized. Failure to disconnect power before servicing could result in death or serious injury.

Before completing the following checks, turn the unit OFF and lock the main power disconnect switch open.

Filters

Inspect the return air filters. Clean or replace them if necessary. If included, leave filter removal tool in unit. Refer to the unit Service Facts for filter information.

Return Air Smoke Detector Maintenance

Airflow through the unit is affected by the amount of dirt and debris accumulated on the indoor coil and filters. To insure that airflow through the unit is adequate for proper sampling by the return air smoke detector, complete adherence to the maintenance procedures, including recommended intervals between filter changes, and coil cleaning is required.

Periodic checks and maintenance procedures must be performed on the smoke detector to insure that it will function properly. For detailed instructions concerning these checks and procedures, refer to the appropriate section(s) of the smoke detector Installation and Maintenance Instructions provided with the literature package for this unit.

Condensate Overflow Switch

During maintenance, the switch float (black ring) must be checked to ensure free movement up and down.

Cooling Season

- Check the unit's drain pans and condensate piping to ensure that there are no blockages.
- Inspect the evaporator and condenser coils for dirt, bent fins, etc. If the coils appear dirty, clean them according to the instructions described in "Coil Cleaning" later in this section.
- Manually rotate the condenser fan(s) to ensure free movement and check motor bearings for wear. Verify that all of the fan mounting hardware is tight.
- Inspect the F/A-R/A damper hinges and pins to ensure that all moving parts are securely mounted. Keep the blades clean as necessary.
- Verify that all damper linkages move freely; lubricate with white grease, if necessary.
- Check supply fan motor bearings; repair or replace the motor as necessary.
- Check the fan shaft bearings for wear. Replace the bearings as necessary.
- Check the supply fan belt. If the belt is frayed or worn, replace it. Refer to the "Fan Belt Adjustment" section for belt replacement and adjustments.
- Verify that all wire terminal connections are tight.
- Remove any corrosion present on the exterior surfaces of the unit and repaint these areas.
- Generally inspect the unit for unusual conditions (e.g., loose access panels, leaking piping connections, etc.)
- Make sure that all retaining screws are reinstalled in the unit access panels once these checks are complete.
- With the unit running, check and record the: ambient temperature; compressor suction and discharge pressures (each circuit); superheat (each circuit);
- Record this data on an "operator's maintenance log" like the one shown in Table 14, p. 59. If the operating pressures indicate a refrigerant shortage, measure the system superheat. For guidelines, refer to the "Compressor Start-Up" section.

Important: *Do not release refrigerant to the atmosphere! If adding or removing refrigerant is required, the service technician must comply with all federal, state and local laws.*

Heating Season

- Inspect the unit's air filters. If necessary, clean or replace them.
- Check supply fan motor bearings; repair or replace the motor as necessary.
- Inspect both the main unit control panel and heat section control box for loose electrical components and terminal connections, as well as damaged wire insulation. Make any necessary repairs.

- Clean burner area, verify gas heat system operates properly.

Coil Cleaning

Regular coil maintenance, including annual cleaning, enhances the unit's operating efficiency by minimizing: compressor head pressure and amperage draw, evaporator water carryover, fan brake horsepower due to increase static pressure losses, airflow reduction.

At least once each year, or more often if the unit is located in a "dirty" environment, clean the evaporator and condenser coils using the instructions outlined below. Be sure to follow these instructions as closely as possible to avoid damaging the coils.

Note: *For units equipped with hail guards follow removal procedure listed below.*

Hail Guard Removal

- Unlatch hail guard.
- Pull the top of the hail guard outward until the fastener studs are free of the retaining nuts.
- Lift the hail guard from the lower retaining bracket and set aside.

Microchannel (MCHE) Coils

NOTICE:

Coil Damage!

DO NOT use any detergents with microchannel condenser coils. Use pressurized water or air ONLY, with pressure no greater than 600psi. Failure to do so could result in coil damage.

For additional information regarding the proper microchannel coil cleaning procedure, refer to RT-SVB83-EN.*

Due to the soft material and thin walls of the MCHE coils, the traditional field maintenance method recommended for Round Tube Plate Fin (RTPF) coils does not apply to microchannel coils.

Moreover, chemical cleaners are a risk factor to MCHE due to the material of the coil. The manufacturer does not recommend the use of chemical cleaners to clean microchannel coils. Using chemical cleaners could lead to warranty claims being further evaluated for validity and failure analysis.

The recommended cleaning method for microchannel condenser coils is pressurized water or air with a non-pinpoint nozzle and an ECU of at least 180 with pressure no greater than 600 psi. To minimize the risk of coil damage, approach the cleaning of the coil with the pressure washer aimed perpendicular to the face of the coil during cleaning.

Note: *For more details on Microchannel coil cleaning, please refer to bulletin RT-SVB83*-EN.*

Round Tube Plate Fin (RTPF) Coils

To clean refrigerant coils, use a soft brush and a sprayer (either a garden pump-up type or a high-pressure sprayer). A high-quality detergent is also required; suggested brands include "SPREX A.C.", "OAKITE 161", "OAKITE 166" and "COILOX". If the detergent selected is strongly alkaline (ph value exceeds 8.5), add an inhibitor.

⚠WARNING

Hazardous Chemicals!

Coil cleaning agents can be either acidic or highly alkaline and can burn severely if contact with skin occurs. Handle chemical carefully and avoid contact with skin. ALWAYS wear Personal Protective Equipment (PPE) including goggles or face shield, chemical resistant gloves, boots, apron or suit as required. For personal safety refer to the cleaning agent manufacturer's Materials Safety Data Sheet and follow all recommended safe handling practices. Failure to follow all safety instructions could result in death or serious injury.

1. Remove enough panels from the unit to gain access to the coil.
2. Protect all electrical devices such as motors and controllers from any over spray.
3. Straighten any bent coil fins with a fin comb.

⚠WARNING

Hazardous Pressures!

Coils contain refrigerant under pressure. When cleaning coils, maintain coil cleaning solution temperature under 150°F to avoid excessive pressure in the coil. Failure to follow these safety precautions could result in coil bursting, which could result in death or serious injury.

4. Mix the detergent with water according to the manufacturer's instructions. If desired, heat the solution BUT DO NOT EXCEED 150°F maximum to improve its cleansing capability.
5. Pour the cleaning solution into the sprayer. If a high-pressure sprayer is used:
   a. do not allow sprayer pressure to exceed 600 psi.
   b. the minimum nozzle spray angle is 15 degrees.
   c. maintain a minimum clearance of 6" between the sprayer nozzle and the coil.
   d. spray the solution perpendicular (at 90 degrees) to the coil face.
6. Spray the leaving-airflow side of the coil first; then spray the opposite side of the coil. Allow the cleaning solution to stand on the coil for five minutes.
7. Rinse both sides of the coil with cool, clean water.

8. Inspect both sides of the coil; if it still appears to be dirty, repeat Step 6 and Step 7.
9. Reinstall all of the components and panels removed in Step 1 and any protective covers installed in Step 2.

Note: *For units equipped with hail guards follow reinstallation procedure listed below.*

Hail Guard Reinstallation

10. To reinstall the hail guard, locate the bottom of the hail guard in the lower bracket and secure it to the upper unit bracket with the attached fasteners.

Note: *Secure hail guard latches.*

Figure 56. Hail guard

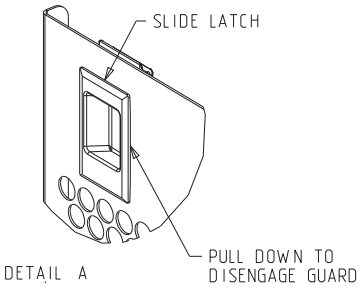

11. Restore the unit to its operational status and check system operation.

Annual Maintenance

- Clean and repaint any corroded surface.

Final Process

For future reference, you may find it helpful to record the unit data requested in the blanks provided.

Complete Model Number: _____

Unit Serial Number: _____

Wiring Diagram Numbers (from unit control panel): _____

Connections: _____

Schematics: _____

Table 14. Sample maintenance log

		Refrigerant Circuit #1						Refrigerant Circuit #2					
Date	Current Ambient Temp. F/C	Compr. Oil Level	Suct. Press. Psig/ kPa	Disch. Press. Psig/ kPa	Liquid Press. Psig/ kPa	Super -heat F/C	Sub- cool. F/C	Compr. Oil Level	Suct. Press. Psig/kPa	Disch. Press. Psig/ kPa	Liquid Press. Psig/ kPa	Super- heat F/C	Sub- cool. F/C
		- ok - low						- ok - low					
		- ok - low						- ok - low					
		- ok - low						- ok - low					
		- ok\ - low						-- ok - low					
		- ok - low						- ok - low					

Note: *Check and record the data requested above each month during the cooling season with the unit running.*

Troubleshooting

⚠WARNING

Hazardous Service Procedures!

The troubleshooting procedures recommended in this section of the manual could result in exposure to electrical, mechanical or other potential safety hazards. Always refer to the safety warnings provided throughout this manual concerning these procedures. Unless specified otherwise, disconnect all electrical power including remote disconnect and discharge all energy storing devices such as capacitors before servicing. Follow proper lockout/tagout procedures to ensure the power can not be inadvertently energized. When necessary to work with live electrical components, have a qualified licensed electrician or other individual who has been trained in handling live electrical components perform these tasks. Failure to follow all of the recommended safety warnings provided, could result in death or serious injury.

ReliaTel™ Control

The RTRM has the ability to provide the service personnel with some unit diagnostics and system status information.

Before turning the main power disconnect switch "Off", follow the steps below to check the ReliaTel Refrigeration Module (RTRM). All diagnostics & system status information stored in the RTRM will be lost when the main power is turned "Off".

⚠WARNING

Live Electrical Components!

During installation, testing, servicing and troubleshooting of this product, it may be necessary to work with live electrical components. Have a qualified licensed electrician or other individual who has been properly trained in handling live electrical components perform these tasks. Failure to follow all electrical safety precautions when exposed to live electrical components could result in death or serious injury.

To prevent injury or death from electrocution, it is the responsibility of the technician to recognize this hazard and use extreme care when performing service procedures with the electrical power energized.

1. Verify LED on face of the phase monitor is green. If LED is red, correct supply power fault.
2. Verify that the Liteport LED on the RTRM is burning continuously. If the LED is lit, go to Step 3.
3. If the LED is not lit, verify that 24 VAC is presence between J1-1 and J1-2. If 24 VAC is present, proceed to Step 4. If 24 VAC is not present, check the unit main power supply, check transformer (TNS1). Proceed to Step 4 if necessary.
4. Utilizing "Method 1" or "Method 2" in the "System Status Diagnostic" section, check the following:
   - System status
   - Heating status
   - Cooling status

   If a system failure is indicated, proceed to Step 5. If no failures are indicated, proceed to Step 6.
5. If a System failure is indicated, recheck Step 2 and Step 3. If the LED is not lit in Step 2, and 24 VAC is present in Step 3, the RTRM has failed. Replace the RTRM.
6. If no failures are indicated, use one of the TEST mode procedures described in the "Unit Start-Up" section to start the unit. This procedure will allow you to check all of the RTRM outputs, and all of the external controls (relays, contactors, etc.) that the RTRM outputs energize, for each respective mode. Proceed to Step 7.
7. Step the system through all of the available modes, and verify operation of all outputs, controls, and modes. If a problem in operation is noted in any mode, you may leave the system in that mode for up to one hour while troubleshooting. Refer to the sequence of operations for each mode, to assist in verifying proper operation. Make the necessary repairs and proceed to Step 8 and Step 9.
8. If no abnormal operating conditions appear in the test mode, exit the test mode by turning the power "Off" at the main power disconnect switch.
9. Refer to the individual component test procedures if other microelectronic components are suspect.

System Status Checkout Procedure

"System Status" is checked by using one of the following two methods:

Method 1

If the Zone Sensor Module (ZSM) is equipped with a remote panel with LED status indication, you can check the unit within the space. If the ZSM does not have LED's, use Method 2. BAYSENS110*, BAYSENS109*, BAYSENS119*, BAYSENS023A all have the remote panel indication feature. The LED descriptions are listed below.

Zone Sensor LED 1 (System)

"On" during normal operation.

"Off" if a system failure occurs or the LED fails.

"Flashing" indicates test mode.

Zone Sensor LED 2 (Heat)

"On" when the heat cycle is operating.

"Off" when the heat cycle terminates or the LED fails.

"Flashing" indicates a heating failure.

Zone Sensor LED 3 (Cool)

"On" when the cooling cycle is operating.

"Off" when the cooling cycle terminates or the LED fails.

"Flashing" indicates a cooling failure.

Zone Sensor LED 4 (Service)

"On" indicates a clogged filter.

"Off" during normal operation.

"Flashing" indicates an evaporator fan or condensate overflow switch failure.

Below is the complete listing of failure indication causes.

System failure

Check the voltage between terminals 6 and 9 on J6, it should read approximately 32 VDC. If no voltage is present, a system failure has occurred. Refer to Step 4 in the previous section for the recommended troubleshooting procedure.

Heating Failure

Verify Heat Failure by Ignition Module (IGN) LED indicator:

OFF: No Power or Failure

ON: Normal

Slow Flash: Normal, Heat Call

Fast Flash: Error Code:

1 Flash: Communication Failure

2 Flashes: System Lockout

3 Flashes: Pressure Switch Fail

4 Flashes: TC01 or TC02 Open

5 Flashes: Flame w/o Gas Valve

6 Flashes: Flame Rollout Open

Cooling Failure

- Cooling and heating set point (slide pot) on the zone sensor has failed. Refer to the "Zone Sensor Test Procedure" section.
- Zone temperature thermistor ZTEMP on ZTS failed. Refer to the "Zone Sensor Test Procedure" section.
- CC1 or CC2 24 VAC control circuit has opened, check CC1 & CC2 coils, and any of the controls below that apply to the unit (HPC1, HPC2).
- LPC1 has opened during the 3 minute minimum "on time" during 4 consecutive compressor starts, check LPC1 or LPC2 by testing voltage between the J1-1 & J3-2 terminals on the RTRM and ground. If 24 VAC is present, the LPC's has not tripped. If no voltage is present, LPC's has tripped.

Service Failure

- If the supply fan proving switch has closed, the unit will not operate (when connected to RTOM), check the fan motor, belts, and proving switch.
- Clogged filter switch has closed, check the filters.
- If the condensate overflow switch is closed, the unit will not operate. Make sure the float switch is not in a tripped condition, and check for an "open" between wires connecting to RTOM J6-1, J6-2 (ReliaTel™ controls).

Simultaneous Heat and Cool Failure

- Emergency Stop is activated

Method 2

The second method for determining system status is done by checking voltage readings at the RTRM (J6). The system indication descriptions and the approximate voltages are listed below.

System Failure

- Measure the voltage between terminals J6-9 & J6-6.
- Normal Operation = approximately 32 VDC
- System Failure = less than 1 VDC, approximately 0.75 VDC
- Test Mode = voltage alternates between 32 VDC & 0.75 VDC

Heat Failure

- Measure the voltage between terminals J6-7 & J6-6.
- Heat Operating = approximately 32 VDC
- Heat Off = less than 1 VDC, approximately 0.75 VDC
- Heating Failure = voltage alternates between 32 VDC & 0.75 VDC

Cool Failure

- Measure the voltage between terminals J6-8 & J6-6.
- Cool Operating = approximately 32 VDC
- Cool Off = less than 1 VDC, approximately 0.75 VDC
- Cooling Failure = voltage alternates between 32 VDC & 0.75 VDC

Service Failure

- Measure the voltage between terminals J6-10 & J6-6.
- Clogged Filter = Approximately 32 VDC.
- Normal = Less than 1 VDC, approximately 0.75 VDC Fan Failure = voltage alternates between 32 VDC & 0.75 VDC.

To use LED's for quick status information at the unit, purchase a BAYSENS110* ZSM and connect wires with alligator clamps to terminals 6 through 10. Connected each

respective terminal wire (6 through 10) from the Zone Sensor to the unit J6 terminals 6 through 10.

Note: *If the system is equipped with a programmable zone sensor, BAYSENS119* the LED indicators will not function while the BAYSENS110* is connected.*

Resetting Cooling and Ignition Lockouts

Cooling Failures and Ignition Lockouts are reset in an identical manner. Method 1 explains resetting the system from the space; Method 2 explains resetting the system at the unit.

Note: *Before resetting Cooling Failures and Ignition Lockouts check the Failure Status Diagnostics by the methods previously explained. Diagnostics will be lost when the power to the unit is disconnected.*

Method 1

To reset the system from the space, turn the "Mode" selection switch at the zone sensor to the "Off" position. After approximately 30 seconds, turn the "Mode" selection switch to the desired mode, i.e. Heat, Cool or Auto.

Method 2

To reset the system at the unit, cycle the unit power by turning the disconnect switch "Off" and then "On".

Lockouts can be cleared through the building management system. Refer to the building management system instructions for more information.

Zone Temperature Sensor (ZTS) Service Indicator

The ZSM SERVICE LED is a generic indicator, that will signal the closing of a Normally Open switch at any time, providing the Indoor Motor (IDM) is operating. This indicator is usually used to indicate a clogged filter, or an air side fan failure.

The RTRM will ignore the closing of this Normally Open switch for 2 (±1) minutes. This helps prevent nuisance SERVICE LED indications. The exception is the LED will flash 40 seconds after the fan is turned "On" if the Fan Proving Switch is not made.

Clogged Filter Switch

This LED will remain lit the entire time that the Normally Open switch is closed. The LED will be turned off immediately after resetting the switch (to the Normally Open position), or any time that the IDM is turned "Off".

If the switch remains closed, and the IDM is turned "On", the SERVICE LED will be turned "On" again after the 2 (±1) minute ignore delay.

This LED being turned "On", will have no other affect on unit operation. It is an indicator only.

Fan Failure Switch

When the "Fan Failure" switch is wired to the RTOM, the LED will remain flashing the entire time the fan proving switch is closed, indicating a fan failure, and it will shut the unit operations down.

Condensate Overflow Switch

When the "Condensate Overflow Switch" is closed, a drain pan overflow condition is indicated and it will shut unit operations down.

Zone Temperature Sensor (ZTS) Tests

Note: *These procedures are not for programmable or digital models and are conducted with the Zone Sensor Module electrically removed from the system.*

Test 1 - Zone Temperature Thermistor (ZTEMP)

This component is tested by measuring the resistance between terminals 1 and 2 on the Zone Temperature Sensor. Below are some typical indoor temperatures, and corresponding resistive values.

Test 2 - Cooling Set Point (CSP) and Heating Set Point (HSP)

Table 15. Cooling setpoint and heating setpoint

Zone Temperature		Nominal ZTEMP Resistance
50 F°	10.0 C°	19.9 K-Ohms
55 F°	12.8 C°	17.47 K-Ohms
60 F°	15.6 C°	15.3 K-Ohms
65 F°	18.3 C°	13.49 K-Ohms
70 F°	21.1 C°	11.9 K-Ohms
75 F°	23.9 C°	10.50 K-Ohms
80 F°	26.7 C°	9.3 K-Ohms
85 F°	29.4 C°	8.25 K-Ohms
90 F°	32.2 C°	7.3 K-Ohms

The resistance of these potentiometers are measured between the following ZSM terminals. Refer to the chart above for approximate resistances at the given setpoints.

Cool SP = Terminals 2 and 3

Range = 100 to 900 Ohms approximate

Heat SP = Terminals 2 and 5

Range = 100 to 900 Ohms approximate

Test 3 - System Mode and Fan Selection

The combined resistance of the Mode selection switch and the Fan selection switch can be measured between

terminals 2 and 4 on the Zone Sensor. The possible switch combinations are listed below with their corresponding resistance values.

Test 4 - LED Indicator Test, (SYS ON, HEAT, COOL & SERVICE)

Method 1

Testing the LED using a meter with diode test function. Test both forward and reverse bias. Forward bias should measure a voltage drop of 1.5 to 2.5 volts, depending on your meter. Reverse bias will show an Over Load, or open circuit indication if LED is functional.

Method 2

Testing the LED with an analog Ohmmeter. Connect Ohmmeter across LED in one direction, then reverse the leads for the opposite direction. The LED should have at least 100 times more resistance in reverse direction, as compared with the forward direction. If high resistance in both directions, LED is open. If low in both directions, LED is shorted.

Method 3

To test LED's with ZSM connected to unit, test voltages at LED terminals on ZSM. A measurement of 32 VDC, across an unlit LED, means the LED has failed.

Relative Humidity Sensor Test

This component is measured by measuring the mA output signal on the Relative Humidity Sensor. Verify accuracy of the sensor annually. If the output reading is 0 mA, first verify that power is applied to the sensor. A reading of 4 mA corresponds to 0% RH and 20 mA corresponds to 100% RH.

% RH	mA
30	8.8
40	10.4
50	12.0
60	13.6
70	15.2
80	16.8

Note: *Measurements should be made from LED common (ZSM terminal 6 to respective LED terminal).*

Programmable & Digital Zone Sensor Test

Testing serial communication voltage

1. Verify 24 VAC is present between terminals J6-14 & J6-11.
2. Disconnect wires from J6-11 and J6-12. Measure the voltage between J6-11 and J6-12, should be about 32 VDC.
3. Reconnect wires to terminals J6-11 and J6-12. Measure voltage again between J6-11 and J6-12, voltage should flash high and low every 0.5 seconds. The voltage on the low end will measure about 19 VDC, while the voltage on the high end will measure from approximately 24 to 38 VDC.
4. Verify all modes of operation, by running the unit through all of the steps in the "Test Modes" section discussed in "Unit Start-Up".
5. After verifying proper unit operation, exit the test mode. Turn the fan on continuously at the ZSM, by pressing the button with the fan symbol. If the fan comes on and runs continuously, the ZSM is good. If you are not able to turn the fan on, the ZSM is defective.

ReliaTel™ Refrigeration Module (RTRM) Default Chart

If the RTCI loses input from the building management system, the RTRM will control in the default mode after approximately 15 minutes. If the RTRM loses the Heating and Cooling setpoint input, the RTRM will control in the default mode instantaneously. The temperature sensing thermistor in the Zone Sensor Module is the only component required for the "Default Mode" to operate.

Unit Operation without a Zone Sensor

This procedure is for temporary operation only. The economizer and condenser fan cycling functions are disabled.

⚠WARNING

Hazardous Voltage!

Disconnect all electric power, including remote disconnects before servicing. Follow proper lockout/tagout procedures to ensure the power can not be inadvertently energized. Failure to disconnect power before servicing could result in death or serious injury.

1. Open and Lock the unit disconnect switch.
2. Remove the Outside Air Sensor (OAS) from the condenser section of unit.
3. Use two (2) wire nuts, to individually cap the wires.
4. Locate the RTRM (J6). Connect two (2) wires to terminals J6-1 and 2.
5. Connect the sensor (OAS) using two wire nuts to the two (2) field supplied wires that were connected to terminals 1 and 2 on J6.

Unit Economizer Control (ECA) Troubleshooting

ReliaTel™ Control

Verify Economizer Status by Economizer Actuator (ECA) LED indicator:

- OFF: No power or failure
- ON: Normal, OK to economize
- Slow Flash: Normal, not OK to economize
- Fast Flash - 1/2 second on / 2 seconds off:
  - Error Code: Communications failure
- Pulse Flash:2 seconds on / 1/2 second off:
  - Error Code:
    - 1 Flash: Actuator Fault
    - 2 Flashes: CO_2 Sensor
    - 3 Flashes: RA Humidity Sensor
    - 4 Flashes: RA Temp Sensor
    - 5 Flashes: OA Quality Sensor
    - 6 Flashes: OA Humidity Sensor
    - 7 Flashes: OA Temp Sensor
    - 8 Flashes: MA Temp Sensor
    - 9 Flashes: RAM Fault
    - 10 Flashes: ROM Fault
    - 11 Flashes: EEPROM Fault

Electromechanical Control

The IGN has the ability to provide the service personnel with some unit diagnostics and system status information.

Before turning the main power disconnect switch "Off", follow the steps below to check the Ignition Module (IGN).

⚠WARNING

Live Electrical Components!

During installation, testing, servicing and troubleshooting of this product, it may be necessary to work with live electrical components. Have a qualified licensed electrician or other individual who has been properly trained in handling live electrical components perform these tasks. Failure to follow all electrical safety precautions when exposed to live electrical components could result in death or serious injury.

To prevent injury or death from electrocution, it is the responsibility of the technician to recognize this hazard and use extreme care when performing service procedures with the electrical power energized.

1. Verify LED on face of the phase monitor is green. If LED is red, correct supply power fault.
2. Verify that the LED on the IGN is burning continuously. If the LED is lit, go to Step 4.
3. If the LED is not lit, verify that 24 VAC is present between R and B. If the LED is not lit and 24 VAC is present replace the IGN. If 24 VAC is not present, check transformer (TNS1). Proceed to Step 4 if necessary.
4. If no failures are indicated, use the TEST mode procedures described in the "Unit Start-Up" section or thermostat to start the unit. This procedure will allow you to check all of the external controls (relays, contactors, etc) and the IGN.
5. Test the system through all of the available modes, and verify operation of all outputs, controls, and modes. Refer to the sequence of operations for each mode, to assist in verifying proper operation. Make the necessary repairs and proceed to Step 6 and Step 7.
6. If no abnormal operating conditions appear in the test mode, exit the test mode by turning the power "Off" at the main power disconnect switch and removing the test mode connections.
7. Refer to the individual component test procedures if other components are suspect.

Heating Failure

Verify Heat Failure by Ignition Module (IGN) LED indicator:

- OFF: No Power or Failure
- ON: Normal
- Slow Flash: Normal, Heat Call
- Fast Flash: Error Code:

  1 Flash: No Communication

  2 Flashes: System Lockout

  3 Flashes: Pressure Switch Fail

  4 Flashes: TC01 or TC02 Open

  5 Flashes: Flame w/o Gas Valve

  6 Flashes: Flame Rollout Open

Cooling Failure

- Cooling and heating set point (slide pot) on the thermostat has failed.
- CC1 or CC2 24 VAC control circuit has opened, check CC1 & CC2 coils, and any of the controls below that apply to the unit (HPC1, HPC2, LPC1, LPC2, Frostat™).

Resetting Cooling and Ignition Lockouts

Cooling Failures and Ignition Lockouts are reset in an identical manner. Method 1 explains resetting the system from the space; Method 2 explains resetting the system at the unit.

Method 1

To reset the system from the space, turn the "Mode" selection switch at the thermostat to the "Off" position.

After approximately 30 seconds, turn the “Mode” selection switch to the desired mode, i.e. Heat, Cool or Auto.

Method 2

To reset the system at the unit, cycle the unit power by turning the disconnect switch “Off” and then “On”.

Table 16. Fault detection and diagnostic codes

	Primary Fault Codes								Information Code		
Failures	**Mixed Air Temp Sensor Fail**	**Outdoor Temp Sensor Fail**	**Economizer Actuator Fault**	**RTEM Comm Fail**	**Pressure Dead band Fail (If Used)**	**Temp Sensor Fail (If Used)**	**Airflow Sensor Fail (If Used)**	**Space Press Dead band Fail (If Used)**	**Unit Fails to Economize**	**Unit Economizing When It Should Not**	**Damper Position % Indicated**
Damper stuck at Minimum			X		X(a)		X(a)*	X(a)	X		X
Damper Stuck Open			X		X(a)		X(a)	X(a)		X	X
Mixed Sensor Failure	X										X
Supply Air Sensor Failure						X					X
Outdoor Air Temperature Fail		X									X
Power loss to RTEM				X							
Failed or Power Loss to Actuator			X								X
Mechanical Failure of Actuator							X				

(a) If goes out of range.

Table 17. Low leak economizer sensor values

Sensor Values Data					
Temp °F	**Resistance (K ohms)**	**Temp °F**	**Resistance (K ohms)**	**Temp °F**	**Resistance (K ohms)**
40	26.097	54	17.847	68	12.435
41	25.383	55	17.382	69	12.126
42	24.690	56	16.930	70	11.827
43	24.018	57	16.491	71	11.535
44	23.367	58	16.066	72	11.252
45	22.736	59	15.654	73	10.977
46	22.132	60	15.253	74	10.709
47	21.530	61	14.864	75	10.448
48	20.953	62	14.486	76	10.194
49	20.396	63	14.119	77	9.949
50	19.854	64	13.762	78	9.710
51	19.330	65	13.416	79	9.477
52	18.821	66	13.078	80	9.250
53	18.327	67	12.752	81	9.030

Unit Economizer Control (ECA) Test Procedures

Electromechanical Control

This series of tests will allow you to diagnose, and determine where, and if a problem exists in the system economizer operation. Test 1 determines if the problem is in the Unit, or if it is in the ECA. Test 2 tests sensor inputs. Test 3 tests the resistors and sensors. Conduct the tests in numerical order until problem is found.

Test 1

Verifying that the economizer actuator (ECA) is functional:

1. Using the "Test Mode" described in the "System Start-Up" section, put the unit into the economizer mode and verify that the economizer actuator (ECA) drives fully open (approximately 90 seconds).
2. If the ECA is not driving the dampers, verify that 24 VAC is between the ECA terminals TR and TR1 is present. If 24 volts is not present, a wiring or terminal problem exists from the control transformer. Make any necessary repairs, see wiring diagrams to troubleshoot.
3. If 24 VAC is present, adjust the minimum position potentiometer fully clockwise. If the actuator does not drive, the economizer actuator is bad. Replace the ECA.

Test 2

Testing the ECA resistors and sensors

1. Testing the Mixed Air Sensor (MAS). Disconnect the wires connected to T and T1 on the ECA, and;
   a. Measure the resistance of the sensor between the wires 180B and 181B.
   b. Measure the temperature at the MAS location. Using the Temperature versus Resistance chart, verify the accuracy of the MAS.

   Replace the sensor if it is out of range.
2. Testing the Outdoor Air Switch. If the temperature is above 60 degrees, it will need to be chilled. Measure the resistance of the sensor on the ECA SO and +.

   The resistance should be approximately 390 Ohms.

   Replace the Switch if it is open.

   Replace the ECA if it is out of range.
3. Testing the R1 Resistance.

   Measure the resistance of the sensor on the ECA SR and +.

   The resistance should be approximately 420 Ohms.

   Replace the ECA if it is out of range.
4. Testing the R2 Resistance.

   Measure the resistance of the sensor on the ECA P and P1.

   The resistance should be approximately 130 Ohms.

   Replace the ECA if it is out of range.

Troubleshooting procedures for Direct Drive Plenum Fan

Prior to troubleshooting, verify all wiring and wiring connections. The motor has internal protections that will shut down the motor before damage occurs. A power cycle is required to reset some of the internal protections. Before proceeding, power down unit for 1 minute and then power on.

Please follow steps sequentially unless directed differently in solution.

Refer to RT-SVB90*-EN for a Comprehensive Troubleshooting Guide.

Unit Wiring Diagrams Numbers

Note: *Wiring diagrams can be accessed using e-Library by entering the diagram number in the literature order number search field or by contacting technical support.*

Table 18. Unit wiring diagram numbers

Schematic Type			Drawing Number	Description
Control	ReliaTel™	230,460,575V	4366-7217	YHC(037-067)
			4366-4571	Y(S,H)C(036,048)E/F (1,3 Phase) and YHC060F (1-Phase), ReliaTel Controls, X13 IDM
			4366-1015	Y(S,H)C(036-090)E/F, ReliaTel Controls, Belt-Drive IDM
			4366-4703	YSC060E (1,3 Phase) and YHC060E/F (3-Phase), ReliaTel Controls, X13 IDM
			4366-1042	YSC(092,102)F, ReliaTel Controls
			4366-7436	(YHC092-102,YSC120)F, ReliaTel Controls
			4366-7430	YHC120E, ReliaTel Controls
	Electromechanical		4366-8386	Y(S,H)C(036,048)E/F (1,3 Phase) and YHC060F (1-Phase), Electromechanical Controls, X13 IDM
			4366-8383	Y(S,H)C(036-060)E/F, Electromechanical Controls, Belt-Drive IDM
			4366-8387	YSC060E (1,3 Phase) and YHC060E/F (3-Phase), Electromechanical Controls, X13 IDM
			4366-8385	Y(S,H)C(072,090)F, Electromechanical Controls
			4366-8384	YSC(092,102)F, Electromechanical Controls
			4366-8388	(YHC092-102,YSC120)F, Electromechanical Controls
			4366-8395	YHC120E, Electromechanical Controls

Schematic Type			Drawing Number	Description
Power	ReliaTel™	230V	4366-7179	YHC(037-067) (230V)
			4366-4576	Y(S,H)C(036-060)E/F (1-Phase)
			4366-5163	YHC(036-060)E/F (230V 3-Phase), X13 IDM
			4366-1016	Y(S,H)C(036-090)E/F (230V 3-Phase), Belt-Drive IDM
			4366-1033	YSC(092,102)F (230V)
			4366-7437	(YHC092-102, YSC120)F (230V), ReliaTel Controls
			4366-7430	YHC120E, ReliaTel Controls
		460V and/or 575V	4366-7180	YHC(037-067) (460V)
			4366-5164	YHC(036-060)E/F (460V), X13 IDM
			4366-1005	Y(S,H)C(036-090)E/F (460V,575V), Belt-Drive IDM
			4366-1034	YSC(092,102)F (460V,575V)
			4366-7438	(YHC092-102, YSC120)F (460V), ReliaTel Controls
			4366-7439	YSC120F (575V), ReliaTel Controls
			4366-7430	YHC120E, ReliaTel Controls
	Electromechanical	230V	4366-6406	YHC(092-120)E, Electromechanical Controls
			4366-6449	YHC(092-102)F, YSC120F, Electromechanical Controls
		460V and/or 575V	4366-6406	YHC120E, Electromechanical Controls
			4366-6436	YHC(092-102)F4, Electromechanical Controls
			4366-6782	YSC(120)FW, Electromechanical Controls
Schematic Type			**Drawing Number**	**Description**
Connection	ReliaTel™	230V	4366-7340	YHC(037) (230V)
			4366-8247	YHC037E (230V), 17 Plus with Multi-Zone VAV
			4366-7342	YHC(047-067) (230V)
			4366-8249	YHC(047, 067)E (230V), 17 Plus with Multi-Zone VAV
			4366-4564	Y(S,H)C(036,048)E/F, YHC060F (1-Phase), ReliaTel Controls
			4366-5185	YHC(036,048)E/F (230V 3-Phase), ReliaTel Controls, X13 IDM
			4366-1522	Y(S,H)C(036-060)E/F (230V 3-Phase), ReliaTel Controls, Belt-Drive IDM
			4366-4705	YSC060E (1-Phase), ReliaTel Controls

Table 18. Unit wiring diagram numbers (continued)

Connection	ReliaTel™	230V	4366-5186	YHC060E/F (230V 3-Phase), ReliaTel Controls, X13 IDM
			4366-1539	Y(S,H)C(072,090)F (230V), ReliaTel Controls
			4366-7449	YHC120E (3-Phase), ReliaTel Controls
			4366-8254	YHC(092-120)E ReliaTel Controls, with Multi-Zone VAV
			4366-1530	YSC(092,102)F (230V), ReliaTel Controls
			4366-7451	(YSC120,YHC092-102)F (230V), ReliaTel Controls
			4366-8255	YHC(092-102)F, YSC120F (230V), ReliaTel Controls with Multi-Zone VAV
		460V and/or 575V	4366-8254	YHC(092-120)E ReliaTel Controls, with Multi-Zone VAV
			4366-7341	YHC(037) (460V)
			4366-8248	YHC037E (460V), 17 Plus with Multi-Zone VAV
			4366-7343	YHC(047-067) (460V)
			4366-8250	YHC(047,067)E (460V), 17 Plus with Multi-Zone VAV
			4366-5202	YHC(036,048)E/F (460V), ReliaTel Controls, X13 IDM
			4366-1516	Y(S,H)C(036-060)F (460V,575V), ReliaTel Controls, Belt-Drive IDM
			4366-5203	YHC060E/F (460V), ReliaTel Controls, X13 IDM
			4366-1540	Y(S,H)C(072,090)F (460V,575V), ReliaTel Controls
			4366-1532	YSC(092,102)F (460V,575V), ReliaTel Controls
			4366-7454	(YSC120,YHC092-102)F (460V), ReliaTel Controls
			4366-8256	YHC(092-102)F, YSC120F (460V), ReliaTel Controls with Multi-Zone VAV
			4366-7456	YSC120F (575V), ReliaTel Controls
			4366-8257	YSC120F (575V), ReliaTel Controls with Multi-Zone VAV
	Electromechanical	230V	4366-8390	Y(S,H)C(036,048)E/F, YHC060F (1-Phase), Electromechanical Controls
			4366-8392	YHC(036,048)E/F (230V 3-Phase), Electromechanical Controls, X13 IDM
			4366-8404	Y(S,H)C(036-060)E/F (230V 3-Phase), Electromechanical Controls, Belt-Drive IDM
			4366-8391	YSC060E (1-Phase), Electromechanical Controls
			4366-8393	YHC060E/F (230V 3-Phase), Electromechanical Controls, X13 IDM
			4366-8408	Y(S,H)C(072,090)F (230V), Electromechanical Controls
			4366-8403	YHC120E (3-Phase), Electromechanical Controls
			4366-8406	YSC(092,102)F (230V), Electromechanical Controls
			4366-8400	(YSC120,YHC092-102)F (230V), Electromechanical Controls
		460V and/or 575V	4366-8394	YHC(036,048)E/F (460V), Electromechanical Controls, X13 IDM
			4366-8405	Y(S,H)C(036-060)E/F (460V,575V), Electromechanical Controls, Belt-Drive IDM
			4366-8399	YHC060E/F (460V), Electromechanical Controls, X13 IDM
			4366-8389	Y(S,H)C(072,090)F (460V,575V), Electromechanical Controls
			4366-8407	YSC(092,102)F (460V,575V), Electromechanical Controls
			4366-8401	(YSC120,YHC092-102)F (460V), Electromechanical Controls
			4366-8402	YSC120F (575V), Electromechanical Controls

Limited Warranty

Combination Gas Electric Air Conditioner

YCC, YCD, YCH, YCP, YSC and YHC (Parts Only)

Models Less Than 20 Tons for Residential Use*

This limited warranty is extended by Trane to the original purchaser and to any succeeding owner of the real property to which the Combination Gas Electric Air Conditioner is originally affixed, and applies to products purchased and retained for use within the U.S.A. and Canada.

If any part of your Combination Gas Electric Air Conditioner fails because of a manufacturing defect within five years from the date of the original purchase, Warrantor will furnish without charge the required replacement part. Any local transportation, related service labor, diagnosis calls, air filters, refrigerant and related items are not included.

If the sealed motor-compressor fails because of a manufacturing defect within five years from the date of original purchase, Warrantor will furnish without charge the required replacement compressor. Any local transportation, related service labor, diagnosis calls, refrigerant and related items are not included.

In addition, if the optional, factory installed, stainless steel heat exchanger fails because of a manufacturing defect within ten years from the date of start-up, Warrantor will furnish without charge a replacement heat exchanger. Any local transportation, related service labor and diagnosis calls are not included.

This limited warranty does not cover failure of your combination gas electric air conditioner if it is damaged while in your possession, failure attributable or caused by unreasonable use of the combination gas electric air conditioner and/or failure to properly maintain the combination gas electric air conditioner as set forth in the Use and Care manual.

This limited warranty applies to product installed on or after 10/1/2001 where product is manufactured after 1/1/2000. This limited warranty is not retroactive to any installations prior to 10/1/2001 or on product produced prior to 2000.

THE LIMITED WARRANTY AND LIABILITY SET FORTH HEREIN ARE IN LIEU OF ALL OTHER WARRANTIES AND LIABILITIES, WHETHER IN CONTRACT OR IN NEGLIGENCE, EXPRESS OR IMPLIED, IN LAW OR IN FACT, INCLUDING IMPLIED WARRANTIES OF MERCHANTABILITY AND FITNESS FOR PARTICULAR USE, AND IN NO EVENT SHALL WARRANTOR BE LIABLE FOR ANY INCIDENTAL OR CONSEQUENTIAL DAMAGES.

Some states do not allow limitations on how long an implied limited warranty lasts or do not allow the exclusion or limitation of incidental or consequential damages, so the above limitation or exclusion may not apply to you. This limited warranty gives you specific legal rights, and you may also have other rights which vary from state to state.

Parts will be provided by our factory organization through an authorized service organization in your area listed in the yellow pages. If you wish further help or information concerning this limited warranty, contact:

Trane

2701 Wilma Rudolph Blvd.

Clarksville, TN 37040-1008

Attention: Manager, Product Service

GW-618-4001

* This limited warranty is for residential usage of this equipment and not applicable when this equipment is used for a commercial application. A commercial use is any application where the end purchaser uses the product for other than personal, family or household purposes.

Combination Gas Electric Air Conditioner

YCZ, YCY, YCX, YCC, YCD, YCH, YCP, YHC and YSC (Parts Only)

Models Less Than 20 Tons for Commercial Use*

This warranty is extended by Trane to the original purchaser and to any succeeding owner of the real property to which the Combination Gas Electric Air Conditioner is originally affixed, and applies to products purchased and retained for use within the U.S.A. and Canada. There is no warranty against corrosion, erosion or deterioration.

If any part of your Combination Gas Electric Air Conditioner fails because of a manufacturing defect within one year from the date of the original purchase, Warrantor will furnish without charge the required replacement part.

In addition, if the sealed motor-compressor fails because of a manufacturing defect within the second through fifth year from the date of original purchase, Warrantor will furnish without charge the required replacement compressor.

In addition, if the optional, factory installed, stainless steel heat exchanger fails because of a manufacturing defect within ten years from the date of start-up, Warrantor will furnish without charge a replacement heat exchanger. Any local transportation, related service labor and diagnosis calls are not included.

Limited Warranty

Warrantor's obligations and liabilities under this warranty are limited to furnishing F.O.B. Warrantor factory or warehouse at Warrantor designated shipping point, freight allowed to Buyer's city, replacement parts for Warrantor's products covered under this warranty. Warrantor shall not be obligated to pay for the cost of lost refrigerant. No liability shall attach to Warrantor until products have been paid for and then liability shall be limited solely to the purchase price of the equipment under warranty shown to be defective.

THE WARRANTY AND LIABILITY SET FORTH HEREIN ARE IN LIEU OF ALL OTHER WARRANTIES AND LIABILITIES, WHETHER IN CONTRACT OR IN NEGLIGENCE, EXPRESS OR IMPLIED, IN LAW OR IN FACT, INCLUDING IMPLIED WARRANTIES OF MERCHANTABILITY AND FITNESS FOR PARTICULAR USE, AND IN NO EVENT SHALL WARRANTOR BE LIABLE FOR ANY INCIDENTAL OR CONSEQUENTIAL DAMAGES.

Some states do not allow limitations on how long an implied warranty lasts or do not allow the exclusion or limitation of incidental or consequential damages, so the above limitation or exclusion may not apply to you. This warranty gives you specific legal rights, and you may also have other rights which vary from state to state.

Trane

2701 Wilma Rudolph Blvd.

Clarksville, TN 37040-1008

Attention: Manager, Product Service

GW-606-4800

*This warranty is for commercial usage of said equipment and not applicable when the equipment is used for a residential application. Commercial use is any application where the end purchaser uses the product for other than personal, family or household purposes.

**A 5 year limited warranty is provided for the optional "Low Leak" economizer when combined with the additional FDD (Fault Detection & Diagnostics) option.

The manufacturer optimizes the performance of homes and buildings around the world. A business of Ingersoll Rand, the leader in creating and sustaining safe, comfortable and energy efficient environments,the manufacturer offers a broad portfolio of advanced controls and HVAC systems, comprehensive building services, and parts. For more information, visit www.IRCO.com.

The manufacturer has a policy of continuous product and product data improvement and reserves the right to change design and specifications without notice.

© 2014Trane All rights reserved
RT-SVX21Q-EN 17 Dec 2014
Supersedes RT-SVX21P-EN (11 July 2014)

We are committed to using environmentally conscious print practices that reduce waste.