Installation, Operation, and Maintenance

Gas Unit Heater

Indoor Gas-Fired Duct Furnace



⚠SAFETY WARNING

Only qualified personnel should install and service the equipment. The installation, starting up, and servicing of heating, ventilating, and air-conditioning equipment can be hazardous and requires specific knowledge and training. Improperly installed, adjusted or altered equipment by an unqualified person could result in death or serious injury. When working on the equipment, observe all precautions in the literature and on the tags, stickers, and labels that are attached to the equipment.

March 2012

GLND-SVX01B-EN

Warnings, Cautions and Notices

Warnings, Cautions and Notices. Note that warnings, cautions and notices appear at appropriate intervals throughout this manual. Warnings are provide to alert installing contractors to potential hazards that could result in death or personal injury. Cautions are designed to alert personnel to hazardous situations that could result in personal injury, while notices indicate a situation that could result in equipment or property-damage-only accidents.

Your personal safety and the proper operation of this machine depend upon the strict observance of these precautions.

Read this manual thoroughly before operating or servicing this unit.

ATTENTION: Warnings, Cautions and Notices appear at appropriate sections throughout this literature. Read these carefully:

⚠WARNING Indicates a potentially hazardous situation which, if not avoided, could result in death or serious injury.

⚠CAUTION Indicates a potentially hazardous situation which, if not avoided, could result in minor or moderate injury. It could also be used to alert against unsafe practices.

NOTICE: Indicates a situation that could result in equipment or property-damage only

Important Environmental Concerns!

Scientific research has shown that certain man-made chemicals can affect the earth's naturally occurring stratospheric ozone layer when released to the atmosphere. In particular, several of the identified chemicals that may affect the ozone layer are refrigerants that contain Chlorine, Fluorine and Carbon (CFCs) and those containing Hydrogen, Chlorine, Fluorine and Carbon (HCFCs). Not all refrigerants containing these compounds have the same potential impact to the environment. Trane advocates the responsible handling of all refrigerants-including industry replacements for CFCs such as HCFCs and HFCs.

Responsible Refrigerant Practices!

Trane believes that responsible refrigerant practices are important to the environment, our customers, and the air conditioning industry. All technicians who handle refrigerants must be certified. The Federal Clean Air Act (Section 608) sets forth the requirements for handling, reclaiming, recovering and recycling of certain refrigerants and the equipment that is used in these service procedures. In addition, some states or municipalities may have additional requirements that must also be adhered to for responsible management of refrigerants. Know the applicable laws and follow them.

⚠WARNING

Proper Field Wiring and Grounding Required!

All field wiring MUST be performed by qualified personnel. Improperly installed and grounded field wiring poses FIRE and ELECTROCUTION hazards. To avoid these hazards, you MUST follow requirements for field wiring installation and grounding as described in NEC and your local/state electrical codes. Failure to follow code could result in death or serious injury.

⚠WARNING

Personal Protective Equipment (PPE) Required!

Installing/servicing this unit could result in exposure to electrical, mechanical and chemical hazards.

- **Before installing/servicing this unit, technicians MUST put on all Personal Protective Equipment (PPE) recommended for the work being undertaken. ALWAYS refer to appropriate MSDS sheets and OSHA guidelines for proper PPE.**
- **When working with or around hazardous chemicals, ALWAYS refer to the appropriate MSDS sheets and OSHA guidelines for information on allowable personal exposure levels, proper respiratory protection and handling recommendations.**
- **If there is a risk of arc or flash, technicians MUST put on all Personal Protective Equipment (PPE) in accordance with NFPA 70E or other country-specific requirements for arc flash protection, PRIOR to servicing the unit.**

Failure to follow recommendations could result in death or serious injury.

ATTENTION: READ THIS MANUAL AND ALL LABELS ATTACHED TO THE UNIT CAREFULLY BEFORE ATTEMPTING TO INSTALL, OPERATE OR SERVICE THESE UNITS! CHECK UNIT DATA PLATE FOR TYPE OF GAS AND ELECTRICAL SPECIFICATIONS AND MAKE CERTAIN THAT THESE AGREE WITH THOSE AT POINT OF INSTALLATION. RECORD THE UNIT MODEL AND SERIAL No.(s) IN THE SPACE PROVIDED. RETAIN FOR FUTURE REFERENCE.

© 2012 Trane All rights reserved

⚠WARNING

Hazardous Service Procedures!

The maintenance and troubleshooting procedures recommended in this manual could result in exposure to electrical, mechanical or other potential safety hazards. Always refer to the safety warnings provided throughout this manual concerning these procedures. When possible, disconnect all electrical power including remote disconnect and discharge all energy storing devices such as capacitors before servicing. Follow proper lockout/tagout procedures to ensure the power can not be inadvertently energized. When necessary to work with live electrical components, have a qualified licensed electrician or other individual who has been trained in handling live electrical components perform these tasks. Failure to follow all of the recommended safety warnings provided, could result in death or serious injury.

⚠WARNING

Overheating or Flooding Could Cause Fire or Explosion!

Overheating or flooding (where any part of the duct furnace has been under water) could result in fire or explosion. Should overheating occur, or the gas supply fails to shut off, shut off the manual gas valve to the duct furnace before shutting off the electrical supply. Do not use the duct furnace if any part has been under water. Immediately call a qualified service technician to inspect the duct furnace and replace any gas control which has been underwater. Failure to follow these recommendations could result in death or serious injury.

⚠WARNING

Hazardous Gases and Flammable Vapors!

Exposure to hazardous gases from fuel substances have been shown to cause cancer, birth defects or other reproductive harm. Improper installation, adjustment, alteration, service or use of this product could cause flammable mixtures. To avoid hazardous gases and flammable vapors follow proper installation and set up of this product and all warnings as provided in this manual. Failure to follow all instructions could result in death or serious injury.

Trademarks

Trane and the Trane logo are trademarks of Trane in the United States and other countries. All trademarks referenced in this document are the trademarks of their respective owners.

Dow Corning is a registered trademark of Dow Corning Corporation.

Introduction

⚠WARNING

Safety Alert!

You MUST follow all recommendations below. Failure to do so could result in death or serious injury.

For Your Safety

The use and storage of gasoline or other flammable vapors and liquids in open containers in the vicinity of this appliance is hazardous.

If you smell gas:

1. **Open windows.**
2. **Do not touch electrical switches.**
3. **Extinguish any open flame.**
4. **Immediately call your gas supplier from a neighbor's phone. Follow the gas supplier's instructions.**

Approved For Use in California When Equipped With Spark Ignition

⚠WARNING

Toxic Hazard!

Install, operate and maintain unit in accordance with manufacturer's instructions to avoid exposure to fuel substances or substances from incomplete combustion which could result in death or serious illness. The state of California has determined that these substances may cause cancer, birth defects, or other reproductive harm.

Installer's Responsibility

Installer Please Note: This equipment has been test fired and inspected. It has been shipped free from defects from our factory. However, during shipment and installation, problems such as loose wires, leaks, or loose fasteners may occur. It is the installer's responsibility to inspect and correct any problems that may be found.

Receiving Instructions

Inspect shipment immediately when received to determine if any damage has occurred to the unit during shipment. After the unit has been uncrated, check for any visible damage to the unit. If any damage is found, the consignee should sign the bill of lading indicating such damage and immediately file claim for damage with the transportation company.

Important: *It is the equipment owner's responsibility to provide any scaffolding or other apparatus required to perform emergency service or annual/periodic maintenance to this equipment.*

Table of Contents

Warnings, Cautions and Notices 2
Model Number Descriptions 6
Indoor Gas Heating Units 6
Horizontal Blower Assembly 6
General Information 7
Description 7
General Safety Information 7
Identification of Parts 8
Unit Dimensions and Weights 9
Installation: Mechanical 11
Clearances 12
Air Flow 13
Combustion Inlet Air Ventilation 13
Suspension 13
Nozzle Assembly 14
Installation: Piping 16
Gas Piping 16
Pipe Sizing 16
Pipe Installation 17
Installation: Venting 18
Venting for Power Vented (Category III) Duct Furnaces 19
Installation: Electrical 25
Electrical Connections 25
Thermostat Wiring and Location 25
Start-Up 27
Operation 27
Power Vented Duct Furnaces with Intermittent (Spark) Pilot Ignition 27
Gas Equipment Start-Up 32
Maintenance 33
Periodic Service 33
Installation Instructions for Field Replacement of Power Venter Motor 36
How to Order Replacement Parts 37
Diagnostics 38
Troubleshooting 38
Wiring Diagrams 42

Model Number Descriptions

Indoor Gas Heating Units

Note: *All units are AGA approved. For CGA approved units, contact Air Handling Product Support.*

Digit 1 — Gas Heating Equipment

G = Gas Heating Equipment

Digit 2 — Product Type

L = High Efficiency Indoor Duct Furnace

Digit 3 — Fuel

N = Natural Gas
P = LP Gas (Propane)

Digit 4 — Development Sequence

D = Fourth Generation

Digits 5, 6, 7 — Input Capacity

Single Furnace

003 =	30 MBh	015 =	150 MBh
004 =	45 MBh	017 =	175 MBh
006 =	60 MBh	020 =	200 MBh
007 =	75 MBh	022 =	225 MBh
009 =	90 MBh	025 =	250 MBh
010 =	100 MBh	030 =	300 MBh
012 =	125 MBh	035 =	350 MBh
		040 =	400 MBh

Digit 8 — Main Power Supply

A =	115/60/1	D =	230/60/3
B =	230/60/1	E =	460/60/3
C =	208/60/3	F =	575/60/3

Digit 9 — Gas Control Option

D = Single-Stage, Intermittent Pilot Ignition
E = Two-Stage, Intermittent Pilot Ignition
H = Electronic Modulating with Room T-Stat, Intermittent Pilot Ignition
J = Electronic Modulating with Duct-Stat, Intermittent Pilot Ignition
L = Electronic Modulating with External 4–20 mA Input
N = Electronic Modulating with External 0–10 Vdc Input
T = Single Stage Direct Spark Ignition
V = Two-Stage, Direct Spark Ignition

Digit 10 — Design Sequence

G = Seventh Design

Digit 11 — Heat Exchanger Material

1 = Aluminized Steel
3 = #321 Stainless Steel

Digit 12 — Rooftop Arrangements

0 = None (Indoor Unit)

Digit 13 — Rooftop Heating Unit Motor Selection

0 = None (Indoor Unit and Rooftop Duct Furnace)

Digit 14 — Rooftop Fan Section

0 = None (Indoor Unit and Rooftop Duct Furnace)

Digit 15 — Miscellaneous Options

0 = None
A = #409 Stainless Steel Burners
B = Orifices For Elevation Above 2000 Feet (Specify Elevation)
C = #409 Stainless Steel Draft Diverter
D = Summer-Winter Switch
F = Horizontal Louvers
G = Horizontal and Vertical Louvers
K = Side Access Burner Drawer (Left Hand)[1]
L = Fan Time Delay Control
M = Side Access Burner Drawer (Right Hand)[1]

[1] The left or right hand side of the side access burner drawer, options K & M, is determined by facing the air outlet side of the duct furnace.

Horizontal Blower Assembly

Digit 1, 2, 3 — Horizontal Blower Assembly

Digit 4 — Development Sequence

C = Third Generation

Digit 5, 6 — Blower Size

15 = Nominal 1500 cfm
20 = Nominal 2000 cfm
30 = Nominal 3000 cfm
45 = Nominal 4500 cfm

Digit 7 — Transition Size

(Specifies Duct Furnace Size)

0 =	None		
A =	100 MBh	F =	225 MBh
B =	125 MBh	G =	250 MBh
C =	150 MBh	H =	300 MBh
D =	175 MBh	J =	350 MBh
E =	200 MBh	K =	400 MBh

Digit 8 — Main Power Supply

A =	115/60/1	D =	230/60/3
B =	230/60/1	E =	460/60/3
C =	208/60/3		

Digit 9 — Motor Horsepower

A =	1/3 hp	D =	1 hp
B =	1/2 hp	E =	1-1/2 hp
C =	3/4 hp	F =	2 hp

Digit 10 — Design Sequence

D = Fourth Design

Digit 11 — Miscellaneous Options

0 = None
1 = Insulation
3 = Totally Enclosed Motor

General Information

Description

The duct furnace design is certified by ETL for use with natural and LP (propane) gases. ANSI and NFPA Standards as well as Canadian installation codes referred to in this manual are the ones that were applicable at the time that the design was certified. In addition, the duct furnace may be installed on the downstream side of a cooling unit, without need of a bypass duct.

If the unit is to be installed at an altitude exceeding 2,000 feet (610 m) above sea level, derate the input by 4 percent for each 1,000 foot (305 m) rise above sea level. Special orifices are required for installations above 2,000 feet (610 m).

When units are installed in Canada, any reference to derations at altitudes in excess of 2000 feet (610 m) are to be ignored. At altitudes of 2000 to 4500 feet (610 to 1372 m), the units must be orificed to 90 percent of the normal altitude rating, and be so marked in accordance with the ETL certification.

General Safety Information

Important: *This product must be installed by a licensed plumber or gas fitter when installed within the Commonwealth of Massachusetts.*

⚠WARNING

Safety Alert!

You MUST follow all recommendations below. Failure to do so could result in death or serious injury.

- **Installation must be made in accordance with local codes, or in absence of local codes with the latest edition of ANSI Standard Z223.1 (N.F.P.A. No. 54) National Fuel Gas Code.**

  All of the ANSI and NFPA Standards referred to in these installation instructions are those that were applicable at the time the design of this appliance was certified. The ANSI Standards are available from the CSA Information Services, 1-800-463-6727. The NFPA Standards are available from the National Fire Protection Association, Batterymarch Park, Quincy, MA 02269. These duct furnaces are designed for use in airplane hangars when installed in accordance with current ANSI/NFPA No. 409 and in public garages when installed in accordance with current NFPA No. 88A and NFPA No. 88B.

  If installed in Canada, the installation must conform with local building codes, or in absence of local building codes, with CSA-B149.1 "Installation Codes for Natural Gas Burning Appliances and Equipment" or CSA-B149.2 "Installation Codes for Propane Gas Burning Appliances and Equipment". These indoor duct furnaces have been designed and certified to comply with CSA 2.6. Also see sections on installation in "Aircraft Hangers," p. 11 and "Public Garages," p. 11.

- **Do not alter the duct furnace in any way or damage to the unit and/or severe personal injury or death could occur!**
- **Turn off the gas supply and disconnect all electric power, including remote disconnects before servicing unit. Follow proper lockout/tagout procedures to ensure the power can not be inadvertently energized and the gas can not be inadvertently turned on. Failure to turn off gas or disconnect power before servicing could result in death or serious injury.**
- **Follow installation instructions CAREFULLY to avoid creating unsafe conditions. All wiring should be done and checked by a qualified electrician, using copper wire only. All external wiring must conform to applicable local codes and to the latest edition of the National Electrical Code ANSI/NFPA No. 70.**
- **All gas connections should be made and leak-tested by a suitably qualified individual, per instructions in this manual. Also follow procedures listed in "Gas Equipment Start-Up," p. 32.**
- **Use only the fuel for which the duct furnace is designed (see rating plate). Using LP gas in a heater that requires natural gas, or vice versa, will create the risk of gas leaks, carbon monoxide poisoning and explosion.**

Important: ***Do not attempt to convert the furnace for use with a fuel other than the one intended. Such conversion is dangerous, as it could create the risks listed previously.***

- **Make certain that the power source conforms to the electrical requirements of the furnace.**
- **All field-installed wiring must be completed by qualified personnel. All field-installed wiring must comply with NEC and applicable local codes. Failure to follow this instruction could result in death or serious injuries.**
- **Special attention must be given to any grounding information pertaining to this duct furnace. To prevent the risk of electrocution, the furnace must be securely and adequately grounded. This should be accomplished by connecting a grounded conductor between the service panel and the furnace. To ensure a proper**

ground, the grounding means must be tested by a qualified electrician.

- **Do not insert fingers or foreign objects into the furnace or its air moving device. Do not block or tamper with the heater in any manner while in operation or just after it has been turned off, as some parts may be hot enough to cause injury.**
- **This furnace is intended for general heating applications ONLY. It must NOT be used in potentially dangerous locations such as flammable, explosive, chemical-laden or wet atmospheres.**
- **In cases in which property damage may result from malfunction of the furnace, a backup system or a temperature sensitive alarm should be used.**
- **When connecting to existing gas lines be sure to valve off the gas supply ahead of connection point. To avoid explosion or possible fire, always purge all residual gas from piping before cutting into existing line or removing threaded fittings. Failure to remove all gas vapors could result in death or serious injury or equipment or property-only-damage.**

Unless otherwise specified, the following conversions may be used for calculating SI unit measurements:

1 foot = 0.305 m	1 inch water column = 0.249 kPa
1 inch = 25.4 mm	1 meter/second = FPM ÷ 196.8
1 psig = 6.894 kPa	1 liter/second = CFM x 0.472
1 pound = 0.453 kg	1000 Btu per hour = 0.293 kW
1 gallon = 3.785 L	1000 Btu/Cu. Ft. = 37.5 MJ/m^3
	1 cubic foot = 0.028 m^3

Identification of Parts

Figure 1. Burner assembly parts (bottom view)

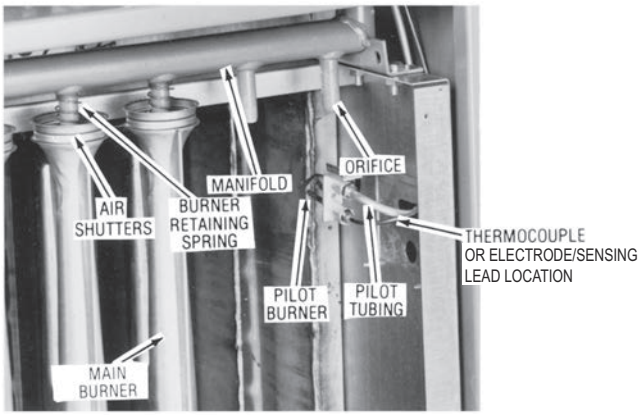

Figure 2. Duct furnace components

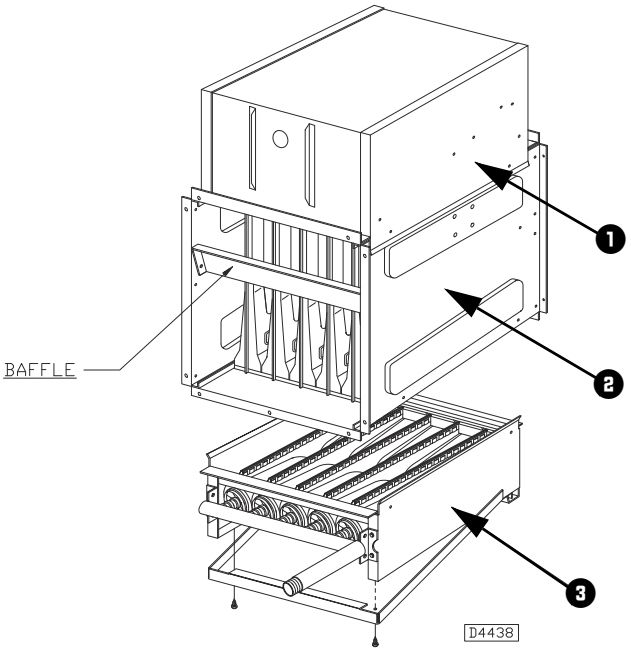

Figure 3. Burners/Controls (bottom view)

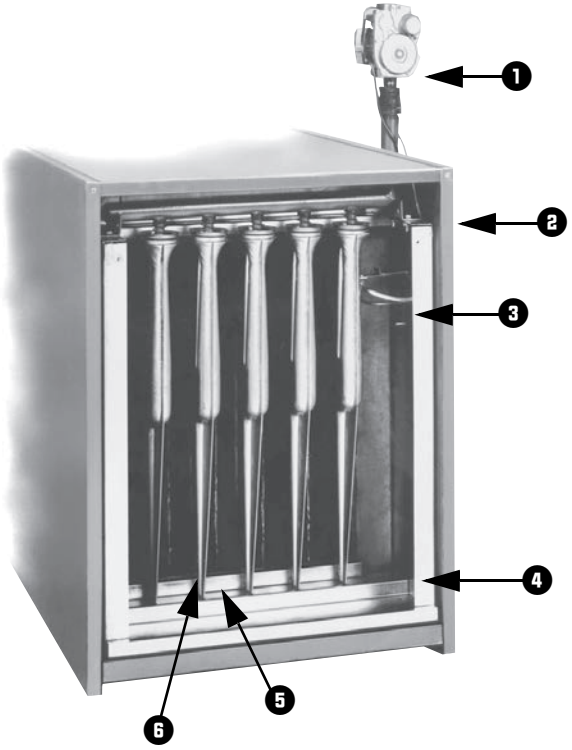

1. "Packaged" Gas Valve
2. Pilot Observation Point
3. Pilot Burner Assembly Parts
4. Burner "Drawer"
5. Flame Carryover
6. Main Burner

Unit Dimensions and Weights

Figure 4. Power Vented Furnace—bottom service access

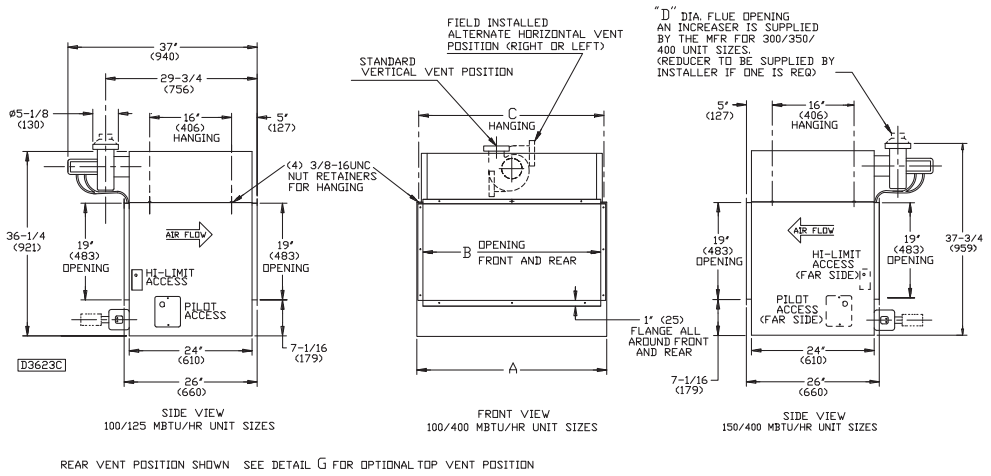

Table 1. Power Vented Duct Furnace

Unit Size	A in. (mm)	B in. (mm)	C in. (mm)	D (Dia.) in. (mm)	F in. (mm)	Gas Inlet in. Nat.	Gas Inlet in. LP	Weight lb (kg)
100	17-7/8 (454)	15-1/2 (394)	17-1/8 (435)	4 (102)	23-7/8 (606)	1/2	1/2	173 (78)
125	20-5/8 (524)	18-1/4 (464)	19-7/8 (505)	4 (102)	25-5/8 (651)	1/2	1/2	186 (84)
150	20-5/8 (524)	18-1/4 (464)	19-7/8 (505)	4 (102)	26-5/8 (676)	1/2	1/2	197 (89)
175	23-3/8 (594)	21 (533)	22-5/8 (575)	4 (102)	29-3/8 (746)	1/2	1/2	216 (98)
200	26-1/8 (664)	23-3/4 (603)	25-3/8 (645)	5 (127)	32-1/8 (816)	1/2	1/2	232 (105)
225	28-7/8 (733)	26-1/2 (673)	28-1/8 (714)	5 (127)	34-7/8 (886)	3/4	1/2 or 3/4	254 (115)
250	31-5/8 (803)	29-1/4 (743)	30-7/8 (784)	5 (127)	37-5/8 (956)	3/4	1/2 or 3/4	263 (119)
300	37-1/8 (943)	34-3/4 (883)	36-3/8 (924)	6 (152)	43-1/8 (1095)	3/4	1/2 or 3/4	312 (142)
350	42-5/8 (1083)	40-1/4 (1022)	41-7/8 (1064)	6 (152)	48-5/8 (1235)	3/4	1/2 or 3/4	389 (176)
400	48-1/8 (1222)	45-3/4 (1162)	47-3/8 (1203)	6 (152)	54-1/8 (1375)	3/4	1/2 or 3/4	403 (183)

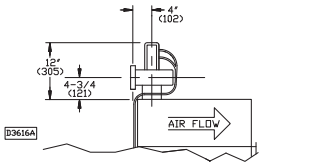

POSITIONS - FRONT - REAR - RIGHT - LEFT

DIMENSIONS XX" STANDARD UNITS
DIMENSIONS IN PARENTHESIS (XX) MILLIMETERS

Figure 5. Power Vented Duct Furnace—side service access

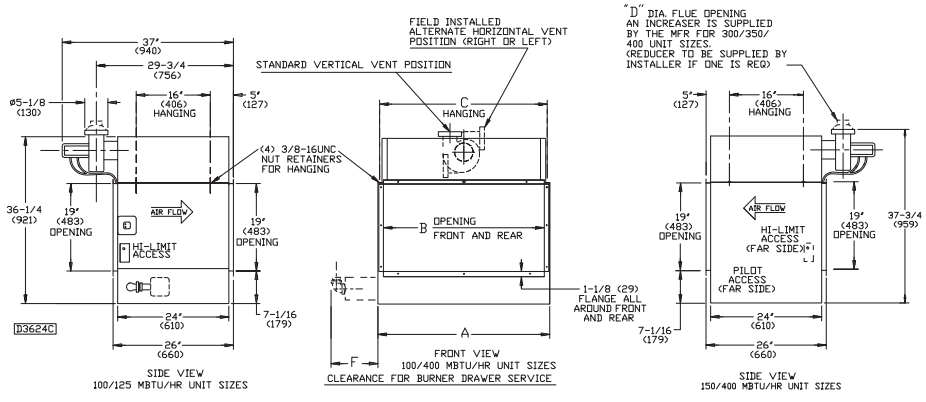

Unit Dimensions and Weights

Table 2. Performance data

Unit Size	Input MAX MBh (kW)	Input MIN MBh (kW)	Output MBh (kW)	MIN cfm (m^3/s)	Temp. Rise °F (°C)	P.D. in. of H_2O (kPa)	MAX cfm (m^3/s)	Temp. Rise °F (°C)	P.D. in. of H_2O (kPa)
100	100 (29.3)	50 (14.6)	80 (23.4)	929 (0.438)	80 (44)	0.12 (0.03)	2469 (1.165)	30 (17)	0.90 (0.22)
125	125 (36.6)	62.5 (18.3)	100 (29.3)	1157 (0.546)	80 (44)	0.13 (0.03)	3086 (1.457)	30 (17)	0.80 (0.20)
150	150 (43.9)	75 (22.0)	120 (35.1)	1389 (0.656)	80 (44)	0.15 (0.04)	3704 (1.748)	30 (17)	0.75 (0.19)
175	175 (51.2)	87.5 (25.6)	140 (41.0)	1620 (0.765)	80 (44)	0.14 (0.03)	4321 (2.040)	30 (17)	0.75 (0.19)
200	200 (58.6)	100 (29.3)	160 (46.9)	1852 (0.874)	80 (44)	0.14 (0.03)	4938 (2.331)	30 (17)	0.75 (0.19)
225	225 (65.9)	112.5 (32.9)	180 (52.7)	2083 (0.983)	80 (44)	0.14 (0.03)	5556 (2.622)	30 (17)	0.75 (0.19)
250	250 (73.2)	125 (36.6)	200 (58.6)	2315 (1.093)	80 (44)	0.14 (0.03)	6173 (2.914)	30 (17)	0.80 (0.20)
300	300 (87.8)	150 (43.9)	240 (70.3)	2778 (1.311)	80 (44)	0.13 (0.03)	7407 (3.496)	30 (17)	0.90 (0.22)
350	350 (102.5)	175 (51.2)	280 (82.0)	3241 (1.530)	80 (44)	0.13 (0.03)	8642 (4.079)	30 (17)	0.90 (0.22)
400	400 (117.1)	200 (58.6)	320 (93.7)	3704 (1.748)	80 (44)	0.14 (0.03)	9877 (4.662)	30 (17)	0.90 (0.22)

Notes:
1. Ratings are shown for unit installations at elevations between 0 and 2,000 ft. (610 m).
2. For unit installations in U.S.A. above 2,000 ft. (610 m), the unit input must be derated 4 percent for each 1,000 ft. (305 m) above sea level; refer to local codes, or in absence of local codes, refer to the latest edition of the National Fuel Gas Code, ANSI Standard Z223.1 (N.F.P.A. No. 54).
3. For installations in Canada, any references to deration at altitudes in excess of 2,000 ft. (610 m) are to be ignored.
4. At altitudes of 2,000 to 4,500 ft. (610 to 1372 m), the unit must be derated 90 percent of the normal altitude rating, and be so marked in accordance with the ETL certification.

Figure 6. Temperature rise and pressure drop graph

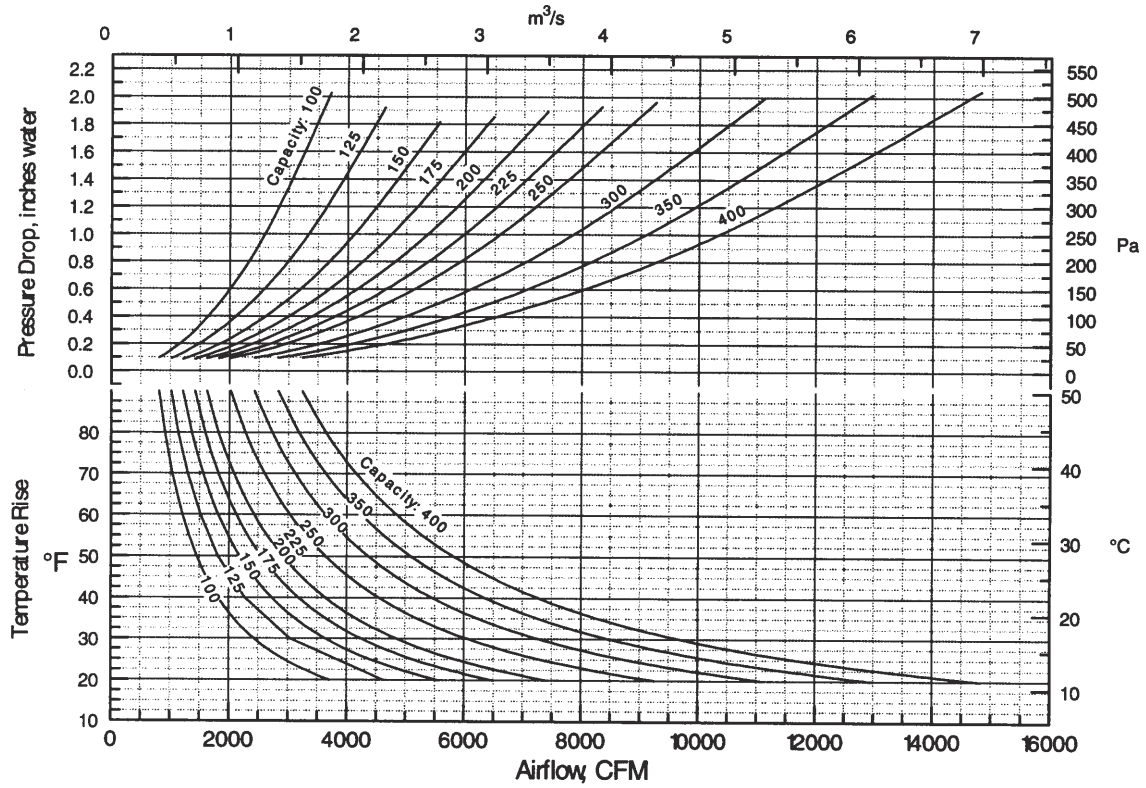

Installation: Mechanical

NOTICE:

Equipment Damage!

Do not install duct furnaces in corrosive or flammable atmospheres! Premature failure of, or severe damage to the unit could result! Avoid locations where extreme drafts can affect burner operation. Duct furnaces must not be installed in locations where air for combustion would contain chlorinated, halogenated or acidic vapors. If located in such an environment, premature failure of the unit could occur!

When the unit is equipped with an automatic gas ignition system, the duct furnaces must be installed such that the gas ignition control system is not directly exposed to water spray, rain, or dripping water.

Note: *Location of duct furnaces is related directly to the selection of sizes. Basic rules are as follows:*

Aircraft Hangers. Duct furnaces must be installed in aircraft hangars and public garages as follows: in aircraft hangars, duct furnaces must be at least 10 feet (3.0 m) above the upper surface of wings or engine enclosures of the highest aircraft to be stored in the hangar, and 8 feet (2.4 m) above the floor in shops, offices and other sections of the hangar where aircraft are not stored or housed. Refer to current ANSI/NFPA No. 409, Aircraft Hangars. In Canada, installation is suitable in aircraft hangars when acceptable to the enforcing authorities.

Public Garages. In repair garages, duct furnaces must be installed in a detached building or room separate from repair areas as specified in the latest edition of NFPA 88B, Repair Garages.

In parking structures, duct furnaces must be installed so that the burner flames are located a minimum of 18 inches (457 mm) above the floor or protected by a partition not less than 18 inches (457 mm) high. Refer to the latest edition of NFPA 88A, Parking Structures.

In Canada, installation must be in accordance with the latest edition of CSA B149 "Installation Codes for Gas Burning Appliances and Equipment."

NOTICE:

Maintain Minimum Thermostat Setting!

Duct furnaces should not be installed to maintain low temperatures and/or freeze protection of buildings. A minimum of 50°F (10°C) thermostat setting must be maintained. If duct furnaces are operated to maintain lower than 50°F (10°C), hot flue gases are cooled inside the heat exchanger to a point where water vapor (a flue gas by-product) condenses onto the heat exchanger walls. The result is a mildly corrosive acid that prematurely corrodes the aluminized heat exchanger and can actually drip water down from the duct furnace onto the floor surface. Additional duct furnaces should be installed if a minimum 50°F (10°C) thermostat setting cannot be maintained. Failure to follow these recommendations could result in equipment or property damage.

⚠WARNING

Overheating or Flooding Could Cause Fire or Explosion!

Overheating or flooding (where any part of the duct furnace has been under water) could result in fire or explosion. Should overheating occur, or the gas supply fails to shut off, shut off the manual gas valve to the duct furnace before shutting off the electrical supply. Do not use the duct furnace if any part has been under water. Immediately call a qualified service technician to inspect the duct furnace and replace any gas control which has been underwater. Failure to follow these recommendations could result in death or serious injury.

⚠WARNING

Hazardous Gases and Flammable Vapors!

Exposure to hazardous gases from fuel substances have been shown to cause cancer, birth defects or other reproductive harm. Improper installation, adjustment, alteration, service or use of this product could cause flammable mixtures. To avoid hazardous gases and flammable vapors follow proper installation and set up of this product and all warnings as provided in this manual. Failure to follow all instructions could result in death or serious injury.

Clearances

⚠WARNING

Combustible Materials!

Maintain proper clearance between the unit heat exchanger, vent surfaces, and combustible materials. Refer to unit nameplate and installation instructions for proper clearances. Improper clearances could result in a fire hazard. Failure to maintain proper clearances could result in death or serious injury or property damage.

Maintain adequate clearances around air openings into combustion chamber:

Table 3. Minimum clearances

Sides	**6" (152 mm)**
Top	**6" (152 mm)**
Bottom	**6" (152 mm)**
Flue	**6" (152 mm)**

Note: When the clearances required for accessibility are greater than the minimum required safety clearances, the accessibility clearances take precedence.

Accessibility

If the unit is a bottom service access type, allow a minimum of 21 inches (533 mm) at the bottom of the unit to facilitate servicing the burners and pilot, or six inches (152 mm) if the unit has a side access burner drawer. Provision should also be made to assure accessibility for recurrent maintenance purposes.

Drafts

Avoid installing the duct furnace in an extremely drafty location. Strong drafts may cause pilot outage. Units with intermittent pilot ignition may be preferable in areas where drafts cannot be avoided.

Atmospheres containing commercial solvents or chlorinated hydrocarbons will produce corrosive acids when coming in contact with the flames. This will greatly reduce the life of the gas duct furnace and may void the warranty. Avoid such areas.

⚠WARNING

Fire Hazard!

If the gas duct furnace is to be used in a building classified as having a hazardous atmosphere, the installation must comply with the standards set by the National Board of Fire Underwriters. Consult the authorities having jurisdiction before starting the job. Failure to follow recommendations could result in death or serious injury.

The duct furnace must be installed on the positive pressure side of the air circulation blower.

Ductwork

Properly designed and installed ductwork, providing a uniformly distributed flow of air across the surfaces of the heat exchanger, is essential to satisfactory unit performance and life of the equipment.

All duct connection flanges/seams must be sealed to prevent air leaks. Sealant/tape must be suitable for temperatures 250°F (121°C) minimum.

NOTICE:

Use 90° Duct Connection Flanges!

Ducts must be properly connected to duct furnaces for operation. Do not straighten the 90° duct connection flanges on the duct furnaces. Straightening the 90° duct connection flanges will affect the operation of the furnace and will void the warranty.

If uniform air distribution is not obtained, install additional baffles and/or turning vanes in the ductwork.

Figure 7 and Figure 8 illustrate recommended ductwork designs for both the straight-through and elbowed air inlet arrangements.

Figure 7. Recommended design for field installation of ductwork for straight-through arrangement

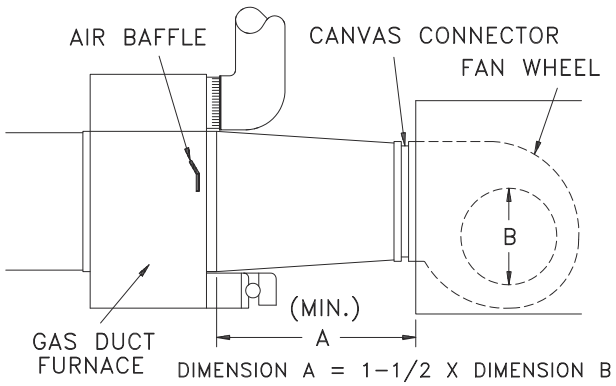

Figure 8. Recommended ductwork design for elbowed arrangement

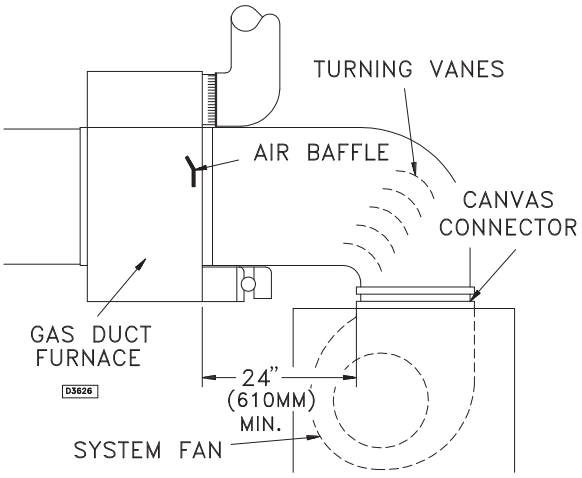

Access panels large enough to observe smoke and reflected light, and to detect the presence of leaks in the heating equipment, are required both upstream and downstream from gas duct furnaces. These panels must be sealed to prevent air leaks. If allowed by local regulations, install canvas connectors between the ductwork and fan discharge opening to eliminate the transmission of mechanical vibration.

Air Flow

The installation is to be adjusted to obtain an air throughput within the range specified on the appliance rating plate.

Combustion Inlet Air Ventilation

Inlet Air From Another Room

If the duct furnace is installed in a tightly constructed room or compartment, provide two inlet air openings. The size of each vent opening should be no less than one square inch (6.452 square centimeters) of free area for each 1000 Btu/hr. (293 W) input. Each opening must not be less than 100 square inches (645 square centimeters).

Inlet Air From Outdoors

If the enclosed space is to have inlet combustion air from the outside, the vent opening must not be smaller than one square inch (6.452 square centimeters) of free area for each 2500–3000 Btu/hr (733–879 W) input. Each opening must not be less than 100 square inches (645 square centimeters).

Bypass

When a gas duct furnace is installed to operate in conjunction with a summer air conditioning system, the cfm air delivery of the system blower should be adjusted to meet the design air volume requirements for cooling. If this cfm delivery is greater than that required for heating, resulting in a low air temperature rise, install a damper bypass around the gas duct furnace to bypass a portion of the air.

Suspension

⚠WARNING

Heavy Objects!

Ensure that all hardware used in the suspension of each duct furnace is capable of supporting the unit weight. Failure to do so could result in unit falling off its mounting location, which could result in death or serious injury.

NOTICE:

Equipment Damage!

The duct furnace must be hung level from side to side and front to back, from four suspension points provided at the top of the unit. Failure to do so could result in poor performance and/or premature failure of the unit. Refer to Figure 9, p. 14 for typical suspension arrangements.

⚠WARNING

Heavy Objects!

Make certain that the lifting methods used to lift the duct furnace and the method of suspension used in the field installation of the duct furnace are capable of uniformly supporting the weight of the furnace at all times. Make certain that the structure to which the furnace is mounted is capable of supporting its weight. Under no circumstances must the heater gas lines, the venting system or the electrical conduit be used for support. Failure to follow recommendations could result in death, serious injury, or property damage.

Figure 9.

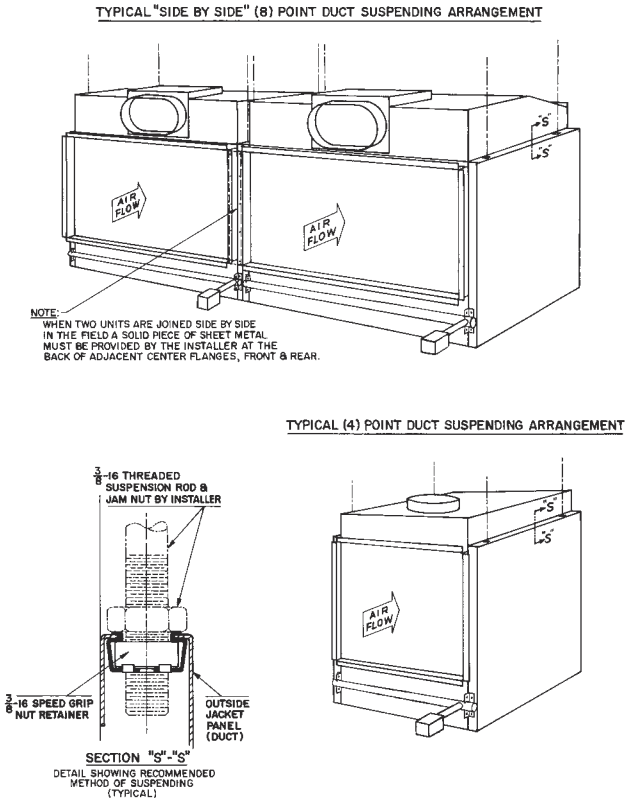

Nozzle Assembly

Use the following procedure for assembling the 30-, 60-, or 90-degree nozzle assembly to your unit heater.

1. Remove the louvers and the cone springs from the unit heater.
2. Remove the four (4) screws from the upper section of the front of the unit heater and use these same screws to temporarily attach the top bracket (P/N 252-07948-00X).
   a. Using the holes in the top bracket as a guide, pre-drill a 1/8" (0.125") hole at each location across the front panel of the unit heater.
   b. Using the enclosed screws, permanently attach the top bracket.
3. Remove the upper two (2) screws from the lower section on the front of the unit heater. Repeat the procedure described in Step 2 using the bottom bracket (P/N 252-07949-00X).
4. Using the sixteen (16) 5/16-12 x 1/2 screws, attach the left and right side panel (P/N 251-07944 and 251-07946) to the unit heater using the holes to which the louvers were attached.
5. Using the enclosed #8-18 x 1/2 screws and with the top panel oriented such that the side with the larger holes is facing the unit heater, attach the top panel (P/N 251-07942-00X) to the top bracket and the two (2) side panels.

   Note: *The top panel must be attached so that the side with the larger holes is facing the unit heater; this is a requirement for later steps in this installation procedure.*
6. Using the enclosed #8-18 x 1/2 screws and with the bottom panel oriented such that the side with the larger holes is facing the unit heater, attach the bottom panel (P/N 251-07943-00X) to the bottom bracket and the two (2) side panels.

   Note: *The bottom panel must be attached so that the side with the larger holes is facing the unit heater; this is a requirement for later steps in this installation procedure.*

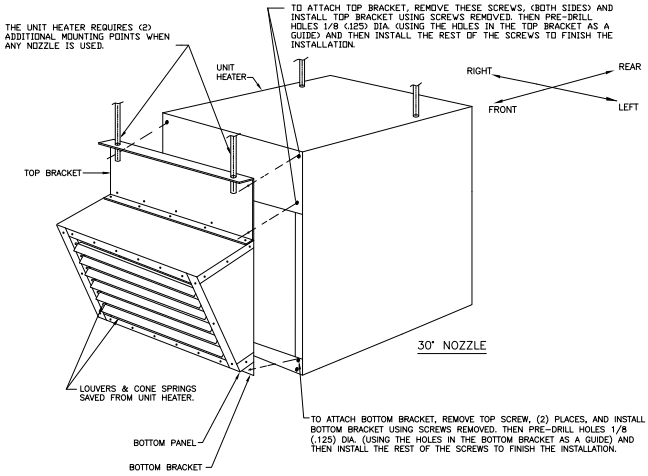

7. *For 30-degree nozzle assemblies:* Go to Step 10.
8. *For 60- and 90-degree nozzle assemblies:* Using the enclosed #8-18 x 1/2 screws and with the top and bottom panels oriented such that the sides with the larger holes are facing the unit heater, create a sub-assembly by attaching the top panel (P/N 251-07942-00X) and the bottom panel (P/N 251-07943-00X) to the left side panel (P/N 251-07945) and to the right side panel (P/N 251-07947).

   Note: *The top and bottom panels must be attached so that the sides with the larger holes are facing the unit heater; this makes the assembly easier.*

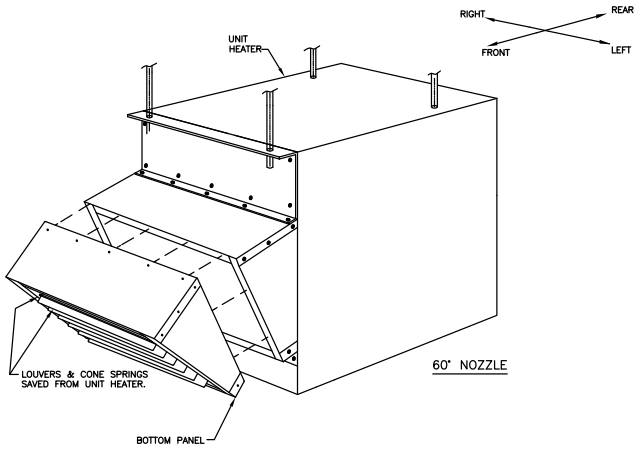

Note: *For 90-degree nozzle assemblies, repeat Step 8 to create a second sub-assembly.*

9. *For 60- and 90-degree nozzle assemblies:* Using the enclosed #8-18 x 1/2 screws, attach the sub-assembly created in Step 8 to the 30-degree assembly installed to the unit (in Step 1 through Step 6 of this procedure). Attach the corresponding panels (i.e., top panel to top panel, right side panel to right side panel, etc).

   Note: *For 90-degree nozzle assemblies, install the second sub-assembly by attaching it to the first sub-assembly. Attach the corresponding panels (i.e., top panel to top panel, right side panel to right side panel, etc).*

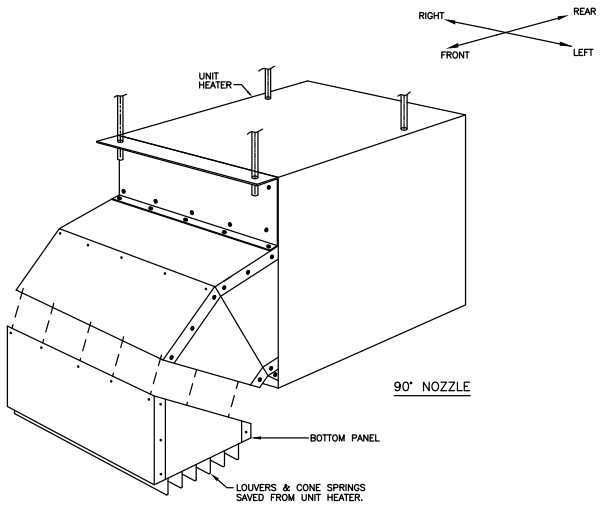

10. Install the louvers and cone springs.

Installation: Piping

Gas Piping

⚠WARNING

Flammable Vapors!

When connecting to existing gas lines be sure to valve off the gas supply ahead of connection point. To avoid explosion or possible fire, always purge all residual gas from piping before cutting into existing line or removing threaded fittings. Failure to remove all gas vapors could result in death or serious injury or equipment or property-only damage.

Pipe Sizing

To provide adequate gas pressure at the gas duct furnace, size the gas piping as follows:

1. Find the ft^3/hr by using the following formula:

$$ft^3/hr = \frac{\text{Input}}{\text{Btu per } ft^3}$$

2. Refer to Table 4, p. 17. Match "Length of Pipe" with appropriate "Gas Input - Ft^3/Hr" value. This value can then be matched to the pipe size at the left of the table.

   Example: It is determined that a 67 foot (20.4 m) run of gas pipe is required to connect a 200 MBtu gas duct furnace to a 1,000 Btu/ft^3 (0.29 kW) natural gas supply.

$$\frac{200{,}000 \text{ Btu/hr}}{1{,}000 \text{ Btu/ft}^3} = 200 \text{ ft}^3/\text{hr}$$

Using Table 4, p. 17, a 1-inch nominal diameter pipe is needed.

Notes:

- *See "General Safety Information," p. 7 for English/SI (metric) unit conversion factors.*
- *If more than one gas duct furnace is to be served by the same piping arrangement, the total cubic feet per hour input and length of pipe must be considered.*
- *If the gas duct furnace is to be fired with LP gas, refer to Table 4 and consult the local LP gas dealer for pipe size information.*

⚠WARNING

Hazard of Explosion and Fire!

Heater installation for use with propane (LP gas) must be made by a qualified LP Gas Dealer or LP Gas Installer to ensure that all appropriate codes, installation procedures, and precautions have been followed. Failure to follow these instructions could result in death or serious injury.

Before any connection is made to an existing line supplying other gas appliances, contact the local gas company to make certain that the existing line is of adequate size to handle the combined load.

Table 4. Gas pipe size[a]

Nominal Iron Pipe Size, in.	Internal Diameter, in. (mm)	Length of Pipe, ft (m)													
		10 (3.0)	20 (6.1)	30 (9.1)	40 (12.2)	50 (15.2)	60 (18.3)	70 (21.3)	80 (24.4)	90 (27.4)	100 (30.5)	125 (38.1)	150 (45.7)	175 (53.3)	200 (61.0)
1/2	0.622	175	120	97	82	73	66	61	57	53	50	44	40	37	35
	(16)	(4.96)	(3.40)	(2.75)	(2.32)	(2.07)	(1.87)	(1.73)	(1.61)	(1.50)	(1.42)	(1.25)	(1.13)	(1.05)	(0.99)
3/4	0.824	360	250	200	170	151	138	125	118	110	103	93	84	77	72
	(21)	(10.2)	(7.08)	(5.66)	(4.81)	(4.28)	(3.91)	(3.54)	(3.34)	(3.11)	(2.92)	(2.63)	(2.38)	(2.18)	(2.04)
1	1.049	680	465	375	320	285	260	240	220	205	195	175	160	145	135
	(27)	(19.3)	(13.2)	(10.6)	(9.06)	(8.07)	(7.36)	(6.80)	(6.23)	(5.80)	(5.52)	(4.96)	(4.53)	(4.11)	(3.82)
1-1/4	1.380	1400	950	770	660	580	530	490	460	430	400	360	325	300	280
	(35)	(39.6)	(26.9)	(21.8)	(18.7)	(16.4)	(15.0)	(13.9)	(13.0)	(12.2)	(11.3)	(10.2)	(9.20)	(8.50)	(7.93)
1-1/2	1.610	2100	1460	1180	990	900	810	750	690	650	620	550	500	460	430
	(41)	(59.5)	(41.3)	(33.4)	(28.0)	(25.5)	(22.9)	(21.2)	(19.5)	(18.4)	(17.6)	(15.6)	(14.2)	(13.0)	(12.2)
2	2.067	3950	2750	2200	1900	1680	1520	1400	1300	1220	1150	1020	950	850	800
	(53)	(112)	(77.9)	(62.3)	(53.8)	(47.6)	(43.0)	(39.6)	(36.8)	(34.5)	(32.6)	(28.9)	(26.9)	(24.1)	(22.7)
2-1/2	2.469	6300	4350	3520	3000	2650	2400	2250	2050	1950	1850	1650	1500	1370	1280
	(63)	(178)	(123)	(99.7)	(85.0)	(75.0)	(68.0)	(63.7)	(58.0)	(55.2)	(52.4)	(46.7)	(42.5)	(38.8)	(36.2)
3	3.068	11000	7700	6250	5300	4750	4300	3900	3700	3450	3250	2950	2650	2450	2280
	(78)	(311)	(218)	(177)	(150)	(135)	(122)	(110)	(105)	(97.7)	(92.0)	(83.5)	(75.0)	(69.4)	(64.6)
4	4.026	23000	15800	12800	10900	9700	8800	8100	7500	7200	6700	6000	5500	5000	4600
	(102)	(651)	(447)	(362)	(309)	(275)	(249)	(229)	(212)	(204)	(190)	(170)	(156)	(142)	(130)

Notes:
1. Determine the required ft^3/h by dividing the rated heater input by 1000. For SI / Metric measurements: Convert unit Btu/h to kilowatts. Multiply the unit input (kW) by 0.0965 to determine m^3/h.
2. FOR NATURAL GAS: Select the pipe size directly from the table.
3. FOR PROPANE GAS: Multiply the ft^3/h (m^3/h) value by 0.633; then use the table.
4. Refer to the metric conversion factors listed in "General Safety Information," p. 7 for more SI unit measurements/conversions.

(a) Maximum capacity of pipe in cubic feet of gas per hour (cubic meters per hour) for gas pressures of 0.5 psig (3.5 kPa) or less, and a pressure drop of 0.5 inch water column (124.4 Pa) (based on a 0.60 specific gravity gas).

Pipe Installation

1. Install the gas piping in accordance with applicable local codes.
2. Check gas supply pressure. Each duct furnace must be connected to a manifold pressure and a gas supply capable of supplying its full rated capacity as specified in Table 5, p. 18. A field LP tank regulator must be used to limit the supply pressure to maximum of 14 in. wc (3.5 kPa). All piping should be sized in accordance with the latest edition of ANSI Standard Z223.1 National Fuel Gas Code; in Canada, according to CSA B149. See Table 1, p. 9, and Table 4, p. 17 for correct gas supply piping size.

   If gas pressure is excessive on natural gas applications, install a pressure regulating valve in the line upstream from the main shutoff valve.

⚠WARNING

Hazard of Explosion!

Adequately support the piping to prevent strain on the gas manifold and controls. To prevent explosion, fire, or gas leaks, support piping so that piping does not sag or put pressure on the burners internal to the unit. Failure to follow these recommendations could result in death or serious injury or equipment or property-only-damage.

3. To prevent the mixing of moisture with gas, run the take-off piping from the top, or side, of the main.
4. Standard gas duct furnaces, optional two-stage units, and hydraulic modulating units are supplied with a combination valve which includes:
   a. Manual "A" valve
   b. Manual "B" valve
   c. Solenoid valve
   d. Pilot safety
   e. Pressure regulator

Pipe directly in to combination valve (see Figure 10, p. 18).

5. A 1/8 in. N.P.T. plugged tapping, accessible for test gauge connection, must be installed immediately upstream of the gas supply connection to the appliance.
6. Provide a drip leg in the gas piping near the gas duct furnace. A ground joint union and a manual gas shutoff valve should be installed ahead of the unit heater controls to permit servicing. The manual main shutoff valve must be located external to the jacket (see Figure 10, p. 18).
7. Make certain that all connections have been adequately doped and tightened.

NOTICE:

Overtightening!

Do not overtighten the inlet gas piping into the valve. This may cause stresses that could crack the valve!

Note: *Use pipe joint sealant resistant to the action of liquefied petroleum gases regardless of gas conducted.*

⚠WARNING

Hazard of Explosion!

Never use an open flame to detect gas leaks. Explosive conditions may occur. Use a leak test solution or other approved methods for leak testing. Failure to follow recommended safe leak test procedures could result in death or serious injury or equipment or property-only-damage.

Figure 10. Pipe installation, standard controls

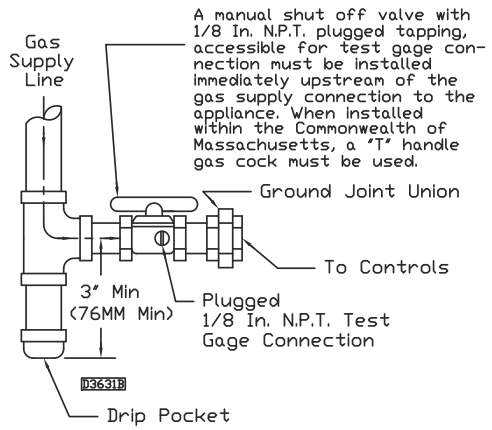

The appliance and its individual shutoff valve must be disconnected from the gas supply piping system during any pressure testing of that system at test pressures in excess of 1/2 psig (3.5 kPa).

The appliance must be isolated from the gas supply piping system by closing its individual manual shutoff valve during any pressure testing of the gas supply piping system at test pressures equal to or less than 1/2 psig (3.5 kPa).

Table 5. Gas piping requirements

Gas Type	Natural Gas	Propane (LP) Gas
Single Stage Gas Piping Requirements[a]		
Manifold Pressure	3.5 in. wc	10.0 in. wc
	(0.9 kPa)	(2.5 kPa)
Supply Inlet Pressure	14.0 in. wc Max.	14.0 in. wc Max.
	(3.5 kPa)	(3.5 kPa)
	5.0 in wc Min.	11.0 in wc Min.
	(1.2 kPa)	(2.7 kPa)
Two Stage Gas Piping Requirements[b]		
Supply Inlet Pressure	6.5 in. wc Min.	11.5 in. wc Min.
	(1.6 kPa)	(2.9 kPa)

(a) For single stage applications only, at normal altitudes.
(b) For two stage applications only, at normal altitudes.

Installation: Venting

ANSI now organizes vented appliances into four categories.

Table 6. Venting categories

	Non Condensing	Condensing
Negative Vent Pressure	I	II
Positive Vent Pressure	III	IV

Category I

Includes non-condensing appliances with negative vent pressure, like the traditional atmospheric unit heater.

Category II

Groups condensing appliances with negative vent pressure.

Category III

Appliances are non-condensing and operate with a positive vent pressure.

Category IV

Covers condensing appliances with positive vent pressure.

Note: *Category II and IV do not apply to equipment specified within this manual.*

⚠WARNING

Carbon Monoxide!

Your venting system must not be blocked by any snow, snow drifts, or any foreign matter. Inspect your venting system to ensure adequate ventilation exists at all times! A blocked venting system could result in carbon monoxide poisoning. Symptoms of such condition include grogginess, lethargy, inappropriate tiredness, or flu-like symptoms. Failure to follow these recommendations could result in death or serious injury.

Venting for Power Vented (Category III) Duct Furnaces

All duct furnaces must be vented!

⚠WARNING

Carbon Monoxide!

Your venting system must not be blocked by any snow, snow drifts, or any foreign matter. Inspect your venting system to ensure adequate ventilation exists at all times! A blocked venting system could result in carbon monoxide poisoning. Symptoms of such condition include grogginess, lethargy, inappropriate tiredness, or flu-like symptoms. Failure to follow these recommendations could result in death or serious injury.

⚠WARNING

Risk of Fire and Carbon Monoxide Poisoning with Improper Piping!

Never use a pipe of a diameter other than that specified in Table 1, p. 9! To prevent pipe from melting and introducing exhaust fumes into the air supply, never use PVC, ABS or any other non-metallic pipe for venting! To prevent fan restriction, an elbow should never be attached directly to the venter. Failure to follow recommendations could result in death or serious injury or equipment damage.

All venting installations shall be in accordance with the latest edition of Part 7, venting of Equipment of the National Fuel Gas Code, ANSI Z223.1, or applicable provisions of local building codes for power vented units. Also see p. 21 for additional Canadian installations.

Horizontal vent systems must be in compliance with UL 1738 for installations in the United States, and ULS636 for installations in Canada.

Power vented units are designed to be used with single wall vent pipe utilizing horizontal or vertical venting arrangements. These arrangements must **terminate external** to the building using either a single wall or double wall vent. See Figure 11, p. 20 through Figure 19, p. 24 for special installation requirements regarding these venting conditions.

⚠WARNING

Risk of Carbon Monoxide Poisoning with Type B Vent!

Do not use a type B double wall vent internally within the building on power vented units! Type B vent does not seal well under positive pressure and could result in exhaust fume leaks. Failure to follow these recommendations could result in death or serious injury.

If double wall venting (other than Type B; see preceding warning) is used, components which are UL Listed and approved for Category III positive pressure venting systems MUST be used.

A Briedart Type L, Field Starkap or an equivalent vent cap must be supplied by the customer for each power vented unit. The vent pipe diameter MUST be as specified in Table 1, p. 9 (“D” Dia. Flue Opening). A reducer must be field installed for 100 through 175 MBh Unit Sizes. All 300 through 400 MBh Unit sizes are factory equipped with the required flue increaser. Refer to Figure 11, p. 20 through Figure 19, p. 24 for additional requirements.

The venting system for these appliances shall terminate at least four feet (1.2 m) below, four feet (1.2 m) horizontal from, or one foot (0.3 m) above any door, window, or gravity air inlet into any building.

Through the wall vents for these appliances shall NOT terminate over public walkways, or over an area where condensate or vapor could create a nuisance or hazard or could be detrimental to the operation of regulators, relief valves, or other equipment.

The vent pipe equivalent length must be five feet (1.5 m) minimum and must not exceed 50 feet (15.2 m). Equivalent length is the total length of straight sections PLUS 15 feet (4.6 m) for each 90 degree elbow, eight feet (2.4 m) for each 45 degree elbow, and 10 feet (3.0 m) for the vent cap.

Maintain six inches (152 mm) between vent pipe and combustible materials. A minimum of 12 inches (305 mm) of straight pipe is required from the venter outlet before installing an elbow in the vent system. Never attach an elbow directly to the venter (see preceding warning).

Use single wall pipe constructed of 26 gauge galvanized steel or material of equivalent durability and corrosion resistance for the vent system. For installation in Canada, use pipe constructed from 0.025-inch thick aluminum or 0.018-inch thick stainless steel.

Any run of single wall vent pipe passing through an unheated space must be insulated with an insulation suitable to 550°F.

The vent terminal must be installed with a minimum clearance of four feet (1.2 m) from electric meters, gas meters, regulators and relief equipment.

Seal ALL vent pipe joints and seams to prevent leakage. Use General Electric RTV-108 or Dow Corning® RTV-732 silicone sealant or 3M #425 aluminum foil tape or equivalent.

The vent system must be installed to prevent collection of condensate. Vertical vent pipes should be equipped with condensate drains. Pitch horizontal pipes downward 1/4 inch per foot (21 mm per m) toward outlet for condensate drainage.

Horizontal portions of the venting system shall be supported at maximum intervals of four feet (1.2 m) to prevent sagging (in Canada, support at three feet (1 m) minimum intervals).

Insulate single wall vent pipe exposed to cold air or running through unheated areas.

⚠WARNING

Carbon Monoxide!

Never operate duct furnaces without combustion air and flue gas piping in place. Each unit MUST have its own combustion air system and MUST NOT be connected to other vent systems or to a chimney. Your venting system must not be blocked by any snow, snow drifts, or any foreign matter. Inspect your venting system to ensure adequate ventilation exists at all times! Failure to follow these recommendations could result in death or serious injury.

Units are shipped from the factory set up for vertical venting. To convert the power venter for horizontal venting, remove the shipping support bracket; refer to Figure 11, p. 20 and Figure 23, p. 35, and follow this procedure:

1. Hold power venter motor in position.
2. Remove the three Phillips-head screws from the motor adaptor plate.
3. Remove the three screws which connect the power venter stack to the power venter housing.
4. Rotate the power venter housing to the horizontal position.
5. Replace screws accordingly.

Note: *The motor, pressure switch, and junction box bracket MUST remain located as shipped from the factory for safe operation. Rotate only the blower housing! If the power venter housing is to be moved to the right horizontal position, the junction box must be rotated 90 degrees CCW to clear the connection. To do this, remove all wires, conduit and conduit connector from the junction box, noting location of wires. Move box, using holes provided. Move 7/8-inch plug from bottom of box to side. Reconnect all wires according to the unit's wiring diagram.*

Figure 11. (Optional) Top vent position

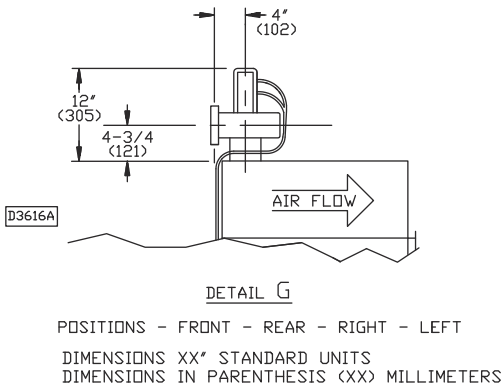

Table 7. Vent systems—termination clearance requirements[a]

Structure	Minimum for Termination Locations
Door, window or any gravity air inlet	4 feet below
	4 feet horizontally
	1 foot above
Forced air inlet within 10 ft.	3 feet above
Adjoining building or parapet	6 feet
Adjacent public walkways	7 feet above grade

(a) If the vent terminal is to be installed near ground level, the vent terminal must be positioned at least six inches above the maximum anticipated snow depth (see following for Canadian requirements).

Figure 12. Adaptor installation

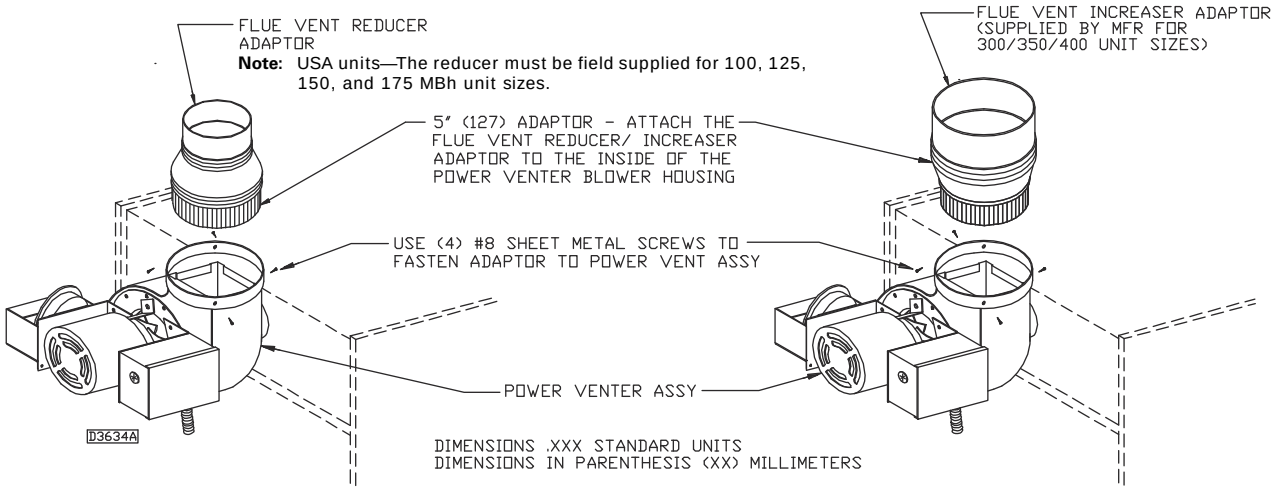

Refer to specification table and installation manual for proper usage.

The following instructions apply to Canadian installations in addition to installation and operating instructions:

1. Installation must conform with local building codes, or in absence of local codes, with current CSA B149.1, "Installation Codes for Natural Gas Burning Appliances and Equipment", or CSA B149.2, "Installation Codes for Propane Gas Burning Appliances and Equipment".
2. Any references to U.S. standards or codes in these instructions are to be ignored and the applicable Canadian standards or codes applied.
3. If using a metal vent system under positive gauge pressure in Canada, a slip fit vent connection must be secured by at least two corrosion-resistant screws, or other mechanical locking means.
4. The vent shall not terminate:
   a. Less than six feet (1.8 m) from a combustion air inlet or another appliance.
   b. Less than three feet (1 m) from any other building opening or any gas service regulator.
   c. Directly above a gas utility meter or service regulator.

Figure 13. Horizontal arrangement—single wall vent system to single wall termination

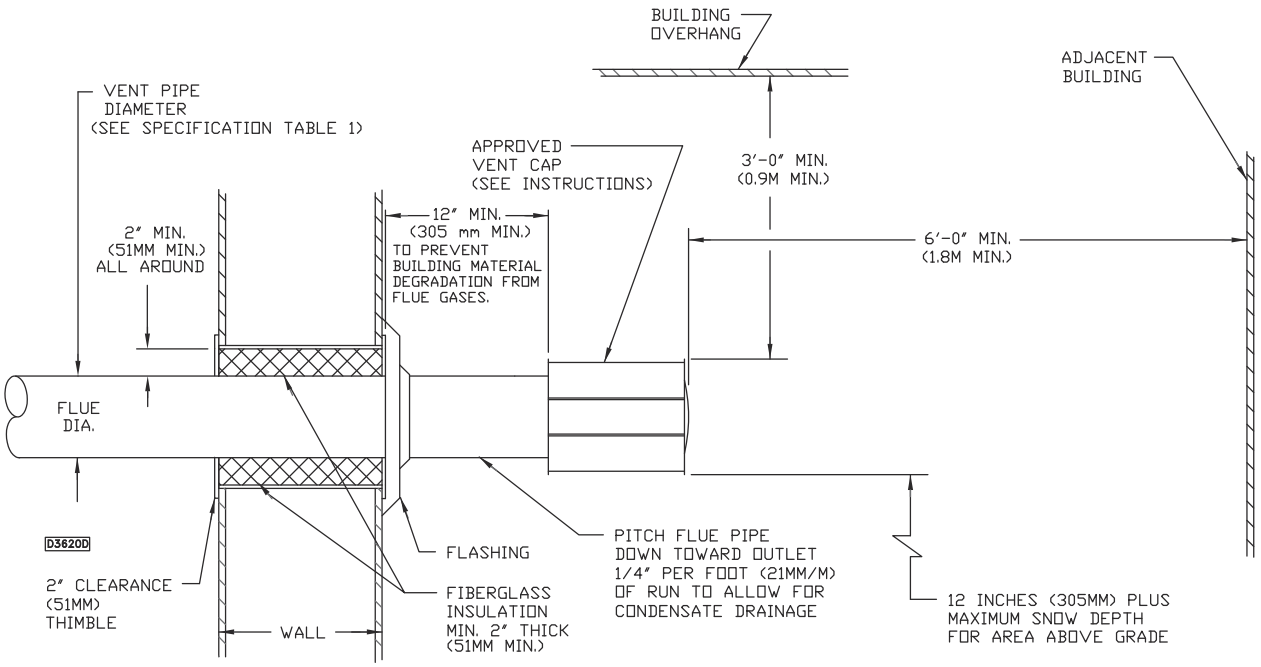

Figure 14. Vertical arrangement—single wall vent system to single wall termination

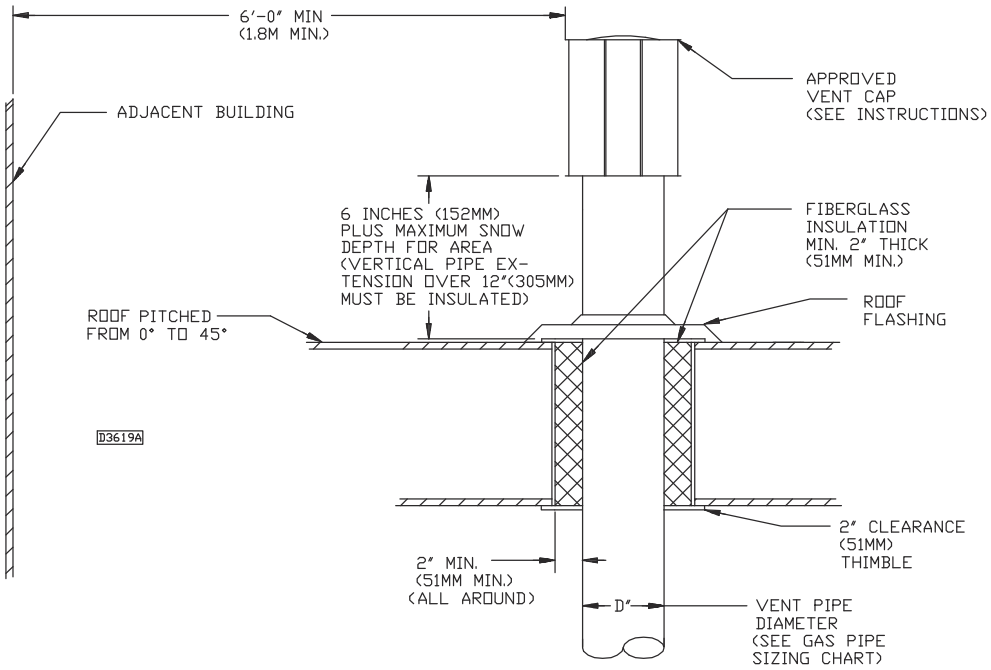

Figure 15. Horizontal arrangement—single wall vent system to double wall termination

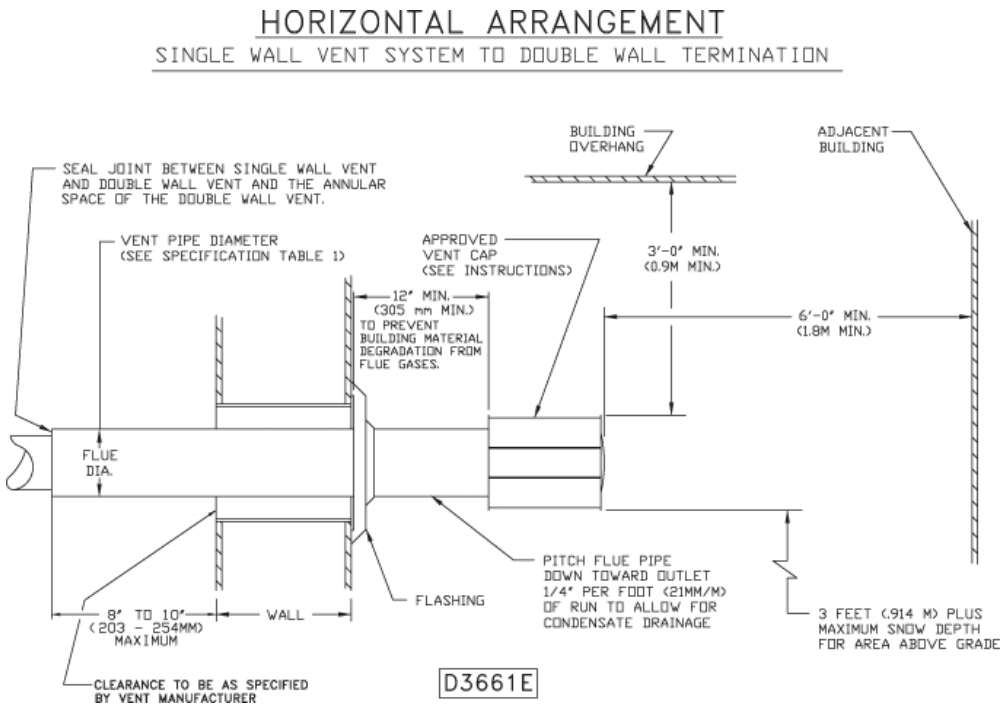

Figure 16. Vertical arrangement—single wall vent system to double wall termination

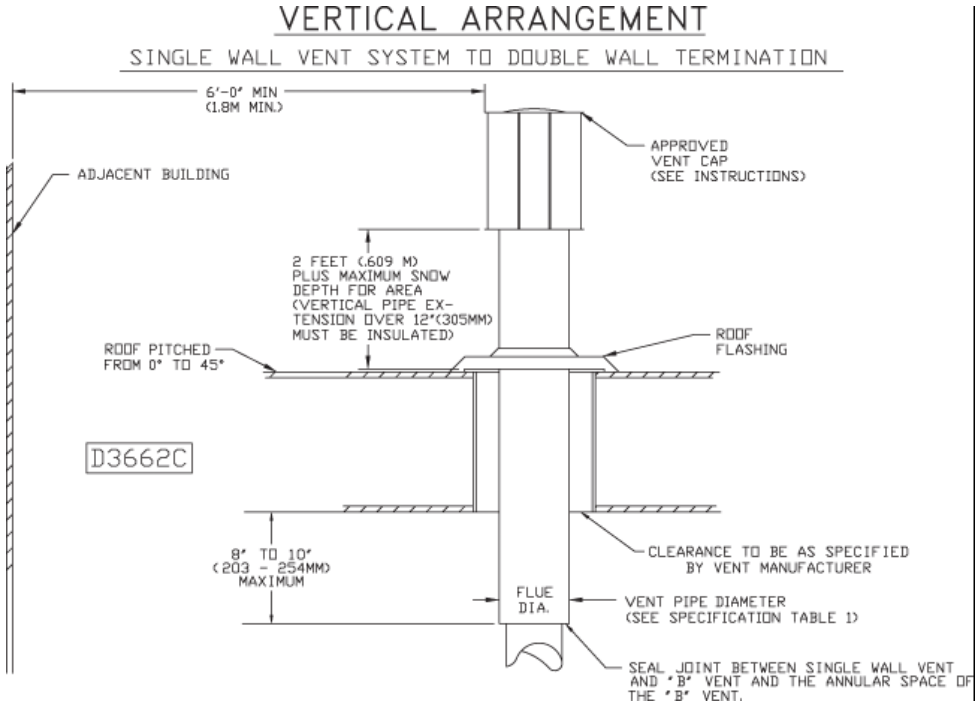

Figure 17. Horizontal left vent position (rear view of unit heater)

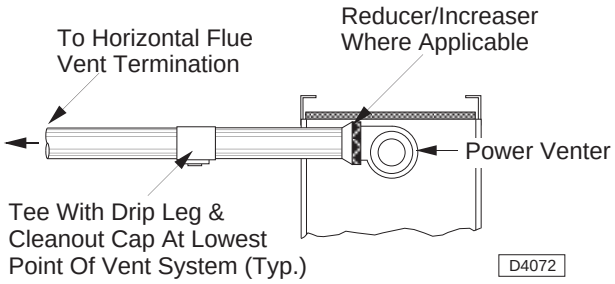

Figure 18. Horizontal right vent position (rear view of unit heater)

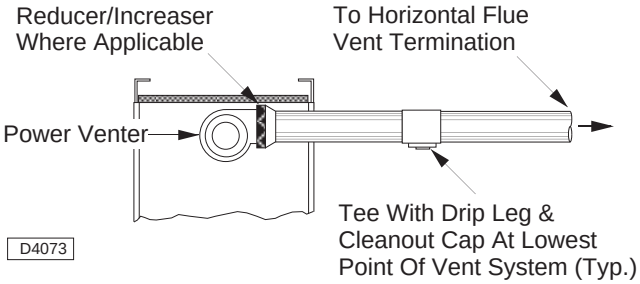

Figure 19. Vertical vent position (side view of unit heater)

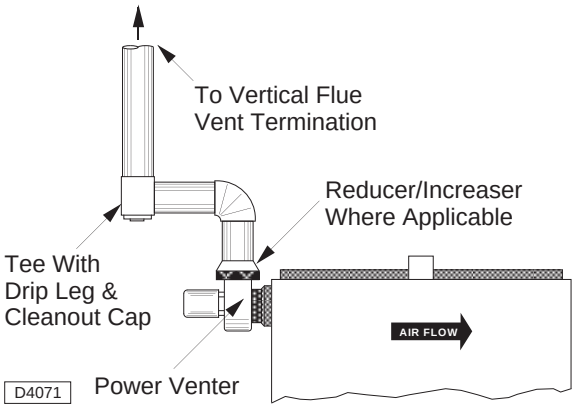

Installation: Electrical

Electrical Connections

⚠WARNING

Hazardous Service Procedures!

The maintenance and troubleshooting procedures recommended in this section of the manual could result in exposure to electrical, mechanical or other potential safety hazards. Always refer to the safety warnings provided throughout this manual concerning these procedures. When possible, disconnect all electrical power including remote disconnect and discharge all energy storing devices such as capacitors before servicing. Follow proper lockout/tagout procedures to ensure the power can not be inadvertently energized. When necessary to work with live electrical components, have a qualified licensed electrician or other individual who has been trained in handling live electrical components perform these tasks. Failure to follow all of the recommended safety warnings provided, could result in death or serious injury.

⚠WARNING

Hazardous Voltage and Gas!

Turn off the gas supply and disconnect all electric power, including remote disconnects before servicing unit. Follow proper lockout/tagout procedures to ensure the power can not be inadvertently energized and the gas can not be inadvertently turned on. Failure to turn off gas or disconnect power before servicing could result in death or serious injury.

⚠WARNING

Proper Field Wiring and Grounding Required!

All field wiring MUST be performed by qualified personnel. Improperly installed and grounded field wiring poses FIRE & ELECTROCUTION hazards. To avoid these hazards, you MUST follow requirements for field wiring installation and grounding as described in NEC and your local/state electrical codes. Failure to follow these requirements could result in death or serious injury.

Standard units are shipped for use on 115 volt, 60 hertz single phase electric power. The motor nameplate and electrical rating of the transformer should be checked before energizing the duct furnace electrical system. All external wiring must conform to the latest edition of ANSI/NFPA No. 70 National Electrical Code and applicable local codes; in Canada, to the Canadian Electrical Code, Part 1 CSA Standard C22.1.

NOTICE:

Use Copper Conductors Only!

Unit terminals are not designed to accept other types of conductors. Failure to use copper conductors could result in equipment damage.

It is recommended that the electrical power supply to each duct furnace be provided by a separate, fused, and permanently live electrical circuit. A disconnect switch of suitable electrical rating for each duct furnace should be located as close to the gas valve and controls as possible. Each duct furnace must be electrically grounded in accordance with the latest edition of the National Electric Code, ANSI/NFPA No. 70 or CSA Standard C22.1.

Thermostat Wiring and Location

Note: *The thermostat must be mounted on a vertical, vibration-free surface, free from air currents, and in accordance with the furnished instructions.*

Mount the thermostat approximately 5 feet (1.5 m) above the floor in an area where it will be exposed to a free circulation of average temperature air. Always refer to the thermostat instructions as well as our unit wiring diagram, and wire accordingly. Avoid mounting the thermostat in the following locations:

1. Cold areas—Outside walls or areas where drafts may affect the operation of the control.
2. Hot areas—Areas where the sun's rays, radiation, or warm air currents may affect control operation.
3. Dead areas—Areas where air cannot circulate freely, such as behind doors or in corners.

Note: *Thermostat wires tagged "W" and "G" must be connected together except when using a general purpose "SPDT" 24 Vac relay and a standard thermostat with subbase, or when using Honeywell T834H or T834N thermostats. Also refer to Figure 20, p. 25 for other wiring connections.*

Figure 20. C1267G, thermostat wiring diagram

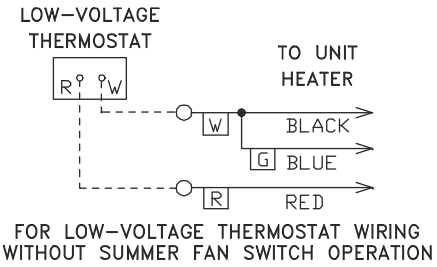

Thermostat Heat Anticipator Adjustments. The initial heat anticipator setpoint should equal the heater control circuit's current amperage draw when the unit is firing. This current should be measured for the best

results. Use the recommended ranges as a guide. If further information is needed, consult your thermostat manufacturer's instructions.

Recommended Heat Anticipator Setting Ranges:

25 ft. (7.6 m) T'stat Wiring	50 ft. (15.2 m) T'stat Wiring
0.85 to 0.90 A	0.90 to 1.1 A Max. Setting on T'stat

Fan Time Delay Control

Leads from the time delay controls are factory wired to the junction box (when ordered as an optional component). The fan control is a time delay relay (approximately 45 seconds ON, 65 seconds OFF). The fan control is rated at 17 amps.

Notes:

- *The start-up fan delay must not exceed 90 seconds from a cold start.*
- *For all wiring connections, refer to the wiring diagram shipped with your unit (either affixed to the side jacket or enclosed in your unit's installation instruction envelope). Should any original wire supplied with the heater have to be replaced, it must be replaced with wiring material having a temperature rating of at least 105°C.*

  Should any high limit switch wires have to be replaced, they must be replaced with wiring material having a temperature rating of 200°C minimum.

Start-Up

Operation

Power Vented Duct Furnaces with Intermittent (Spark) Pilot Ignition

⚠WARNING

Check and Test Safety Devices!

It is the installer's responsibility to check all safety controls! Check and test the operational functions of all safety devices supplied with this unit, and ensure that all are operating effectively. Failure to do so could result in unsafe conditions and could result in death, serious injury or property damage.

Explanation of Controls

1. The duct furnace is equipped with a dual automatic gas valve and electric ignition device (separate from the gas valve on most models) which provide the following functions:
   a. The duct furnace is equipped with a power vent system consisting of a power venter motor and blower, pressure switch, and sealed flue collector in place of the conventional draft diverter.

NOTICE:

Operate Unit within Specified Units!

Never operate the unit beyond the specified limits, severe damage to, and/or premature failure of the unit will result!

   b. The power venter motor is energized by the room thermostat on a call for heat. The pressure switch measures the flow through the vent system and energizes the indirect spark ignition system when the flow is correct.

⚠WARNING

Risk of Fire and Carbon Monoxide Poisoning!

The pressure switch MUST NOT be bypassed. The unit MUST NOT be fired unless the power venter is operating. Failure to follow these recommendations could result in death or serious injury.

NOTICE:

Additional Devices!

The addition of external draft hoods or power venters is not permitted. Addition of such devices could cause severe unit malfunction or failure!

   c. The indirect spark ignition system consists of an ignition control module, a dual combination gas valve, and a spark-ignited pilot burner. When the pressure switch closes, the pilot valve opens and a spark is generated to light the pilot burner. When the flame sensing circuit senses that pilot flame is established, the main gas valve is opened to supply gas to the main burners. When the thermostat is satisfied, the vent system is de-energized and both valves are closed to stop all flow of gas to the unit.
   d. Pilot solenoid valve also functions as a main gas valve to provide redundancy.
   e. Pressure regulator provides proper and steady gas pressure to the main burners.
   f. Manual shutoff valve for service and long term shut-down. (Separate from the automatic valve on some models.)
2. The high limit switch interrupts the flow of electric current to the main gas valve in case the heater becomes overheated.
3. The fan switch delays the operation of the fan until the heater is warmed, then keeps the fan running after the gas has been turned off until the useful heat has been removed. **The start-up fan delay must not exceed 90 seconds from a cold start.**
4. The wall thermostat (supplied optionally) is a temperature sensitive switch which operates the vent system and ignition system; it turns the main gas valve ON or OFF to control the temperature of the space being heated. It must be mounted on a vibration free, vertical surface away from air currents, in accordance with the instructions furnished with the thermostat (also refer to "Installation: Electrical," p. 25).

Start-Up

1. Open the manual valve supplying gas to the unit heater, and with the union connection loose, purge air from the gas line. Tighten the union and check for gas leaks, using a soapy water solution only.

⚠WARNING

Hazard of Explosion!

Never use an open flame to detect gas leaks. Explosive conditions may occur. Use a leak test solution or other approved methods for leak testing. Before attempting to light or relight the pilot, wait 5 minutes to allow gas which may have accumulated in the burner compartment to escape. Failure to follow recommended safe leak test procedures or pilot lighting/relighting instructions could result in death or serious injury or equipment or property-only-damage.

2. Open the manual valve on the unit heater.
3. Turn ON electrical power.

4. The unit should be under the control of the thermostat. Turn the thermostat to the highest point and determine that the power venter motor starts and the pilot and main burners ignite. Turn the thermostat to the lowest point and determine that the power venter motor shuts off and pilot and main burners are extinguished.
5. If pilot adjustment is required, remove the pilot adjustment seal cap and adjust the pilot screw to obtain proper flame. Clockwise rotation decreases pilot flame size. Replace the cap.
6. Turn the thermostat to the desired position.
7. Refer to "Gas Pressure Adjustments," p. 30 for more specifications.

Shut-Down

1. Turn the valve selector knob to the "OFF" position.
2. Turn off the electricity.
3. To relight, follow the instructions in "Start-Up," p. 27 (preceding section).

See Figure 21, p. 29 for burner component parts/ identification.

Figure 21. Burner components—intermittent pilot ignition[a]

Burner Drawer Common Parts:

1. Main Burners
2. Burner Manifold
   Note: Manifold shown for duct furnaces with bottom service access.
3. Air Shutters
4. Burner Springs
5. Main Burner Orifice
6. Transformer
7. Pilot Tubing

Controls:

8A. Main Gas Valve (Honeywell)
8B. Main Gas Valve (White-Rodgers)
9. Honeywell Ignitor
10. Honeywell Pilot Burner
11. Honeywell Pilot Orifice
13. High Limit (Safety device located on the rear header plate of the heat exchanger, air inlet side.)

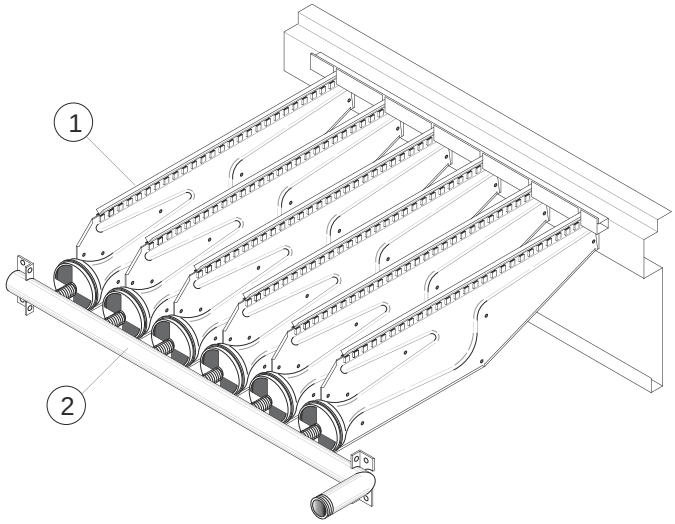

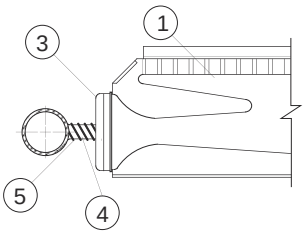

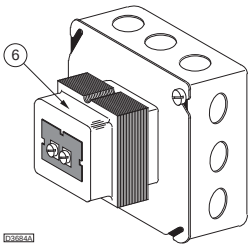

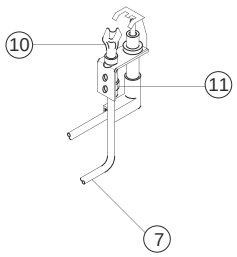

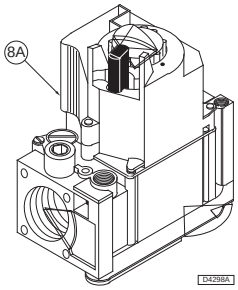

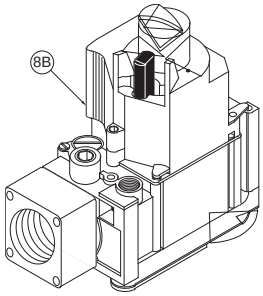

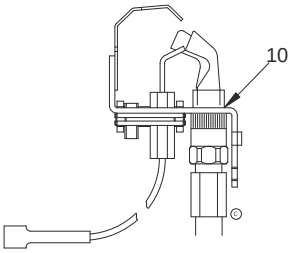

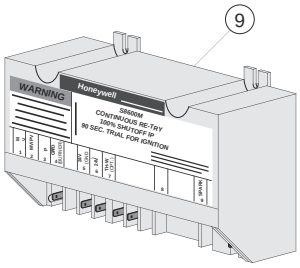

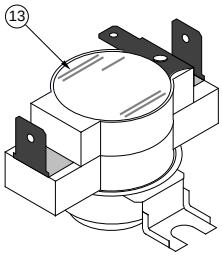

(a) Also refer to Figure 1, p. 8 through Figure 3, p. 8, Figure 23, p. 35, and Figure 24, p. 36 for component locations.

Gas Input Rate

NOTICE:

Overfiring!

Never overfire the duct furnace, as this could cause unsatisfactory operation, or shorten the life of the heater.

Check the gas input rate as follows:

1. Turn off all gas appliances that utilize gas through the same gas meter as the heater.
2. Turn gas on to the unit heater.
3. Using the gas meter, clock the time that it takes to burn one cubic foot of gas (Heating Value).
4. Insert the time, in seconds, into the formula below:

$$\text{Input Rate} = \frac{\text{Heating Value (Btu/ft}^3\text{) (3600 s/hr)}}{\text{Time (s/ft}^3\text{)}}$$

Example: If the heating value = 1000 BTU/ft^3 and the time/ft^3 = 18 s/ft^3 then

$$\text{Input Rate} = \frac{\text{(1000 BTU/ft}^3\text{) (3600 s/hr)}}{\text{18 s/ft}^3}$$

Input Rate = 200,000 BTU/hr

(Refer to "General Safety Information," p. 7 for metric conversions.)

Note: *If the computation exceeds, or is less than 95 percent of the gas Btu/h input rating (see "Unit Dimensions and Weights," p. 9), adjust the gas pressure:.*

Gas Pressure Adjustments

Adjust the gas pressure as follows:

1. NATURAL GAS: Best results are obtained when the heater is operating at its full input rating with the manifold pressure of 3.5 inches wc (0.9 kPa). Adjustment of the pressure regulator is not normally necessary since it is preset at the factory.

   However, field adjustment may be made as follows:

   a. Attach manometer at pressure tap plug adjacent to control outlet.

   b. Remove the regulator adjustment screw cap, located on the combination gas valve.

   c. With a small screwdriver, rotate the adjustment screw counterclockwise to decrease or clockwise to increase pressure. Do not force beyond stop limits.

   d. Replace regulator adjustment screw cap.

2. PROPANE GAS: An exact manifold pressure of 10.0 inches wc (2.5 kPa) must be maintained for proper operation of the heater. If the unit is equipped with a pressure regulator on the combination gas valve, follow Step a through Step d (above). If the unit is not so equipped, the propane gas supply system pressure must be regulated to attain this manifold operating pressure.

Table 8. Main burner orifice schedule(a)

Input in 1000 BTU(a)	Type of Gas Natural		Propane	No. of Burner Orifices
	Heating Value	1075 BTU/ft^3 (40.1 MJ/m^3)	2500 BTU/ft^3 (93.1 MJ/m^3)	
	Manifold Pressure	3.5" wc (0.9 kPA)	10" wc (2.5 kPA)	
100	ft^3/hr	96	40	4
	Orifice Drill	42	54	
125	ft^3/hr	120	50	5
	Orifice Drill	42	54	
150	ft^3/hr	140	60	6
	Orifice Drill	42	54	
175	ft^3/hr	163	70	7
	Orifice Drill	42	54	
200	ft^3/hr	186	80	8
	Orifice Drill	42	54	
225	ft^3/hr	210	90	9
	Orifice Drill	42	54	
250	ft^3/hr	233	100	10
	Orifice Drill	42	54	
300	ft^3/hr	280	120	12
	Orifice Drill	42	54	
350	ft^3/hr	326	140	14
	Orifice Drill	42	54	
400	ft^3/hr	372	160	16
	Orifice Drill	42	54	

Note: When installed in Canada, any references to deration at altitudes in excess of 2000 feet (610 m) are to be ignored. At altitudes of 2000 to 4500 feet (610 to 1372 m), the unit heaters must be orificed to 90 percent of the normal altitude rating, and be so marked in accordance with the ETL certification.

(a) This schedule is for units operating at normal altitudes of 2000 feet (610 m) or less. SPECIAL ORIFICES ARE REQUIRED FOR INSTALLATIONS ABOVE 2,000 FEET (610 m).

Primary Air Shutter Adjustment

After the unit has been operating for at least 15 minutes, adjust the primary air flow to the burners. Turn the friction-locked, manually-rotated air shutters clockwise to close, or counterclockwise to open.

For correct air adjustment, close the air shutter until yellow tips in the flame appear. Then open the air shutter to the point just beyond the position where yellow tipping disappears. Refer to Figure 22.

Note: *There may be momentary and spasmodic orange flashes in the flame. This is caused by the burning of airborne dust particles, and should not be confused with the yellow tipping, which is a stable or permanent situation when there is insufficient primary air.*

Figure 22. Main burner flames

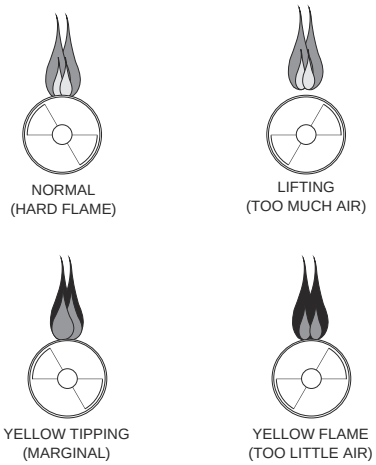

Pilot Adjustment

1. Remove the pilot adjustment cap.
2. Adjust the pilot screw to provide a properly sized flame.
3. A proper pilot flame is a soft steady flame that envelops 3/8- to 1/2-inch (9.5 to 12.7 mm) of the flame sensor tip.
4. Replace the pilot adjustment cap.

Manifold Pressure Adjustment

If the manifold pressure requires minor adjustment, remove the cap from the pressure regulator and turn the adjustment screw clockwise to increase the pressure, or counterclockwise to decrease the pressure. The adjusted manifold pressure should not vary more than 10 percent from the pressures specified in Table 8, p. 30.

Gas Equipment Start-Up

Customer _____ Job Name & Number _____

Pre-Inspection Information with Power and Gas Off

Type of Equip: Indoor Duct Furnace

Serial Number: _____ Model Number: _____

Name Plate Voltage: _____ Name Plate Amperage: _____

Type of Gas: Natural LP Tank Capacity: _____ lb Rating: _____ Btu @ ____ °F

_____ kg _____ kW @ ____ °C

- ❒ Are all panels, doors, vent caps in place?
- ❒ Has the unit suffered any external damage? Damage _____
- ❒ Does the gas piping and electric wiring appear to be installed in a professional manner?
- ❒ Has the gas and electric been inspected by the local authority having jurisdiction?
- ❒ Is the gas supply properly sized for the equipment?
- ❒ Were the installation instructions followed when the equipment was installed?
- ❒ Have all field installed controls been installed?
- ❒ Do you understand all the controls on this equipment? **If not, contact your wholesaler or rep. (DO NOT START this equipment unless you fully understand the controls.)**

GENERAL
With power and gas off.

- ❒ Make certain all packing has been removed.
- ❒ Tighten all electrical terminals and connections.
- ❒ Check all controls for proper settings.

GAS HEATING
With power and gas on.

- ❒ Inlet gas pressure. ____ in. wc or ____ kPa
- ❒ Pilot and main burner ignition.
- ❒ Manifold gas pressure. ____ in. wc or ____ kPa
- ❒ Check electronic modulation. Set at: _____
- ❒ Cycle and check all other controls not listed.
- ❒ Check operation of remote panel.
- ❒ Entering air temp. _____ °F or ____ °C
- ❒ Discharge air temp. (high fire) ____ °F. or ____ °C
- ❒ External static pressure _____ in. wc
- ❒ Cycle by thermostat or operating control.

  Carbon Monoxide ____ ppm

  Carbon Dioxide ____ %

Remarks: _____

_____

_____

Maintenance

⚠WARNING

Hazardous Service Procedures!

The maintenance and troubleshooting procedures recommended in this section of the manual could result in exposure to electrical, mechanical or other potential safety hazards. Always refer to the safety warnings provided throughout this manual concerning these procedures. When possible, disconnect all electrical power including remote disconnect and discharge all energy storing devices such as capacitors before servicing. Follow proper lockout/tagout procedures to ensure the power can not be inadvertently energized. When necessary to work with live electrical components, have a qualified licensed electrician or other individual who has been trained in handling live electrical components perform these tasks. Failure to follow all of the recommended safety warnings provided, could result in death or serious injury.

Periodic Service

All Maintenance/Service information should be recorded accordingly on the inspection sheet provided in this manual (see "Gas Equipment Start-Up," p. 32).

Note: *The heater and vent system should be checked once a year by a qualified technician.*

⚠WARNING

Hazardous Voltage and Gas!

Turn off the gas supply and disconnect all electric power, including remote disconnects before servicing unit. Follow proper lockout/tagout procedures to ensure the power can not be inadvertently energized and the gas can not be inadvertently turned on. Failure to turn off gas or disconnect power before servicing could result in death or serious injury.

Important: *Gas tightness of the safety shut-off valves must be checked on at least an annual basis.*

⚠WARNING

Hazard of Explosion!

Never use an open flame to detect gas leaks. Explosive conditions may occur. Use a leak test solution or other approved methods for leak testing. Failure to follow recommended safe leak test procedures could result in death or serious injury or equipment or property-only-damage.

To check gas tightness of the safety shut-off valves, turn off the manual valve upstream of the appliance combination control. Remove the 1/8-inch pipe plug on the inlet side of the combination control and connect a manometer to that tapping. Turn the manual valve on to apply pressure to the combination control. Note the pressure reading on the manometer, then turn the valve off. A loss of pressure indicates a leak. If a leak is detected, use a soap solution to check all threaded connections. If no leak is found, combination control is faulty and must be replaced before putting appliance back in service.

Should maintenance be required, perform the following inspection and service routine:

1. Inspect the area near the unit to be sure that there is no combustible material located within the minimum clearance requirements listed in this manual (see "Installation: Mechanical," p. 11 and Table 3, p. 12).

⚠WARNING

Combustible Materials!

Maintain proper clearance between the unit heat exchanger, vent surfaces and combustible materials. Refer to unit nameplate and installation instructions for proper clearances. Improper clearances could result in a fire hazard. Failure to maintain proper clearances could result in death or serious injury or property damage.

2. Turn off the manual gas valve and electrical power to the gas duct furnace.
3. To clean or replace the main burners, remove the bottom panel and compress the spring by moving the burner toward the manifold. Slide the opposite end of the burner downward from the locating slot while retaining spring is still compressed. Pull the burners away from the manifold.
4. With the burners removed, wire brush the inside surfaces of the heat exchanger.
5. Remove any dirt, dust, or other foreign matter from the burners using a wire brush and/or compressed air. Ensure that all parts are unobstructed. Inspect and clean pilot burner if necessary.
6. Reassemble the gas duct furnace by replacing all parts in reverse order.
7. Complete the appropriate unit start-up procedure as given in "Operation," p. 27 (see lighting instruction plate on the access side of the unit).
8. Check the burner adjustment (see "Primary Air Shutter Adjustment," p. 30).
9. Check all gas control valves and pipe connections for leaks.
10. Check the operation of the automatic gas valve by lowering the setting of the thermostat, stopping the operation of the gas duct furnace. The gas valve should close tightly, completely extinguishing the flame on the main burners.
11. Check the operation of the pilot safety device by closing the pilot line valve, extinguishing the pilot flame. Within one minute the automatic gas valve

should close, extinguishing the flame on the main burners.

12. Inspect and service the blower section of the system.
13. Check and test the operational functions of all safety devices supplied with your unit.

Figure 23. Power venter assembly (Power Vented Duct Furnaces only)

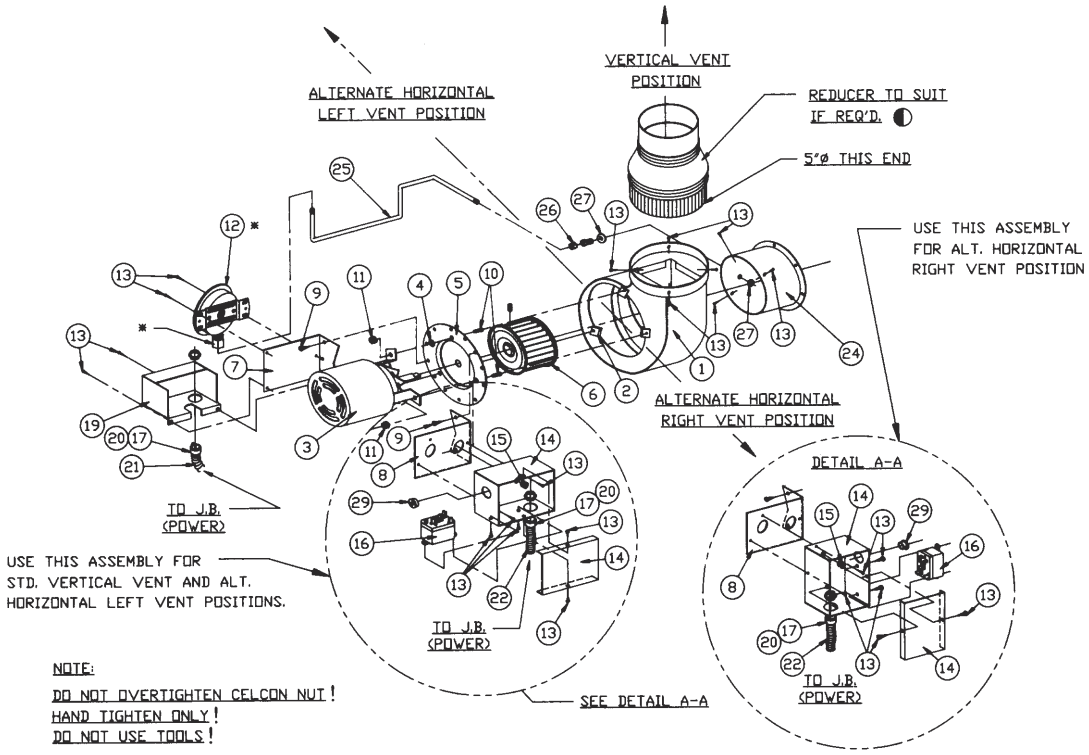

◐ For usage, see Figure 4, p. 9, Figure 5, p. 9, Figure 12, p. 21, Figure 17, p. 24, Figure 19, p. 24, and Table 1, p. 9.

Ref. No.	Description	Ref. No.	Description
1	Blower Housing Assembly	15	Snap Bushing
2	Speed Nut	16	Relay
3	Motor	17	Straight Connector
4	Washer, Plain	19	Shield (Pressure Switch)
5	Plate Adapter	20	Anti-Short
6	Blower Wheel	21	Flex Conduit (23" Long)
7	Mounting Bracket (Pressure Switch)	22	Flex Conduit (24" Long)
8	Mounting Bracket (Junction Box)	23	Slotted Head Machine Screw (L = 7/8")
9	Screw, S.T.	24	Draftor Stack Assembly
10	Screw, Machine (L = 3/4")	25	1/4" Aluminum Tubing
11	Nut, Keps (Ext. Lock Washer)	26	Male Connector
12	Air Pressure Switch	27	Locknut
13	Drill Screw	28	Nut, Keps (Ext. Lockwasher)
14	Junction Box Assembly	29	7/8" Plug

Installation Instructions for Field Replacement of Power Venter Motor

Important: *This replacement must be performed only by a qualified technician.*

Note: *All hardware (screws, nuts, washers) that will be removed from the unit will be reused for this motor replacement. DO NOT LOSE ANY OF THESE PARTS.*

Figure 24. Identification of parts

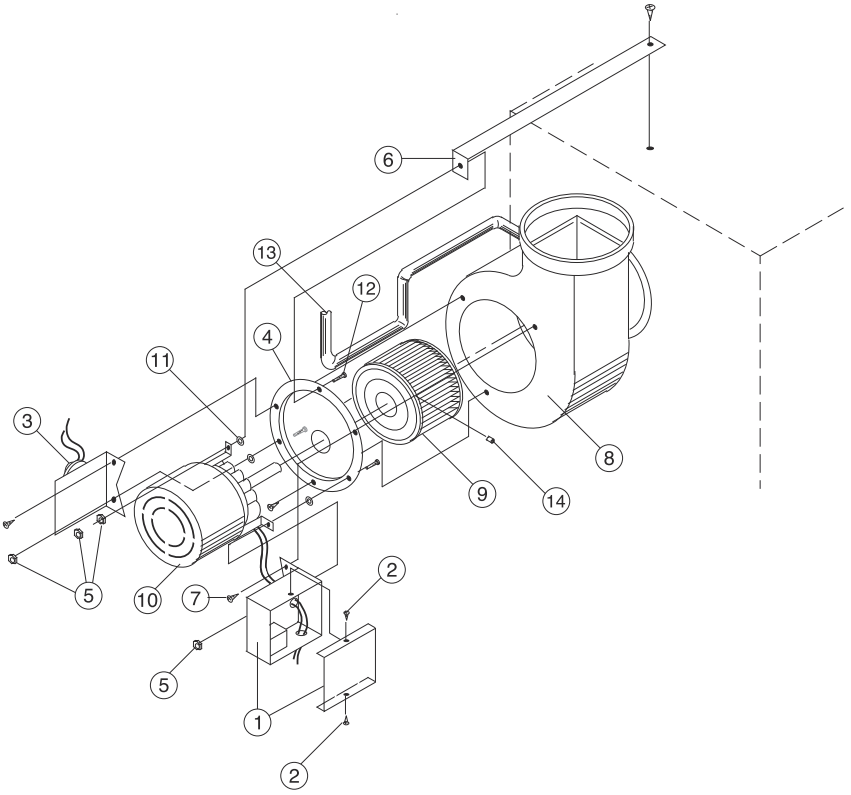

Ref. No.	Description
1	Relay Junction Box/Mounting Bracket Assembly
2	#8 Drill Screws (2 required)
3	Pressure/Mounting Bracket Assembly
4	Mounting Plate Adapter
5	Keps Nut w/External Tooth Lockwasher (4 required)
6	Motor Support Shipping Bracket
7	Phillips Head Screws (3 required)
8	Power Venter Blower Housing
9	Blower Wheel
10	Motor
11	Space Washers (3 required)
12	Machine Screw (3 required)
13	Sensing Tube
14	Set Screw

Tools and Parts Needed

Wire Stripper and Crimper; Slotted Head and #2 Phillips Head Screwdriver; 3/8-in. Wrench; 1/8-in. Allen Wrench (long handle); marker; (1) 1/4-in. push on terminal for Wire.

Notes:

- *Remove the cover from the Relay Junction Box (Item 1) by removing two screws (Item 2) top and bottom. Disconnect both wires from the motor lead ends. One is connected to terminal #4 on the venter relay, and the other is connected with a wire nut to a black wire.*
- *Remove the sensing tube (Item 3) from the Pressure Switch/Mounting Bracket (Item 3) at motor end only. Separated Combustion Units: Remove both tubes at motor end only—note location.*
- *Mark locations of the Relay Junction Box and Pressure Switch Mounting Brackets along with the Motor (Item 10) mounts on the Mounting Adapter Plate (Item 4)—using a marker.*
- *Remove nut (Item 5) that secures the Motor Support Shipping Bracket (Item 6) to the Mounting Adapter Plate. Pull this bracket away from the Motor Mounting Adapter Plate.*
- *Remove three phillips head screws (Item 7) on the Motor mounting Adapter Plate. Remove the Motor/Blower Wheel/Adapter Plate assembly from the Power Venter Blower Housing (Item 8).*
- *Remove the Blower Wheel (Item 9) from the motor shaft by removing the set screw (Item 14) using a 1/8-in. Allen Wrench.*
- *Remove the three Motor Mounting Nuts (Item 5), Space Washers (Item 11), and Screws (Item 12). Do not lose these parts! Using caution—the motor will disengage from the Mounting Adapter Plate, along with the Relay Junction Box and Pressure Switch Mounting Brackets will also disengage.*
- *Reverse order to install the new Power Venter Motor.*
- *TEST FIRE THE UNIT FOR A FEW CYCLES, MAKING SURE THAT THE UNIT IS OPERATING SATISFACTORILY.*

How to Order Replacement Parts

Please send the following information to your local Parts center; If further assistance is needed, contact the manufacturer's customer service department.

- Model number
- Serial Number
- Part description and Number as shown in the Replacement Parts Catalog.

Diagnostics

Troubleshooting

⚠WARNING

Hazardous Service Procedures!

The maintenance and troubleshooting procedures recommended in this section of the manual could result in exposure to electrical, mechanical or other potential safety hazards. Always refer to the safety warnings provided throughout this manual concerning these procedures. When possible, disconnect all electrical power including remote disconnect and discharge all energy storing devices such as capacitors before servicing. Follow proper lockout/tagout procedures to ensure the power can not be inadvertently energized. When necessary to work with live electrical components, have a qualified licensed electrician or other individual who has been trained in handling live electrical components perform these tasks. Failure to follow all of the recommended safety warnings provided, could result in death or serious injury.

Table 9. Troubleshooting guide

Symptoms	Possible Cause(s)	Corrective Action
A. Flame lifting from burner ports.	1. Pressure regulator set too high.	1. Reset manifold pressure. Refer to "Operation," p. 27.
	2. Defective regulator.	2. Replace regulator section of combination gas valve or complete valve.
	3. Burner orifice too large.	3. Check with local gas supplier for proper orifice size and replace. Refer to "Operation," p. 27.
B. Flame pops back.	1. Excessive primary air.	1. Close air shutter. Refer to "Operation," p. 27.
	2. Burner orifice too small.	2. Check with local gas supplier for proper orifice size and replace. Refer to "Operation," p. 27.
C. Noisy flame.	1. Too much primary air.	1. Close air shutter.
	2. Noisy pilot.	2. Reduce pilot gas. Refer to "Operation," p. 27.
	3. Irregular orifice causing whistle or resonance.	3. Replace orifice.
	4. Excessive gas input.	4. Reset manifold pressure. Refer to "Operation," p. 27; Replace regulator section of combination gas valve or complete valve; or check with local gas supplier for proper orifice size and replace. Refer to "Operation," p. 27.
D. Yellow tip flame (some yellow tipping on propane gas is permissible).	1. Insufficient primary air.	1. Open air shutters. Refer to "Operation," p. 27.
	2. Clogged main burner ports.	2. Clean main burner ports.
	3. Misaligned orifices.	3. Replace manifold assembly.
	4. Clogged draft hood.	4. Clean draft hood.
	5. Air shutter linted.	5. Check for dust or lint at air mixer opening and around the air shutter.
	6. Insufficient combustion air.	6. Clean combustion air inlet openings in bottom panel; see "Installation: Piping," p. 16.
E. Floating flame.	1. Blocked venting.	1. Clean flue. Refer to "Installation: Piping," p. 16.
	2. Insufficient combustion air.	2. Clean combustion air inlet openings in bottom panel; see "Installation: Piping," p. 16.
	3. Blocked heat exchanger.	3. Clean heat exchanger.
	4. Air leak into combustion chamber or draft hood.	4. Determine cause and repair accordingly.

Table 9. Troubleshooting guide (continued)

Symptoms	Possible Cause(s)	Corrective Action
F. Gas Odor.	**1. Shut off gas supply immediately!**	**1. Inspect all gas piping and repair.**
	2. Blocked heat exchanger/venting.	2. Clean heat exchanger/flue.
	3. Drafts around heater.	3. Eliminate drafts. Refer to "Installation: Mechanical," p. 11.
	4. Negative pressure in building.	4. See "Installation: Piping," p. 16.
	5. Blocked draft hood.	5. Clean draft hood.
G. Delayed ignition.	1. Excessive primary air.	1. Close air shutter. Refer to "Operation," p. 27.
	2. Main burner ports clogged near pilot.	2. Clean main burner ports.
	3. Pressure regulator set too low.	3. Reset manifold pressure. Refer to "Operation," p. 27.
	4. Pilot decreases in size when main burners come on.	4. Supply piping is inadequately sized. Refer to "Installation: Piping," p. 16.
	5. Pilot flame too small.	5. Clean pilot orifice. Refer to "Operation," p. 27.
	6. Drafts around heater.	6. Eliminate drafts. Refer to "Installation: Mechanical," p. 11.
	7. Improper venting.	7. Refer to "Installation: Piping," p. 16.
H. Failure to ignite.	1. Main gas off.	1. Open all manual gas valves.
	2. Lack of power at unit.	2. Replace fuse or turn on power supply.
	3. Thermostat not calling for heat.	3. Turn up thermostat.
	4. Defective limit switch.	4. Check limit switch with continuity tester. If open, replace limit switch.
	5. Improper thermostat or transformer wiring.	5. Check wiring per diagrams.
	6. Defective gas valve.	6. Replace gas valve.
	7. Defective thermostat.	7. Check thermostat and replace if defective.
	8. Defective transformer.	8. Be sure 115 volts is supplied to the transformer primary, then check for 24 volts at secondary terminal before replacing.
	9. Loose wiring.	9. Check and tighten all wiring connections per diagrams.
	10. Defective ignition control.	10. Replace, if necessary. Also see U, V, and W symptoms.
I. Condensation of water vapor.	1. Improper venting	1. Refer to "Installation: Venting," p. 18.
J. Burner won't turn off.	1. Poor thermostat location.	1. Relocate thermostat away from drafts.
	2. Defective thermostat.	2. Replace thermostat.
	3. Improper thermostat or transformer wiring at gas valve.	3. Check wiring per diagrams.
	4. Short circuit.	4. Check operation at valve. Check for short (such as staples piercing thermostat wiring), and correct.
	5. Defective or sticking gas valve.	5. Replace gas valve.
	6. Excessive gas supply pressure.	6. Refer to "Installation: Piping," p. 16.
K. Rapid burner cycling.	1. Loose electrical connections at gas valve or thermostat.	1. Tighten all electrical connections.
	2. Excessive thermostat heat anticipator.	2. Adjust thermostat heat anticipator for longer cycles. Refer to "Installation: Electrical," p. 25.
	3. Unit cycling on high limit.	3. Check for proper air supply across heat exchanger.
	4. Poor thermostat location.	4. Relocate thermostat. (Do not mount thermostat on unit).
	5. Draft on pilot.	5. Eliminate drafts. Refer to "Installation: Mechanical," p. 11.
	6. Defective ignitor control.	6. Replace ignitor.
	7. Defective high limit switch.	7. Jumper high limit switch terminals 1 and 2. If burner operates normally, replace switch.
L. Noisy power venter.	1. Power venter wheel loose.	1. Replace or tighten.
	2. Power venter wheel dirty.	2. Clean power venter wheel.
	3. Power venter wheel rubbing housing.	3. Realign power venter wheel.
	4. Bearings are dry.	4. Oil bearings on power venter motor. (Refer to label on motor.)
M. Pilot will not light or will not stay lit.	1. Main gas off.	1. Open all manual gas valves.

Table 9. Troubleshooting guide (continued)

Symptoms	Possible Cause(s)	Corrective Action
	2. Pilot adjustment screw turned too low on combination/automatic main gas valve.	2. Refer to "Operation," p. 27.
	3. Air in gas line.	3. Purge air from gas supply.
	4. Incorrect lighting procedure.	4. Follow lighting instruction label adjacent to gas valve.
	5. Dirt in pilot orifice.	5. Remove pilot orifice. Clean with compressed air or solvent. (Do not ream.)
	6. Extremely high or low gas pressure.	6. Refer to "Operation," p. 27.
	7. Defective thermocouple (standing pilot units only).	7. Check thermocouple connection, and replace if defective.
	8. Drafts around unit.	8. Eliminate drafts. Refer to "Installation: Mechanical," p. 11.
	9. Pilot valve not opening (faulty wiring).	9. Inspect and correct all wiring.
	10. No spark (if applicable) (faulty wiring).	10. Inspect and correct ignition system wiring. See symptoms U, V, and W.
	11. Defective gas valve.	11. Replace.
N. Power venter will not run.	1. Loose wiring.	1. Check and tighten all wiring connections per diagrams. Thermostat wires tagged "W" and "G" must be connected together (unless special thermostats are used; if so, see thermostat wiring diagram, "Electrical Connections," p. 25).
	2. Defective motor overload protector or defective motor.	2. Replace motor.
	3. Defective power venter relay.	3. Check for 24V across 1 and 3 terminals on fan relay. If 24V is present, jumper terminals numbered 2 and 4. If motor runs, the fan relay is defective and must be replaced. If 24V is not present, check wiring per diagrams.
O. Power venter motor turns on and off while burner is operating.	1. Fan relay heater element improperly wired.	1. Be sure venter relay heater terminals are connected per diagrams.
	2. Defective venter relay switch.	2. Replace venter relay.
	3. Motor overload protector cycling on and off.	3. Check motor amps against motor name plate rating, check voltage, replace venter relay motor if defective.
	4. Motor not properly oiled.	4. Refer to label on motor.
P. Power venter motor will not stop.	1. Improperly wired venter relay.	1. Check all wiring.
	2. Main burners not lighting while thermostat calls for heat.	2. Refer to H and N symptoms.
	3. Defective venter relay.	3. Replace venter relay.
Q. Not enough heat.	1. Incorrect gas input.	1. Refer to "Operation," p. 27.
	2. Heater undersized.	2. This is especially true when the heated space is enlarged. Have the heat loss calculated and compare to the heater output (80 percent of input). Your gas supplier or installer can furnish this information. If heater is undersized, add additional heaters.
	3. Thermostat malfunction.	3. Replace thermostat.
	4. Heater cycling on limit control.	4. Check air movement through heat exchanger. Check voltage to fan motor. Clean power venter blade and heat exchanger and oil power venter motor.
	5. Check outside dampers if used.	5. Adjust dampers accordingly.
R. Too much heat.	1. Thermostat malfunction.	1. Replace thermostat.
	2. Heater runs continuously.	2. Check wiring per diagrams; check operation at valve. Look for short (such as staples piercing thermostat wiring), and correct; replace gas valve. Refer to "Operation," p. 27.
S. Cold air is delivered on start up.	1. Fan relay heater element improperly wired.	1. Be sure fan relay heater terminals are connected per diagrams.
T. Cold air is delivered during heater operation.	1. Incorrect manifold pressure or input.	1. Refer to "Operation," p. 27.
	2. Voltage to unit too high.	2. Check motor voltage with fan running. Should be 115 volts AC.
	3. Air throughput too high.	3. Refer to "Operation," p. 27.

Table 9. Troubleshooting guide (continued)

Symptoms	Possible Cause(s)	Corrective Action
U. No Spark.	1. Thermostat not calling for heat.	1. Close thermostat contacts.
	2. No low voltage.	2. Check for 24V across 24V terminals of S8600.
	3. Spark gap closed or too wide.	3. Set gap to 0.1.
	4. Broken or cracked ceramic on spark electrode.	4. Replace pilot assembly.
V. Spark present but pilot does not light.	1. Loose S8600 connections.	1. Check all connections, term. PV feeds 24V to pilot valve.
	2. Improper gas pressure.	2. Check pressure—pressure that is either too high or too low may cause a problem.
	3. Is spark in pilot gas stream?	3. Spark should arc from electrode.
	4. No pilot gas — do not use match to test - presence of gas is easily detected by the odor.	4. Check pilot line for kinks. Ensure there are no drafts.
W. Pilot lights — Main valve does not energize.	1. Loose S8600 connections.	1. Check connections-term. MV feeds main valve.
	2. Cracked or broken sensor ceramic.	2. Replace pilot assembly.
	3. Check sensor/spark lead for continuity.	3. Replace if needed.
	4. Measure 24 volts from term. MV to term. MV/PV.	4. If present, replace main valve; if not, replace S8600 Igniter.
X. Hi-Limit switch tripping	1. Vertical run of flue is too short. (Standard unit only—as Category I.)	1. Lengthen vertical run of flue pipe (see “Installation: Venting,” p. 18).
	2. Unit is overfiring.	2. Manifold pressure too high; adjust. Burner orifice may be too large: verify/replace if required.
	3. Air flow too low.	3. Increase air flow; check fan size. Check for proper voltage.
	4. Defective switch.	4. Replace.

Wiring Diagrams

Figure 25. Indoor Gas-Fired Duct Furnace

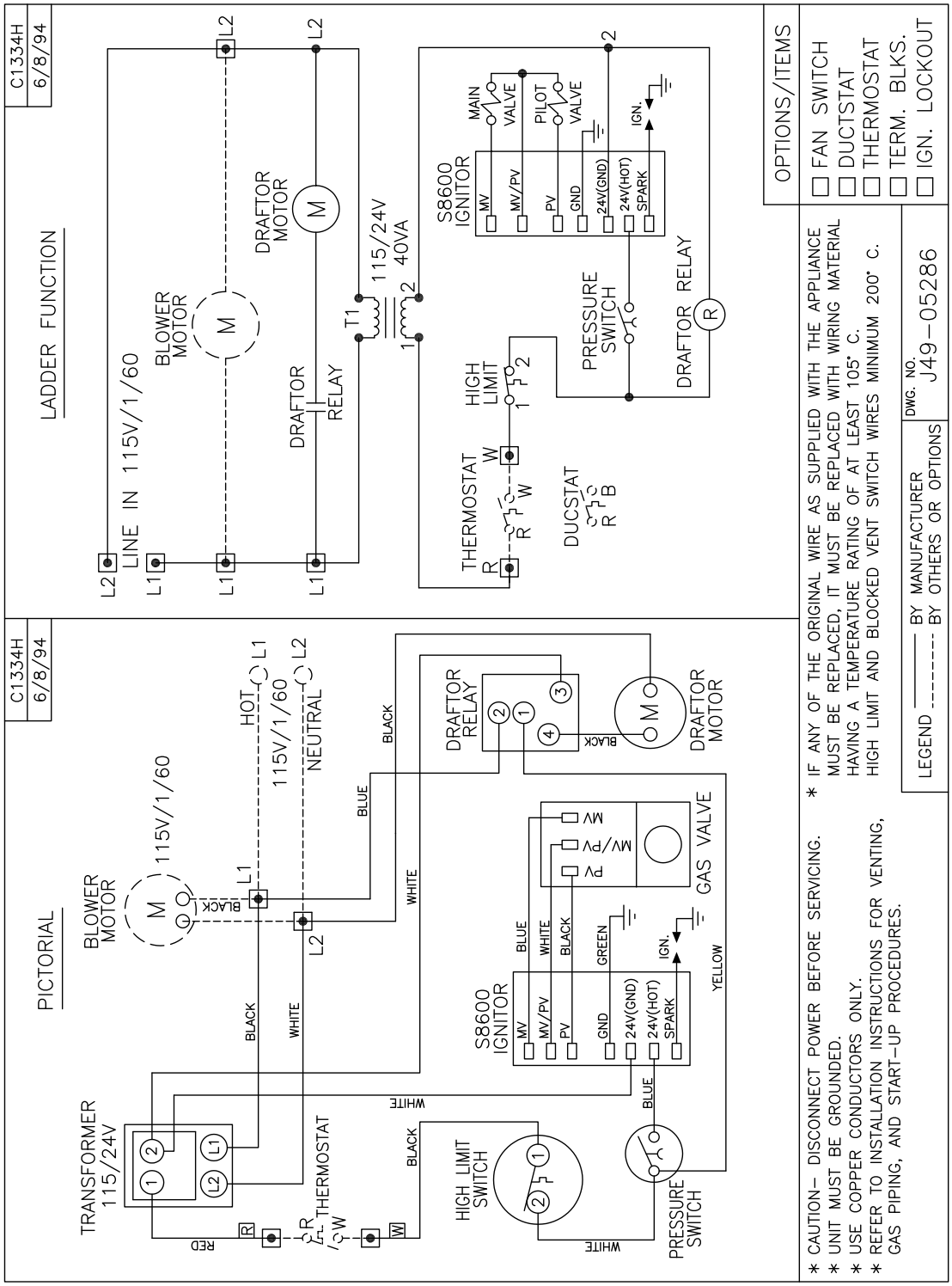



Trane optimizes the performance of homes and buildings around the world. A business of Ingersoll Rand, the leader in creating and sustaining safe, comfortable and energy efficient environments, Trane offers a broad portfolio of advanced controls and HVAC systems, comprehensive building services, and parts.
For more information, visit www.Trane.com.

Trane has a policy of continuous product and product data improvement and reserves the right to change design and specifications without notice.

© 2012 Trane All rights reserved
GLND-SVX01B-EN 16 Mar 2012
Supersedes GLND-SVX01A-EN (01 Mar 2010)

We are committed to using environmentally conscious print practices that reduce waste.

