Product Catalog

Water Source Heat Pump Axiom™ Horizontal/Vertical — GEH/GEV

0.5 to 25 Tons —50/60 Hz

June 2022

WSHP-PRC017U-EN

Introduction

Imagine a full range of comfort utilizing efficiency, sound attenuation, integrated controls, and superior maintenance accessibility.The GEH and GEV models are Trane® water source comfort solutions. The GEH unit is a ceiling hung product that provides serviceability to maintenance components; indoor air quality standards; sound attenuation; and best of all, higher efficiencies rated in accordance to ANSI/AHRI/ASHRAE/ISO13256-1 performance and ASHRAE 90.1 standards. Highlights of these units are included, but not limited to the below items.

Figure 1. GEHE unit (0.5 to 5 tons)

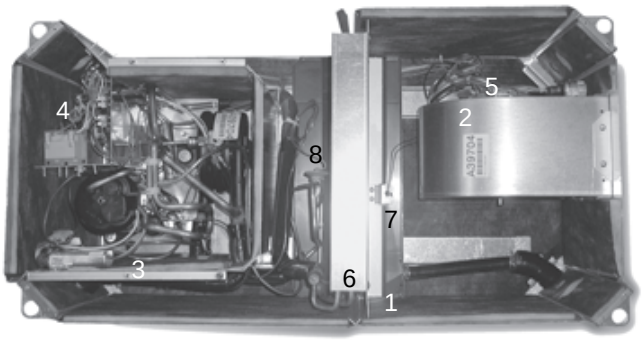

1. Dual-sloped, non-corrosive drain pan
2. Multi-speed motor
3. Insulated enclosure for quiet unit design
4. Integrated controls
5. Orifice ring motor mounting device (standard for ease of motor service)
6. Internal air-to-refrigerant coil (horizontal design)
7. 24V condensate overflow switch
8. TXV

Figure 2. GEVG unit (0.5 to 5 tons)

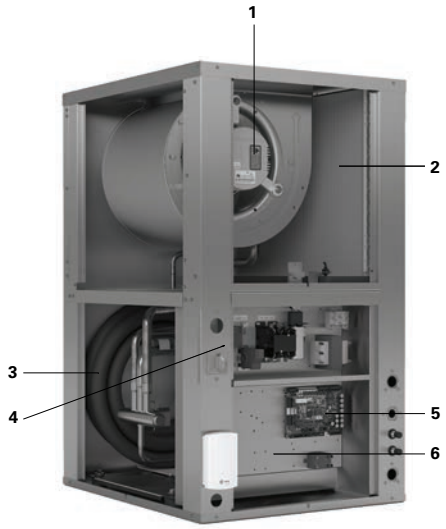

Callout Number in Figure	Description
1	ECM variable speed motor with orifice ring motor mounting device (standard for ease of motor service)
2	Air-to-refrigerant coil (vertical design)
3	Coaxial refrigerant-to-water heat exchanger
4	Unit mounted disconnect switch
5	Trane UC400B controls
6	Drop down control box removable for access to internal unit components

©2022 Trane

Figure 3. GEH unit (10 tons)

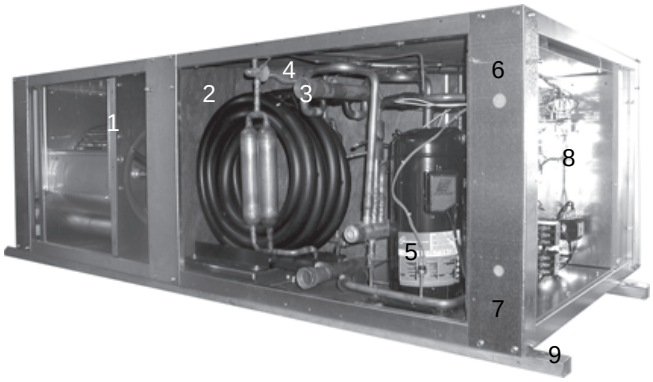

1. Fan blower section
2. Co-axial heat exchanger
3. Water connections
4. Thermal expansion valve
5. Dual compressor
6. Low voltage
7. High voltage
8. Integrated controls
9. Hanging rails

Copyright

This document and the information in it are the property of Trane, and may not be used or reproduced in whole or in part without written permission. Trane reserves the right to revise this publication at any time, and to make changes to its content without obligation to notify any person of such revision or change.

Trademarks

All trademarks referenced in this document are the trademarks of their respective owners.

Revision History

- Updated Dual Filtration section in Features and Benefits chapter.
- Updated Expansion Valve section in Features and Benefits chapter.
- Updated Motorized Water Valve section in Features and Benefits chapter.
- Updated Performance Data chapter.
- Updated Thermostats and Zone Sensors chapter.
- Updated Electrical Data chapter.

Table of Contents

Features and Benefits . . . 7
- Airflow Combinations . . . 7
- Access Panels . . . 8
- Air-Side Filter (0.5 to 25 Tons) . . . 9
- Air to Refrigerant Coil (0.5 to 5 Tons) . . . 9
- Blower Housing . . . 9
- Blower Motor (0.5 to 5 Tons) . . . 10
- Boilerless Control, Electric Heat (Option) . . . 10
- Boilerless Control, Electric Heat System . . . 11
- Factory Mounted and Wired Boilerless Control, Electric Heat . . . 11
- Cabinet Description . . . 11
- Co-axial Water-to-Refrigerant Coil . . . 12
- Compressors . . . 13
- Compressor and Co-axial Coil Isolation (0.5 to 5 Tons) . . . 13
- Drain Pan . . . 13
- Dual Filtration (GEHE 0.5 to 5 Tons) . . . 13
- Ducted Filter Rack (0.5 to 5 tons) . . . 14
- Ducted Panel - Return Air (0.5 to 5 tons) . . . 14
- Expansion Valve . . . 15
- Hanging Device . . . 15
- Hot Gas Reheat . . . 15
- Motorized Water Valve . . . 16
- Pump Module . . . 16
- Refrigerant Piping . . . 17
- Reversing Valve . . . 17
- Schrader Connections . . . 17
- Sound Attenuation Package (0.5 to 5 Tons Units) . . . 17
- Two-Speed Blower Motor (6 to 25 Tons Option) . . . 18
- Water Connections . . . 18
- Waterside Economizer (Option) . . . 19

Application Considerations . . . 21
- Systems . . . 21
- Installation Made Easy (GEH 0.5 to 5 Tons) . . . 26
- Duct Design for Noise Control . . . 27
- Improper Supply Air-Ducting (0.5 to 5 Tons) . . . 27
- Water Flow Control . . . 29

Model Number Description 30
GEV Models 32
General Data 34
Performance Data 38
Cooling and Heating Capacities 0.5 tons 39
Cooling and Heating Capacities 0.75 tons 45
Cooling and Heating Capacities 1 ton 52
Cooling and Heating Capacities 1.25 tons 58
Cooling and Heating Capacities 1.5 tons 65
Cooling and Heating Capacities 2 tons 72
Cooling and Heating Capacities 2.5 tons 79
Cooling and Heating Capacities 3 tons 85
Cooling and Heating Capacities 3.5 tons 92
Cooling and Heating Capacities 4 tons 99
Cooling and Heating Capacities 5 tons 105
Cooling and Heating Capacities 6 tons 112
Cooling and Heating Capacities 7.5 tons 118
Cooling and Heating Capacities 10 tons 123
Cooling and Heating Capacities 12.5 tons 129
Cooling and Heating Capacities 15 tons 135
Cooling and Heating Capacities 20 tons 140
Cooling and Heating Capacities 25 tons 143
Unit Fan Performance 147
ECM Control Board 150
Examples 208
Controls 210
Deluxe 24V Electronic Controls 210
Tracer® Controls 212
Trane® Air-Fi® Wireless Systems 216
Thermostats and Zone Sensors 217
Electrical Data 220
Unit Dimensions 243
Service Clearances 243
Dimensional Data 245

Mechanical Specifications 282
General 282
Air-to-Refrigerant Coil 282
DDC Controller (Option) 282
Deluxe Controls 282
Cabinet 282
Hanging Rod Grommets 283
Compressor 283
Polymer Drain Pan 283
Stainless Steel Drain Pan 283
Economizing Coil 283
Electrical 284
Electric Heat (Option) 284
Filters 284
Hot Gas Reheat (Option) 284
Indoor Fan 284
Single Point Power Connection 285
Dual Point Power Connection 285
ON/OFF Switch (Option) 285
Pump Module (Field Installed Accessory) 285
Refrigerant Circuits 285
Unit Mounted Disconnect (0.5 to 5T Vertical Option) 286
Refrigerant Tubing 286
Reversing Valve 286
Sound Attenuation 286
Water-to-Refrigerant Heat Exchanger 286
Water-to-Refrigerant Heat Exchanger and Suction Lines - Insulated Option 286
Factory Mounted Isolation Valve (Option) 286
Supply and Return Hoses 286
Ball Valves 287
Return Air Duct Panel (Accessory) 287
Two-inch or Four–inch Ducted Filter Rack (Accessory) 287

Features and Benefits

Airflow Combinations

GEH (0.5 to 5 Tons)

The GEH model configuration may be built to order or modified on-site to meet unique installation requirements.

1. Left return-air with left supply-air combination
2. Left return-air with back supply-air combination
3. Left return-air with right supply-air combination
4. Right return-air with left supply-air combination
5. Right return-air with back supply-air combination
6. Right return-air with right supply-air combination

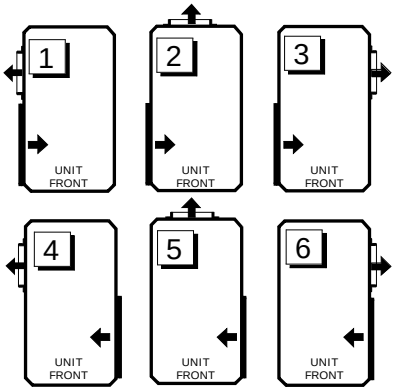

Note: *For configuration #6, it is recommended to order a bottom access filter rack with right return/right supply combination due to a potential problem with return air filter removal.*

GEV (0.5 to 5 Tons)

The GEV model is not capable of on-site modifications. Units must be ordered with the correct return and supply orientation as this cannot be modified in the field.

1. Right return-air with top supply-air combination
2. Right return-air with back supply-air combination
3. Left return-air with top supply -air combination
4. Left return-air with back supply-air combination

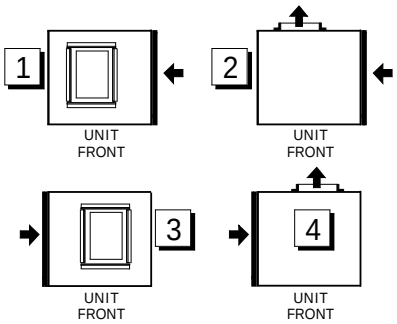

GEH 6 to 15 Tons

The 6 to 15 ton horizontal cabinet airflow flexibility includes the following combinations to aid in applications where the equipment is required to hug a corridor or wall.

The four configurations are:

1. Left return-air with back supply-air combination
2. Left return-air with right supply-air combination
3. Right return-air with back supply-air combination
4. Right return-air with left supply-air combination

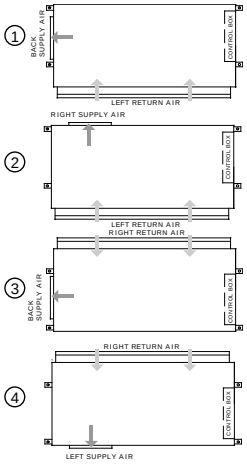

GEV 6 to 25 Tons

The sleek, narrow cabinet of the 6 to 25 ton vertical cabinet is designed to fit through a standard 36 in. doorway for installation during new or retrofit construction. The equipment is available in four supply-air/return-air combinations. These combinations are order specific via the unit model number.

The four configurations are:

1. Front return-air with back supply-air combination
2. Front return-air with top supply-air combination
3. Back return-air with front supply-air combination
4. Back return-air with top supply-air combination

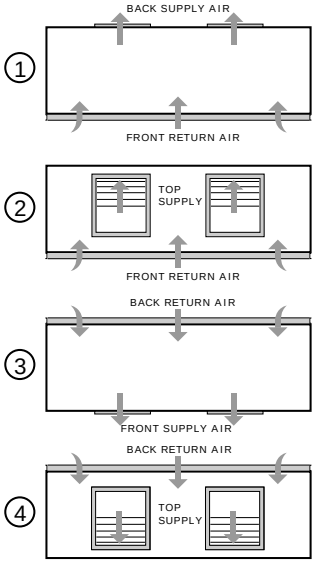

Access Panels

The upper panels of the GEV 12.5 to 25 ton units feature a key hole hanging design for ease of maintenance of the unit, allowing the panel to be hooked into place when attaching the panel to the unit. The panels are also sealed with a rubber gasket at all four edges to help eliminate air from escaping around the panel edge.

Air-Side Filter (0.5 to 25 Tons)

The air-side filter incorporates a 1-inch thick (nominal) or 2-inch thick (nominal), MERV 8 or MERV 13 disposable filter option. Accessory filters are also available in 4-inch (nominal) thickness for MERV 8 and MERV 13. These filters include an average synthetic dust weight tolerance of approximately 75%. This dust holding capability includes a colorless, odorless adhesive to retain dirt particles within the filter media after fiber contact.

Air to Refrigerant Coil (0.5 to 5 Tons)

The air-to-refrigerant heat exchanger is constructed of staggered copper tubes with die-formed corrugated lanced aluminum fins. The fins are then mechanically bonded to the tubes through expansion. The coil is placed internal of the unit design for the horizontal model to provide an optional dual filtration application. With dual filtration to the unit, maintenance to the filter is significantly less than with a single filtration system. This design also offers maximum flexibility of the supply and return air configurations.
The maximum working pressure for the coils is 650 psig. It is designed for maximum capacity with an additional benefit of physical unit size reduction.
Coil specifications may be found in the General Data section of this catalog.

Blower Housing

The blower housing is constructed of non-corrosive galvanized steel. For 0.5 to 5 ton direct drive units, a factory-mounted orifice ring is provided for ease of motor serviceability.

In addition, air-side panels are interchangeable with one another for ease of field convertibility of the supply-air on the GEH model.

For 6 to 25 ton units, the housing is a double wide/double inlet, forward curved wheel moved by an integral horsepower motor with sealed bearings.

Blower Motor (0.5 to 5 Tons)

For GEVG models, the supply-air (blower) motor is an ECM variable speed motor with overload protection (pictured here). For GEHE models, the supply-air (blower) motor is a multi-speed motor with internal thermal overload protection. The motor bearings are permanently lubricated and sealed. The motor is isolated from the fan housing using rubber isolators to minimize vibration transmission. See fan performance tables for static ranges. All motors are factory wired to the option selected. A high, medium, and low speed tap is provided for field modification on most voltages. The speed tap modification can be made in the control box of the unit.

Note: *The 380, 415, 460 and 575 volt designs are provided in a dual or three-speed version only. See fan performance for factory ratings.*

Serviceability to the motor is made through either of the two air-side access doors for the horizontal configuration, and through one air-side access door on vertical configuration. The motor and blower wheel are removable by an orifice ring mounted to the fan housing.

Boilerless Control, Electric Heat (Option)

In cooling dominant regions where heat may be used 15 to 30 days out of the winter season, eliminating the boiler may be an economical advantage to the building owner. Eliminating a boiler from the system reduces costs associated with the mechanical system installation, as well as the maintenance and service of the boiler.

How can heat be provided for the few days of the year when heat is necessary? Through the water-source heat pump of course. The advantage of the water-source heat pump is its ability to provide heat recovery within the closed water-loop. While some WSHPs may be extracting heat from the closed water loop, other WSHPs may be adding heat to the closed water loop. This creates a perfect system balance for heat sharing or movement from one space to another.

But when water temperatures fall in a boilerless system, and no further heat recovery may be made using the closed loop, heat may be added to the space through a boilerless control electric heat option.

For 0.5 to 25 ton units, what is NOT available with the boilerless electric heat option? Hot gas reheat, 115[1] and 575V ratings and supplemental[2] or emergency heat applications and a factory-installed heater[1].

Note: *For 0.5-5T GEVG models, electric heat is not currently available and will follow in a subsequent product update.*

How it Works

In heating mode, when the water temperature falls below 55°F (factory setting), the electric heater is energized, locking out the compressor. The system's electric heat source will continue to be utilized for primary heating until the loop temperature rises above 60°F. Once the entering water temperature rises above 60°F, the boilerless controller returns the unit to normal compressor heating operation and locks out the electric heater. This maximizes efficiency from the unit during the few days requiring heat from the mechanical system.

Note: *For geothermal applications, the boilerless controller has an adjustable setting of 25, 35, 45, 55 and 60°F.*

1. *Only applies to 0.5 to 5 ton GEH/V units.*
2. *Only applies to 6 to 25 ton GEH/V units.*

Boilerless Control, Electric Heat System

For 0.5 to 5 tons units, with the internal boilerless electric heat option, the heat pump encompasses an internal nichrome open wire heating element (factory mounted and wired). It is comprised of a single stage of electric heat designed to operate an electric heater in place of the compressor in the event entering water temperature falls below 55°F or a field adjusted temperature setting between 25°F to 60°F.
For 6 to 25 tons units, with the boilerless electric heat option, the models will contain boilerless controls ONLY to interface for a field provided supplemental electric heat selection. The heater for this model shall be placed external to the equipment by the contractor for ease of installation. All power connections for the electric heater will be completely separate from the unit for field supplied electric heat.

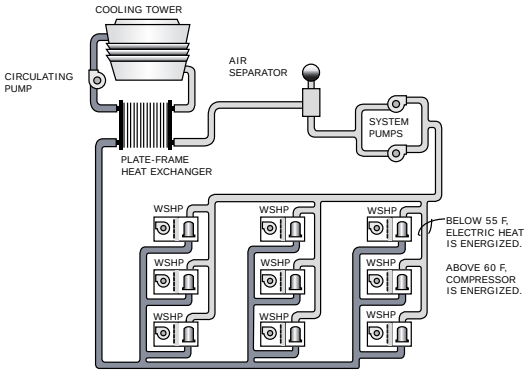

Factory Mounted and Wired Boilerless Control, Electric Heat

A boilerless controls option for field installed electric heat is also available. In this application, the heater shall be placed external to the equipment. All power connections for the electric heater will be completely separate from the unit. The unit contains boilerless controls to interface with the field provided electric heat.

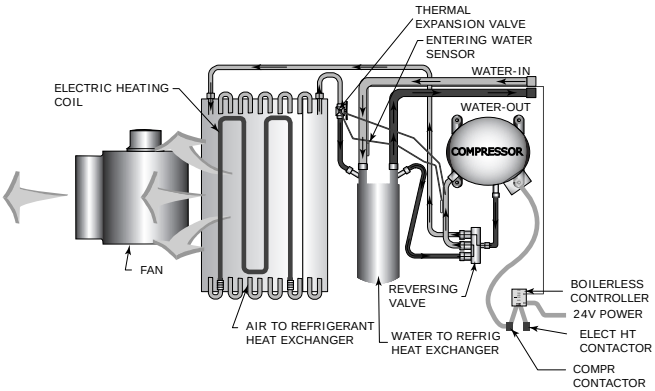

Cabinet Description

The cabinet design contains a platform utilizing similar parts and assemblies throughout the product line. It is constructed of heavy gauge (non-painted), galvanized metal for maximum durability and corrosive resistive exterior.

On the GEH/V 0.5 to 25 tons units, the cabinet front allows service access for the controls. For GEH/V 0.5 to 5 tons models, refrigeration circuitry is accessed through the cabinet front. In addition, water-in/out connection, drain connection and high/low voltage hook-up is accomplished at the 45° chamfered corners on the front-side of the equipment.

For 6 to 15 tons units, hanging the horizontal configuration is accomplished through the robust metal stiffeners located beneath the unit. Optional vibration isolators are available to help decrease sound vibration during equipment operation.

GEH Cabinet (0.5 to 5 Tons)

There are six product variations of return-air and supply-air combinations which may be order-specific or job-site modified.

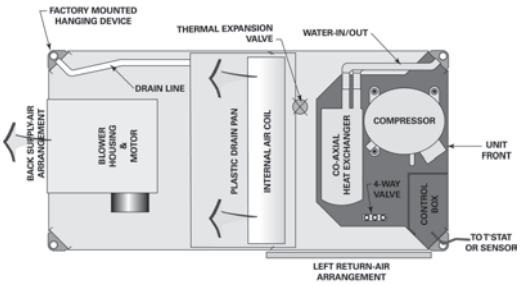

GEV Cabinet (0.5 to 5 Tons)

The vertical design offers four product variations of return-air and supply-air combinations. These are factory options for made to order unit construction.

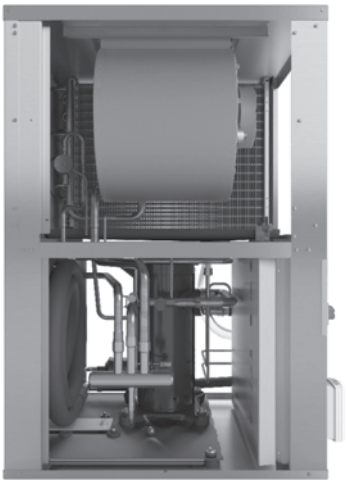

Cabinet Insulation

The cabinet insulation design meets UL 181 requirements. The air-stream surface of the insulation is fabricated of a non-biodegradable source.

Co-axial Water-to-Refrigerant Coil

The unit's internal heat exchanging water coil is engineered for maximum heat transfer. The copper or cupro-nickel seamless tubing is a tube within a tube design. The inner-water tube contains a deep fluted curve to enhance heat transfer and minimize fouling and scaling. It is available in either copper or cupro-nickel (selectable option) coil. The outer refrigerant gas tube is made from steel material. The coil is leak tested to assure there is no cross leakage between the water tube and the refrigerant gas (steel tube) coil. Co-axial heat exchangers are more tolerant to freeze rupture.

Compressors

The unit's design includes a wide variety of compressor motors to accommodate dedicated voltages and tonnage sizes.
The 0.5 to 1.5 tons products have a rotary compressor design. The scroll compressor design is used in 2 to 5 tons units.
In 6 to 25 ton units, dual circuit designs of the GEH and GEV models feature scroll compressors. The compressors are highly efficient and incorporate external vibration isolators and thermal overload protection.
These different styles allow Trane to provide the voltage variations along with noise reduction required in today's applications.

Compressor and Co-axial Coil Isolation (0.5 to 5 Tons)

Vibration isolation of the compressor and co-axial water coil is accomplished by increasing the rigidity and stiffness at the base. The platform provides double isolation to the compressor and the co-axial water coil for additional attenuation during compressor start and stop.

Drain Pan

The unit drain pan is composed of polymer material. The pan is positively sloped to comply with ASHRAE 62 for (IAQ) indoor air quality conformity. Optional stainless steel drain pans are also available.
Access to the drain pan is provided through two access panels for cleaning purposes.

Dual Filtration (GEHE 0.5 to 5 Tons)

Flexibility of the GEHE allows for dual filtration in a free return application. With the field installed dual filtration accessory, filter maintenance of the unit is significantly less.
The accessory package includes both the bottom and top filter rack, and one, 1-inch or 2-inch filter. Table 1, p. 13 provides dual filtration accessory numbers appropriate to unit size.

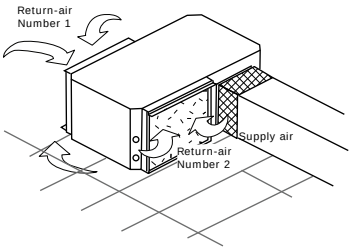

Table 1. Dual filter accessory kit numbers - 0.5 to 5 tons

Unit size	1 in. filter kit part no.	2 in. filter kit part no.
(GEHE) 006-015	4474 0630 0100	4474 0634 0100
(GEHE) 018-030	4474 5629 0100	4474 5630 0100
(GEHE) 035-042	4474 0632 0100	4474 0636 0100
(GEHE) 048-060	4474 0633 0100	4474 0637 0100

Ducted Filter Rack (0.5 to 5 tons)

When it is necessary to have filter access at the unit in a ducted return, a ducted filter rack is available. This option allows access to the filter at the unit. Vertical unit filter racks are available in right or left access configurations. Horizontal units are available in top, bottom or side access configurations.

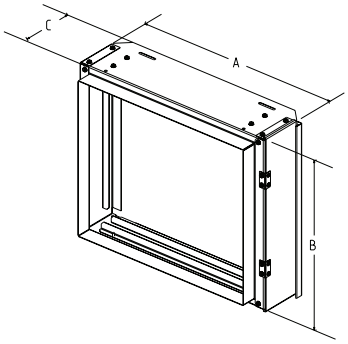

Table 2. Ducted filter opening size - 0.5 to 5 tons

Unit Size	A (in.)	B (in.)	C (in.)
GEHE 006-015	21.1	15.4	5.4
GEHE 018-030	24.5	18.4	5.6
GEHE 035-042	26.4	19.4	5.5
GEHE 048-060	30.7	21.4	5.5
GEVG 006-012	16.5	14.25	6.6
GEVG 015–018	19.0	16.25	6.6
GEVG 024–030	20.5	17.25	6.6
GEVG 036–042	23.5	18.5	6.6
GEVG 048-060	30	20.25	6.6

Note: *All dimensions in inches. GEVG dimensions are for accessory 2 or 4" Filter Rack.*

Ducted Panel - Return Air (0.5 to 5 tons)

The return-air arrangement may be easily converted from a free return-air system, to a ducted return-air system with the addition of a return-air side panel. By replacing the filter racks with the return-air panel, a complete seal from the duct to the unit is possible. The 1.5 in. duct flange facilitates ease of field connection to the duct system. This accessory is typically used when the return-air filter is placed in a built-in ceiling grille, or placed within a field provided filter rack assembly.

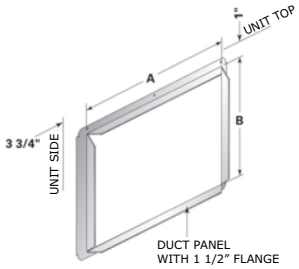

Table 3. Ducted panel - return air (0.5 to 5 tons)

Unit size (60 Hz)	A (in.)	B (in.)	Duct Collar Part Number
GEHE006–015	17.5	13	447411330100
GEHE018-030	20.5	16	447456280100
GEHE035-042	22.5	17	447411350100
GEHE048-060	26.5	19	447411360100

Table 4. Ducted panel - return air GEVG

Unit size (60 Hz)	A (in.)	B (in.)	Duct Collar Part Number
GEVG006–012	16.00	14.50	WSHPPND00001
GEVG015–018	18.50	16.50	WSHPPND00002
GEVG024–030	20.00	1.50	WSHPPND00003
GEVG036–042	23.00	18.50	WSHPPND00004
GEVG048–060	29.50	20.50	WSHPPND00005

Expansion Valve

The refrigerant flow metering is made through the thermal expansion valve (TXV).
It allows the unit to operate with an entering fluid temperature from 25°F to 110°F[3] and entering air temperatures from 55°F to 85°F.
The valve is designed to meter refrigerant flow through the circuitry to achieve desired heating or cooling.
Unlike cap-tube assemblies, the expansion valve device allows the exact amount of refrigerant required to meet the coil load demands. This precise metering by the TXV increases the efficiency of the unit and eliminates the need for a water regulating valve.

Hanging Device

The hanging bracket resides in the chamfered corner of the horizontal 0.5 to 5 ton equipment. This partially-concealed bracket design eliminates added height, width, or length to the product. The brackets are factory mounted to shorten job installation requirements. The 0.5 to 5 ton unit is shown to the left.
The structural integrity of the design helps assure no bracket deflection or unit bowing from the unit's weight.
Isolation for the hanging bracket is provided with a neoprene rubber grommet design.
The grommets are a separately ordered accessory on the GEH 6 to 15 tons models. A grommet kit (KIT15407) containing four grommets can be ordered if desired.
This isolation device helps prevent sound vibration from reaching the structural support members of the building during compressor start and stop.
The hanging channel for the horizontal unit (GEH 6 to 15 tons) runs the length of the equipment.

Hot Gas Reheat

For space conditioning and climate control, Trane provides an accurate and cost effective dehumidification control through a hot gas reheat option.

With this reheat option, the return air from the space is conditioned by the air-to-refrigerant coil, then reheated by the reheat coil to control not only the space temperature, but to also reduce the relative humidity of the space. The moisture removal capability of a specific heat pump is determined by the units latent capacity rating.

3. *120°F applicable to GEH/V 6 to 25 ton units*

When operating in the reheat mode (meaning the sensible temperature has been met in the space), the humidistat signals the reheat relay coil to energize, allowing the high pressure refrigerant gas to flow from the compressor, through the reheat valve, into the reversing valve, and through the reheat coil for dehumidification.

Note: *GEH/V 0.5 to 5 tons image shown to the right.*

Trane places an air separation space between the air-to-refrigerant coil, and the reheat coil to allow for maximum moisture removal.

For 0.5 to 5 ton horizontal units with UC400, a switching relay has been provided for the reheat application to adjust the blower motor from normal operation to low speed when hot gas reheat is energized.

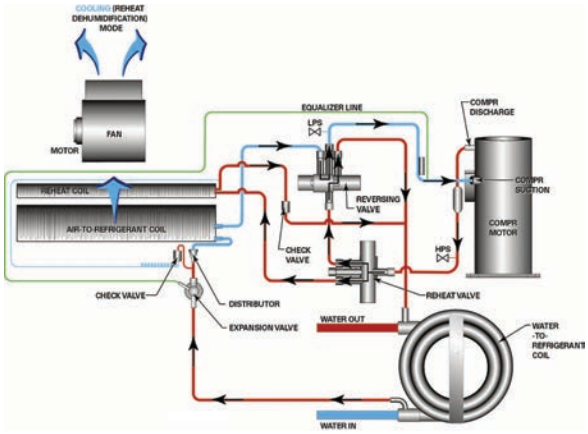

Hot Gas Reheat - Applications

The hot gas reheat option is designed to support building applications requiring fresh-air ventilation units delivering unconditioned-air directly to the space. It also provides dehumidification to large latent load spaces such as auditoriums, theaters and classrooms, or anywhere humidity control is a problem.

Hot Gas Reheat - Design

Water-source heat pumps with hot gas reheat should not be used as a make-up air unit.

A high-static blower motor option will be required to support the hot gas reheat option for the 0.5-5 tons horizontal equipment.

Water regulating valves should not be used with the hot gas reheat option. Trane places a thermal expansion valve on all water-source heat pumps, as well as ground-source heat pumps, to regulate refrigerant flow vs. water flow, making the heat pump more efficient to run.

Motorized Water Valve

The two-position motorized water valve is installed on the return line of the water loop system between the loop and the loop's pump module.

When the compressor begins running, the two-position valve will open, allowing water to flow through the unit. As the compressor shuts down, the valve slowly closes off. The main purpose of the motorized valve is to shut-off the flow of water through the unit when the unit is off, thus reducing pump energy consumption. The two-position motorized valve is fast opening to prevent compressor trip-out, and slow closing to prevent water hammer.

Pump Module

The pump module and hose kit make a complete self-contained pumping package for distributed pumping systems. These kits contain all the necessary components for the installation, operation and maintenance of the water circuit of a closed loop geothermal application. Standard pump module features include insulated Grundfos pumps, insulated cabinet or cast iron pump, and 3-way brass valves. Literature number WSHP-SVN001–EN will provide electrical and dimensional requirements for the PMCA products.

Pump Module Hose Kit

The pump module hose kit consists of two brass, 3/4 in. or 1 in., male pipe thread (MPT)-by-barb fittings; two brass 90° 1-inch, MPT-by-barb elbows with pressure/ temperature ports; and 10 ft of rubber hose with 4 hose clamps. The pump module hose kit is available separately from the pump module.

Refrigerant Piping

The unit's copper tubing is created from a 99% pure copper formation that conforms to the American Society of Testing (ASTM) B743 for seamless, light-annealed processing.

The unit's copper refrigeration system is designed to be free from contaminants and conditions such as drilling fragments, dirt, or oil. This excludes the possibility of these contaminants from damaging the compressor motor.

Reversing Valve

A system reversing valve (4-way valve) is included with all heating/ cooling units. This valve is piped to be energized in the cooling mode to allow the system to provide heat if valve failure were to occur. Once the valve is energized for cooling, it will remain energized until the control system is turned to the **"OFF"** position, or a heating cycle is initiated.

Schrader Connections

For 0.5 to 5 tons vertical units, the Schrader/CoreMax® connections are located adjacent to the unit control box. For 6 to 25 tons and 0.5 to 5 tons horizontal units, these connections are brazed to the suction and the discharge lines.

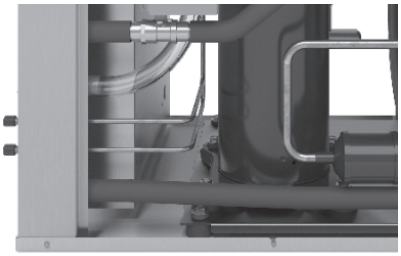

Sound Attenuation Package (0.5 to 5 Tons Units)

Testing of conventional units has identified that the sound radiated by the casing of the unit is an important component of the sound that reaches occupants, especially when the unit is located directly over the occupied space.

This sound reduction package reduces radiated noise from the cabinet. Trane® double-isolates the compressor and single-isolates the co-axial coil in the unit. This design absorbs the vibration that contributes to radiated sound. For sound critical spaces, an enhanced sound package as described in the following table provides additional attenuation.

Table 5. Sound package

Standard Sound Attenuation Package	Deluxe Sound Attenuation Package (Option)
18-gauge compressor enclosure (GEHE only)	16-gauge compressor enclosure
20-gauge single wall front panel	16-gauge single wall front panel
lined compressor enclosure with 1/2-inch cabinet insulation	lined compressor enclosure with 1/2-inch cabinet insulation
14-gauge compressor/water-to-refrigerant heat exchanger pan with second stage of vibration isolation	14-gauge compressor/water-to-refrigerant heat exchanger pan with second stage of vibration isolation
compressor double vibration isolation	compressor double vibration isolation
water-to-refrigerant heat exchanger vibration isolation	water-to-refrigerant heat exchanger vibration isolation
lengthwise unit base stiffeners (GEHE only)	lengthwise unit base stiffeners
	3/32-inch foam gasket sealant placed around the perimeter

Two-Speed Blower Motor (6 to 25 Tons Option)

The 6 to 25 tons GEH/V models have indoor blowers that are available with 2 speed motors, selectable in the model number (Digit 12, drive packages 1-9). High speed airflow matches the single speed motor airflow, referenced in the fan performance tables. Low fan speed airflow is approximately 50% of high fan speed airflow.

The 6 to 25 tons GEH/V 2 speed blower motors are available with the following options: deluxe 24V or UC400 controls, heat pump or heat pump w/ hot gas reheat or heat pump w/ waterside economizer. Not available with boilerless or supplemental electric heat.

Table 6. 6 to 25 tons GEH/V fan speed for 2 speed drive packages 1 to 9

RV State	Fan	Compressor 1	Compressor 2	Fan Speed
Heat	OFF	OFF	OFF	OFF
Heat	ON	OFF	OFF	LOW
Heat	ON	ON	OFF	HIGH
Heat	ON	ON	ON	HIGH
Cool	OFF	OFF	OFF	OFF
Cool	ON	OFF	OFF	LOW
Cool	ON	ON	OFF	LOW
Cool	ON	ON	ON	HIGH

Water Connections

0.5 to 5 Tons

The water-in/water-out connections to the co-axial water coil are located on the right-hand corner of the unit. The fittings are mounted flush to the wall to help limit shipping damage.
The water connection devices are constructed of copper material and include a National Female Pipe Thread (NFPT) junction. The connections are attached to the unit's corner to alleviate the need for a back-up wrench during installation.

6 to 25 Tons

Water hookups for the 6 to 25 tons units are located internal to the equipment to help alleviate damage to the water copper during shipment or job storage of units prior to installation. Each unit (although dual circuit) contains a single supply and return water connection. The figure provides large tonnage water hook-up information for model GEV.

1. Water-out
2. Drain
3. Water-in

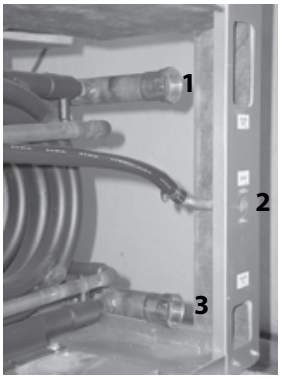

Waterside Economizer (Option)

The beauty of the waterside economizer is its ability to take advantage of any loop condition that results in cool water temperatures. A prime example would be during fall, winter and spring when cooling towers have more capacity than required and could be controlled to lower temperatures for economizer support.

Another more common inexpensive means of free comfort cooling includes buildings systems where perimeter heating and core cooling are needed. In this system, the perimeter units extract heat from the building loop while in the heating mode, forcing the building loop temperature to drop. Where as, the core are of a building may require cooling in summer or in winter based upon lighting, people and equipment.

Waterside Economizer Package

The waterside economizer is available on all 0.5 to 15 ton GEH models and 0.5 to 25 GEV models.
0.5 to 5 ton GEH model shown.

Note: *Condensate overflow protection for the waterside economizer coil is field provided.*

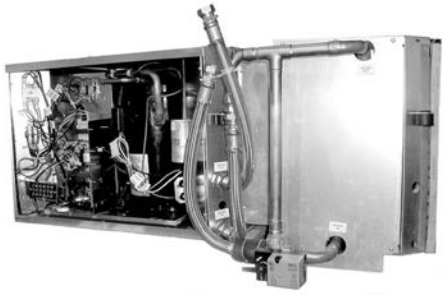

Waterside Economizer System (0.5 to 25 Tons)

If the water-source system design contains an economizing coil option, the moderate temperature loop water circulated through a core water-source system can provide an inexpensive means to satisfy room comfort without operating the water-source heat pump's compressor.
During economizer mode, fluid enters the unit, and passes by a water temperature sensing bulb. This temperature sensing bulb determines whether the two position, three-way valve will direct the water through the waterside economizing coil, and to the heat pump condenser, or through the condenser only. If the water temperature is 55°F or less, fluid will flow into the economizing coil, while simultaneously halting mechanical operation of the compressor. Mechanical cooling will continue on a call for second stage from the thermostat.

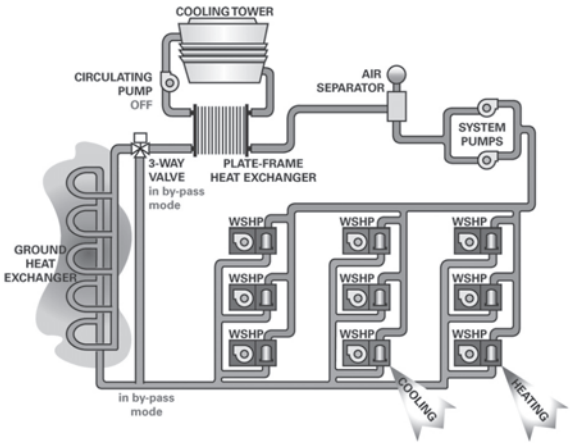

Application Considerations

Systems

Water-source heat pump systems are used to provide comfort in a wide range of building types and climates. The system utilizes energy-conserving, heat-recovery capabilities to transfer heat from one area to another to meet individual zone requirements. When used with system design and control strategies, these high-performance systems reduce operating costs for the building owner and improving occupant comfort.

Heat pump units are available in many different configurations and the design simplicity can be adapted to suit almost any building plan. The vertical and horizontal water-source heat pump system is versatile for installation in a boiler/cooling tower applications, as well as ground source (geothermal) applications.

Figure 4. Conventional water-source heat pump system

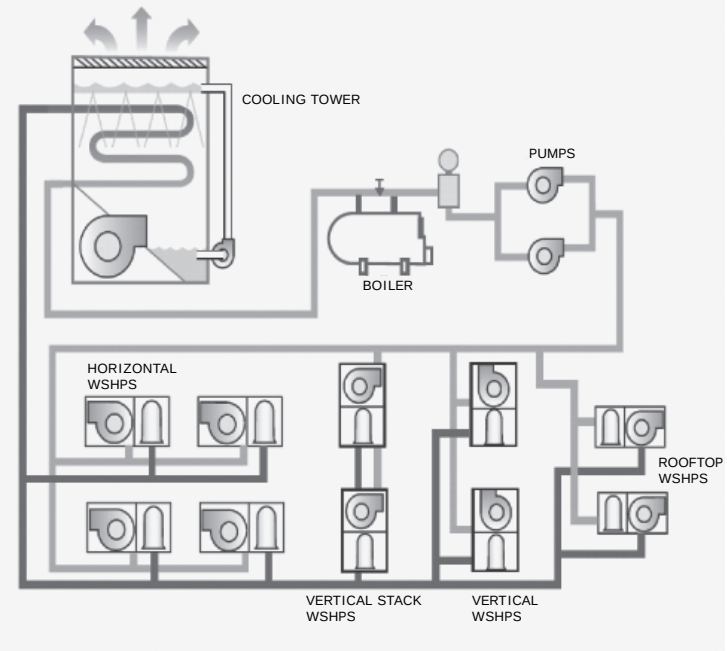

Boiler/Cooling Tower

In this type of system, units are distributed throughout the building to provide cooling and heating to the space. Units are connected to a water distribution loop which circulated water throughout the building to transfer heat from one area to another. This common water loop yields what is essentially a heat-recovery system. Units providing heating extract heat from loop water while units providing cooling reject heat to the loop. In effect the system recovers and redistributes heat where needed.

Also connected to this water loop are a heat rejecter such as a cooling tower, a heat adder such as a boiler, circulation pumps, and related accessories. Typically, outdoor air is conditioned and delivered by a separate, dedicated ventilation system.

During warm weather when all or most of the units are cooling, the cooling tower is used to dissipate heat from the condensing process. The condensing water is cooled for recirculation back to the water-to-refrigerant heat exchanger by using a combination of heat and mass transfer by evaporation.

A boiler is also used to add heat to the water loop during winter months when most units are heating. The boiler is typically enabled when the water loop temperature falls to a minimum value.

During moderate weather, such as spring or fall, the heat pumps serving the sunny side and interior of the building often operate in cooling mode and reject heat into the water loop. The heat pumps serving the shady side of the building often operate in heating mode and absorb heat from the water loop.

Heat rejected by the units operating in cooling mode is used to offset the heat absorbed by the units in heating mode. In this manner, a WSHP system provides a form of heat recovery and an opportunity to

save energy by reducing the need to operate the boiler or cooling tower. For example, if the water temperature stays in the desired range-between 60ºF (16ºC) and 90ºF (32ºC)-neither the boiler nor the cooling tower need to operate.

In applications such as office buildings, heat generated by lights, people, and office equipment often results in the need to provide year-round cooling in the interior zones of the building. In these applications, the benefit of this heat recovery further reduces boiler energy use during the winter months.

Ground Source

The advantages of a geothermal heat pump system can potentially minimize heating and cooling cost by 30 to 40 percent. In this application the cooling tower and boiler are replaced with a ground heat exchanger. The ground heat exchanger is a series of pipes buried in the earth. The earth is used as an energy storage tank. Ground-source heat pump systems offer the potential for saving energy because they can reduce (or eliminate) the energy needed to operate a cooling tower and/or boiler. Eliminating the cooling tower has architectural and maintenance advantages, and eliminating the boiler frees up floor space in the building.

Figure 5. Ground source heat pump system

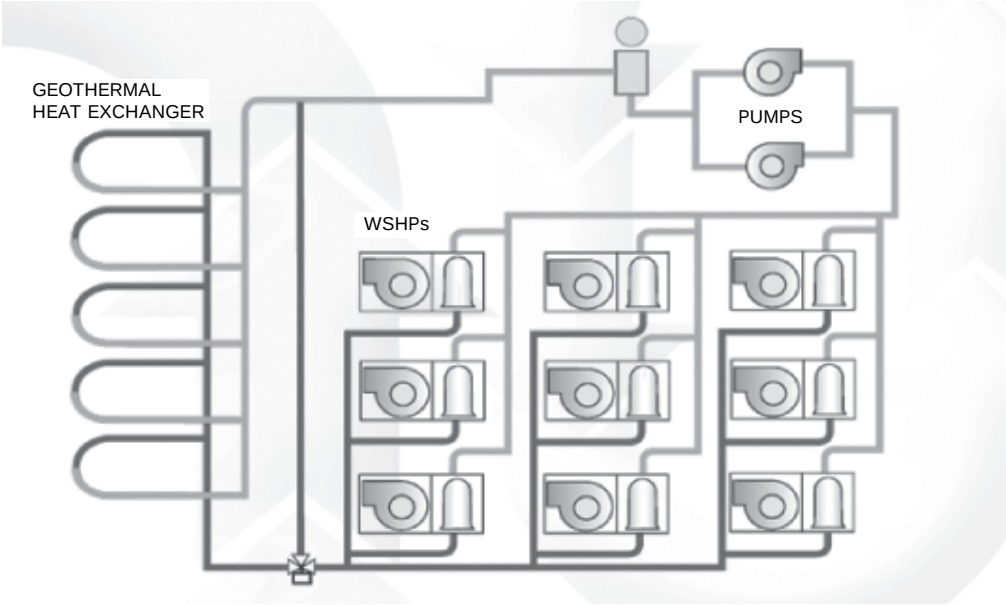

The fluctuating temperatures of fluid from the earth are more stable than air, allowing the equipment to operate at a lower discharge pressure and use fewer kilowatts. The constant earth temperature will heat or cool the fluid running through buried high density polyethylene pipe to provide heating and cooling to a building.

A geothermal loop can be installed either horizontally or vertically. Vertical loops require less overall land area to reject (i.e., sink) the excess heat from the building. Horizontal loops require trenches in the ground spanning a larger overall land area.

Although external piping is the responsibility of the installer and/or piping manufacturer, many electric utilities and rural electric cooperatives are offering monetary incentives to install geothermal systems. Utility companies offer the incentives because of reduced peak loads that flatten out their demand curve over time, and save them money. These savings are ultimately transferred to the consumer.

Hybrid Systems

Hybrid systems involve adding a small cooling tower or dry cooler to a ground source system that is installed in a cooling -dominated climate or adding a small boiler to a system in a heating-dominated climate. In either case, the geothermal heat exchanger is sized based on the smaller of the two loads: for the total heat absorbed in a cooling-dominated climate or the total heat rejected in a heating-dominated climate. Then, a small cooling tower (or boiler) is added to reject (or add) the remaining heat.

A hybrid system may also be used in existing buildings with existing ground loops as additional rooms or buildings are added to the system. A cooling tower may be the solution to off-load the peak demand of the new building addition as an example. Other additions may include a requirement for fresh-air ventilation. A fresh-air, air handler, along with a water to water unit may be introduced to the closed loop system to allow tempered fresh-air into the building.

The buildings heating and cooling needs are not based off of one type of component, but perform harmonious of each other. Heat recovery from the loop itself can be shared with the other major components.

Hybrid systems can often make the system more economical, opening up the possibility to reap the potential energy savings.

Figure 6. Hybrid system

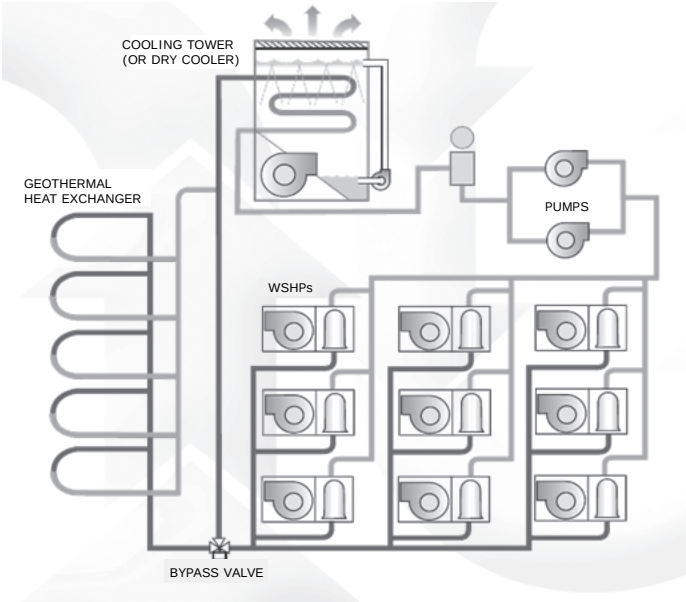

Figure 7. Central pumping system

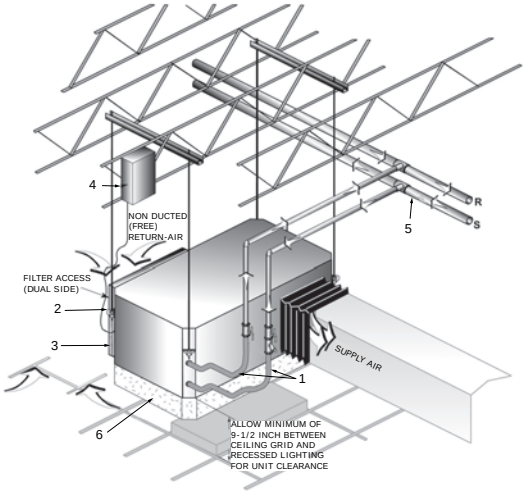

Units that employ a central pumping system contain single or dual pumps to fulfill pumping requirements for the entire building system.

The central system's supply and return lines should be sized to handle the required flow with a minimum pressure drop.

The water-source heat pump (GEH) may include add-on accessories to help aid in system balancing, acoustics and safety requirements. Some of these items may be ordered from the factory, then field installed. Many are provided by the contractor.

- Hose kits (item 1) are used to connect the water supply and return line to the water inlets and outlets. Trane offers various hose kit combinations to better facilitate system flow balancing. These flexible hoses also aid in the reduction of vibration between the unit and the rigid central piping system.
- A two position isolation valve is often applied to systems which incorporate variable frequency pumping. This valve is capable of stopping/starting water flow to the unit, which in-turn reduces the pumping requirements for the entire system.
- The unit's (item 2) 3/4-inch high voltage and (item 3) 0.5-inch low voltage connections are located on the left chamfered corner of the unit. They are designed to accept conduit.
- A field supplied line voltage disconnect (item 4) should be installed for branch circuit protection. Check local codes for requirements.
- The central system supply and return lines (item 5) should be sized to handle the required flow with a minimum pressure drop.

  Note: *Pipe will sweat if low temperature water is below the dew point of the surrounding space. Trane recommends that these lines be insulated to prevent damage from condensation when condenser loop is designed to be below 60°F. Equipment installed in attic/crawl space temperatures below 40°F may require antifreeze in the water loop.*
- For acoustically sensitive areas, a six-inch deep fiberglass insulation (item 6) is recommended to be field installed below the horizontal unit. This field supplied insulation should be approximately twice the footprint size of the unit. It provides sound damping of the unit while in operation.

Figure 8. Distributed pumping system

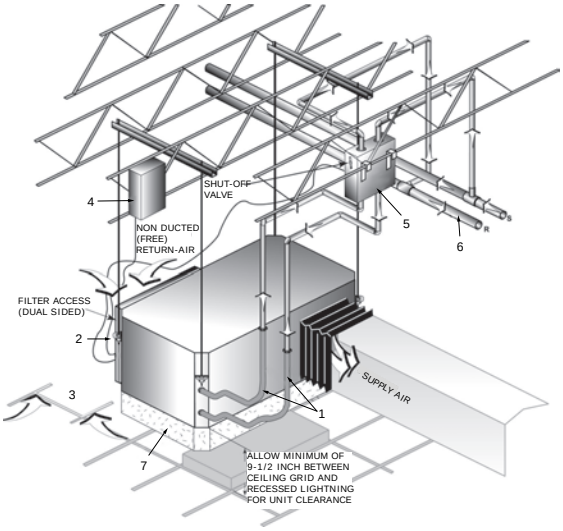

A distributed pumping system contains either a single or dual pump module, specifically sized for each water-source heat pump, then connected directly to the units supply and return lines.
The distributed system's supply and return lines should be sized to handle the required flow with a minimum pressure drop.

- Hose kits (item 1) are used to connect the water supply and return line to the water inlets and outlets. Trane offers various hose kit combinations to better facilitate system flow balancing. These flexible hoses also aid in the reduction of vibration between the unit and the rigid central piping system.
- The unit's (item 2) 3/4-inch high voltage and (item 3) .5-inch low voltage connections are located on the left chamfered corner of the unit. They are designed to accept conduit.
- A field supplied line voltage disconnect (item 4) should be installed for branch circuit protection. Check local codes for requirements.
- Trane's self-contained pump module (item 5) and hose kit make a complete pumping package for distributed pumping systems. The module is designed for circulating commercial loops that require a maximum flow rate of 20 gpm. Each pump module is fully assembled for connection to water and electrical points. The kit contains all of the necessary components for the installation, operation and maintenance of a closed loop application. See WSHPC-IN-5 (72-9006-03) for electrical and dimensional requirements
- The distributed pumping system supply and return lines (item 6) should be sized to handle the required flow with a minimum pressure drop.

  Note: *Pipe will sweat if low temperature water is below the dew point of the surrounding space. Trane recommends that these lines be insulated to prevent damage from condensation when condenser loop is designed to be below 60°F. Equipment installed in attic/crawl space temperatures below 40°F may require antifreeze in the water loop.*
- For acoustically sensitive areas, a six-inch deep fiberglass insulation (item 7) is recommended to be field installed below the horizontal unit. This field supplied insulation should be approximately twice the footprint size of the unit. It provides sound damping of the unit while in operation.

Figure 9. Installation of the 0.5 to 5 tons vertical

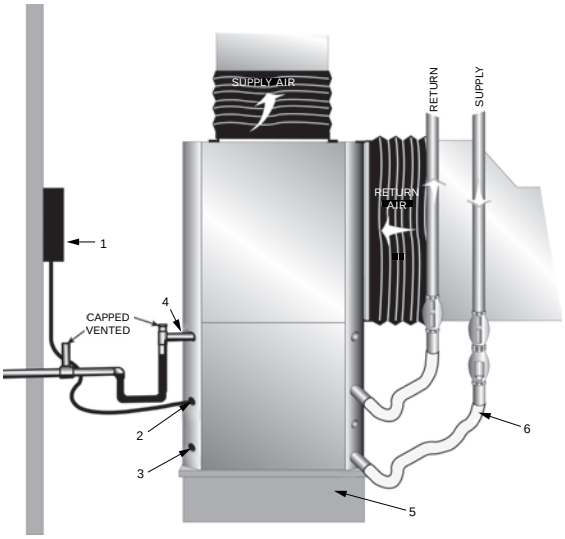

Whether securing the 0.5 to 5 tons GEVG to a central pumping system, or a distributed pumping system, Trane recommends a few accessory considerations to the system installation.

- The field supplied line voltage disconnect (1) should be installed for branch circuit protection.
- The units (2) 3/4-inch high voltage and (3) 0.5-inch low voltage connections are located on the left corner of the unit. They are designed to accept conduit.
- Trane recommends that the condensate system (4) be set-up per negative pressure trapping in consideration of the unit's draw-through design. With this properly trapped system, when condensate forms during normal operation, the water level in the trap rises until there is a constant outflow. Refer to the Axiom™ Installation and Operations manual for negative pressure trapping guidelines.

  Note: *Condensate connection for GEVG 0.5-5T is on the right-hand side of the unit.*
- For acoustically sensitive areas, a 0.5-inch thick field provided vibration pad (5) should be installed below the vertical unit. This field provided piece should be equal to the overall foot-print size of the unit to provide sound damping of the unit while in operation.
- Hose kits (6) are used to connect the water supply and return lines to the water inlet and outlets. Trane includes various hose kit combinations to better facilitate system flow balancing. These flexible hoses, reduce vibration between the unit and the rigid piping system.

Installation Made Easy (GEH 0.5 to 5 Tons)

Installing a horizontal unit inside a corridor to enhance sound attenuation provides value to duct design. Trane takes this fact one step further.

The horizontal design offers same side return-air/supply-air access to the unit. This access is contained within the overall dimension of the units length. The unit can be installed closely against a corridor wall without requiring extra space for the duct.

Most horizontal unit designs provide an opposite supply air from the return air arrangement, or an end supply arrangement option. See the end-supply example. An end-supply design increases the overall unit length of the system to accommodate a 90° duct turn. This not only requires added space, but also adds cost in both materials and installation.

Additional value to the design is acquired through the same side supply/return-air design. This design eliminates a requirement for a four-sided service access. When installing the same side return/supply-air access, a small clearance of 3-inch minimum is all that is required between the unit and the wall.

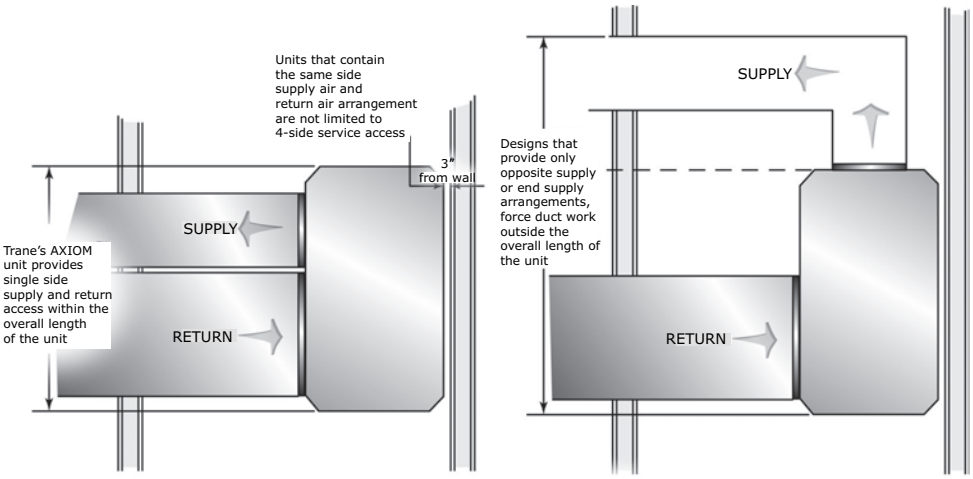

Duct Design for Noise Control

Proper acoustics are often a design requirement. Most of the problems that are associated with HVAC generated sound can be avoided by properly selecting and locating the components of the system. Acoustical modeling should be used to find the lowest cost design to meet a specific sound requirement, however, there are some general do's and don'ts that should be observed.

Improper Supply Air-Ducting (0.5 to 5 Tons)

The figure below shows a supply air duct that is placed too close to the blower to provide substantial noise attenuation. It also, represents the effects on sound that a short supply branch connected to the discharge may produce. Avoid these forms of connections when designing ductwork where noise attenuation is critical.

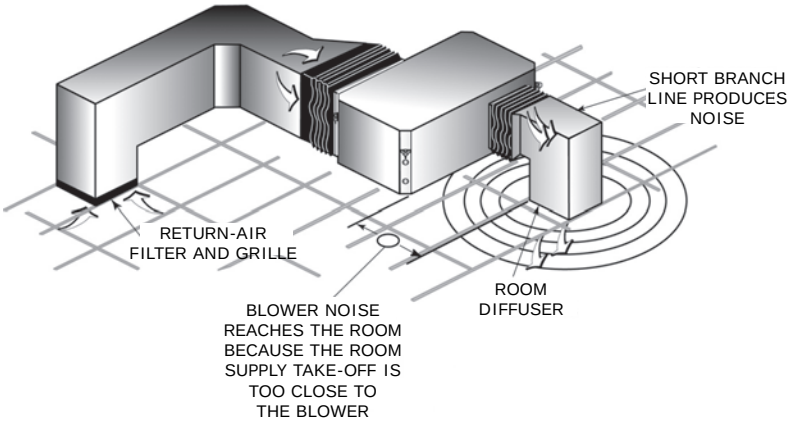

The following suggestions will reduce the amount of sound that reaches the occupied space:

- Design the duct run with two 90° turns
- Line the first 5 feet of the supply trunk
- Line elbows and transition pieces, as well as a short distance upstream and downstream of the fittings
- Use flexible connections to isolate vibrations
- Provide multiple discharges
- Keep duct velocity low

Figure 10. Desired supply air ducting

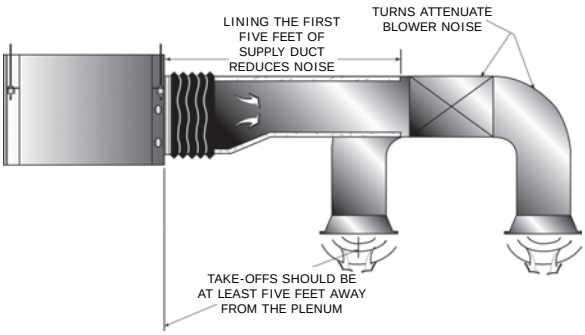

See Figure 10, p. 28 for a positive representation of supply duct work design for noise attenuation on units over 1.5 tons.

Figure 11. Improper return-air ducting

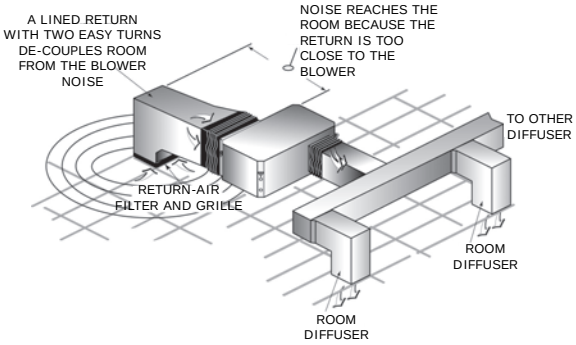

Sound control applies to the return side of the duct design as well as the supply side. Figure 11, p. 28 demonstrates a poor installation. Note that the return air opening is close to the cabinet of the unit.

Figure 12. Proper return-air ducting

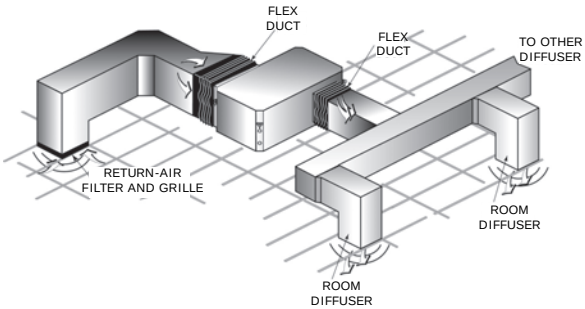

Figure 12, p. 28 graphic represents proper installation of return-air duct. This includes:

- Two 90° bends prior to the intake
- Lining the first 10 feet of the return air duct
- Locating the return-air intake away from the unit blower

A duct system design that takes noise control into account:

- Keeps air flow velocities low
- Uses aerodynamic fittings
- Uses a duct liner if metal duct is applied
- Avoids line-of-sight connections between a noise source and an outlet
- Avoids line-of-sight connection between a noise source and an inlet
- Properly locates balancing dampers
- Seals cracks, seams, and joints in the duct run and equipment panels
- Blocks transmission through walls, ceiling and floors
- Mounts and supports the ductwork with isolation devices that absorb vibration
- Uses flexible duct connections
- Uses flexible braided hoses on the water connections

Water Flow Control

Trane's Axiom product line features thermal expansion valves on every unit. The operating range for the TXV is between 45ºF and 110ºF for cooling and between 25ºF and 86ºF for heating. On systems that expect low water temperatures, a waterside economizer can be employed to eliminate the need to operate the compressors and take full advantage of "free cooling." Water regulating valves are not recommended.

A two-position isolation valve is recommended for use with the Axiom WSHP unit on systems utilizing variable water flow. The two-position isolation valve allows full water flow through the unit when the compressor is in operation. When the compressor is off, the valve closes and shuts off water flow to the unit allowing the system pumps to unload and operate more efficiently. Isolation valves are typically provided as part of the hose kit and connect to the unit terminal strip. A variety of manual and automatic flow control kits including hoses are available as accessories for balancing a water source heat pump system. For a complete product listing, refer to the Hose Kit Accessories product catalog, WSHP-PRC025*-EN.

Model Number Description

Digits 1–3 — Unit Configuration

GEH = Standard Efficiency Horizontal 0.5 to 15 Tons
GEV = Standard Efficiency Vertical 6 to 25 Tons

Digit 4 — Development Sequence

E = R-410A

Digits 5–7 — Nominal Capacity

006 = 0.5 Tons
009 = 0.75 Tons
012 = 1 Tons
015 = 1.25 Tons
018 = 1.5 Tons
024 = 2 Tons
030 = 2.5 Tons
035 = 3 Tons
042 = 3.5 Tons
048 = 4 Tons
060 = 5 Tons
072 = 6 Tons
090 = 7.5 Tons
120 = 10 Tons
150 = 12.5 Tons
180 = 15 Tons
240 = 20 Tons
300 = 25 Tons

Digit 8 — Voltage (Volts/Hz/Phase)

0 = 115/60/1[1]
1 = 208/60/1
2 = 230/60/1
3 = 208/60/3
4 = 460/60/3
5 = 575/60/3
6 = 220–240/50/1
7 = 265/60/1
8 = 230/60/3
9 = 380–415/50/3

Digit 9 — Heat Exchanger

1 = Copper-Water Coil
2 = Cupro-Nickel Water Coil
7 = Insulated Copper-Water Coil
8 = Insulated Cupro-Nickel Water Coil

Digit 10 — Current Design Sequence

Digit 11 — Refrigeration Circuit

0 = Heating and Cooling Circuit
2 = Heating and Cooling Circuit with Hot Gas Reheat
3 = Heating and Cooling Circuit with Waterside Economizer
4 = Heating and Cooling Circuit with HGR and WSE[2]

Digit 12 — Blower Configuration

1 = Standard Blower Motor[3]
2 = High Static Blower Motor[3]
A = Drive Package A
B = Drive Package B
C = Drive Package C
D = Drive Package D
E = Drive Package E
F = Drive Package F
G = Drive Package G
H = Drive Package H
J = Drive Package J
1* = 2 Speed Drive Package A
2* = 2 Speed Drive Package B
3 = 2 Speed Drive Package C
4 = 2 Speed Drive Package D
5 = 2 Speed Drive Package E
6 = 2 Speed Drive Package F
7 = 2 Speed Drive Package G
8 = 2 Speed Drive Package H
9 = 2 Speed Drive Package J

Digit 13 — Freeze Protection[4]

A = 20°F Freezestat (For Glycol loop)
B = 35°F Freezestat (For Water loop)

Digit 14 — Open Digit = 0

Digit 15 — Supply-Air Arrangement

B = Back Supply-Air Arrangement
F = Front Supply-Air Arrangement
L = Left Supply-Air Arrangement
R = Right Supply-Air Arrangement
T = Top Supply-Air Arrangement[5]

Digit 16 — Return-Air Arrangement

B = Back Return-Air Arrangement[2]
F = Front Return-Air Arrangement[2]
L = Left Return-Air Arrangement
R = Right Return-Air Arrangement

Digit 17 — Control Types

D = Deluxe 24V Controls
B = Tracer® ZN524 Controls
F = UC400
G = UC400 w/Wireless Comm

Digit 18 — Tstat/Sensor Location

0 = Wall Mounted Location

Digit 19 — Fault Sensors

1 = Condensate Overflow Sensor
3 = Condensate Overflow and Filter Maintenance Timer
6 = Condensate Overflow and Fan Status
J = Fan Status, Filter Maintenance Timer and Condensate Overflow Sensor

Digit 20 — Temperature Sensor

0 = No Temperature Sensor
1 = Entering Water Sensor

Digit 21 — Insulation

1 = Standard Fiberglass Insulation
2 = Foil-faced Insulation in Airstream [3]

Digit 22 — Electric Heat

0 = No Electric Heat
1 = Internal Boilerless Electric Heat[3]
4 = External Boilerless Electric Heat
5 = External Supplemental Electric Heat[2]

Digit 23 — ON/OFF Switch

0 = No **"ON"**/**"OFF"** Switch
1 = **"ON"**/**"OFF"** Switch

Digit 24 — Filter Type

1 = 1" Throwaway Filter
2 = 2" Throwaway Filter
4 = 2" MERV 8
5 = 2" MERV 13

Digit 25 — Acoustic Arrangement

0 = Enhanced Sound Attenuation
1 = Deluxe Sound Attenuation[7]

Digits 26–34 — Does Not Apply to GEH or GEV
00000000000 = Digits 26-36 are not applicable to the GEH or GEV products

Digits 35 — Unit Drain Pan Option

A = Polymer Drain Pan
B = Stainless Steel Drain Pan

Model Number Notes
Notes:

1. 0.5 to 1 Ton only
2. 6 to 25 Tons only
3. 0.5 to 5 Tons only
4. 20°F Freezestat is typically used in a geothermal application. 35°F Freezestat is typically used in a boiler/tower application.
5. Only available on vertical units
6. ON/OFF switch not available with boilerless electric heat option or units over 60 amps
7. 0.5 to 5 Tons (horizontal only)

GEV Models

Digits 1–3 — Unit Configuration

GEV = Standard Efficiency Vertical

Digit 4 — Development Sequence

G

Digits 5–7 — Nominal Size (MBH)

006 = 6.0 MBH
009 = 9.0 MBH
012 = 12.0 MBH
015 = 15.0 MBH
018 = 18.0 MBH
024 = 24.0 MBH
030 = 30.0 MBH
036 = 36.0 MBH
042 = 42.0 MBH
048 = 48.0 MBH
060 = 60.0 MBH

Digit 8 — Voltage (Volts/Hz/Phase)

4 = 460/60/3
7 = 265/60/1
A = 208-230/60/1
B = 208-230/60/3

Digit 9 — Heat Exchanger

1 = Copper-Water Coil
2 = Cupro-Nickel Water Coil
7 = Insulated Copper-Water Coil/Suction Line
8 = Insulated Cupro-Nickel Water Coil/Suction Line

Digit 10 — Design Sequence

A First Design Sequence

Digit 11 — Refrigeration Circuit

0 = Heating and Cooling Circuit
2 = Heating and Cooling Circuit with Hot Gas Reheat
3 = Heating and Cooling Circuit with Waterside Economizer
4 = Heating and Cooling Circuit with Waterside Economizer, Hot Gas Reheat

Digit 12 — Blower Configuration

K = Variable ECM Motor, Constant Torque

Digit 13 — Freeze Protection[2]

A = 20°F Freezestat (For Glycol loop)
B = 35°F Freezestat (For Water loop)

Digit 14 — Open Digit = 0

Digit 15 — Supply-Air Arrangement

T = Top Supply-Air Arrangement
B = Back Supply-Air Arrangement

Digit 16 — Return-Air Arrangement

L = Left Return-Air Arrangement
R = Right Return-Air Arrangement

Digit 17 — Control Types

B = Tracer® ZN524 Controls
D = Deluxe 24V Controls
H = UC400/B
J = UC400B w/Air-Fi® Wireless Communications

Digit 18 — Tstat/Sensor Location

0 = Wall Mounted Location

Digit 19 — Fault Sensors

1 = Condensate Overflow Sensor
3 = Condensate Overflow and Filter Maintenance Timer
6 = Condensate Overflow and Fan Status
J = Fan Status, Filter Maintenance Timer and Condensate Overflow Sensor

Digit 20 — Temperature Sensor

0 = No Additional Temperature Sensor
1 = Entering Water Sensor

Digit 21 — Insulation

1 = Matte Faced Insulation
2 = Foil Faced Insulation

Digit 22 — Electric Heat Option

0 = No Electric Heat
6 = Factory Mounted External Boilerless Low Electric Heat
7 = Factory Mounted External Supplemental Low Electric Heat
8 = Field Mounted External Boilerless Electric Heat
9 = Field Mounted Supplemental Electric Heat
A = Factory Mounted External Boilerless Medium Electric Heat
B = Factory Mounted External Supplemental Medium Electric Heat
C = Factory Mounted External Boilerless High Electric Heat
D = Factory Mounted External Supplemental High Electric Heat

Digit 23 — Unit Mounted Disconnect

0 = No Unit Mounted Disconnect
2 = Unit Mounted Disconnect

Digit 24 — Filter Type

1 = 1-inch Throwaway Filter
2 = 2-inch Throwaway Filter
4 = 2-inch MERV 8
5 = 2-inch MERV 13

Digit 25 — Acoustic Arrangement

1 = Standard Sound Attenuation
2 = Deluxe Sound Attenuation

Digits 26–36 — Does Not Apply

00000000000 = Digits 26-36 are not applicable to the GEH or GEV products

Digit 37 — Ducted Filter Rack

0 = Non-ducted filter rack
A = Ducted Filter Rack (Side Access/LH—RH)

Digit 38 — Isolation Valve

0 = No Isolation Valve
1 = Factory Mounted Isolation Valve

Digit 39 — Power Connection

1 = Single Point
2 = Dual Point (Electric Heat Power Separate from Unit)

Digit 40 — Drain Pan

A = Polymer Drain Pan
B = Stainless Steel Drain Pan

Model Number Note:
Notes:

1. Back Supply, Electric Heat and Deluxe Sound option are avalible in later product release.
2. 20°F Freezestat is typically used in a geothermal application. 35°F Freezestat is typically used in a boiler/tower application.

General Data

Table 7. Models GEHE006-024 (0.5 to 2 tons)

Model GEH	006	009	012	015	018	024
Unit Size Depth x L x H (in.)	40 x 20 x 15	40 x 20 x 15	40 x 20 x 15	40 x 20 x 15	46 x 23 x 18	46 x 23 x 18
Compressor Type	Rotary	Rotary	Rotary	Rotary	Rotary	Scroll
Net Weight (lbs.)	165	165	173	173	248	253
Ship Weight (lbs.)	195	195	203	203	268	285
Filter Size Nominal (in.)	15 x 20	15 x 20	15 x 20	15 x 20	18 x 24	18 x 24
Water in/out size (FPT)	0.50	0.50	0.50	0.50	3/4	3/4
Condensate size (NPTI)	3/4	3/4	3/4	3/4	3/4	3/4
Blower Wheel Size (in.) - Direct Drive	9 x 4	9 x 4	9 x 4	9 x 4	9 x 4	10 x 6

Table 8. Models GEHE030-060 (2.5 to 5 tons)

Model GEH	030	035	042	048	060
Unit Size Depth x L x H (in.)	46 x 23 x 18	50 x 25 x 19	50 x 25 x 19	58 x 33 x 21	58 x 33 x 21
Compressor Type	Scroll	Scroll	Scroll	Scroll	Scroll
Net Weight (lbs.)	253	313	288	398	398
Ship Weight (lbs.)	285	343	318	428	428
Filter Size Nominal (in.)	18 x 24	19 x 26	19 x 26	21 x 30	21 x 30
Water in/out size (FPT)	3/4	3/4	3/4	1.00	1.00
Condensate size (NPTI)	3/4	3/4	3/4	3/4	3/4
Blower Wheel Size (in.) - Direct Drive	10 x 6	11 x 8	11 x 8	10 x 10 Std. Static 12 x 11 High Static	12 x 11

Table 9. Models GEHE072-180 (6 to 15 tons)

Model GEH	072	090	120	150	180
Unit Size Depth x L x H (in.	41 x 79 X 21	41 x 79 x 21	41 x 79 x 21	47 x 85 x 28	47 x 85 x 28
Compressor Type	Scroll (2)	Scroll (2)	Scroll (2)	Scroll (2)	Scroll (2)
Net Weight (lbs.)	665	676	785	857	955
Ship Weight (lbs.)	714	724	827	899	997
Filter Size Nominal (in.)	20 x 25 (3)	20 x 25 (3)	20 x 25 (3)	20 x 25 (3)	20 x 25 (3)
Water in/out size (FPT)	1.25	1.25	1.50	1.50	1.50
Condensate size (NPTI)	0.50	0.50	0.50	0.50	0.50
Blower Wheel Size (in.) - Direct Drive	13 x 13	13 x 13	13 x 13	15 x 15	15 x 15

Table 10. Models GEVG006–024 (0.5 to 2 tons)

Model GEVG	006	009	012	015	018	024
Unit Size width x depth x height (in.)	19 x 19 x 30	19 x 19 x 30	19 x 19 x 30	21.5 x 21.5 x 34	21.5 x 21.5 x 34	21.5 x 23 x 36
Compressor type	Rotary	Rotary	Rotary	Rotary	Rotary	Scroll
Net weight (lbs.)	149	149	149	155	157	210
Ship weight (lbs.)	201	201	201	210	212	268
Filter size nominal (in.)	14 X 16	14 X 16	14 X 16	16 X 19	16 X 19	17 X 20
Water in/out size (FPT)	0.5	0.5	0.5	0.5	0.5	0.75
Condensate size (NPTI)	0.75	0.75	0.75	0.75	0.75	0.75
Blower wheel Size (in.)	9 x 6	9 x 6	9 x 6	9 x 8	9 x 8	10 x 8

Table 11. Models GEVG030-060 (2.5 to 5 tons)

Model GEVG	030	036	042	048	060
Unit Size width x depth x height (in.)	21.5 x 23 x 36	21.5 x 26 x 38	21.5 x 26 x 38	24 x 32.5 x 42	24 x 32.5 x 42
Compressor type	Scroll	Scroll	Scroll	Scroll	Scroll
Net weight (lbs.)	214	220	252	280	285
Ship weight (lbs.)	272	280	312	343	348
Filter size nominal (in.)	17 X 20	18 X 23	18 X 23	20 X 30	20 X 30
Water in/out size (FPT)	0.75	0.75	0.75	1	1
Condensate size (NPTI)	0.75	0.75	0.75	0.75	0.75
Blower wheel Size (in.)	10 x 8	10 x 9	10 x 9	11 x 11	11 x 11

Table 12. Models GEVE072-180 (6 to 15 tons)

Model GEV	072	090	120	150	180
Unit Size Depth x L x H (in)	42 x 36 x 63	42 x 36 x 63	42 x 36 x 63	81-5/8 x 36-1/4 x 68	81-5/8 x 36-1/4 x 68
Compressor Type	Scroll (2)	Scroll (2)	Scroll (2)	Scroll (2)	Scroll (2)
Net Weight (lbs.)	590	618	817	1162	1178
Ship Weight (lbs.)	630	658	857	1207	1223
Filter Size Nominal (in.)	20 x 20 (4)	20 x 20 (4)	20 x 20 (4)	20 x 25 (6)	20 x 25 (6)
Water in/out size (FPT)	1-1/4	1-1/4	1.50	1.50	1.50
Condensate size (NPTI)	3/4	3/4	3/4	3/4	3/4
Blower Wheel Size (in.)	13 x 13	13 x 13	13 x 13	15 x 15	15 x 15

Table 13. Models GEVE240-300 (20 to 25 tons)

Model GEV	240	300
Unit Size Depth x L x H (in)	81-5/8 x 36-1/4 x 68	81-5/8 x 36-1/4 x 68
Compressor Type	Scroll (2)	Scroll (2)
Net Weight (lbs.)	1599	1620
Ship Weight (lbs.)	1644	1665
Filter Size Nominal (in.)	20 x 25 (6)	20 x 25 (6)
Water in/out size (FPT)	2.00	2.00
Condensate size (NPTI)	3/4	3/4
Blower Wheel Size (in.)	(2) 13 x 13	(2) 15 x 11 or (2) 13 x 13[(a)]

[(a)] Size is determined by specific drive package ordered.

Table 14. Models GEVG006–060 (0.5 to 5 tons) air-to-refrigerant coil

Model GEVG	006-012	015-018	024-030	036-042	048-060
Working Pressure (psig)	650	650	650	650	650
Tubes High	14	16	17	20	20
Tubes Deep	3	3	3	3	3
No. of Circuits	1	2	3	4	5
Finned vol. (h,w,d)	14 x 14.75 x 2.6	16 x 17.25 x 2.6	17 x 18.75 x 2.6	18 x 21.75 x 2.6	20 x 28.25 x 2.6
Coil Surface Area (Sq. Ft.)	1.43	1.92	2.21	3.02	3.92
Fins per Inch	14	14	14	14	14
Tube Material	Copper	Copper	Copper	Copper	Copper
Tube OD (in.)	0.375	0.375	0.375	0.375	0.375

Table 14. Models GEVG006–060 (0.5 to 5 tons) air-to-refrigerant coil (continued)

Model GEVG	006-012	015-018	024-030	036-042	048-060
Wall Thickness	0.014	0.014	0.014	0.014	0.014
Return Bends	Copper	Copper	Copper	Copper	Copper

Table 15. Models GEHE006-060 (0.5 to 5 tons) air-to-refrigerant coil

Model GEH	006-015	018-030	035-042	048-060
Working Pressure (psig)	650	650	650	650
Tubes High	14	17	18	20
Tubes Deep	3	3	4	4
No. of Circuits	1	2	4	5
Finned vol. (h,w,d)	14 x 16 x 2.6	16 x 19 x 2.6	18 x 21 x 2.6	20 x 29 x 3.5
Coil Surface Area (Sq. Ft.)	1.56	2.11	2.63	4.03
Fins per Inch	12	12	12	12
Tube Material	Copper	Copper	Copper	Copper
Tube OD (in.)	0.375	0.375	0.375	0.375
Wall Thickness	0.014	0.014	0.014	0.014
Return Bends	Copper	Copper	Copper	Copper

Table 16. Models GEHE/GEVE 072-300 (6 to 25 tons) dual compressor circuit, air-to-refrigerant coil

Unit Size	072	090	120	150	180	240	300
Working Pressure	650	650	650	650	650	650	650
Tubes High	(GEH) 18.00 (GEV) 24.00	(GEH) 18.000 (GEV) 28.000	(GEH) 18.00 (GEV) 36.00	(GEH) 24.00 (GEV) 28.00	(GEH) 24.00 (GEV) 32.00	(GEV) 36.00	(GEV) 36.00
Tubes Deep	4.00	4.00	4.00	(GEH) 4.00 (GEV) 2.00	(GEH) 4.00 (GEV) 3.00	(GEV) 4.00	(GEV) 4.00
No. of Circuits	(GEH) 6 refrig. flow paths (2X) (GEV) 6 refrig. flow paths (2X)	(GEH) 6 refrig. flow paths (2X) (GEV) 7 refrig. flow paths (2X)	(GEH) 9 refrig. flow paths (2X) (GEV) 9 refrig. flow paths (2X)	(GEH) 8 refrig. flow paths (2X) (GEV) 7 refrig. flow paths (2X)	(GEH) 6 refrig. flow paths (2X) (GEV) 8 refrig. flow paths (2X)	(GEV) 18 refrig. flow paths (2X)	(GEV) 18 refrig. flow paths (2X)
Finned vol. (h,w,d)	(GEH) 18 x 48 x 3.5 (GEV) 24 x 34 x 3.5	(GEH) 18 x 54 x 3.5 (GEV) 28 x 34 x 3.5	(GEH) 18 x 73 x 3.5 (GEV) 36 x 34 x 3.5	(GEH) 24 x 73 x 3.5 (GEV) 28 x 73 x 1.7	(GEH) 24 x 73 x 3.5 (GEV) 32 x 73 x 2.6	(GEV) 36x 73 x 3.5	(GEV) 36x 73 x 3.5
Coil Surface Area (Ft^2)	(GEH) 6.00 (GEV) 5.67	(GEH) 6.75 (GEV) 6.61	(GEH) 9.125 (GEV) 8.500	(GEH) 12.167 (GEV) 14.190	(GEH) 12.167 (GEV) 16.220	(GEV) 18.250	(GEV) 18.250
Fins Per Inch	14.00	14.000	14.000	14.00	14.00	14.00	14.00
Tube Material	Copper	Copper	Copper	Copper	Copper	Copper	Copper
Tube OD (in.)	3/8	3/8	3/8	3/8	3/8	3/8	3/8
Wall Thickness	0.014	0.014	0.014	0.014	0.014	0.014	0.014
Return Bends	Copper	Copper	Copper	Copper	Copper	Copper	Copper

Table 17. Models GEHE006-060 (0.5 to 5 tons) water-to-refrigerant coil

Model GEH	006	009	012	015	018	024	030	035	042	048	060
Refrigerant Working Pressure (psig)	650	650	650	650	650	650	650	650	650	650	650
Water Working Pressure	400	400	400	400	400	400	400	400	400	400	400

Table 18. Models GEVG006-060 (0.5 to 5 tons) water-to-refrigerant coil

Model GEV	006	009	012	015	018	024	030	036	042	048	060
Refrigerant Working Pressure (psig)	650	650	650	650	650	650	650	650	650	650	650
Water Working Pressure	400	400	400	400	400	400	400	400	400	400	400

Table 19. Models GEHE072-180 (6 to 15 tons) water-to-refrigerant coil

Model	072	090	120	150	180
Refrigerant Working Pressure (psig)	650	650	650	650	650
Water Working Pressure	400	400	400	400	400

Table 20. Models GEVE072-300 (6 to 25 tons) water-to-refrigerant coil

Model	072	090	120	150	180	240	300
Refrigerant Working Pressure (psig)	650	650	650	650	650	650	650
Water Working Pressure	400	400	400	400	400	400	400

Performance Data

Table 21. ANSI/AHRI/ASHRAE/ISO13256-1 WLHP, GWHP and GLHP performance - 0.5 to 25 Tons

Model	Rated GPM	Rated CFM	Water Loop Heat Pump				Ground Water Heat Pump				Ground Loop Heat Pump			
			Cooling 86°F		Heating 68°F		Cooling 59°F		Heating 50°F		Full Cool 77°F		Full Heat 32°F	
			Capacity Btuh	EER	Capacity Btuh	COP	Capacity Btuh	EER	Capacity Btuh	COP	Capacity Btuh	EER	Capacity Btuh	COP
GEHE006	1.8	215	7,500	12.00	9,300	4.30	8,000	15.98	7,900	3.72	7,900	14.10	6,000	3.20
GEHE009	2.1	285	8,800	12.38	11,300	4.56	9,400	15.98	9,300	3.91	9,300	14.10	7,200	3.20
GEHE012	2.8	380	11,700	13.20	14,600	4.69	12,700	18.86	12,000	4.02	12,000	14.52	9,300	3.26
GEHE015	3.5	475	14,300	12.85	18,300	4.30	15,800	19.61	15,300	3.72	14,800	14.66	12,100	3.20
GEHE018	4.2	570	18,000	13.00	21,900	4.47	19,500	18.56	18,100	3.91	18,500	14.18	14,300	3.20
GEHE024	5.6	760	24,000	13.60	29,700	4.55	24,800	17.61	24,900	3.70	25,100	15.87	19,300	3.29
GEHE030	7.0	900	28,200	13.04	35,700	4.46	32,000	19.27	29,800	3.97	29,500	14.83	22,800	3.29
GEHE035	8.4	1140	33,800	13.70	41,200	4.70	38,200	20.20	33,800	4.00	35,300	15.80	25,900	3.20
GEHE042	9.8	1330	41,500	13.00	51,900	4.46	45,900	18.42	42,900	3.88	43,100	14.55	34,100	3.29
GEHE048	11.2	1520	49,700	13.13	58,200	4.65	55,700	19.46	49,300	4.07	51,800	15.02	38,700	3.49
GEHE060	14.0	1900	59,700	13.00	70,500	4.36	66,200	18.23	58,000	3.88	61,500	13.40	46,400	3.29
GEHE072	18.0	2100	75,500	13.40	83,800	4.80	83,200	21.90	69,100	4.20	74,600	16.00	54,400	3.50
GEHE090	22.5	2625	84,800	14.10	99,200	4.68	94,600	20.67	83,000	4.07	88,100	15.80	64,500	3.40
GEHE120	30.0	3500	116,800	13.35	147,100	4.60	129,000	19.30	122,600	4.10	120,600	14.90	99,200	3.20
GEHE150	37.5	4375	152,800	14.30	175,000	4.40	166,800	20.60	147,800	4.10	158,000	16.40	118,000	3.40
GEHE180	45.0	5250	180,800	13.10	222,700	4.40	204,700	18.50	183,100	4.00	188,500	14.70	147,900	3.50
GEVG006	1.50	190	7,000	13.70	9,300	4.70	8,100	21.30	7,500	4.10	7,400	16.00	5,600	3.30
GEVG009	2.25	285	8,700	15.50	11,200	5.50	9,600	23.80	9,100	4.70	8,900	17.80	6,700	3.70
GEVG012	3.00	380	11,400	14.90	15,300	5.30	13,300	24.20	12,400	4.60	12,100	17.60	9,400	3.70
GEVG015	3.75	475	15,400	15.40	19,300	5.20	17,300	23.60	15,700	4.40	16,100	17.90	12,400	3.70
GEVG018	4.50	570	18,000	15.70	22,800	5.10	20,100	24.20	18,700	4.50	18,800	18.20	14,400	3.70
GEVG024	6.00	760	23,900	16.10	31,100	5.30	26,600	24.40	25,300	4.60	24,800	18.50	19,600	3.80
GEVG030	7.50	950	29,000	15.40	37,900	5.10	32,300	23.00	30,800	4.50	30,200	17.70	23,300	3.70
GEVG036	9.00	1140	36,000	15.40	45,100	5.00	39,900	22.60	36,900	4.40	37,300	17.60	28,700	3.60
GEVG042	10.50	1330	40,900	14.90	55,600	4.70	45,500	22.00	45,600	4.20	42,600	17.10	35,300	3.50
GEVG048	12.00	1520	49,500	15.10	62,600	4.90	55,700	22.80	50,000	4.20	51,800	17.40	37,600	3.30
GEVG060	15.00	1900	55,200	14.50	75,400	4.60	61,700	21.30	61,200	4.10	57,300	16.50	47,000	3.50
GEVE072	18.0	2100	75,600	15.24	82,800	4.64	84,800	22.85	70,200	4.18	78,800	17.50	54,500	3.44
GEVE090	22.5	2625	88,800	15.10	103,600	4.50	98,600	22.91	83,600	4.10	92,100	17.40	65,600	3.40
GEVE120	30.0	3500	118,300	14.54	134,300	4.50	131,400	21.05	113,900	4.06	123,200	16.60	90,400	3.40
GEVE150	37.5	4375	154,300	15.40	185,300	4.80	170,400	22.20	152,900	4.30	158,900	17.30	120,600	3.60
GEVE180	45.0	5250	185,700	14.10	221,500	4.40	205,000	20.10	180,400	4.10	192,200	16.10	143,500	3.50
GEVE240	60.0	7000	249,800	15.10	270,800	4.60	280,200	22.10	223,800	4.20	258,000	17.00	177,900	3.50
GEVE300	75.0	8750	305,700	13.90	350,400	4.3	339,400	19.50	286,400	3.80	315,500	15.70	234,600	3.30

Notes:

1. Rated in accordance with ANSI/AHRI/ASHRAE/ISO13256-1. Certified conditions are 80.6F DB/66.2F WB EAT in cooling and 68F DB/59F WB EAT in heating.
2. Models with capacities greater than 135,000 Btuh are not included in the ANSI/AHRI/ASHRAE/ISO13256-1 water-to-air and brine-to-air heat pump certification program.

Cooling and Heating Capacities 0.5 tons

Table 22. Cooling capacities 0.5 tons (net) - GEHE006

EWT	GPM	Total Mbtuh	Sen Mbtuh	SHR	Comp Pwr kW	Reject Mbtuh	LWT	Feet Head
45	1.0	8.9	6.0	0.67	0.32	10.0	65.0	1.1
45	1.2	8.9	6.0	0.67	0.30	9.9	61.5	1.5
45	1.4	9.0	6.1	0.68	0.29	10.0	59.3	2.1
45	1.5	9.0	6.1	0.68	0.29	10.0	58.3	2.3
45	1.6	9.0	6.1	0.68	0.29	10.0	57.5	2.6
45	1.7	9.0	6.1	0.68	0.28	10.0	56.8	2.9
45	1.8	9.0	6.1	0.68	0.28	9.9	56.0	3.2
55	1.0	8.6	5.8	0.67	0.38	9.9	74.8	1.0
55	1.2	8.7	5.9	0.68	0.36	9.9	71.5	1.4
55	1.4	8.7	5.9	0.68	0.35	9.9	69.1	1.9
55	1.5	8.7	5.9	0.68	0.34	9.9	68.2	2.1
55	1.6	8.8	6.0	0.68	0.34	10.0	67.5	2.4
55	1.7	8.8	6.0	0.68	0.34	9.9	66.6	2.6
55	1.8	8.8	6.0	0.68	0.33	9.9	66.0	2.9
68	1.0	8.1	5.6	0.69	0.44	9.6	87.2	0.9
68	1.2	8.2	5.7	0.70	0.43	9.7	84.2	1.3
68	1.4	8.2	5.7	0.70	0.42	9.6	81.7	1.7
68	1.5	8.3	5.8	0.70	0.41	9.7	80.9	1.9
68	1.6	8.3	5.8	0.70	0.41	9.7	80.1	2.2
68	1.7	8.3	5.8	0.70	0.40	9.7	79.4	2.4
68	1.8	8.3	5.8	0.70	0.40	9.7	78.8	2.7
75	1.0	7.8	5.5	0.71	0.47	9.4	93.8	0.9
75	1.2	7.9	5.6	0.71	0.46	9.5	90.8	1.2
75	1.4	8.0	5.7	0.71	0.45	9.5	88.6	1.6
75	1.5	8.0	5.7	0.71	0.44	9.5	87.7	1.9
75	1.6	8.0	5.7	0.71	0.44	9.5	86.9	2.1
75	1.7	8.0	5.7	0.71	0.43	9.5	86.2	2.3
75	1.8	8.0	5.7	0.71	0.43	9.5	85.6	2.6
86	1.0	7.4	5.5	0.74	0.53	9.2	104.4	0.8
86	1.2	7.4	5.5	0.74	0.51	9.1	101.2	1.2
86	1.4	7.5	5.5	0.73	0.50	9.2	99.1	1.6
86	1.5	7.5	5.5	0.73	0.50	9.2	98.3	1.8
86	1.6	7.5	5.5	0.73	0.49	9.2	97.5	2.0
86	1.7	7.5	5.5	0.73	0.49	9.2	96.8	2.2
86	1.8	7.5	5.5	0.73	0.49	9.2	96.2	2.4
95	1.0	7.0	5.3	0.76	0.59	9.0	113.0	0.8
95	1.2	7.1	5.4	0.76	0.57	9.0	110.0	1.1
95	1.4	7.1	5.4	0.76	0.56	9.0	107.9	1.5
95	1.5	7.1	5.4	0.76	0.55	9.0	107.0	1.7
95	1.6	7.1	5.4	0.76	0.55	9.0	106.3	1.9

Table 22. Cooling capacities 0.5 tons (net) - GEHE006 (continued)

EWT	GPM	Total Mbtuh	Sen Mbtuh	SHR	Comp Pwr kW	Reject Mbtuh	LWT	Feet Head
95	1.7	7.1	5.4	0.76	0.55	9.0	105.6	2.1
95	1.8	7.2	5.5	0.76	0.54	9.1	105.1	2.3
105	1.0	6.5	5.0	0.77	0.66	8.8	122.6	0.8
105	1.2	6.6	5.1	0.77	0.64	8.8	119.7	1.1
105	1.4	6.6	5.1	0.77	0.63	8.8	117.6	1.5
105	1.5	6.7	5.2	0.78	0.63	8.8	116.7	1.7
105	1.6	6.7	5.2	0.78	0.62	8.8	116.0	1.9
105	1.7	6.7	5.2	0.78	0.62	8.8	115.4	2.1
105	1.8	6.7	5.2	0.78	0.62	8.8	114.8	2.3
115	1.0	6.0	4.8	0.80	0.74	8.5	132.0	0.8
115	1.2	6.1	4.9	0.80	0.72	8.6	129.3	1.1
115	1.4	6.1	4.9	0.80	0.71	8.5	127.1	1.4
115	1.5	6.2	5.0	0.81	0.71	8.6	126.5	1.6
115	1.6	6.2	5.0	0.81	0.70	8.6	125.8	1.8
115	1.7	6.2	5.0	0.81	0.70	8.6	125.1	2.0
115	1.8	6.2	5.0	0.81	0.70	8.6	124.6	2.2

Note: Cooling performance data is tabulated at 80.6°F DB/66.2°F WB entering air at ANSI/AHRI/ASHRAE/ISO13256-1 rated cfm. For conditions other than rated and the cooling correction factors for variations in entering air temperature. Rated GPM 1.5; Minimum CFM 152; Rated CFM 190; than rated and the cooling correction factors for variations in entering air temperature. Rated GPM 1.5; Minimum CFM 152; Rated CFM 190; Maximum CFM 228.

Table 23. Heating capacities 0.5 tons (net) - GEHE006

EWT	GPM	Htg Cap Mbtuh	Absorb Mbtuh	Comp Pwr kW	LWT	Feet Head
25	1	4.2	2.7	0.45	19.6	1.4
25	1.2	4.2	2.6	0.46	20.7	2
25	1.4	4.3	2.7	0.46	21.1	2.6
25	1.5	4.3	2.7	0.46	21.4	3
25	1.6	4.4	2.8	0.46	21.5	3.4
25	1.7	4.4	2.8	0.46	21.7	3.7
25	1.8	4.4	2.8	0.46	21.9	4.1
32	1	4.7	3.1	0.47	25.8	1.3
32	1.2	4.8	3.2	0.48	26.7	1.8
32	1.4	4.9	3.3	0.48	27.3	2.4
32	1.5	4.9	3.3	0.48	27.6	2.7
32	1.6	4.9	3.3	0.48	27.9	3
32	1.7	4.9	3.3	0.48	28.1	3.4
32	1.8	4.9	3.3	0.48	28.3	3.7
45	1	6.1	4.4	0.51	36.2	1.1
45	1.2	6.3	4.6	0.51	37.3	1.5
45	1.4	6.4	4.7	0.51	38.3	2.1
45	1.5	6.4	4.7	0.51	38.7	2.3
45	1.6	6.5	4.8	0.51	39	2.6
45	1.7	6.5	4.8	0.51	39.4	2.9
45	1.8	6.5	4.7	0.51	39.8	3.2

Table 23. Heating capacities 0.5 tons (net) - GEHE006 (continued)

EWT	GPM	Htg Cap Mbtuh	Absorb Mbtuh	Comp Pwr kW	LWT	Feet Head
55	1	7.3	5.5	0.53	44	1
55	1.2	7.4	5.6	0.53	45.7	1.4
55	1.4	7.6	5.8	0.53	46.7	1.9
55	1.5	7.6	5.8	0.54	47.3	2.1
55	1.6	7.7	5.9	0.54	47.6	2.4
55	1.7	7.7	5.9	0.54	48.1	2.6
55	1.8	7.7	5.9	0.54	48.4	2.9
68	1	8.6	6.7	0.56	54.6	0.9
68	1.2	8.8	6.9	0.56	56.5	1.3
68	1.4	8.9	7	0.56	58	1.7
68	1.5	9	7.1	0.56	58.5	1.9
68	1.6	9.1	7.2	0.57	59	2.2
68	1.7	9.1	7.2	0.57	59.5	2.4
68	1.8	9.1	7.2	0.57	60	2.7
75	1	9.2	7.3	0.57	60.4	0.9
75	1.2	9.4	7.4	0.57	62.7	1.2
75	1.4	9.6	7.6	0.58	64.1	1.6
75	1.5	9.6	7.6	0.58	64.9	1.9
75	1.6	9.7	7.7	0.58	65.4	2.1
75	1.7	9.8	7.8	0.58	65.8	2.3
75	1.8	9.8	7.8	0.58	66.3	2.6
86	1	10	8	0.59	70	0.8
86	1.2	10.3	8.3	0.59	72.2	1.2
86	1.4	10.5	8.5	0.6	73.9	1.6
86	1.5	10.5	8.5	0.6	74.7	1.8
86	1.6	10.6	8.6	0.6	75.3	2
86	1.7	10.7	8.6	0.6	75.9	2.2
86	1.8	10.7	8.6	0.6	76.4	2.4

Note: Heating performance data is tabulated at 68.0°F DB at the ANSI/AHRI/ASHRAE/ISO13256-1 rated cfm. For conditions other than what is tabulated, multipliers must be used to correct performance. See performance correction tables for fan correction factors for CFM other than rated and the heating correction factors for variation in entering air temperatures. Rated GPM 1.5;Minimum CFM 152; Rated CFM 190; Maximum CFM 228.

Table 24. Fan correction factors 0.5 tons - GEHE006

Entering cfm	Cooling Capacity	Sensible Capacity	Cooling Input Watts	Heating Capacity	Heating Input Watts
152	0.951	0.886	1.009	0.966	1.106
162	0.966	0.917	1.006	0.976	1.074
171	0.978	0.944	1.004	0.985	1.048
181	0.99	0.974	1.002	0.993	1.022
190	1	1	1	1	1
209	1.019	1.055	0.996	1.013	0.96
219	1.027	1.083	0.995	1.019	0.941
228	1.034	1.108	0.993	1.023	0.926

Table 25. Correction factors for variation in entering air temperature 0.5 tons, GEHE006

Cooling Entering Air WB ºF	Cooling Capacity	Cooling Input Watts	Sensible vs. Entering Dry Bulb Multipliers					Heating Entering Air DB ºF	Heating Capacity	Heating Input Watts
			65.6	70.6	75.6	80.6	85.6			
49.4	0.899	1.045	0.979	1.048	1.121	*	*	53.0	1.031	0.879
56.3	0.898	1.045	0.819	1.013	1.119	*	*	58.0	10.220	0.919
60.3	0.898	10.450	0.627	0.849	1.064	*	*	63.0	1.014	0.960
63.2	0.960	1.015	0.480	0.706	0.928	1.139	*	68.0	1.000	1.000
66.2	1.000	1.000	–	0.533	0.778	1.000	1.209	73.0	0.996	1.049
72.1	1.061	0.975	–	–	0.541	0.695	0.920	78.0	0.987	1.095
77.1	1.139	0.975	–	–	–	0.446	0.658	83.0	0.978	1.143

Note: * = Sensible equals total capacity

Table 26. Cooling capacities 0.5 tons (gross) - GEVG006

EWT	GPM	Total Mbtuh	Sen Mbtuh	SHR	Comp Pwr kW	Reject Mbtuh	LWT	Feet Head
45	1.0	8.9	6.0	0.67	0.32	10.0	65.0	1.1
45	1.2	8.9	6.0	0.67	0.30	9.9	61.5	1.5
45	1.4	9.0	6.1	0.68	0.29	10.0	59.3	2.1
45	1.5	9.0	6.1	0.68	0.29	10.0	58.3	2.3
45	1.6	9.0	6.1	0.68	0.29	10.0	57.5	2.6
45	1.7	9.0	6.1	0.68	0.28	10.0	56.8	2.9
45	1.8	9.0	6.1	0.68	0.28	9.9	56.0	3.2
55	1.0	8.6	5.8	0.67	0.38	9.9	74.8	1.0
55	1.2	8.7	5.9	0.68	0.36	9.9	71.5	1.4
55	1.4	8.7	5.9	0.68	0.35	9.9	69.1	1.9
55	1.5	8.7	5.9	0.68	0.34	9.9	68.2	2.1
55	1.6	8.8	6.0	0.68	0.34	10.0	67.5	2.4
55	1.7	8.8	6.0	0.68	0.34	9.9	66.6	2.6
55	1.8	8.8	6.0	0.68	0.33	9.9	66.0	2.9
68	1.0	8.1	5.6	0.69	0.44	9.6	87.2	0.9
68	1.2	8.2	5.7	0.70	0.43	9.7	84.2	1.3
68	1.4	8.2	5.7	0.70	0.42	9.6	81.7	1.7
68	1.5	8.3	5.8	0.70	0.41	9.7	80.9	1.9
68	1.6	8.3	5.8	0.70	0.41	9.7	80.1	2.2
68	1.7	8.3	5.8	0.70	0.40	9.7	79.4	2.4
68	1.8	8.3	5.8	0.70	0.40	9.7	78.8	2.7
75	1.0	7.8	5.5	0.71	0.47	9.4	93.8	0.9
75	1.2	7.9	5.6	0.71	0.46	9.5	90.8	1.2
75	1.4	8.0	5.7	0.71	0.45	9.5	88.6	1.6
75	1.5	8.0	5.7	0.71	0.44	9.5	87.7	1.9
75	1.6	8.0	5.7	0.71	0.44	9.5	86.9	2.1
75	1.7	8.0	5.7	0.71	0.43	9.5	86.2	2.3
75	1.8	8.0	5.7	0.71	0.43	9.5	85.6	2.6
86	1.0	7.4	5.5	0.74	0.53	9.2	104.4	0.8

Table 26. Cooling capacities 0.5 tons (gross) - GEVG006 (continued)

EWT	GPM	Total Mbtuh	Sen Mbtuh	SHR	Comp Pwr kW	Reject Mbtuh	LWT	Feet Head
86	1.2	7.4	5.5	0.74	0.51	9.1	101.2	1.2
86	1.4	7.5	5.5	0.73	0.50	9.2	99.1	1.6
86	1.5	7.5	5.5	0.73	0.50	9.2	98.3	1.8
86	1.6	7.5	5.5	0.73	0.49	9.2	97.5	2.0
86	1.7	7.5	5.5	0.73	0.49	9.2	96.8	2.2
86	1.8	7.5	5.5	0.73	0.49	9.2	96.2	2.4
95	1.0	7.0	5.3	0.76	0.59	9.0	113.0	0.8
95	1.2	7.1	5.4	0.76	0.57	9.0	110.0	1.1
95	1.4	7.1	5.4	0.76	0.56	9.0	107.9	1.5
95	1.5	7.1	5.4	0.76	0.55	9.0	107.0	1.7
95	1.6	7.1	5.4	0.76	0.55	9.0	106.3	1.9
95	1.7	7.1	5.4	0.76	0.55	9.0	105.6	2.1
95	1.8	7.2	5.5	0.76	0.54	9.1	105.1	2.3
105	1.0	6.5	5.0	0.77	0.66	8.8	122.6	0.8
105	1.2	6.6	5.1	0.77	0.64	8.8	119.7	1.1
105	1.4	6.6	5.1	0.77	0.63	8.8	117.6	1.5
105	1.5	6.7	5.2	0.78	0.63	8.8	116.7	1.7
105	1.6	6.7	5.2	0.78	0.62	8.8	116.0	1.9
105	1.7	6.7	5.2	0.78	0.62	8.8	115.4	2.1
105	1.8	6.7	5.2	0.78	0.62	8.8	114.8	2.3
115	1.0	6.0	4.8	0.80	0.74	8.5	132.0	0.8
115	1.2	6.1	4.9	0.80	0.72	8.6	129.3	1.1
115	1.4	6.1	4.9	0.80	0.71	8.5	127.1	1.4
115	1.5	6.2	5.0	0.81	0.71	8.6	126.5	1.6
115	1.6	6.2	5.0	0.81	0.70	8.6	125.8	1.8
115	1.7	6.2	5.0	0.81	0.70	8.6	125.1	2.0
115	1.8	6.2	5.0	0.81	0.70	8.6	124.6	2.2

Note: Cooling performance data is tabulated at 80.6°F DB/66.2°F WB entering air at ANSI/AHRI/ASHRAE/ISO13256-1 rated cfm. For conditions other than rated and the cooling correction factors for variations in entering air temperature. Rated GPM 1.5; Minimum CFM 152; Rated CFM 190; than rated and the cooling correction factors for variations in entering air temperature. Rated GPM 1.5; Minimum CFM 152; Rated CFM 190; Maximum CFM 228.

Table 27. Heating capacities 0.5 tons (gross) - GEVG006

EWT	GPM	Htg Cap Mbtuh	Absorb Mbtuh	Comp Pwr kW	LWT	Feet Head
25	1.0	4.2	2.7	0.45	19.60	1.4
25	1.2	4.2	2.6	0.46	20.70	2.0
25	1.4	4.3	2.7	0.46	21.10	2.6
25	1.5	4.3	2.7	0.46	21.40	3.0
25	1.6	4.4	2.8	0.46	21.50	3.4
25	1.7	4.4	2.8	0.46	21.70	3.7
25	1.8	4.4	2.8	0.46	21.90	4.1
32	1.0	4.7	3.1	0.47	25.80	1.3
32	1.2	4.8	3.2	0.48	26.70	1.8
32	1.4	4.9	3.3	0.48	27.30	2.4

Table 27. Heating capacities 0.5 tons (gross) - GEVG006 (continued)

EWT	GPM	Htg Cap Mbtuh	Absorb Mbtuh	Comp Pwr kW	LWT	Feet Head
32	1.5	4.9	3.3	0.48	27.60	2.7
32	1.6	4.9	3.3	0.48	27.90	3.0
32	1.7	4.9	3.3	0.48	28.10	3.4
32	1.8	4.9	3.3	0.48	28.30	3.7
45	1.0	6.1	4.4	0.51	36.20	1.1
45	1.2	6.3	4.6	0.51	37.30	1.5
45	1.4	6.4	4.7	0.51	38.30	2.1
45	1.5	6.4	4.7	0.51	38.70	2.3
45	1.6	6.5	4.8	0.51	39.0	2.6
45	1.7	6.5	4.8	0.51	39.4	2.9
45	1.8	6.5	4.7	0.51	39.8	3.2
55	1.0	7.3	5.5	0.53	44.0	1.0
55	1.2	7.4	5.6	0.53	45.7	1.4
55	1.4	7.6	5.8	0.53	46.7	1.9
55	1.5	7.6	5.8	0.54	47.3	2.1
55	1.6	7.7	5.9	0.54	47.6	2.4
55	1.7	7.7	5.9	0.54	48.1	2.6
55	1.8	7.7	5.9	0.54	48.4	2.9
68	1.0	8.6	6.7	0.56	54.6	0.9
68	1.2	8.8	6.9	0.56	56.5	1.3
68	1.4	8.9	7.0	0.56	58.0	1.7
68	1.5	9.0	7.1	0.56	58.5	1.9
68	1.6	9.1	7.2	0.57	59.0	2.2
68	1.7	9.1	7.2	0.57	59.5	2.4
68	1.8	9.1	7.2	0.57	60.0	2.7
75	1.0	9.2	7.3	0.57	60.4	0.9
75	1.2	9.4	7.4	0.57	62.7	1.2
75	1.4	9.6	7.6	0.58	64.1	1.6
75	1.5	9.6	7.6	0.58	64.9	1.9
75	1.6	9.7	7.7	0.58	65.4	2.1
75	1.7	9.8	7.8	0.58	65.8	2.3
75	1.8	9.8	7.8	0.58	66.3	2.6
86	1.0	10.0	8.0	0.59	70.0	0.8
86	1.2	10.3	8.3	0.59	72.2	1.2
86	1.4	10.5	8.5	0.60	73.9	1.6
86	1.5	10.5	8.5	0.60	74.7	1.8
86	1.6	10.6	8.6	0.60	75.3	2.0
86	1.7	10.7	8.6	0.60	75.9	2.2
86	1.8	10.7	8.6	0.60	76.4	2.4

Note: Heating performance data is tabulated at 68.0°F DB at the ANSI/AHRI/ASHRAE/ISO13256-1 rated cfm. For conditions other than what is tabulated, multipliers must be used to correct performance. See performance correction tables for fan correction factors for CFM other than rated and the heating correction factors for variation in entering air temperatures. Rated GPM 1.5;Minimum CFM 152; Rated CFM 190; Maximum CFM 228.

Table 28. Fan correction factors 0.5 tons - GEVG006

Entering cfm	Cooling Capacity	Sensible Capacity	Cooling Input Watts	Heating Capacity	Heating Input Watts
152	0.951	0.886	1.009	0.966	1.106
162	0.966	0.917	1.006	0.976	1.074
171	0.978	0.944	1.004	0.985	1.048
181	0.990	0.974	1.002	0.993	1.022
190	1.000	1.000	1.000	1.000	1.000
209	1.019	1.055	0.996	1.013	0.960
219	1.027	1.083	0.995	1.019	0.941
228	1.034	1.108	0.993	1.023	0.926

Table 29. Correction factors for variation in entering air temperature 0.5 tons, GEVG006

Cooling Entering Air WB°F	Cooling Capacity	Cooling Input Watts	Sensible vs. Entering Dry Bulb Multipliers					Heating Entering Air DB°F	Heating Capacity	Heating Input Watts
			65.6	70.6	75.6	80.6	85.6			
49.4	0.855	1.017	0.978	1.079	1.160	*	*	53.0	1.054	0.850
56.3	0.855	1.018	0.820	0.972	1.097	*	*	58.0	1.036	0.901
60.3	0.882	1.015	0.681	0.864	1.017	1.146	*	63.0	1.019	0.950
63.2	0.941	1.009	0.558	0.763	0.936	1.084	1.212	68.0	1.000	1.000
66.2	1.000	1.000	–	0.639	0.833	1.000	1.145	73.0	0.981	1.051
72.1	1.112	0.975	–	–	0.584	0.787	0.966	78.0	0.962	1.104
77.1	1.214	0.947	–	–	–	–	0.774	83.0	0.942	1.159

Note: * = Sensible equals total capacity

Cooling and Heating Capacities 0.75 tons

Table 30. Cooling capacities 0.75 tons (net) - GEHE009

EWT	GPM	Total Mbtuh	Sen Mbtuh	SHR	Power kW	EER	Reject Mbtuh	LWT	Feet Head
45	1.4	10.2	7.6	0.75	0.55	18.6	12.1	62.3	2.0
45	1.7	10.3	7.7	0.74	0.54	19.0	12.2	59.4	2.8
45	1.9	10.4	7.7	0.74	0.54	19.3	12.3	57.9	3.4
45	2.1	10.5	7.7	0.74	0.54	19.5	12.3	56.7	4.0
45	2.2	10.5	7.8	0.74	0.54	19.6	12.4	56.2	4.4
45	2.3	10.6	7.8	0.74	0.54	19.7	12.4	55.8	4.7
45	2.5	10.6	7.8	0.73	0.53	19.9	12.4	55.0	5.5
55	1.4	9.8	7.5	0.76	0.58	16.8	11.7	71.8	1.9
55	1.7	9.9	7.5	0.76	0.57	17.3	11.8	68.9	2.7
55	1.9	9.9	7.5	0.76	0.57	17.5	11.9	67.5	3.2
55	2.1	10.0	7.5	0.76	0.56	17.7	11.9	66.3	3.9
55	2.2	10.0	7.6	0.76	0.56	17.8	11.9	65.8	4.2
55	2.3	10.0	7.6	0.75	0.56	17.9	11.9	65.4	4.6
55	2.5	10.0	7.6	0.75	0.56	18.0	11.9	64.6	5.3
68	1.4	9.3	7.3	0.78	0.64	14.6	11.5	84.4	1.8
68	1.7	9.4	7.3	0.78	0.62	15.0	11.5	81.5	2.5
68	1.9	9.4	7.3	0.78	0.62	15.2	11.5	80.1	3.1

Table 30. Cooling capacities 0.75 tons (net) - GEHE009 (continued)

EWT	GPM	Total Mbtuh	Sen Mbtuh	SHR	Power kW	EER	Reject Mbtuh	LWT	Feet Head
68	2.1	9.4	7.3	0.78	0.61	15.4	11.5	79.0	3.7
68	2.2	9.5	7.4	0.78	0.61	15.5	11.5	78.5	4.0
68	2.3	9.5	7.4	0.78	0.61	15.5	11.6	78.0	4.3
68	2.5	9.5	7.4	0.78	0.61	15.6	11.6	77.3	5.0
77	1.4	9.0	7.2	0.80	0.69	13.0	11.4	93.3	1.8
77	1.7	9.1	7.2	0.79	0.68	13.4	11.4	90.4	2.5
77	1.9	9.1	7.2	0.79	0.67	13.6	11.4	89.0	3.0
77	2.1	9.1	7.2	0.79	0.66	13.7	11.4	87.8	3.6
77	2.2	9.1	7.2	0.79	0.66	13.8	11.4	87.4	3.9
77	2.3	9.1	7.2	0.79	0.66	13.9	11.4	86.9	4.2
77	2.5	9.2	7.2	0.79	0.65	14.0	11.4	86.1	4.9
86	1.4	8.7	7.1	0.81	0.76	11.6	11.3	102.2	1.7
86	1.7	8.8	7.1	0.81	0.74	11.9	11.3	99.3	2.4
86	1.9	8.8	7.1	0.81	0.73	12.0	11.3	97.9	2.9
86	2.1	8.8	7.1	0.81	0.72	12.2	11.3	96.7	3.5
86	2.2	8.8	7.1	0.81	0.72	12.2	11.3	96.2	3.8
86	2.3	8.8	7.1	0.81	0.72	12.3	11.3	95.8	4.1
86	2.5	8.8	7.1	0.81	0.72	12.4	11.3	95.0	4.8
95	1.4	8.5	7.0	0.82	0.84	10.1	11.3	111.2	1.7
95	1.7	8.5	7.0	0.82	0.82	10.4	11.3	108.3	2.3
95	1.9	8.5	7.0	0.82	0.81	10.5	11.3	106.9	2.9
95	2.1	8.5	7.0	0.82	0.80	10.6	11.3	105.7	3.4
95	2.2	8.5	7.0	0.82	0.80	10.6	11.2	105.2	3.7
95	2.3	8.5	7.0	0.82	0.80	10.7	11.2	104.8	4.0
95	2.5	8.5	7.0	0.82	0.79	10.8	11.2	104.0	4.6
105	1.4	8.2	6.9	0.84	0.96	8.6	11.5	121.4	1.6
105	1.7	8.2	6.9	0.84	0.94	8.8	11.4	118.4	2.3
105	1.9	8.2	6.9	0.84	0.92	8.9	11.4	117.0	2.8
105	2.1	8.2	6.9	0.84	0.92	9.0	11.3	115.8	3.3
105	2.2	8.2	6.9	0.84	0.91	9.0	11.3	115.3	3.6
105	2.3	8.2	6.9	0.84	0.91	9.0	11.3	114.8	3.9
105	2.5	8.2	6.9	0.84	0.90	9.1	11.3	114.0	4.5
110	1.4	8.1	6.8	0.84	1.06	7.7	11.8	126.8	1.6
110	1.7	8.1	6.8	0.84	1.04	7.9	11.7	123.7	2.2
110	1.9	8.1	6.8	0.84	1.01	8.0	11.5	122.1	2.7
110	2.1	8.1	6.8	0.84	1.01	8.0	11.6	121.0	3.3
110	2.2	8.1	6.8	0.84	1.00	8.1	11.5	120.5	3.5
110	2.3	8.1	6.8	0.84	0.99	8.1	11.5	120.0	3.8
110	2.5	8.1	6.8	0.84	1.00	8.1	11.5	119.2	4.4

Note: Cooling performance data is tabulated at 80.6°F DB/66.2°F WB entering air at ANSI/AHRI/ASHRAE/ISO13256-1 rated cfm. For ANSI/AHRI/ASHRAE/ISO13256-1 certified ratings, refer to the ANSI/AHRI/ASHRAE/ISO13256-1 WLHP, GWHP and GLHP performance table. See Performance correction tables to correct performance at conditions other than those tabulated. Data shown is for unit performance only. Interpolation of data is permissible; extrapolation is not. Rated GPM: 2.1 Minimum cfm 228; Rated cfm 285; Maximum cfm 342.

Table 31. Heating capacities 0.75 tons (net) - GEHE009

EWT	GPM	Htg Cap Mbtuh	Absorb Mbtuh	Power kW	COP	LWT	Feet Head
25	1.4	6.4	4.2	0.64	2.9	19.0	2.8
25	1.7	6.5	4.3	0.64	3.0	19.9	4.0
25	1.9	6.6	4.4	0.64	3.0	20.4	4.8
25	2.1	6.6	4.4	0.64	3.0	20.8	5.7
25	2.2	6.7	4.5	0.64	3.0	20.9	6.2
25	2.3	6.7	4.5	0.64	3.0	21.1	6.7
25	2.5	6.7	4.5	0.65	3.1	21.4	7.8
32	1.4	7.1	4.8	0.65	3.2	25.1	2.8
32	1.7	7.2	5.0	0.65	3.2	26.1	3.9
32	1.9	7.3	5.1	0.66	3.3	26.7	4.7
32	2.1	7.4	5.1	0.66	3.3	27.1	5.6
32	2.2	7.4	5.1	0.66	3.3	27.3	6.0
32	2.3	7.4	5.2	0.66	3.3	27.5	6.5
32	2.5	7.5	5.2	0.66	3.3	27.8	7.5
45	1.4	8.5	6.2	0.68	3.7	36.1	2.2
45	1.7	8.7	6.4	0.68	3.8	37.5	3.1
45	1.9	8.8	6.5	0.68	3.8	38.2	3.8
45	2.1	8.9	6.6	0.68	3.8	38.7	4.5
45	2.2	8.9	6.6	0.68	3.8	39.0	4.9
45	2.3	9.0	6.6	0.68	3.9	39.2	5.2
45	2.5	9.0	6.7	0.68	3.9	39.6	6.1
55	1.4	9.6	7.3	0.69	4.1	44.6	2.1
55	1.7	9.8	7.5	0.70	4.2	46.2	3.0
55	1.9	9.9	7.6	0.70	4.2	47.0	3.6
55	2.1	10.1	7.7	0.70	4.2	47.7	4.3
55	2.2	10.1	7.7	0.70	4.2	48.0	4.7
55	2.3	10.1	7.8	0.70	4.3	48.3	5.0
55	2.5	10.2	7.8	0.70	4.3	48.7	5.8
68	1.4	11.1	8.6	0.71	4.6	55.7	2.0
68	1.7	11.4	8.9	0.72	4.6	57.5	2.8
68	1.9	11.5	9.1	0.72	4.7	58.5	3.5
68	2.1	11.6	9.2	0.72	4.7	59.3	4.1
68	2.2	11.6	9.2	0.72	4.7	59.6	4.5
68	2.3	11.7	9.2	0.72	4.7	60.0	4.8
68	2.5	11.8	9.3	0.72	4.8	60.5	5.6
75	1.4	11.9	9.4	0.73	4.8	61.5	2.0
75	1.7	12.2	9.7	0.73	4.9	63.6	2.8
75	1.9	12.3	9.8	0.73	4.9	64.7	3.4
75	2.1	12.5	10.0	0.74	5.0	65.5	4.0
75	2.2	12.6	10.0	0.74	5.0	65.9	4.3
75	2.3	12.6	10.1	0.74	5.0	66.3	4.7

Table 31. Heating capacities 0.75 tons (net) - GEHE009 (continued)

EWT	GPM	Htg Cap Mbtuh	Absorb Mbtuh	Power kW	COP	LWT	Feet Head
75	2.5	12.7	10.1	0.74	5.0	66.9	5.4
86	1.4	13.2	10.6	0.75	5.1	70.8	1.9
86	1.7	13.5	10.9	0.76	5.2	73.2	2.7
86	1.9	13.7	11.1	0.76	5.3	74.3	3.3
86	2.1	13.8	11.2	0.76	5.3	75.3	3.9
86	2.2	13.9	11.3	0.76	5.3	75.8	4.2
86	2.3	13.9	11.3	0.77	5.3	76.2	4.5
86	2.5	14.1	11.4	0.77	5.3	76.9	5.2

Note: Heating performance data is tabulated at 68°F DB entering air at ANSI/AHRI/ASHRAE/ISO13256-1 rated cfm. For ANSI/AHRI/ASHRAE/ISO13256-1 certified ratings, refer to the ANSI/AHRI/ASHRAE/ISO13256-1 WLHP, GWHP and GLHP performance table. See performance correction tables to correct performance at conditions other than those tabulated. Data shown is for unit performance only. Interpolation of data is permissible; extrapolation is not. Rated GPM: 2.1 Minimum cfm 228; Rated cfm 285; Maximum cfm 342.

Table 32. Fan correction factors 0.75 tons - GEHE009

Entering cfm	Cooling Capacity	Sensible Capacity	Cooling Input Watts	Heating Capacity	Heating Input Watts
228	0.960	0.876	1.003	0.984	1.087
242	0.971	0.907	1.002	0.990	1.060
257	0.982	0.937	1.002	0.990	1.036
271	0.992	0.969	1.002	0.995	1.017
285	1.000	1.000	1.000	1.000	1.000
314	1.017	1.060	1.001	1.003	0.969
328	1.022	1.088	0.999	1.007	0.957
342	1.028	1.121	0.998	1.008	0.946

Table 33. Correction factors for variation in entering air temperature 0.75 tons, GEHE009

Cooling Entering Air WB°F	Cooling Capacity	Cooling Input Watts	Sensible vs. Entering Dry Bulb Multipliers					Heating Entering Air DB°F	Heating Capacity	Heating Input Watts
			65.6	70.6	75.6	80.6	85.6			
49.4	0.949	1.02	0.952	1.031	1.103	–	*	53	1.03	0.879
56.3	0.948	1.021	0.805	0.951	1.102	*	*	58	1.018	0.915
60.3	0.947	1.021	0.605	0.838	1.059	*	*	63	1.007	0.956
63.2	0.947	1.019	0.455	0.69	0.923	1.138	*	68	1.000	1.000
66.2	1.000	1.000	–	0.534	0.767	1.000	1.221	73	0.992	1.046
72.1	1.074	0.969	–	–	0.452	0.686	0.915	78	0.983	1.098
77.1	1.127	0.950	–	–	–	0.408	0.644	83	0.979	1.153

Note: * = Sensible equals total capacity

Table 34. Cooling capacities 0.75 tons (gross) - GEVG009

EWT	GPM	Total Mbtuh	Sen Mbtuh	SHR	Comp Pwr kW	Reject Mbtuh	LWT	Feet Head
45	1.5	10.5	8.3	0.79	0.33	11.6	60.5	1.7
45	1.8	10.6	8.4	0.79	0.31	11.7	58.0	2.5
45	2.0	10.6	8.4	0.79	0.30	11.6	56.6	3.1
45	2.3	10.6	8.4	0.79	0.30	11.6	55.3	3.9
45	2.4	10.6	8.4	0.79	0.29	11.6	54.7	4.4
45	2.5	10.6	8.4	0.79	0.29	11.6	54.3	4.7

Table 34. Cooling capacities 0.75 tons (gross) - GEVG009 (continued)

EWT	GPM	Total Mbtuh	Sen Mbtuh	SHR	Comp Pwr kW	Reject Mbtuh	LWT	Feet Head
45	2.7	10.7	8.4	0.79	0.29	11.7	53.7	5.4
55	1.5	10.1	8.1	0.80	0.39	11.4	70.2	1.5
55	1.8	10.2	8.2	0.80	0.37	11.5	67.8	2.1
55	2.0	10.2	8.2	0.80	0.37	11.4	66.4	2.6
55	2.3	10.2	8.2	0.80	0.36	11.4	65.1	3.3
55	2.4	10.2	8.2	0.80	0.36	11.4	64.5	3.8
55	2.5	10.2	8.2	0.80	0.35	11.4	64.1	4.1
55	2.7	10.3	8.3	0.81	0.35	11.5	63.5	4.7
68	1.5	9.7	7.9	0.81	0.46	11.3	83.1	1.3
68	1.8	9.7	7.9	0.81	0.45	11.2	80.4	1.9
68	2.0	9.8	8.0	0.82	0.44	11.3	79.3	2.3
68	2.3	9.8	8.0	0.82	0.43	11.3	78.0	2.9
68	2.4	9.8	8.0	0.82	0.43	11.3	77.4	3.3
68	2.5	9.8	8.0	0.82	0.43	11.3	77.0	3.5
68	2.7	9.8	8.0	0.82	0.43	11.3	76.4	4.0
75	1.5	9.5	7.8	0.82	0.50	11.2	89.9	1.3
75	1.8	9.5	7.8	0.82	0.49	11.2	87.4	1.8
75	2.0	9.6	7.8	0.81	0.48	11.2	86.2	2.2
75	2.3	9.6	7.8	0.81	0.47	11.2	85.0	2.8
75	2.4	9.6	7.8	0.81	0.47	11.2	84.3	3.1
75	2.5	9.6	7.8	0.81	0.47	11.2	84.0	3.3
75	2.7	9.6	7.8	0.81	0.46	11.2	83.3	3.8
86	1.5	9.1	7.5	0.82	0.57	11.0	100.7	1.3
86	1.8	9.2	7.6	0.83	0.56	11.1	98.3	1.8
86	2.0	9.2	7.6	0.83	0.55	11.1	97.1	2.1
86	2.3	9.2	7.6	0.83	0.54	11.0	95.8	2.6
86	2.4	9.2	7.6	0.83	0.54	11.0	95.2	3.0
86	2.5	9.2	7.6	0.83	0.54	11.0	94.8	3.2
86	2.7	9.3	7.7	0.83	0.53	11.1	94.2	3.6
95	1.5	8.7	7.3	0.84	0.64	10.9	109.5	1.4
95	1.8	8.8	7.4	0.84	0.63	10.9	107.1	1.8
95	2.0	8.8	7.4	0.84	0.62	10.9	105.9	2.1
95	2.3	8.8	7.4	0.84	0.61	10.9	104.7	2.6
95	2.4	8.9	7.4	0.83	0.61	11.0	104.2	2.9
95	2.5	8.9	7.4	0.83	0.60	11.0	103.8	3.1
95	2.7	8.9	7.4	0.83	0.60	11.0	103.1	3.5
105	1.5	8.2	7.1	0.87	0.73	10.7	119.3	1.3
105	1.8	8.2	7.1	0.87	0.71	10.6	116.8	1.7
105	2.0	8.2	7.1	0.87	0.70	10.6	115.6	2.1
105	2.3	8.3	7.2	0.87	0.70	10.7	114.5	2.6
105	2.4	8.3	7.2	0.87	0.69	10.7	113.9	2.9

Table 34. Cooling capacities 0.75 tons (gross) - GEVG009 (continued)

EWT	GPM	Total Mbtuh	Sen Mbtuh	SHR	Comp Pwr kW	Reject Mbtuh	LWT	Feet Head
105	2.5	8.3	7.2	0.87	0.69	10.7	113.6	3.1
105	2.7	8.3	7.2	0.87	0.69	10.6	112.9	3.5
115	1.5	7.5	6.8	0.91	0.82	10.3	128.7	1.2
115	1.8	7.6	6.9	0.91	0.81	10.4	126.6	1.6
115	2.0	7.6	6.9	0.91	0.80	10.3	125.3	2.0
115	2.3	7.6	6.9	0.91	0.79	10.3	124.2	2.5
115	2.4	7.6	6.9	0.91	0.79	10.3	123.6	2.8
115	2.5	7.6	6.9	0.91	0.79	10.3	123.2	3.0
115	2.7	7.6	6.9	0.91	0.78	10.3	122.6	3.4

Note: Cooling performance data is tabulated at 80.6°F DB/66.2°F WB entering air at ANSI/AHRI/ASHRAE/ISO13256-1 rated cfm. For conditions other than what is tabulated, multipliers must be used to correct performance. See performance correction tables for fan correction factors for CFM other than rated and the cooling correction factors for variations in entering air temperature. Rated GPM 2.25; Minimum CFM 228; Rated CFM 285; Maximum CFM 342.

Table 35. Heating capacities 0.75 tons (gross) - GEVG009

EWT	GPM	Htg Cap Mbtuh	Absorb Mbtuh	Comp Pwr kW	LWT	Feet Head
25	1.5	5.2	3.6	0.48	20.2	2.7
25	1.8	5.4	3.8	0.48	20.8	3.8
25	2	5.5	3.9	0.48	21.1	4.6
25	2.25	5.6	4	0.48	21.4	5.7
25	2.4	5.7	4.1	0.48	21.6	6.4
25	2.5	5.7	4.1	0.48	21.7	6.8
25	2.7	5.8	4.2	0.48	21.9	7.7
32	1.5	5.8	4.1	0.49	26.5	2.3
32	1.8	6	4.3	0.49	27.2	3.2
32	2	6.1	4.4	0.49	27.6	4
32	2.25	6.2	4.5	0.49	28	4.9
32	2.4	6.2	4.5	0.49	28.3	5.5
32	2.5	6.3	4.6	0.49	28.3	6
32	2.7	6.3	4.6	0.5	28.6	6.8
45	1.5	7.7	5.9	0.53	37.1	1.7
45	1.8	7.9	6.1	0.53	38.2	2.5
45	2	8	6.2	0.54	38.8	3.1
45	2.25	8.2	6.4	0.54	39.3	3.9
45	2.4	8.2	6.4	0.54	39.7	4.4
45	2.5	8.2	6.4	0.54	39.9	4.7
45	2.7	8.3	6.5	0.54	40.2	5.4
55	1.5	8.9	7	0.55	45.7	1.5
55	1.8	9.2	7.3	0.56	46.9	2.1
55	2	9.3	7.4	0.56	47.6	2.6
55	2.25	9.4	7.5	0.56	48.3	3.3
55	2.4	9.4	7.5	0.56	48.8	3.8
55	2.5	9.5	7.6	0.56	48.9	4.1

Table 35. Heating capacities 0.75 tons (gross) - GEVG009 (continued)

EWT	GPM	Htg Cap Mbtuh	Absorb Mbtuh	Comp Pwr kW	LWT	Feet Head
55	2.7	9.5	7.6	0.56	49.4	4.7
68	1.5	10.4	8.4	0.57	56.8	1.3
68	1.8	10.6	8.6	0.58	58.4	1.9
68	2	10.7	8.7	0.58	59.3	2.3
68	2.25	10.8	8.8	0.58	60.2	2.9
68	2.4	10.9	8.9	0.58	60.6	3.3
68	2.5	10.9	8.9	0.58	60.9	3.5
68	2.7	10.9	8.9	0.58	61.4	4
75	1.5	11.3	9.3	0.58	62.6	1.3
75	1.8	11.5	9.5	0.59	64.4	1.8
75	2	11.6	9.6	0.59	65.4	2.2
75	2.25	11.7	9.7	0.59	66.4	2.8
75	2.4	11.8	9.8	0.59	66.8	3.1
75	2.5	11.8	9.8	0.59	67.2	3.3
75	2.7	11.9	9.9	0.59	67.7	3.8
86	1.5	12.6	10.6	0.59	71.9	1.3
86	1.8	12.8	10.8	0.6	74	1.8
86	2	12.9	10.9	0.6	75.1	2.1
86	2.25	13	11	0.6	76.2	2.6
86	2.4	13.1	11.1	0.6	76.8	3
86	2.5	13.1	11.1	0.6	77.1	3.2
86	2.7	13.2	11.2	0.6	77.7	3.6

Note: Heating performance data is tabulated at 68.0°F DB at the ANSI/AHRI/ASHRAE/ISO13256-1 rated cfm. For conditions other than what is tabulated, multipliers must be used to correct performance. See performance correction tables for fan correction factors for CFM other than rated and the heating correction factors for variation in entering air temperatures. Rated GPM 2.25;Minimum CFM 228; Rated CFM 285; Maximum CFM 342.

Table 36. Fan correction factors 0.75 tons - GEVG009

Entering cfm	Cooling Capacity	Sensible Capacity	Cooling Input Watts	Heating Capacity	Heating Input Watts
228	0.959	0.876	1.010	0.978	1.098
242	0.971	0.907	1.007	0.984	1.070
257	0.982	0.940	1.004	0.990	1.043
271	0.991	0.970	1.002	0.995	1.020
285	1.000	1.000	1.000	1.000	1.000
314	1.016	1.061	0.996	1.008	0.963
328	1.022	1.091	0.995	1.011	0.948
342	1.028	1.119	0.993	1.014	0.933

Table 37. Correction factors for variation in entering air temperature 0.75 tons, GEVG009

Cooling Entering Air WB ºF	Cooling Capacity	Cooling Input Watts	Sensible vs. Entering Dry Bulb Multipliers					Heating Entering Air DB ºF	Heating Capacity	Heating Input Watts
			65.6	70.6	75.6	80.6	85.6			
49.4	0.905	1.016	0.950	1.037	1.106	*	*	53.0	1.045	0.832
56.3	0.905	1.017	0.805	0.956	1.073	*	*	58.0	1.031	0.888
60.3	0.917	1.014	0.655	0.851	1.004	1.126	*	63.0	1.016	0.943

Table 37. Correction factors for variation in entering air temperature 0.75 tons, GEVG009 (continued)

Cooling Entering Air WB ºF	Cooling Capacity	Cooling Input Watts	Sensible vs. Entering Dry Bulb Multipliers					Heating Entering Air DB ºF	Heating Capacity	Heating Input Watts
			65.6	70.6	75.6	80.6	85.6			
63.2	0.954	1.009	0.515	0.746	0.929	1.074	*	68.0	1.000	1.000
66.2	1.000	1.000	–	0.612	0.827	1.000	1.142	73.0	0.983	1.058
72.1	1.118	0.972	–	–	0.558	0.789	0.980	78.0	0.966	1.117
77.1	1.217	0.937	–	–	–	–	0.782	83.0	0.949	1.176

Note: * = Sensible equals total capacity

Cooling and Heating Capacities 1 ton

Table 38. Cooling capacities 1 ton (net) - GEHE012

EWT	GPM	Total Mbtuh	Sen Mbtuh	SHR	Power kW	EER	Reject Mbtuh	LWT	Feet Head
45	1.8	12.6	9.7	0.76	0.63	20.0	14.8	61.5	1.9
45	2.2	12.7	9.7	0.76	0.62	20.6	14.8	58.5	2.7
45	2.5	12.7	9.7	0.76	0.61	21.0	14.8	56.8	3.4
45	2.8	12.8	9.7	0.76	0.60	21.3	14.8	55.6	4.1
45	2.9	12.8	9.7	0.76	0.60	21.4	14.8	55.2	4.4
45	3.1	12.8	9.7	0.76	0.59	21.5	14.8	54.6	5.0
45	3.4	12.8	9.7	0.76	0.59	21.7	14.8	53.7	5.8
55	1.8	12.4	9.6	0.77	0.70	17.7	14.8	71.4	1.8
55	2.2	12.4	9.6	0.77	0.68	18.2	14.7	68.4	2.6
55	2.5	12.4	9.6	0.77	0.67	18.5	14.7	66.8	3.3
55	2.8	12.5	9.6	0.77	0.66	18.8	14.7	65.5	4.0
55	2.9	12.5	9.6	0.77	0.66	18.8	14.7	65.2	4.2
55	3.1	12.5	9.6	0.77	0.66	19.0	14.7	64.5	4.8
55	3.4	12.5	9.6	0.77	0.65	19.2	14.7	63.7	5.6
68	1.8	12.0	9.4	0.79	0.80	14.9	14.7	84.3	1.7
68	2.2	12.0	9.4	0.78	0.78	15.4	14.7	81.3	2.5
68	2.5	12.0	9.4	0.78	0.77	15.7	14.7	79.7	3.1
68	2.8	12.1	9.4	0.78	0.76	15.9	14.6	78.5	3.8
68	2.9	12.1	9.4	0.78	0.76	15.9	14.6	78.1	4.0
68	3.1	12.1	9.4	0.78	0.75	16.0	14.6	77.4	4.5
68	3.4	12.1	9.5	0.78	0.75	16.2	14.6	76.6	5.3
77	1.8	11.7	9.3	0.80	0.88	13.3	14.7	93.3	1.7
77	2.2	11.7	9.3	0.80	0.86	13.6	14.6	90.3	2.4
77	2.5	11.7	9.3	0.80	0.85	13.9	14.6	88.7	3.0
77	2.8	11.7	9.3	0.79	0.84	14.0	14.6	87.4	3.7
77	2.9	11.7	9.3	0.79	0.83	14.1	14.6	87.1	3.9
77	3.1	11.8	9.3	0.79	0.83	14.2	14.6	86.4	4.4
77	3.4	11.8	9.3	0.79	0.82	14.3	14.6	85.6	5.2
86	1.8	11.3	9.2	0.81	0.97	11.7	14.6	102.3	1.6
86	2.2	11.4	9.2	0.81	0.95	12.0	14.6	99.3	2.3
86	2.5	11.4	9.2	0.81	0.93	12.2	14.6	97.7	2.9

Table 38. Cooling capacities 1 ton (net) - GEHE012 (continued)

EWT	GPM	Total Mbtuh	Sen Mbtuh	SHR	Power kW	EER	Reject Mbtuh	LWT	Feet Head
86	2.8	11.4	9.2	0.81	0.92	12.4	14.5	96.4	3.6
86	2.9	11.4	9.2	0.81	0.92	12.4	14.5	96.0	3.8
86	3.1	11.4	9.2	0.81	0.91	12.5	14.5	95.4	4.3
86	3.4	11.4	9.2	0.81	0.91	12.6	14.5	94.5	5.0
95	1.8	11.0	9.0	0.82	1.07	10.2	14.6	111.3	1.6
95	2.2	11.0	9.1	0.82	1.05	10.5	14.6	108.2	2.3
95	2.5	11.0	9.1	0.82	1.03	10.7	14.5	106.6	2.9
95	2.8	11.0	9.1	0.82	1.02	10.8	14.5	105.4	3.5
95	2.9	11.0	9.1	0.82	1.02	10.8	14.5	105.0	3.7
95	3.1	11.0	9.1	0.82	1.01	10.9	14.5	104.3	4.2
95	3.4	11.0	9.1	0.82	1.01	11.0	14.5	103.5	4.9
105	1.8	10.5	8.9	0.84	1.21	8.7	14.6	121.3	1.6
105	2.2	10.5	8.9	0.84	1.18	9.0	14.6	118.2	2.2
105	2.5	10.6	8.9	0.84	1.16	9.1	14.5	116.6	2.8
105	2.8	10.6	8.9	0.84	1.15	9.2	14.5	115.3	3.4
105	2.9	10.6	8.9	0.84	1.14	9.2	14.5	115.0	3.6
105	3.1	10.6	8.9	0.84	1.14	9.3	14.5	114.3	4.1
105	3.4	10.6	8.9	0.84	1.13	9.3	14.4	113.5	4.8
110	1.8	10.2	8.8	0.86	1.29	7.9	14.6	126.2	1.5
110	2.2	10.2	8.8	0.86	1.26	8.2	14.5	123.2	2.2
110	2.5	10.3	8.8	0.85	1.24	8.3	14.5	121.6	2.7
110	2.8	10.3	8.8	0.85	1.23	8.4	14.5	120.4	3.3
110	2.9	10.3	8.8	0.85	1.22	8.4	14.5	120.0	3.6
110	3.1	10.3	8.8	0.85	1.22	8.5	14.5	119.3	4.0
110	3.4	10.3	8.8	0.85	1.21	8.5	14.5	118.5	4.7

Note: Cooling performance data is tabulated at 80.6°F DB/66.2°F WB entering air at ANSI/AHRI/ASHRAE/ISO13256-1 rated cfm. For ANSI/AHRI/ASHRAE/ISO13256-1 certified ratings, refer to the ANSI/AHRI/ASHRAE/ISO13256-1 WLHP, GWHP and GLHP performance table. See performance correction tables to correct performance at conditions other than those tabulated. Data shown is for unit performance only. Interpolation of data is permissible; extrapolation is not. Rated GPM: 2.8 Minimum cfm 304; Rated cfm 380; Maximum cfm 456.

Table 39. Heating capacities 1 ton (net) - GEHE012

EWT	GPM	Htg Cap Mbtuh	Absorb Mbtuh	Power kW	COP	LWT	Feet Head
25	1.8	8.5	5.5	0.87	2.8	18.9	2.8
25	2.2	8.6	5.7	0.87	2.9	19.9	4.0
25	2.5	8.7	5.7	0.88	2.9	20.4	5.0
25	2.8	8.8	5.8	0.88	2.9	20.8	6.1
25	2.9	8.8	5.8	0.88	2.9	21.0	6.5
25	3.1	8.9	5.9	0.88	3.0	21.2	7.3
25	3.4	8.9	5.9	0.88	3.0	21.5	8.5
32	1.8	9.3	6.3	0.89	3.1	25.0	2.7
32	2.2	9.5	6.5	0.89	3.1	26.1	3.9
32	2.5	9.6	6.6	0.89	3.2	26.7	4.8
32	2.8	9.7	6.7	0.89	3.2	27.2	5.9

Table 39. Heating capacities 1 ton (net) - GEHE012 (continued)

EWT	GPM	Htg Cap Mbtuh	Absorb Mbtuh	Power kW	COP	LWT	Feet Head
32	2.9	9.8	6.7	0.89	3.2	27.4	6.3
32	3.1	9.8	6.7	0.89	3.2	27.6	7.0
32	3.4	9.9	6.8	0.90	3.2	28.0	8.3
45	1.8	11.2	8.0	0.92	3.6	36.1	2.2
45	2.2	11.4	8.3	0.92	3.6	37.5	3.1
45	2.5	11.5	8.4	0.92	3.7	38.3	3.9
45	2.8	11.6	8.5	0.92	3.7	38.9	4.7
45	2.9	11.7	8.5	0.92	3.7	39.1	5.0
45	3.1	11.7	8.6	0.92	3.7	39.5	5.7
45	3.4	11.8	8.7	0.92	3.7	39.9	6.6
55	1.8	12.5	9.3	0.94	3.9	44.6	2.1
55	2.2	12.8	9.6	0.94	4.0	46.3	3.0
55	2.5	12.9	9.7	0.94	4.0	47.2	3.7
55	2.8	13.1	9.9	0.94	4.1	48.0	4.6
55	2.9	13.2	9.9	0.95	4.1	48.1	4.8
55	3.1	13.2	10.0	0.95	4.1	48.5	5.4
55	3.4	13.3	10.0	0.95	4.1	49.1	6.4
68	1.8	14.3	11.0	0.96	4.4	55.7	2.0
68	2.2	14.6	11.3	0.97	4.4	57.7	2.9
68	2.5	14.8	11.5	0.97	4.5	58.8	3.6
68	2.8	15.0	11.7	0.98	4.5	59.6	4.3
68	2.9	15.1	11.8	0.98	4.5	59.9	4.6
68	3.1	15.1	11.8	0.97	4.6	60.4	5.2
68	3.4	15.3	11.9	0.98	4.6	61.0	6.1
75	1.8	15.3	12.0	0.98	4.6	61.7	2.0
75	2.2	15.7	12.3	0.98	4.7	63.8	2.8
75	2.5	15.9	12.5	0.99	4.7	65.0	3.5
75	2.8	16.0	12.7	0.99	4.7	66.0	4.2
75	2.9	16.1	12.8	0.99	4.8	66.2	4.5
75	3.1	16.2	12.8	0.99	4.8	66.7	5.1
75	3.4	16.4	13.0	1.00	4.8	67.4	5.9
86	1.8	16.8	13.4	1.01	4.9	71.1	1.9
86	2.2	17.2	13.8	1.01	5.0	73.5	2.7
86	2.5	17.4	14.0	1.02	5.0	74.8	3.4
86	2.8	17.7	14.2	1.02	5.1	75.9	4.1
86	2.9	17.7	14.3	1.02	5.1	76.2	4.4
86	3.1	17.8	14.3	1.02	5.1	76.8	4.9
86	3.4	17.9	14.4	1.02	5.1	77.5	5.7

Note: Heating performance data is tabulated at 68°F DB entering air at ANSI/AHRI/ASHRAE/ISO13256-1 rated cfm. For ANSI/AHRI/ASHRAE/ISO13256-1 certified ratings, refer to the ANSI/AHRI/ASHRAE/ISO13256-1 WLHP, GWHP and GLHP performance table. See performance correction tables to correct performance at conditions other than those tabulated. Data shown is for unit performance only. Interpolation of data is permissible; extrapolation is not. Rated GPM: 2.8 Minimum cfm 304; Rated cfm 380; Maximum cfm 456

Table 40. Fan correction factors 1 ton - GEHE012

Entering cfm	Cooling Capacity	Sensible Capacity	Cooling Input Watts	Heating Capacity	Heating Input Watts
304	0.959	0.874	1.005	0.987	1.094
323	0.970	0.906	1.003	0.989	1.065
342	0.981	0.937	1.002	0.996	1.041
361	0.991	0.969	1.001	0.994	1.016
380	1.000	1.000	1.000	1.000	1.000
418	1.017	1.062	0.999	1.002	0.964
437	1.024	1.091	0.998	1.006	0.952
456	1.031	1.121	0.997	1.004	0.937

Table 41. Correction factors for variation in entering air temperature 1 ton, GEHE012

Cooling Entering Air WB°F	Cooling Capacity	Cooling Input Watts	Sensible vs. Entering Dry Bulb Multipliers					Heating Entering Air DB°F	Heating Capacity	Heating Input Watts
			65.6	70.6	75.6	80.6	85.6			
49.4	0.912	1.012	0.951	1.027	1.085	*	*	53.0	1.049	0.833
56.3	0.917	1.014	0.811	0.965	1.077	*	*	58.0	1.033	0.888
60.3	0.927	1.012	0.646	0.855	1.010	1.130	*	63.0	1.017	0.944
63.2	0.961	1.008	0.489	0.741	0.931	1.077	*	68.0	1.000	1.000
66.2	1.000	1.000	–	0.593	0.823	1.000	1.141	73.0	0.982	1.058
72.1	1.104	0.975	–	–	0.532	0.778	0.973	78.0	0.964	1.116
77.1	1.198	0.944	–	–	–	–	0.768	83.0	0.946	1.176

Note: * = Sensible equals total capacity

Table 42. Cooling capacities 1 ton (gross) - GEVG012

EWT	GPM	Total Mbtuh	Sen Mbtuh	SHR	Comp Pwr kW	Reject Mbtuh	LWT	Feet Head
45	2.0	11.9	9.9	0.83	0.42	13.3	58.3	3.4
45	2.4	12.0	10.0	0.83	0.40	13.4	56.2	4.7
45	2.7	12.1	10.1	0.83	0.39	13.4	54.9	5.8
45	3.0	12.1	10.1	0.83	0.38	13.4	53.9	7.1
45	3.2	12.1	10.1	0.83	0.38	13.4	53.4	7.9
45	3.3	12.1	10.1	0.83	0.38	13.4	53.1	8.4
45	3.6	12.1	10.1	0.83	0.37	13.4	52.4	9.7
55	2.0	11.7	9.7	0.83	0.50	13.4	68.4	3.1
55	2.4	11.8	9.8	0.83	0.48	13.5	66.3	4.3
55	2.7	11.8	9.8	0.83	0.47	13.4	64.9	5.3
55	3.0	11.9	9.9	0.83	0.46	13.5	64.0	6.5
55	3.2	11.9	9.9	0.83	0.46	13.5	63.4	7.3
55	3.3	11.9	9.9	0.83	0.46	13.5	63.2	7.7
55	3.6	11.8	9.8	0.83	0.45	13.3	62.4	9.0
68	2.0	11.2	9.5	0.85	0.61	13.3	81.3	2.8
68	2.4	11.3	9.6	0.85	0.59	13.3	79.1	3.9
68	2.7	11.3	9.6	0.85	0.58	13.3	77.9	4.9
68	3.0	11.4	9.7	0.85	0.57	13.3	76.9	5.9
68	3.2	11.4	9.7	0.85	0.56	13.3	76.3	6.7

Table 42. Cooling capacities 1 ton (gross) - GEVG012 (continued)

EWT	GPM	Total Mbtuh	Sen Mbtuh	SHR	Comp Pwr kW	Reject Mbtuh	LWT	Feet Head
68	3.3	11.4	9.7	0.85	0.56	13.3	76.1	7.1
68	3.6	11.3	9.6	0.85	0.56	13.2	75.3	8.2
75	2.0	10.9	9.4	0.86	0.66	13.1	88.1	2.7
75	2.4	11.0	9.5	0.86	0.64	13.2	86.0	3.8
75	2.7	11.0	9.5	0.86	0.63	13.1	84.7	4.7
75	3.0	11.1	9.6	0.86	0.62	13.2	83.8	5.7
75	3.2	11.1	9.6	0.86	0.61	13.2	83.3	6.4
75	3.3	11.1	9.6	0.86	0.61	13.2	83.0	6.8
75	3.6	11.1	9.6	0.86	0.61	13.2	82.3	7.9
86	2.0	10.6	9.2	0.87	0.75	13.2	99.2	2.5
86	2.4	10.7	9.3	0.87	0.73	13.2	97.0	3.6
86	2.7	10.7	9.3	0.87	0.72	13.2	95.8	4.5
86	3.0	10.8	9.4	0.87	0.71	13.2	94.8	5.4
86	3.2	10.8	9.4	0.87	0.71	13.2	94.3	6.1
86	3.3	10.8	9.4	0.87	0.71	13.2	94.0	6.4
86	3.6	10.8	9.4	0.87	0.70	13.2	93.3	7.5
95	2.0	10.4	9.1	0.87	0.85	13.3	108.3	2.5
95	2.4	10.5	9.2	0.88	0.83	13.3	106.1	3.4
95	2.7	10.5	9.2	0.88	0.82	13.3	104.9	4.3
95	3.0	10.6	9.3	0.88	0.81	13.4	103.9	5.2
95	3.2	10.6	9.3	0.88	0.80	13.3	103.3	5.9
95	3.3	10.6	9.3	0.88	0.80	13.3	103.1	6.2
95	3.6	10.6	9.3	0.88	0.80	13.3	102.4	7.2
105	2.0	10.2	9.0	0.88	0.96	13.5	118.5	2.4
105	2.4	10.2	9.0	0.88	0.94	13.4	116.2	3.3
105	2.7	10.3	9.1	0.88	0.93	13.5	115.0	4.2
105	3.0	10.3	9.1	0.88	0.92	13.4	113.9	5.1
105	3.2	10.4	9.2	0.88	0.91	13.5	113.4	5.7
105	3.3	10.4	9.2	0.88	0.91	13.5	113.2	6.0
105	3.6	10.3	9.1	0.88	0.91	13.4	112.4	7.0
115	2.0	9.8	8.8	0.90	1.08	13.5	128.5	2.3
115	2.4	9.8	8.8	0.90	1.06	13.4	126.2	3.3
115	2.7	9.9	8.9	0.90	1.05	13.5	125.0	4.1
115	3.0	9.9	8.9	0.90	1.04	13.4	123.9	4.9
115	3.2	10.0	9.0	0.90	1.03	13.5	123.4	5.5
115	3.3	10.0	9.0	0.90	1.03	13.5	123.2	5.9
115	3.6	9.9	8.9	0.90	1.02	13.4	122.4	6.8

Note: Cooling performance data is tabulated at 80.6°F DB/66.2°F WB entering air at ANSI/AHRI/ASHRAE/ISO13256-1 rated cfm. For conditions other than what is tabulated, multipliers must be used to correct performance. See performance correction tables for fan correction factors for CFM other than rated and the cooling correction factors for variations in entering air temperature. Rated GPM 3; Minimum CFM 304; Rated CFM 380; Maximum CFM 456.

Table 43. Heating capacities 1 ton (gross) - GEVG012

EWT	GPM	Htg Cap Mbtuh	Absorb Mbtuh	Comp Pwr kW	LWT	Feet Head
25	2.0	7.5	5.3	0.64	19.7	4.1
25	2.4	7.6	5.4	0.65	20.5	5.8
25	2.7	7.7	5.5	0.65	20.9	7.3
25	3.0	7.8	5.6	0.65	21.3	8.9
25	3.2	7.8	5.6	0.65	21.5	10.0
25	3.3	7.8	5.6	0.65	21.6	10.6
25	3.6	7.9	5.7	0.65	21.8	12.3
32	2.0	8.4	6.1	0.66	25.9	3.8
32	2.4	8.6	6.3	0.67	26.8	5.4
32	2.7	8.7	6.4	0.67	27.3	6.7
32	3.0	8.8	6.5	0.67	27.7	8.1
32	3.2	8.8	6.5	0.67	27.9	9.1
32	3.3	8.8	6.5	0.67	28.1	9.6
32	3.6	8.9	6.6	0.67	28.3	11.2
45	2.0	10.6	8.2	0.71	36.8	3.4
45	2.4	10.8	8.4	0.71	38.0	4.7
45	2.7	10.9	8.5	0.72	38.7	5.8
45	3.0	11.0	8.6	0.72	39.3	7.1
45	3.2	11.1	8.7	0.72	39.6	7.9
45	3.3	11.1	8.7	0.72	39.7	8.4
45	3.6	11.2	8.8	0.72	40.1	9.7
55	2.0	12.2	9.7	0.74	45.3	3.1
55	2.4	12.5	10.0	0.74	46.7	4.3
55	2.7	12.7	10.2	0.75	47.4	5.3
55	3.0	12.8	10.2	0.75	48.2	6.5
55	3.2	12.9	10.3	0.75	48.6	7.3
55	3.3	12.9	10.3	0.75	48.8	7.7
55	3.6	13.0	10.4	0.75	49.2	9.0
68	2.0	14.3	11.7	0.77	56.3	2.8
68	2.4	14.7	12.0	0.78	58.0	3.9
68	2.7	14.9	12.2	0.78	59.0	4.9
68	3.0	15.0	12.3	0.78	59.8	5.9
68	3.2	15.1	12.4	0.78	60.3	6.7
68	3.3	15.1	12.4	0.78	60.5	7.1
68	3.6	15.3	12.6	0.78	61.0	8.2
75	2.0	15.4	12.7	0.79	62.3	2.7
75	2.4	15.8	13.1	0.79	64.1	3.8
75	2.7	16.0	13.3	0.79	65.1	4.7
75	3.0	16.2	13.5	0.80	66.0	5.7
75	3.2	16.3	13.6	0.80	66.5	6.4
75	3.3	16.3	13.6	0.80	66.8	6.8

Table 43. Heating capacities 1 ton (gross) - GEVG012 (continued)

EWT	GPM	Htg Cap Mbtuh	Absorb Mbtuh	Comp Pwr kW	LWT	Feet Head
75	3.6	16.4	13.7	0.80	67.4	7.9
86	2.0	17.0	14.2	0.81	71.8	2.5
86	2.4	17.4	14.6	0.81	73.8	3.6
86	2.7	17.7	14.9	0.81	75.0	4.5
86	3.0	17.9	15.1	0.82	75.9	5.4
86	3.2	18.0	15.2	0.82	76.5	6.1
86	3.3	18.0	15.2	0.82	76.8	6.4
86	3.6	18.2	15.4	0.82	77.4	7.5

Note: Heating performance data is tabulated at 68°F DB entering air at ANSI/AHRI/ASHRAE/ISO13256-1 rated cfm. For ANSI/AHRI/ASHRAE/ISO13256-1 certified ratings, refer to the ANSI/AHRI/ASHRAE/ISO13256-1 WLHP, GWHP and GLHP performance table. See performance correction tables to correct performance at conditions other than those tabulated. Data shown is for unit performance only. Interpolation of data is permissible; extrapolation is not. Rated GPM: 2.8 Minimum cfm 304; Rated cfm 380; Maximum cfm 456.

Table 44. Fan correction factors 1 ton - GEV012

Entering cfm	Cooling Capacity	Sensible Capacity	Cooling Input Watts	Heating Capacity	Heating Input Watts
304	0.958	0.867	1.010	0.975	1.097
323	0.968	0.900	1.008	0.982	1.069
342	0.979	0.933	1.005	0.989	1.044
361	0.990	0.967	1.002	0.995	1.021
380	1.000	1.000	1.000	1.000	1.000
418	1.017	1.066	0.996	1.009	0.964
437	1.025	1.098	0.994	1.013	0.948
456	1.032	1.131	0.991	1.017	0.933

Table 45. Correction factors for variation in entering air temperature 1 ton, GEVG012

Cooling Entering Air WB°F	Cooling Capacity	Cooling Input Watts	Sensible vs. Entering Dry Bulb Multipliers					Heating Entering Air DB°F	Heating Capacity	Heating Input Watts
			65.6	70.6	75.6	80.6	85.6			
49.4	0.912	1.012	0.951	1.027	1.085	*	*	53.0	1.049	0.833
56.3	0.917	1.014	0.811	0.965	1.077	*	*	58.0	1.033	0.888
60.3	0.927	1.012	0.646	0.855	1.010	1.130	*	63.0	1.017	0.944
63.2	0.961	1.008	0.489	0.741	0.931	1.077	*	68.0	1.000	1.000
66.2	1.000	1.000	–	0.593	0.823	1.000	1.141	73.0	0.982	1.058
72.1	1.104	0.975	–	–	0.532	0.778	0.973	78.0	0.964	1.116
77.1	1.198	0.944	–	–	–	–	0.768	83.0	0.946	1.176

Note: * = Sensible equals total capacity

Cooling and Heating Capacities 1.25 tons

Table 46. Cooling capacities 1.25 tons (net) - GEHE015

EWT	GPM	Total Mbtuh	Sen Mbtuh	SHR	Power kW	EER	Reject Mbtuh	LWT	Feet Head
45	2.2	15.5	11.7	0.76	0.71	21.8	17.9	61.3	2.5
45	2.8	15.6	11.8	0.76	0.68	23.1	17.9	57.8	3.8
45	3.1	15.6	11.8	0.75	0.66	23.6	17.9	56.5	4.6
45	3.5	15.6	11.8	0.75	0.65	24.2	17.9	55.2	5.7

Table 46. Cooling capacities 1.25 tons (net) - GEHE015 (continued)

EWT	GPM	Total Mbtuh	Sen Mbtuh	SHR	Power kW	EER	Reject Mbtuh	LWT	Feet Head
45	3.6	15.7	11.8	0.75	0.64	24.3	17.9	54.9	6.0
45	3.8	15.7	11.8	0.75	0.64	24.5	17.8	54.4	6.6
45	4.2	15.7	11.8	0.75	0.63	25.0	17.8	53.5	7.9
55	2.2	15.2	11.6	0.76	0.83	18.4	18.0	71.4	2.4
55	2.8	15.3	11.7	0.76	0.79	19.4	18.0	67.9	3.7
55	3.1	15.3	11.7	0.76	0.78	19.7	18.0	66.6	4.4
55	3.5	15.4	11.7	0.76	0.76	20.1	18.0	65.3	5.5
55	3.6	15.4	11.7	0.76	0.76	20.2	18.0	65.0	5.8
55	3.8	15.4	11.7	0.76	0.75	20.4	17.9	64.4	6.3
55	4.2	15.4	11.7	0.76	0.75	20.6	17.9	63.5	7.6
68	2.2	14.7	11.5	0.78	0.97	15.2	18.1	84.4	2.3
68	2.8	14.8	11.5	0.78	0.94	15.8	18.0	80.9	3.5
68	3.1	14.9	11.5	0.77	0.92	16.1	18.0	79.6	4.2
68	3.5	14.9	11.5	0.77	0.91	16.3	18.0	78.3	5.2
68	3.6	14.9	11.5	0.77	0.91	16.4	18.0	78.0	5.5
68	3.8	14.9	11.5	0.77	0.90	16.5	18.0	77.5	6.0
68	4.2	14.9	11.5	0.77	0.89	16.7	18.0	76.6	7.2
77	2.2	14.4	11.3	0.79	1.08	13.4	18.1	93.4	2.2
77	2.8	14.4	11.4	0.79	1.04	13.9	18.0	89.9	3.4
77	3.1	14.5	11.4	0.79	1.03	14.0	18.0	88.6	4.1
77	3.5	14.5	11.4	0.78	1.02	14.2	18.0	87.3	5.1
77	3.6	14.5	11.4	0.78	1.01	14.3	18.0	87.0	5.3
77	3.8	14.5	11.4	0.78	1.01	14.4	18.0	86.4	5.9
77	4.2	14.5	11.4	0.78	1.00	14.5	17.9	85.5	7.0
86	2.2	14.0	11.2	0.80	1.19	11.7	18.0	102.4	2.2
86	2.8	14.0	11.2	0.80	1.15	12.2	18.0	98.8	3.3
86	3.1	14.0	11.2	0.80	1.14	12.3	17.9	97.6	4.0
86	3.5	14.1	11.2	0.80	1.13	12.5	17.9	96.2	4.9
86	3.6	14.1	11.2	0.80	1.12	12.5	17.9	95.9	5.2
86	3.8	14.1	11.2	0.80	1.12	12.6	17.9	95.4	5.7
86	4.2	14.1	11.2	0.80	1.11	12.7	17.9	94.5	6.8
95	2.2	13.6	11.0	0.81	1.31	10.3	18.0	111.4	2.1
95	2.8	13.6	11.0	0.81	1.28	10.7	18.0	107.8	3.2
95	3.1	13.6	11.0	0.81	1.26	10.8	17.9	106.6	3.9
95	3.5	13.6	11.0	0.81	1.25	10.9	17.9	105.2	4.8
95	3.6	13.6	11.0	0.81	1.25	10.9	17.9	104.9	5.0
95	3.8	13.6	11.0	0.81	1.24	11.0	17.9	104.4	5.5
95	4.2	13.6	11.0	0.81	1.23	11.1	17.8	103.5	6.6
105	2.2	13.1	10.8	0.83	1.47	8.9	18.1	121.5	2.1
105	2.8	13.1	10.8	0.83	1.43	9.2	18.0	117.8	3.1
105	3.1	13.1	10.8	0.83	1.42	9.3	17.9	116.6	3.8

Table 46. Cooling capacities 1.25 tons (net) - GEHE015 (continued)

EWT	GPM	Total Mbtuh	Sen Mbtuh	SHR	Power kW	EER	Reject Mbtuh	LWT	Feet Head
105	3.5	13.1	10.8	0.83	1.40	9.4	17.9	115.2	4.7
105	3.6	13.1	10.8	0.83	1.40	9.4	17.9	114.9	4.9
105	3.8	13.1	10.8	0.83	1.39	9.4	17.9	114.4	5.4
105	4.2	13.1	10.8	0.83	1.38	9.5	17.8	113.5	6.4
110	2.2	12.8	10.7	0.84	1.57	8.2	18.2	126.5	2.0
110	2.8	12.8	10.7	0.84	1.52	8.4	18.0	122.9	3.1
110	3.1	12.8	10.7	0.84	1.51	8.5	18.0	121.6	3.7
110	3.5	12.8	10.7	0.84	1.49	8.6	17.9	120.2	4.6
110	3.6	12.8	10.7	0.84	1.49	8.6	17.9	120.0	4.8
110	3.8	12.8	10.7	0.84	1.48	8.7	17.9	119.4	5.3
110	4.2	12.8	10.7	0.84	1.47	8.7	17.9	118.5	6.3

Note: Cooling performance data is tabulated at 80.6°F DB/66.2°F WB entering air at ANSI/AHRI/ASHRAE/ISO13256-1 rated cfm. For ANSI/AHRI/ASHRAE/ISO13256-1 certified ratings, refer to the ANSI/AHRI/ASHRAE/ISO13256-1 WLHP, GWHP and GLHP performance table. See performance correction tables to correct performance at conditions other than those tabulated. Data shown is for unit performance only. Interpolation of data is permissible; extrapolation is not. Rated GPM: 3.5 Minimum cfm 380; Rated cfm 475; Maximum cfm 570.

Table 47. Heating capacities 1.25 tons (net) - GEHE015

EWT	GPM	Htg Cap Mbtuh	Absorb Mbtuh	Power kW	COP	LWT	Feet Head
25	2.2	10.7	7.0	1.07	2.9	18.6	3.9
25	2.8	10.9	7.3	1.07	3.0	19.8	5.9
25	3.1	11.0	7.3	1.07	3.0	20.3	7.1
25	3.5	11.1	7.4	1.08	3.0	20.7	8.7
25	3.6	11.1	7.5	1.08	3.0	20.9	9.2
25	3.8	11.2	7.5	1.08	3.0	21.1	10.1
25	4.2	11.3	7.6	1.08	3.1	21.4	12.0
32	2.2	11.7	8.0	1.09	3.1	24.7	3.8
32	2.8	12.0	8.3	1.10	3.2	26.1	5.7
32	3.1	12.1	8.3	1.10	3.2	26.6	6.9
32	3.5	12.2	8.5	1.10	3.3	27.2	8.5
32	3.6	12.2	8.5	1.10	3.3	27.3	8.9
32	3.8	12.3	8.5	1.10	3.3	27.5	9.8
32	4.2	12.4	8.6	1.10	3.3	27.9	11.6
45	2.2	13.9	10.0	1.14	3.6	35.9	3.0
45	2.8	14.3	10.4	1.14	3.7	37.6	4.6
45	3.1	14.4	10.5	1.15	3.7	38.2	5.5
45	3.5	14.6	10.6	1.15	3.7	38.9	6.8
45	3.6	14.6	10.6	1.15	3.7	39.1	7.2
45	3.8	14.6	10.7	1.15	3.7	39.4	7.9
45	4.2	14.7	10.8	1.15	3.7	39.9	9.4
55	2.2	15.6	11.6	1.17	3.9	44.4	2.9
55	2.8	16.1	12.0	1.18	4.0	46.4	4.4
55	3.1	16.2	12.2	1.19	4.0	47.1	5.3
55	3.5	16.4	12.3	1.19	4.0	47.9	6.6

Table 47. Heating capacities 1.25 tons (net) - GEHE015 (continued)

EWT	GPM	Htg Cap Mbtuh	Absorb Mbtuh	Power kW	COP	LWT	Feet Head
55	3.6	16.4	12.3	1.19	4.0	48.1	6.9
55	3.8	16.5	12.4	1.19	4.1	48.5	7.6
55	4.2	16.6	12.5	1.19	4.1	49.0	9.0
68	2.2	17.9	13.7	1.22	4.3	55.5	2.8
68	2.8	18.4	14.2	1.23	4.4	57.8	4.2
68	3.1	18.6	14.4	1.23	4.4	58.7	5.1
68	3.5	18.8	14.6	1.24	4.5	59.6	6.2
68	3.6	18.9	14.7	1.24	4.5	59.9	6.6
68	3.8	19.0	14.8	1.24	4.5	60.2	7.2
68	4.2	19.1	14.9	1.24	4.5	60.9	8.6
75	2.2	19.2	14.9	1.24	4.5	61.4	2.7
75	2.8	19.7	15.4	1.25	4.6	64.0	4.1
75	3.1	19.9	15.7	1.25	4.7	64.9	4.9
75	3.5	20.2	15.9	1.26	4.7	65.9	6.1
75	3.6	20.2	15.9	1.26	4.7	66.2	6.4
75	3.8	20.3	16.0	1.26	4.7	66.6	7.0
75	4.2	20.5	16.2	1.26	4.8	67.3	8.4
86	2.2	21.1	16.8	1.27	4.9	70.8	2.6
86	2.8	21.7	17.4	1.28	5.0	73.6	4.0
86	3.1	21.9	17.6	1.28	5.0	74.7	4.8
86	3.5	22.2	17.8	1.29	5.1	75.8	5.9
86	3.6	22.2	17.8	1.28	5.1	76.1	6.2
86	3.8	22.3	18.0	1.29	5.1	76.5	6.8
86	4.2	22.5	18.1	1.29	5.1	77.4	8.1

Note: Heating performance data is tabulated at 68°F DB entering air at ANSI/AHRI/ASHRAE/ISO13256-1 rated cfm. For ANSI/AHRI/ASHRAE/ISO13256-1 certified ratings, refer to the ANSI/AHRI/ASHRAE/ISO13256-1 WLHP, GWHP and GLHP performance table. See performance correction tables to correct performance at conditions other than those tabulated. Data shown is for unit performance only. Interpolation of data is permissible; extrapolation is not. Rated GPM: 3.5 Minimum cfm 380; Rated cfm 475; Maximum cfm 570.

Table 48. Fan correction factors 1.25 tons - GEHE015

Entering cfm	Cooling Capacity	Sensible Capacity	Cooling Input Watts	Heating Capacity	Heating Input Watts
380	0.960	0.878	1.005	0.993	1.100
404	0.970	0.907	1.004	0.991	1.067
428	0.981	0.939	1.002	0.998	1.045
451	0.991	0.969	1.001	0.996	1.017
475	1.000	1.000	1.000	1.000	1.000
523	1.017	1.059	0.998	1.000	0.963
546	1.024	1.088	0.997	1.000	0.948
570	1.031	1.117	0.996	1.002	0.932

Table 49. Correction factors for variation in entering air temperature 1.25 tons, GEHE015

Cooling Entering Air WB°F	Cooling Capacity	Cooling Input Watts	Sensible vs. Entering Dry Bulb Multipliers					Heating Entering Air DB°F	Heating Capacity	Heating Input Watts
			65.6	70.6	75.6	80.6	85.6			
49.4	0.944	1.010	0.990	1.054	1.118	*	*	53.0	1.012	0.842
56.3	0.943	1.012	0.810	1.036	1.117	*	*	58.0	1.006	0.891
60.3	0.943	1.012	0.598	0.839	1.074	*	*	63.0	1.002	0.943
63.2	0.965	1.008	0.439	0.683	0.923	1.156	*	68.0	1.000	1.000
66.2	1.000	1.000	–	0.517	0.759	1.000	1.227	73.0	0.993	1.054
72.1	1.081	0.978	–	–	0.428	0.671	0.911	78.0	0.989	1.110
77.1	1.147	0.950	–	–	–	0.384	0.625	83.0	0.986	1.168

Note: * = Sensible equals total capacity

Table 50. Cooling capacities 1.25 tons (gross) - GEVG015

EWT	GPM	Total Mbtuh	Sen Mbtuh	SHR	Comp Pwr kW	Reject Mbtuh	LWT	Feet Head
45	2.4	18.7	14.1	0.75	0.59	20.7	62.3	5.5
45	3.0	18.7	14.1	0.75	0.56	20.6	58.7	8.0
45	3.4	18.8	14.2	0.76	0.54	20.6	57.1	9.8
45	3.8	18.8	14.2	0.76	0.53	20.6	56.0	11.6
45	3.9	18.8	14.2	0.76	0.53	20.6	55.6	12.4
45	4.1	18.8	14.2	0.76	0.52	20.6	55.0	13.5
45	4.5	18.8	14.2	0.76	0.51	20.5	54.1	16.0
55	2.4	18.1	13.8	0.76	0.71	20.5	72.1	5.0
55	3.0	18.2	13.9	0.76	0.68	20.5	68.7	7.2
55	3.4	18.2	13.9	0.76	0.67	20.5	67.1	8.9
55	3.8	18.3	14.0	0.77	0.65	20.5	65.9	10.5
55	3.9	18.3	14.0	0.77	0.65	20.5	65.5	11.2
55	4.1	18.3	14.0	0.77	0.64	20.5	65.0	12.2
55	4.5	18.3	14.0	0.77	0.64	20.5	64.1	14.4
68	2.4	17.3	13.5	0.78	0.85	20.2	84.8	4.5
68	3.0	17.4	13.6	0.78	0.82	20.2	81.5	6.5
68	3.4	17.5	13.7	0.78	0.80	20.2	79.9	8.0
68	3.8	17.5	13.7	0.78	0.79	20.2	78.8	9.5
68	3.9	17.5	13.7	0.78	0.79	20.2	78.4	10.1
68	4.1	17.5	13.7	0.78	0.78	20.2	77.9	11.0
68	4.5	17.5	13.7	0.78	0.78	20.1	76.9	13.0
75	2.4	16.9	13.4	0.79	0.91	20.0	91.7	4.3
75	3.0	17.0	13.4	0.79	0.88	20.0	88.3	6.2
75	3.4	17.0	13.4	0.79	0.86	19.9	86.7	7.7
75	3.8	17.0	13.4	0.79	0.85	19.9	85.6	9.1
75	3.9	17.0	13.4	0.79	0.85	19.9	85.2	9.7
75	4.1	17.1	13.5	0.79	0.84	20.0	84.8	10.6
75	4.5	17.1	13.5	0.79	0.83	19.9	83.8	12.5
86	2.4	16.2	13.1	0.81	1.03	19.7	102.4	4.1

Table 50. Cooling capacities 1.25 tons (gross) - GEVG015 (continued)

EWT	GPM	Total Mbtuh	Sen Mbtuh	SHR	Comp Pwr kW	Reject Mbtuh	LWT	Feet Head
86	3.0	16.2	13.1	0.81	0.99	19.6	99.1	5.9
86	3.4	16.3	13.2	0.81	0.98	19.6	97.5	7.3
86	3.8	16.3	13.2	0.81	0.97	19.6	96.5	8.6
86	3.9	16.3	13.2	0.81	0.96	19.6	96.1	9.2
86	4.1	16.3	13.2	0.81	0.96	19.6	95.6	10.0
86	4.5	16.3	13.2	0.81	0.95	19.5	94.7	11.9
95	2.4	15.5	12.8	0.83	1.15	19.4	111.2	3.9
95	3.0	15.6	12.9	0.83	1.12	19.4	107.9	5.7
95	3.4	15.6	12.9	0.83	1.10	19.4	106.4	7.1
95	3.8	15.7	12.9	0.82	1.09	19.4	105.3	8.3
95	3.9	15.7	12.9	0.82	1.09	19.4	104.9	8.9
95	4.1	15.7	12.9	0.82	1.08	19.4	104.5	9.7
95	4.5	15.7	12.9	0.82	1.07	19.4	103.6	11.5
105	2.4	14.8	12.5	0.84	1.32	19.3	121.1	3.8
105	3.0	14.9	12.6	0.85	1.28	19.3	117.9	5.6
105	3.4	14.9	12.6	0.85	1.27	19.2	116.3	6.9
105	3.8	14.9	12.6	0.85	1.26	19.2	115.2	8.1
105	3.9	14.9	12.6	0.85	1.25	19.2	114.8	8.7
105	4.1	14.9	12.6	0.85	1.25	19.2	114.4	9.5
105	4.5	14.9	12.6	0.85	1.24	19.1	113.5	11.2
115	2.4	14.1	12.2	0.87	1.49	19.2	131.0	3.7
115	3.0	14.1	12.2	0.87	1.45	19.1	127.7	5.5
115	3.4	14.1	12.2	0.87	1.44	19.0	126.2	6.8
115	3.8	14.1	12.2	0.87	1.43	19.0	125.1	8.0
115	3.9	14.1	12.2	0.87	1.42	19.0	124.7	8.5
115	4.1	14.1	12.2	0.87	1.42	18.9	124.2	9.3
115	4.5	14.2	12.3	0.87	1.41	19.0	123.4	10.9

Note: Cooling performance data is tabulated at 80.6°F DB/66.2°F WB entering air at ANSI/AHRI/ASHRAE/ISO13256-1 rated cfm. For conditions other than what is tabulated, multipliers must be used to correct performance. See performance correction tables for fan correction factors for CFM other than rated and the cooling correction factors for variations in entering air temperature. Rated GPM 3.75; Minimum CFM 380; Rated CFM 475; Maximum CFM 570.

Table 51. Heating capacities 1.25 tons (gross) - GEVG015

EWT	GPM	Htg Cap Mbtuh	Absorb Mbtuh	Comp Pwr kW	LWT	Feet Head
25	2.4	10.0	8.0	0.59	18.3	7.3
25	3.0	10.2	8.3	0.56	19.5	10.8
25	3.4	10.3	8.5	0.54	20.0	13.4
25	3.8	10.4	8.6	0.53	20.4	15.8
25	3.9	10.4	8.6	0.53	20.6	16.9
25	4.1	10.4	8.6	0.52	20.8	18.5
25	4.5	10.5	8.8	0.51	21.1	21.8
32	2.4	11.2	8.9	0.68	24.6	6.5
32	3.0	11.4	9.2	0.64	25.9	9.5

Table 51. Heating capacities 1.25 tons (gross) - GEVG015 (continued)

EWT	GPM	Htg Cap Mbtuh	Absorb Mbtuh	Comp Pwr kW	LWT	Feet Head
32	3.4	11.5	9.4	0.63	26.5	11.7
32	3.8	11.6	9.5	0.62	26.9	13.9
32	3.9	11.6	9.5	0.61	27.1	14.9
32	4.1	11.7	9.6	0.61	27.3	16.2
32	4.5	11.7	9.7	0.60	27.7	19.1
45	2.4	13.5	10.7	0.83	36.1	5.5
45	3.0	13.8	11.1	0.79	37.6	8.0
45	3.4	13.9	11.2	0.78	38.4	9.8
45	3.8	14.0	11.4	0.77	38.9	11.6
45	3.9	14.1	11.5	0.76	39.1	12.4
45	4.1	14.1	11.5	0.76	39.4	13.5
45	4.5	14.2	11.6	0.75	39.8	16.0
55	2.4	15.3	12.2	0.92	44.8	5.0
55	3.0	15.7	12.7	0.88	46.5	7.2
55	3.4	15.9	12.9	0.87	47.4	8.9
55	3.8	16.0	13.1	0.86	48.0	10.5
55	3.9	16.0	13.1	0.85	48.3	11.2
55	4.1	16.1	13.2	0.85	48.6	12.2
55	4.5	16.2	13.3	0.84	49.1	14.4
68	2.4	17.8	14.3	1.03	56.1	4.5
68	3.0	18.3	14.9	0.99	58.1	6.5
68	3.4	18.5	15.2	0.98	59.1	8.0
68	3.8	18.6	15.3	0.97	59.8	9.5
68	3.9	18.7	15.4	0.96	60.1	10.1
68	4.1	18.8	15.5	0.96	60.4	11.0
68	4.5	18.9	15.7	0.95	61.0	13.0
75	2.4	19.2	15.5	1.09	62.1	4.3
75	3.0	19.7	16.1	1.06	64.3	6.2
75	3.4	19.9	16.4	1.04	65.4	7.7
75	3.8	20.1	16.6	1.03	66.1	9.1
75	3.9	20.2	16.7	1.02	66.4	9.7
75	4.1	20.3	16.8	1.02	66.8	10.6
75	4.5	20.4	17.0	1.01	67.4	12.5
86	2.4	21.4	17.4	1.16	71.5	4.1
86	3.0	22.0	18.2	1.13	73.9	5.9
86	3.4	22.3	18.5	1.11	75.1	7.3
86	3.8	22.5	18.7	1.10	76.0	8.6
86	3.9	22.6	18.9	1.10	76.3	9.2
86	4.1	22.7	19.0	1.09	76.7	10.0

Table 51. Heating capacities 1.25 tons (gross) - GEVG015 (continued)

EWT	GPM	Htg Cap Mbtuh	Absorb Mbtuh	Comp Pwr kW	LWT	Feet Head
86	4.5	22.9	19.2	1.08	77.5	11.9

Note: Heating performance data is tabulated at 68°F DB entering air at ANSI/AHRI/ASHRAE/ISO13256-1 rated cfm. For ANSI/AHRI/ASHRAE/ISO13256-1 certified ratings, refer to the ANSI/AHRI/ASHRAE/ISO13256-1 WLHP, GWHP and GLHP performance table. See performance correction tables to correct performance at conditions other than those tabulated. Data shown is for unit performance only. Interpolation of data is permissible; extrapolation is not. Rated GPM: 3.5 Minimum cfm 380; Rated cfm 475; Maximum cfm 570.

Table 52. Fan correction factors 1.25 tons - GEVG015

Entering cfm	Cooling Capacity	Sensible Capacity	Cooling Input Watts	Heating Capacity	Heating Input Watts
380	0.957	0.848	1.011	0.986	1.103
404	0.969	0.886	1.008	0.990	1.073
428	0.980	0.926	1.005	0.994	1.046
451	0.990	0.963	1.003	0.997	1.022
475	1.000	1.000	1.000	1.000	1.000
523	1.017	1.063	0.995	1.005	0.962
546	1.024	1.091	0.993	1.007	0.946
570	1.032	1.122	0.991	1.008	0.931

Table 53. Correction factors for variation in entering air temperature 1.25 tons, GEVG015

Cooling Entering Air WB°F	Cooling Capacity	Cooling Input Watts	Sensible vs. Entering Dry Bulb Multipliers					Heating Entering Air DB°F	Heating Capacity	Heating Input Watts
			65.6	70.6	75.6	80.6	85.6			
49.4	0.897	1.017	0.956	1.042	1.108	*	*	53.0	1.028	0.818
56.3	0.897	1.019	0.812	0.962	1.077	*	*	58.0	1.019	0.879
60.3	0.917	1.016	0.662	0.857	1.008	1.127	*	63.0	1.010	0.939
63.2	0.958	1.010	0.521	0.752	0.932	1.075	*	68.0	1.000	1.000
66.2	1.000	1.000	–	0.618	0.831	1.000	1.137	73.0	0.989	1.062
72.1	1.112	0.971	–	–	0.563	0.791	0.976	78.0	0.978	1.125
77.1	1.207	0.939	–	–	–	–	0.782	83.0	0.967	1.188

Note: * = Sensible equals total capacity

Cooling and Heating Capacities 1.5 tons

Table 54. Cooling capacities 1.5 tons (net) - GEHE018

EWT	GPM	Total Mbtuh	Sen Mbtuh	SHR	Power kW	EER	Reject Mbtuh	LWT	Feet Head
45	2.7	18.8	14.4	0.77	0.93	20.2	22.0	61.3	3.4
45	3.3	18.8	14.4	0.77	0.90	20.9	21.9	58.3	4.8
45	3.7	18.8	14.4	0.76	0.89	21.3	21.9	56.8	5.9
45	4.2	18.8	14.4	0.76	0.87	21.7	21.8	55.4	7.4
45	4.4	18.8	14.3	0.76	0.86	21.8	21.8	54.9	8.1
45	4.6	18.8	14.4	0.76	0.86	21.9	21.8	54.5	8.7
45	5.0	18.8	14.3	0.76	0.85	22.1	21.7	53.7	10.1
55	2.7	18.7	14.3	0.77	1.05	17.8	22.3	71.5	3.3
55	3.3	18.7	14.3	0.77	1.02	18.4	22.2	68.4	4.6
55	3.7	18.7	14.4	0.77	1.00	18.7	22.1	67.0	5.7
55	4.2	18.7	14.3	0.77	0.99	19.0	22.1	65.5	7.1

Table 54. Cooling capacities 1.5 tons (net) - GEHE018 (continued)

EWT	GPM	Total Mbtuh	Sen Mbtuh	SHR	Power kW	EER	Reject Mbtuh	LWT	Feet Head
55	4.4	18.7	14.4	0.77	0.98	19.1	22.1	65.0	7.7
55	4.6	18.8	14.4	0.76	0.98	19.2	22.1	64.6	8.4
55	5.0	18.8	14.4	0.76	0.97	19.4	22.1	63.8	9.7
68	2.7	18.3	14.2	0.77	1.23	15.0	22.5	84.7	3.1
68	3.3	18.4	14.2	0.77	1.19	15.5	22.5	81.6	4.4
68	3.7	18.4	14.2	0.77	1.17	15.7	22.4	80.1	5.4
68	4.2	18.5	14.3	0.77	1.16	16.0	22.4	78.7	6.8
68	4.4	18.5	14.3	0.77	1.15	16.0	22.4	78.2	7.4
68	4.6	18.5	14.3	0.77	1.15	16.1	22.4	77.7	8.0
68	5.0	18.5	14.3	0.77	1.14	16.3	22.4	77.0	9.3
77	2.7	17.9	14.1	0.78	1.35	13.3	22.6	93.7	3.0
77	3.3	18.0	14.1	0.78	1.32	13.7	22.5	90.6	4.3
77	3.7	18.1	14.1	0.78	1.30	13.9	22.5	89.2	5.3
77	4.2	18.1	14.1	0.78	1.28	14.1	22.5	87.7	6.6
77	4.4	18.1	14.1	0.78	1.28	14.2	22.5	87.2	7.2
77	4.6	18.1	14.1	0.78	1.27	14.3	22.4	86.8	7.7
77	5.0	18.1	14.1	0.78	1.26	14.4	22.4	86.0	9.0
86	2.7	17.4	13.8	0.79	1.50	11.6	22.5	102.7	2.9
86	3.3	17.5	13.9	0.79	1.45	12.0	22.5	99.6	4.2
86	3.7	17.6	13.9	0.79	1.44	12.2	22.5	98.1	5.1
86	4.2	17.6	13.9	0.79	1.42	12.4	22.4	96.7	6.4
86	4.4	17.6	13.9	0.79	1.41	12.5	22.4	96.2	7.0
86	4.6	17.6	13.9	0.79	1.41	12.5	22.4	95.7	7.5
86	5.0	17.6	13.9	0.79	1.40	12.6	22.4	95.0	8.7
95	2.7	16.9	13.6	0.81	1.65	10.2	22.5	111.7	2.9
95	3.3	16.9	13.6	0.81	1.61	10.5	22.4	108.6	4.1
95	3.7	17.0	13.7	0.81	1.59	10.6	22.4	107.1	5.0
95	4.2	17.0	13.7	0.81	1.57	10.8	22.4	105.6	6.2
95	4.4	17.0	13.7	0.80	1.57	10.9	22.4	105.2	6.8
95	4.6	17.0	13.7	0.80	1.56	10.9	22.3	104.7	7.3
95	5.0	17.0	13.7	0.80	1.55	11.0	22.3	103.9	8.5
105	2.7	16.2	13.3	0.82	1.86	8.7	22.5	121.7	2.8
105	3.3	16.2	13.3	0.82	1.82	8.9	22.4	118.6	4.0
105	3.7	16.2	13.3	0.82	1.80	9.0	22.4	117.1	4.9
105	4.2	16.3	13.3	0.82	1.77	9.2	22.3	115.6	6.1
105	4.4	16.3	13.3	0.82	1.77	9.2	22.3	115.1	6.6
105	4.6	16.3	13.3	0.82	1.76	9.2	22.3	114.7	7.1
105	5.0	16.3	13.3	0.82	1.75	9.3	22.2	113.9	8.3
110	2.7	15.8	13.2	0.83	2.00	7.9	22.6	126.8	2.7
110	3.3	15.8	13.2	0.83	1.95	8.1	22.5	123.6	3.9
110	3.7	15.8	13.2	0.83	1.92	8.2	22.4	122.1	4.8

Table 54. Cooling capacities 1.5 tons (net) - GEHE018 (continued)

EWT	GPM	Total Mbtuh	Sen Mbtuh	SHR	Power kW	EER	Reject Mbtuh	LWT	Feet Head
110	4.2	15.9	13.2	0.83	1.90	8.4	22.3	120.6	6.0
110	4.4	15.9	13.2	0.83	1.89	8.4	22.3	120.2	6.5
110	4.6	15.9	13.2	0.83	1.88	8.4	22.3	119.7	7.0
110	5.0	15.9	13.2	0.83	1.87	8.5	22.3	118.9	8.1

Note: Cooling performance data is tabulated at 80.6°F DB/66.2°F WB entering air at ANSI/AHRI/ASHRAE/ISO13256-1 rated cfm. For ANSI/AHRI/ASHRAE/ISO13256-1 certified ratings, refer to the ANSI/AHRI/ASHRAE/ISO13256-1 WLHP, GWHP and GLHP performance table. See performance correction tables to correct performance at conditions other than those tabulated. Data shown is for unit performance only. Interpolation of data is permissible; extrapolation is not. Rated GPM: 4.2 Minimum cfm 456; Rated cfm 570; Maximum cfm 684.

Table 55. Heating capacities 1.5 tons (net) - GEHE018

EWT	GPM	Htg Cap Mbtuh	Absorb Mbtuh	Power kW	COP	LWT	Feet Head
25	2.7	12.6	8.4	1.24	3.0	18.8	4.9
25	3.3	12.8	8.6	1.24	3.0	19.8	7.0
25	3.7	13.0	8.7	1.25	3.1	20.3	8.5
25	4.2	13.1	8.8	1.25	3.1	20.8	10.6
25	4.4	13.1	8.9	1.25	3.1	21.0	11.5
25	4.6	13.2	8.9	1.25	3.1	21.1	12.4
25	5.0	13.3	9.0	1.25	3.1	21.4	14.4
32	2.7	13.8	9.5	1.26	3.2	25.0	4.8
32	3.3	14.1	9.8	1.27	3.3	26.1	6.8
32	3.7	14.2	9.9	1.27	3.3	26.6	8.3
32	4.2	14.4	10.0	1.27	3.3	27.2	10.3
32	4.4	14.5	10.1	1.28	3.3	27.4	11.2
32	4.6	14.5	10.2	1.28	3.3	27.6	12.1
32	5.0	14.6	10.3	1.28	3.3	27.9	14.0
45	2.7	16.6	12.1	1.32	3.7	36.0	3.9
45	3.3	17.0	12.5	1.33	3.8	37.4	5.5
45	3.7	17.2	12.7	1.33	3.8	38.1	6.7
45	4.2	17.4	12.9	1.34	3.8	38.9	8.3
45	4.4	17.5	12.9	1.34	3.8	39.1	9.0
45	4.6	17.6	13.0	1.34	3.8	39.4	9.7
45	5.0	17.7	13.1	1.34	3.9	39.8	11.2
55	2.7	18.8	14.2	1.37	4.0	44.5	3.7
55	3.3	19.3	14.6	1.38	4.1	46.1	5.2
55	3.7	19.5	14.8	1.38	4.1	47.0	6.4
55	4.2	19.7	15.0	1.38	4.2	47.9	8.0
55	4.4	19.8	15.1	1.38	4.2	48.1	8.6
55	4.6	19.9	15.1	1.39	4.2	48.4	9.3
55	5.0	20.0	15.3	1.39	4.2	48.9	10.8
68	2.7	21.7	16.8	1.42	4.5	55.5	3.5
68	3.3	22.1	17.3	1.42	4.6	57.5	5.0
68	3.7	22.4	17.5	1.43	4.6	58.5	6.1
68	4.2	22.6	17.7	1.43	4.6	59.6	7.6

Table 55. Heating capacities 1.5 tons (net) - GEHE018 (continued)

EWT	GPM	Htg Cap Mbtuh	Absorb Mbtuh	Power kW	COP	LWT	Feet Head
68	4.4	22.7	17.8	1.43	4.6	59.9	8.2
68	4.6	22.8	17.9	1.44	4.7	60.2	8.9
68	5.0	22.9	18.0	1.43	4.7	60.8	10.3
75	2.7	23.1	18.2	1.43	4.7	61.5	3.5
75	3.3	23.6	18.7	1.44	4.8	63.7	4.9
75	3.7	23.8	18.9	1.44	4.8	64.8	6.0
75	4.2	24.1	19.1	1.44	4.9	65.9	7.4
75	4.4	24.2	19.2	1.45	4.9	66.3	8.0
75	4.6	24.2	19.3	1.45	4.9	66.6	8.7
75	5.0	24.4	19.5	1.45	4.9	67.2	10.0
86	2.7	25.1	20.1	1.45	5.1	71.1	3.3
86	3.3	25.5	20.6	1.45	5.2	73.5	4.7
86	3.7	25.8	20.8	1.45	5.2	74.7	5.8
86	4.2	26.0	21.1	1.45	5.3	76.0	7.2
86	4.4	26.1	21.2	1.45	5.3	76.4	7.8
86	4.6	26.2	21.3	1.45	5.3	76.7	8.4
86	5.0	26.3	21.3	1.44	5.3	77.5	9.7

Note: Heating performance data is tabulated at 68°F DB entering air at ANSI/AHRI/ASHRAE/ISO13256-1 rated cfm. For ANSI/AHRI/ASHRAE/ISO13256-1 certified ratings, refer to the ANSI/AHRI/ASHRAE/ISO13256-1 WLHP, GWHP and GLHP performance table. See performance correction tables to correct performance at conditions other than those tabulated. Data shown is for unit performance only. Interpolation of data is permissible; extrapolation is not. Rated GPM: 4.2 Minimum cfm 456; Rated cfm 570; Maximum cfm 684.

Table 56. Fan correction factors 1.5 tons - GEHE018

Entering cfm	Cooling Capacity	Sensible Capacity	Cooling Input Watts	Heating Capacity	Heating Input Watts
456	0.963	0.880	1.003	0.983	1.089
485	0.973	0.909	1.002	0.991	1.063
513	0.983	0.940	1.001	0.995	1.039
542	0.993	0.971	1.001	0.995	1.017
570	1.000	1.000	1.000	1.000	1.000
627	1.014	1.060	1.000	1.001	0.964
656	1.021	1.086	1.000	1.004	0.951
684	1.026	1.113	1.000	1.006	0.939

Table 57. Correction factors for variation in entering air temperature 1.5 tons, GEHE018

Cooling Entering Air WB°F	Cooling Capacity	Cooling Input Watts	Sensible vs. Entering Dry Bulb Multipliers					Heating Entering Air DB°F	Heating Capacity	Heating Input Watts
			65.6	70.6	75.6	80.6	85.6			
49.4	0.930	1.022	0.975	1.045	1.116	*	*	53.0	1.018	0.855
56.3	0.929	1.022	0.803	1.011	1.114	*	*	58.0	1.015	0.902
60.3	0.929	1.022	0.608	0.840	1.055	*	*	63.0	1.005	0.948
63.2	0.950	1.026	0.457	0.692	0.923	1.136	*	68.0	1.000	1.000
66.2	1.000	1.000	–	0.533	0.769	1.000	1.209	73.0	0.992	1.049
72.1	1.066	0.967	–	–	0.446	0.681	0.912	78.0	0.979	1.100
77.1	1.114	0.940	–	–	–	0.402	0.633	83.0	0.973	1.155

Note: * = Sensible equals total capacity

Table 58. Cooling capacities 1.5 tons (gross) - GEVG018

EWT	GPM	Total Mbtuh	Sen Mbtuh	SHR	Comp Pwr kW	Reject Mbtuh	LWT	Feet Head
45	2.9	21.5	15.6	0.73	0.86	24.4	61.8	6.9
45	3.6	21.6	15.7	0.73	0.81	24.4	58.6	10.3
45	4.1	21.6	15.7	0.73	0.78	24.3	56.9	13.1
45	4.5	21.6	15.7	0.73	0.77	24.2	55.8	15.5
45	4.7	21.6	15.7	0.73	0.76	24.2	55.3	16.7
45	5.0	21.7	15.8	0.73	0.75	24.3	54.7	18.6
45	5.4	21.7	15.8	0.73	0.74	24.2	54.0	21.4
55	2.9	20.9	15.2	0.73	1.06	24.5	71.9	6.3
55	3.6	21.0	15.3	0.73	1.01	24.4	68.6	9.3
55	4.1	21.0	15.3	0.73	0.98	24.4	66.9	11.9
55	4.5	21.0	15.3	0.73	0.97	24.3	65.8	14.0
55	4.7	21.1	15.4	0.73	0.96	24.4	65.4	15.2
55	5.0	21.1	15.4	0.73	0.95	24.3	64.7	17.0
55	5.4	21.1	15.4	0.73	0.94	24.3	64.0	19.4
68	2.9	20.1	15.0	0.75	1.28	24.5	84.9	5.9
68	3.6	20.1	15.0	0.75	1.23	24.3	81.5	8.6
68	4.1	20.2	15.1	0.75	1.20	24.3	79.9	10.8
68	4.5	20.2	15.1	0.75	1.19	24.3	78.8	12.8
68	4.7	20.2	15.1	0.75	1.18	24.2	78.3	13.8
68	5.0	20.2	15.1	0.75	1.17	24.2	77.7	15.4
68	5.4	20.2	15.1	0.75	1.16	24.2	77.0	17.6
75	2.9	19.6	14.9	0.76	1.38	24.3	91.8	5.8
75	3.6	19.6	14.9	0.76	1.33	24.1	88.4	8.3
75	4.1	19.7	15.0	0.76	1.30	24.1	86.8	10.5
75	4.5	19.7	15.0	0.76	1.29	24.1	85.7	12.3
75	4.7	19.7	15.0	0.76	1.28	24.1	85.3	13.3
75	5.0	19.7	15.0	0.76	1.27	24.0	84.6	14.8
75	5.4	19.7	15.0	0.76	1.26	24.0	83.9	17.0
86	2.9	18.8	14.8	0.79	1.56	24.1	102.6	5.7
86	3.6	18.8	14.8	0.79	1.51	24.0	99.3	8.1
86	4.1	18.9	14.9	0.79	1.49	24.0	97.7	10.1
86	4.5	18.9	14.9	0.79	1.47	23.9	96.6	11.8
86	4.7	18.9	14.9	0.79	1.46	23.9	96.2	12.7
86	5.0	18.9	14.9	0.79	1.45	23.9	95.6	14.2
86	5.4	18.9	14.9	0.79	1.44	23.8	94.8	16.2
95	2.9	18.0	14.5	0.81	1.75	24.0	111.6	5.6
95	3.6	18.1	14.6	0.81	1.70	23.9	108.3	7.9
95	4.1	18.1	14.6	0.81	1.67	23.8	106.6	9.9
95	4.5	18.1	14.6	0.81	1.66	23.8	105.6	11.5
95	4.7	18.1	14.6	0.81	1.65	23.7	105.1	12.4
95	5.0	18.2	14.7	0.81	1.64	23.8	104.5	13.8

Table 58. Cooling capacities 1.5 tons (gross) - GEVG018 (continued)

EWT	GPM	Total Mbtuh	Sen Mbtuh	SHR	Comp Pwr kW	Reject Mbtuh	LWT	Feet Head
95	5.4	18.2	14.7	0.81	1.63	23.8	103.8	15.7
105	2.9	17.2	14.1	0.82	1.99	24.0	121.6	5.4
105	3.6	17.2	14.1	0.82	1.94	23.8	118.2	7.7
105	4.1	17.3	14.2	0.82	1.91	23.8	116.6	9.6
105	4.5	17.3	14.2	0.82	1.90	23.8	115.6	11.3
105	4.7	17.3	14.2	0.82	1.89	23.8	115.1	12.1
105	5.0	17.3	14.2	0.82	1.88	23.7	114.5	13.5
105	5.4	17.3	14.2	0.82	1.87	23.7	113.8	15.3
115	2.9	16.3	13.7	0.84	2.24	24.0	131.6	5.1
115	3.6	16.3	13.7	0.84	2.19	23.8	128.2	7.4
115	4.1	16.3	13.7	0.84	2.17	23.7	126.6	9.3
115	4.5	16.4	13.7	0.84	2.15	23.7	125.5	11.0
115	4.7	16.4	13.7	0.84	2.15	23.7	125.1	11.8
115	5.0	16.4	13.7	0.84	2.14	23.7	124.5	13.2
115	5.4	16.4	13.7	0.84	2.13	23.7	123.8	15.0

Note: Cooling performance data is tabulated at 80.6°F DB/66.2°F WB entering air at ANSI/AHRI/ASHRAE/ISO13256-1 rated cfm. For conditions other than what is tabulated, multipliers must be used to correct performance. See performance correction tables for fan correction factors for CFM other than rated and the cooling correction factors for variations in entering air temperature. Rated GPM 4.5; Minimum CFM 456; Rated CFM 570; Maximum CFM 684.

Table 59. Heating capacities 1.5 tons (gross) - GEVG018

EWT	GPM	Htg Cap Mbtuh	Absorb Mbtuh	Comp Pwr kW	LWT	Feet Head
25	2.9	11.5	6.8	1.38	20.3	9.3
25	3.6	11.9	7.2	1.38	21.0	13.5
25	4.1	12.0	7.3	1.39	21.4	16.9
25	4.5	12.2	7.5	1.39	21.7	19.8
25	4.7	12.2	7.4	1.39	21.9	21.4
25	5.0	12.3	7.5	1.39	22.0	23.7
25	5.4	12.4	7.6	1.40	22.2	27.0
32	2.9	12.5	7.7	1.41	26.7	8.2
32	3.6	12.8	8.0	1.42	27.6	12.2
32	4.1	13.0	8.2	1.42	28.0	15.3
32	4.5	13.1	8.2	1.43	28.4	18.0
32	4.7	13.2	8.3	1.43	28.5	19.5
32	5.0	13.3	8.4	1.43	28.6	21.7
32	5.4	13.4	8.5	1.43	28.9	24.7
45	2.9	16.4	11.3	1.50	37.2	6.9
45	3.6	16.7	11.6	1.51	38.6	10.3
45	4.1	16.9	11.7	1.51	39.3	13.1
45	4.5	17.0	11.8	1.52	39.8	15.5
45	4.7	17.1	11.9	1.52	39.9	16.7
45	5.0	17.2	12.0	1.52	40.2	18.6
45	5.4	17.3	12.1	1.52	40.5	21.4

Table 59. Heating capacities 1.5 tons (gross) - GEVG018 (continued)

EWT	GPM	Htg Cap Mbtuh	Absorb Mbtuh	Comp Pwr kW	LWT	Feet Head
55	2.9	18.7	13.3	1.57	45.8	6.3
55	3.6	19.0	13.6	1.57	47.4	9.3
55	4.1	19.2	13.8	1.58	48.3	11.9
55	4.5	19.3	13.9	1.58	48.8	14.0
55	4.7	19.4	14.0	1.58	49.0	15.2
55	5.0	19.5	14.1	1.58	49.4	17.0
55	5.4	19.6	14.2	1.59	49.7	19.4
68	2.9	21.7	16.1	1.65	56.9	5.9
68	3.6	22.0	16.4	1.65	58.9	8.6
68	4.1	22.2	16.5	1.66	60.0	10.8
68	4.5	22.4	16.7	1.66	60.6	12.8
68	4.7	22.4	16.7	1.67	60.9	13.8
68	5.0	22.5	16.8	1.67	61.3	15.4
68	5.4	22.6	16.9	1.67	61.7	17.6
75	2.9	23.5	17.7	1.69	62.8	5.8
75	3.6	23.8	18.0	1.70	65.0	8.3
75	4.1	24.0	18.2	1.70	66.1	10.5
75	4.5	24.1	18.3	1.71	66.9	12.3
75	4.7	24.2	18.4	1.71	67.2	13.3
75	5.0	24.3	18.5	1.71	67.6	14.8
75	5.4	24.4	18.6	1.71	68.1	17.0
86	2.9	26.1	20.2	1.74	72.1	5.7
86	3.6	26.4	20.4	1.75	74.7	8.1
86	4.1	26.6	20.6	1.75	76.0	10.1
86	4.5	26.8	20.8	1.76	76.8	11.8
86	4.7	26.8	20.8	1.76	77.1	12.7
86	5.0	26.9	20.9	1.76	77.6	14.2
86	5.4	27.0	21.0	1.76	78.2	16.2

Note: Heating performance data is tabulated at 68.0°F DB at the ANSI/AHRI/ASHRAE/ISO13256-1 rated cfm. For conditions other than what is tabulated, multipliers must be used to correct performance. See performance correction tables for fan correction factors for CFM other than rated and the heating correction factors for variation in entering air temperatures. Rated GPM 4.5;Minimum CFM 456; Rated CFM 570; Maximum CFM 684.

Table 60. Fan correction factors 1.5 tons - GEVG018

Entering cfm	Cooling Capacity	Sensible Capacity	Cooling Input Watts	Heating Capacity	Heating Input Watts
456	0.960	0.888	1.008	0.987	1.102
485	0.971	0.918	1.006	0.991	1.071
513	0.982	0.946	1.004	0.994	1.045
542	0.991	0.974	1.002	0.997	1.021
570	1.000	1.000	1.000	1.000	1.000
627	1.015	1.052	0.997	1.004	0.963
656	1.022	1.078	0.995	1.006	0.946
684	1.028	1.103	0.994	1.008	0.931

Table 61. Correction factors for variation in entering air temperature 1.5 tons, GEVG018

Cooling Entering Air WB°F	Cooling Capacity	Cooling Input Watts	Sensible vs. Entering Dry Bulb Multipliers					Heating Entering Air DB°F	Heating Capacity	Heating Input Watts
			65.6	70.6	75.6	80.6	85.6			
49.4	0.888	1.014	0.955	1.044	1.115	*	*	53.0	1.025	0.823
56.3	0.887	1.016	0.815	0.964	1.081	*	*	58.0	1.018	0.882
60.3	0.901	1.013	0.672	0.861	1.013	1.136	*	63.0	1.009	0.940
63.2	0.947	1.008	0.537	0.757	0.935	1.080	1.202	68.0	1.000	1.000
66.2	1.000	1.000	–	0.626	0.831	1.000	1.142	73.0	0.988	1.060
72.1	1.110	0.976	–	–	0.566	0.783	0.967	78.0	0.977	1.122
77.1	1.209	0.949	–	–	–	–	0.769	83.0	0.979	1.187

Note: * = Sensible equals total capacity

Cooling and Heating Capacities 2 tons

Table 62. Cooling capacities 2 tons (net) - GEHE024

EWT	GPM	Total Mbtuh	Sen Mbtuh	SHR	Power kW	Reject Mbtuh	LWT	Feet Head
45	3.6	27.1	18.9	0.70	1.23	31.3	62.2	6.2
45	4.5	27.2	19.0	0.70	1.18	31.3	59.0	8.8
45	5.0	27.4	19.1	0.70	1.16	31.3	57.4	10.7
45	5.6	27.4	19.1	0.70	1.14	31.3	56.2	12.8
45	5.9	27.4	19.1	0.70	1.13	31.3	55.7	14.0
45	6.2	27.5	19.1	0.70	1.13	31.3	55.2	15.2
45	6.7	27.5	19.2	0.70	1.11	31.3	54.3	17.7
55	3.6	26.2	18.5	0.70	1.39	30.9	72.0	5.9
55	4.5	26.4	18.6	0.70	1.35	31.0	68.8	8.3
55	5.0	26.4	18.6	0.70	1.32	31.0	67.3	10.2
55	5.6	26.5	18.7	0.70	1.31	31.0	66.1	12.2
55	5.9	26.5	18.7	0.70	1.30	31.0	65.5	13.3
55	6.2	26.5	18.7	0.70	1.29	31.0	65.1	14.5
55	6.7	26.6	18.8	0.70	1.28	31.0	64.2	16.9
68	3.6	24.8	18.1	0.73	1.59	30.3	84.6	5.5
68	4.5	25.0	18.3	0.73	1.54	30.3	81.5	7.8
68	5.0	25.1	18.3	0.73	1.52	30.3	80.0	9.6
68	5.6	25.2	18.4	0.73	1.50	30.3	78.8	11.5
68	5.9	25.2	18.4	0.73	1.50	30.3	78.3	12.5
68	6.2	25.2	18.4	0.73	1.49	30.3	77.8	13.6
68	6.7	25.3	18.5	0.73	1.48	30.3	77.0	15.9
75	3.6	24.2	17.9	0.74	1.72	30.1	91.5	5.3
75	4.5	24.4	18.0	0.74	1.67	30.1	88.4	7.6
75	5.0	24.5	18.1	0.74	1.65	30.1	86.9	9.3
75	5.6	24.5	18.1	0.74	1.63	30.1	85.8	11.1
75	5.9	24.6	18.2	0.74	1.62	30.1	85.2	12.1
75	6.2	24.6	18.2	0.74	1.62	30.1	84.8	13.2
75	6.7	24.6	18.2	0.74	1.60	30.1	84.0	15.4

Table 62. Cooling capacities 2 tons (net) - GEHE024 (continued)

EWT	GPM	Total Mbtuh	Sen Mbtuh	SHR	Power kW	Reject Mbtuh	LWT	Feet Head
86	3.6	23.0	17.4	0.76	1.93	29.6	102.3	5.2
86	4.5	23.2	17.5	0.76	1.88	29.6	99.2	7.3
86	5.0	23.2	17.6	0.76	1.86	29.6	97.7	8.9
86	5.6	23.3	17.6	0.76	1.84	29.6	96.6	10.7
86	5.9	23.3	17.7	0.76	1.83	29.6	96.1	11.6
86	6.2	23.4	17.7	0.76	1.82	29.6	95.6	12.6
86	6.7	23.4	17.7	0.76	1.81	29.6	94.8	14.7
95	3.6	22.0	17.1	0.77	2.14	29.4	111.1	5.3
95	4.5	22.2	17.2	0.77	2.09	29.3	108.1	7.3
95	5.0	22.3	17.3	0.77	2.06	29.3	106.6	8.8
95	5.6	22.4	17.3	0.77	2.04	29.4	105.5	10.5
95	5.9	22.4	17.3	0.77	2.03	29.3	105.0	11.4
95	6.2	22.4	17.3	0.77	2.02	29.3	104.5	12.3
95	6.7	22.5	17.4	0.77	2.01	29.3	103.7	14.3
105	3.6	20.9	16.6	0.80	2.39	29.0	121.0	5.5
105	4.5	21.1	16.8	0.80	2.33	29.0	118.0	7.4
105	5.0	21.2	16.9	0.80	2.30	29.0	116.5	8.8
105	5.6	21.2	16.9	0.80	2.28	29.0	115.4	10.4
105	5.9	21.2	16.9	0.80	2.27	29.0	114.9	11.3
105	6.2	21.3	17.0	0.80	2.27	29.0	114.4	12.2
105	6.7	21.3	17.0	0.80	2.25	29.0	113.6	14.1
110	3.6	20.3	16.4	0.81	2.52	28.9	125.9	5.8
110	4.5	20.4	16.6	0.81	2.47	28.9	122.9	7.6
110	5.0	20.5	16.7	0.81	2.44	28.8	121.4	8.9
110	5.6	20.6	16.7	0.81	2.42	28.8	120.3	10.5
110	5.9	20.6	16.7	0.81	2.41	28.8	119.8	11.3
110	6.2	20.6	16.7	0.81	2.40	28.8	119.4	12.2
110	6.7	20.7	16.8	0.81	2.38	28.8	118.6	14.0

Note: Cooling performance data is tabulated at 80.6°F DB/66.2°F WB entering air at ANSI/AHRI/ASHRAE/ISO13256-1 rated cfm. For ANSI/AHRI/ASHRAE/ISO13256-1 certified ratings, refer to the ANSI/AHRI/ASHRAE/ISO13256-1 WLHP, GWHP and GLHP performance table. See performance correction tables to correct performance at conditions other than those tabulated. Data shown is for unit performance only. Interpolation of data is permissible; extrapolation is not. Rated GPM: 5.6 Minimum cfm 608; Rated cfm 760; Maximum cfm 912.

Table 63. Heating capacities 2 tons (net) - GEHE024

EWT	GPM	Htg Cap Mbtuh	Absorb Mbtuh	Power kW	LWT	Feet Head
25	3.6	17.9	11.7	1.83	18.6	6.8
25	4.5	18.2	12.0	1.83	19.7	9.6
25	5.0	18.4	12.1	1.83	20.2	11.7
25	5.6	18.5	12.2	1.83	20.6	13.9
25	5.9	18.5	12.3	1.83	20.8	15.2
25	6.2	18.6	12.3	1.83	21.0	16.4
25	6.7	18.7	12.4	1.83	21.3	19.1
32	3.6	19.6	13.4	1.84	24.7	6.6

Table 63. Heating capacities 2 tons (net) - GEHE024 (continued)

EWT	GPM	Htg Cap Mbtuh	Absorb Mbtuh	Power kW	LWT	Feet Head
32	4.5	20.0	13.7	1.84	25.9	9.3
32	5.0	20.2	13.9	1.84	26.5	11.4
32	5.6	20.3	14.0	1.84	27.0	13.6
32	5.9	20.4	14.1	1.84	27.2	14.8
32	6.2	20.4	14.1	1.84	27.4	16.0
32	6.7	20.5	14.2	1.84	27.8	18.6
45	3.6	23.2	16.9	1.87	35.7	6.2
45	4.5	23.6	17.2	1.87	37.3	8.8
45	5.0	23.9	17.5	1.88	38.1	10.7
45	5.6	24.0	17.6	1.88	38.7	12.8
45	5.9	24.1	17.7	1.88	39.0	14.0
45	6.2	24.1	17.7	1.87	39.3	15.2
45	6.7	24.2	17.8	1.88	39.7	17.7
55	3.6	26.1	19.5	1.91	44.3	5.9
55	4.5	26.5	20.0	1.91	46.1	8.3
55	5.0	26.8	20.2	1.92	47.0	10.2
55	5.6	26.9	20.4	1.92	47.7	12.2
55	5.9	27.0	20.5	1.92	48.0	13.3
55	6.2	27.1	20.5	1.92	48.3	14.5
55	6.7	27.2	20.7	1.93	48.9	16.9
68	3.6	29.2	22.4	1.99	55.7	5.5
68	4.5	29.9	23.0	2.00	57.7	7.8
68	5.0	30.2	23.3	2.01	58.7	9.6
68	5.6	30.6	23.7	2.02	59.5	11.5
68	5.9	30.6	23.7	2.02	59.9	12.5
68	6.2	30.7	23.8	2.02	60.3	13.6
68	6.7	30.8	23.9	2.02	60.9	15.9
75	3.6	31.3	24.4	2.04	61.6	5.3
75	4.5	32.1	25.0	2.07	63.8	7.6
75	5.0	32.4	25.3	2.08	64.9	9.3
75	5.6	32.7	25.6	2.09	65.9	11.1
75	5.9	32.9	25.7	2.09	66.3	12.1
75	6.2	33.0	25.8	2.10	66.6	13.2
75	6.7	33.2	26.0	2.10	67.3	15.4
86	3.6	34.9	27.5	2.17	70.9	5.2
86	4.5	35.8	28.2	2.21	73.4	7.3
86	5.0	36.2	28.6	2.23	74.7	8.9
86	5.6	36.5	28.9	2.25	75.7	10.7
86	5.9	36.7	29.0	2.25	76.1	11.6
86	6.2	36.8	29.1	2.26	76.6	12.6

Table 63. Heating capacities 2 tons (net) - GEHE024 (continued)

EWT	GPM	Htg Cap Mbtuh	Absorb Mbtuh	Power kW	LWT	Feet Head
86	6.7	37.1	29.3	2.27	77.3	14.7

Note: Heating performance data is tabulated at 68°F DB entering air at ANSI/AHRI/ASHRAE/ISO13256-1 rated cfm. For ANSI/AHRI/ASHRAE/ISO13256-1 certified ratings, refer to the ANSI/AHRI/ASHRAE/ISO13256-1 WLHP, GWHP and GLHP performance table. See performance correction tables to correct performance at conditions other than those tabulated. Data shown is for unit performance only. Interpolation of data is permissible; extrapolation is not. Rated GPM: 5.6 Minimum cfm 608; Rated cfm 760; Maximum cfm 912.

Table 64. Fan correction factors 2 tons - GEHE024

Entering cfm	Cooling Capacity	Sensible Capacity	Cooling Input Watts	Heating Capacity	Heating Input Watts
608	0.958	0.879	1.001	0.985	1.080
646	0.970	0.911	1.001	0.989	1.056
684	0.981	0.940	1.000	0.990	1.033
722	0.991	0.971	1.000	0.998	1.017
760	1.000	1.000	1.000	1.000	1.000
836	1.019	1.062	1.001	1.002	0.967
874	1.027	1.092	1.001	1.004	0.954
912	1.034	1.122	1.001	1.010	0.945

Table 65. Correction factors for variation in entering air temperature 2 tons, GEHE024

Cooling Entering Air WB°F	Cooling Capacity	Cooling Input Watts	Sensible vs. Entering Dry Bulb Multipliers					Heating Entering Air DB°F	Heating Capacity	Heating Input Watts
			65.6	70.6	75.6	80.6	85.6			
49.4	0.925	1.007	1.020	1.088	1.156	*	*	53.0	1.023	0.857
56.3	0.926	1.008	0.811	1.040	1.158	*	*	58.0	1.015	0.904
60.3	0.930	1.007	0.607	0.841	1.073	*	*	63.0	1.005	0.948
63.2	0.965	1.004	0.451	0.690	0.924	1.159	*	68.0	1.000	1.000
66.2	1.000	1.000	—	0.526	0.765	1.000	1.236	73.0	0.989	1.047
72.1	1.082	0.999	—	—	0.430	0.676	0.916	78.0	0.980	1.099
77.1	1.153	1.008	—	—	—	0.383	0.630	83.0	0.972	1.152

Note: * = Sensible equals total capacity

Table 66. Cooling capacities 2 tons (gross) - GEVG024

EWT	GPM	Total Mbtuh	Sen Mbtuh	SHR	Power kW	Reject Mbtuh	LWT	Feet Head
45	3.9	28.4	22.3	0.79	0.95	31.6	61.2	3.5
45	4.8	28.4	22.3	0.79	0.93	31.6	58.2	5.0
45	5.4	28.4	22.3	0.79	0.93	31.6	56.7	6.2
45	6.0	28.4	22.3	0.79	0.92	31.5	55.5	7.4
45	6.3	28.4	22.3	0.79	0.92	31.5	55.0	8.0
45	6.6	28.4	22.3	0.79	0.92	31.5	54.5	8.6
45	7.2	28.4	22.3	0.79	0.92	31.5	53.8	10.0
55	3.9	27.8	21.8	0.78	1.03	31.3	71.1	3.2
55	4.8	27.8	21.8	0.78	1.01	31.2	68.0	4.6
55	5.4	27.8	21.8	0.78	1.00	31.2	66.6	5.6
55	6.0	27.8	21.8	0.78	0.99	31.2	65.4	6.7
55	6.3	27.8	21.8	0.78	0.98	31.2	64.9	7.3
55	6.6	27.8	21.8	0.78	0.98	31.1	64.4	7.9

Table 66. Cooling capacities 2 tons (gross) - GEVG024 (continued)

EWT	GPM	Total Mbtuh	Sen Mbtuh	SHR	Power kW	Reject Mbtuh	LWT	Feet Head
55	7.2	27.9	21.9	0.78	0.98	31.2	63.7	9.2
68	3.9	26.7	21.1	0.79	1.20	30.8	83.8	2.9
68	4.8	26.8	21.2	0.79	1.16	30.8	80.8	4.2
68	5.4	26.8	21.2	0.79	1.15	30.7	79.4	5.1
68	6.0	26.8	21.2	0.79	1.13	30.7	78.2	6.2
68	6.3	26.8	21.2	0.79	1.13	30.6	77.7	6.7
68	6.6	26.9	21.3	0.79	1.12	30.7	77.3	7.3
68	7.2	26.9	21.3	0.79	1.12	30.7	76.5	8.4
75	3.9	26.0	20.8	0.80	1.31	30.5	90.6	2.8
75	4.8	26.1	20.9	0.80	1.27	30.4	87.7	4.0
75	5.4	26.1	20.9	0.80	1.25	30.4	86.3	4.9
75	6.0	26.2	20.9	0.80	1.24	30.4	85.1	5.9
75	6.3	26.2	20.9	0.80	1.23	30.4	84.7	6.5
75	6.6	26.2	20.9	0.80	1.23	30.4	84.2	7.0
75	7.2	26.2	20.9	0.80	1.22	30.3	83.4	8.2
86	3.9	24.8	20.1	0.81	1.51	29.9	101.3	2.7
86	4.8	24.9	20.2	0.81	1.46	29.9	98.5	3.8
86	5.4	25.0	20.3	0.81	1.44	29.9	97.1	4.7
86	6.0	25.0	20.3	0.81	1.43	29.9	96.0	5.6
86	6.3	25.0	20.3	0.81	1.42	29.8	95.5	6.1
86	6.6	25.0	20.3	0.81	1.42	29.8	95.0	6.7
86	7.2	25.1	20.4	0.81	1.41	29.9	94.3	7.8
95	3.9	23.7	19.6	0.83	1.69	29.5	110.1	2.6
95	4.8	23.8	19.6	0.82	1.65	29.4	107.3	3.7
95	5.4	23.9	19.7	0.82	1.62	29.4	105.9	4.5
95	6.0	23.9	19.7	0.82	1.61	29.4	104.8	5.4
95	6.3	23.9	19.7	0.82	1.60	29.4	104.3	5.9
95	6.6	24.0	19.8	0.83	1.59	29.4	103.9	6.4
95	7.2	24.0	19.8	0.83	1.58	29.4	103.2	7.5
105	3.9	22.4	18.8	0.84	1.91	28.9	119.8	2.5
105	4.8	22.5	18.9	0.84	1.86	28.9	117.0	3.5
105	5.4	22.5	18.9	0.84	1.84	28.8	115.7	4.4
105	6.0	22.6	19.0	0.84	1.83	28.8	114.6	5.3
105	6.3	22.6	19.0	0.84	1.82	28.8	114.1	5.7
105	6.6	22.6	19.0	0.84	1.81	28.8	113.7	6.2
105	7.2	22.7	19.1	0.84	1.80	28.8	113.0	7.3
115	3.9	20.9	18.0	0.86	2.14	28.2	129.5	2.4
115	4.8	21.0	18.1	0.86	2.10	28.2	126.8	3.4
115	5.4	21.1	18.2	0.86	2.08	28.2	125.4	4.2
115	6.0	21.1	18.2	0.86	2.06	28.1	124.4	5.1
115	6.3	21.1	18.2	0.86	2.05	28.1	123.9	5.6

Table 66. Cooling capacities 2 tons (gross) - GEVG024 (continued)

EWT	GPM	Total Mbtuh	Sen Mbtuh	SHR	Power kW	Reject Mbtuh	LWT	Feet Head
115	6.6	21.2	18.3	0.86	2.05	28.2	123.5	6.1
115	7.2	21.2	18.3	0.86	2.04	28.1	122.8	7.1

Note: Cooling performance data is tabulated at 80.6°F DB/66.2°F WB entering air at ANSI/AHRI/ASHRAE/ISO13256- rated cfm. For ANSI/AHRI/ASHRAE/ISO13256-1 certified ratings, refer to the ANSI/AHRI/ASHRAE/ISO13256-1 WLHP, GWHP and GLHP performance table. See performance correction tables to correct performance at conditions other than those tabulated. Data shown is for unit performance only. Interpolation of data is permissible; extrapolation is not. Rated GPM: 5.6 Minimum cfm 608; Rated cfm 760; Maximum cfm 912.

Table 67. Heating capacities 2 tons (gross) - GEVG024

EWT	GPM	Htg Cap Mbtuh	Absorb Mbtuh	Power kW	LWT	Feet Head
25	3.9	15.3	10.5	1.40	19.6	4.3
25	4.8	16.0	11.2	1.41	20.3	6.5
25	5.4	16.3	11.5	1.41	20.7	8.0
25	6.0	16.5	11.7	1.41	21.1	9.6
25	6.3	16.6	11.8	1.41	21.3	10.5
25	6.6	16.7	11.9	1.41	21.4	11.3
25	7.2	16.9	12.1	1.41	21.6	13.1
32	3.9	17.1	12.2	1.43	25.7	4.0
32	4.8	17.7	12.8	1.44	26.7	5.9
32	5.4	18.0	13.1	1.44	27.1	7.2
32	6.0	18.2	13.3	1.45	27.6	8.6
32	6.3	18.3	13.4	1.45	27.7	9.4
32	6.6	18.4	13.5	1.45	27.9	10.1
32	7.2	18.6	13.7	1.45	28.2	11.7
45	3.9	21.7	16.6	1.49	36.5	3.5
45	4.8	22.4	17.3	1.50	37.8	5.0
45	5.4	22.7	17.6	1.51	38.5	6.2
45	6.0	22.9	17.7	1.51	39.1	7.4
45	6.3	23.0	17.8	1.52	39.3	8.0
45	6.6	23.1	17.9	1.52	39.6	8.6
45	7.2	23.3	18.1	1.52	40.0	10.0
55	3.9	24.8	19.5	1.55	45.0	3.2
55	4.8	25.5	20.2	1.56	46.6	4.6
55	5.4	25.8	20.5	1.57	47.4	5.6
55	6.0	26.0	20.6	1.57	48.1	6.7
55	6.3	26.1	20.7	1.57	48.4	7.3
55	6.6	26.2	20.8	1.58	48.7	7.9
55	7.2	26.4	21.0	1.58	49.2	9.2
68	3.9	28.7	23.2	1.62	56.1	2.9
68	4.8	29.3	23.7	1.64	58.1	4.2
68	5.4	29.6	24.0	1.65	59.1	5.1
68	6.0	29.9	24.3	1.66	59.9	6.2
68	6.3	30.0	24.3	1.66	60.3	6.7
68	6.6	30.0	24.3	1.66	60.6	7.3

Table 67. Heating capacities 2 tons (gross) - GEVG024 (continued)

EWT	GPM	Htg Cap Mbtuh	Absorb Mbtuh	Power kW	LWT	Feet Head
68	7.2	30.2	24.5	1.67	61.2	8.4
75	3.9	31.0	25.3	1.67	62.0	2.8
75	4.8	31.6	25.8	1.69	64.3	4.0
75	5.4	31.9	26.1	1.70	65.3	4.9
75	6.0	32.2	26.4	1.71	66.2	5.9
75	6.3	32.2	26.4	1.71	66.6	6.5
75	6.6	32.3	26.5	1.71	67.0	7.0
75	7.2	32.5	26.6	1.72	67.6	8.2
86	3.9	34.4	28.4	1.76	71.4	2.7
86	4.8	35.0	28.9	1.78	74.0	3.8
86	5.4	35.3	29.2	1.80	75.2	4.7
86	6.0	35.6	29.4	1.80	76.2	5.6
86	6.3	35.7	29.5	1.81	76.6	6.1
86	6.6	35.7	29.5	1.81	77.1	6.7
86	7.2	36.0	29.8	1.82	77.7	7.8

Note: Heating performance data is tabulated at 68°F DB entering air at ANSI/AHRI/ASHRAE/ISO13256-1 rated cfm. For ANSI/AHRI/ASHRAE/ISO13256-1 certified ratings, refer to the ANSI/AHRI/ASHRAE/ISO13256-1 WLHP, GWHP and GLHP performance table. See performance correction tables to correct performance at conditions other than those tabulated. Data shown is for unit performance only. Interpolation of data is permissible; extrapolation is not. Rated GPM: 5.6 Minimum cfm 608; Rated cfm 760; Maximum cfm 912.

Table 68. Fan correction factors 2 tons - GEVG024

Entering cfm	Cooling Capacity	Sensible Capacity	Cooling Input Watts	Heating Capacity	Heating Input Watts
608	0.958	0.872	0.999	0.982	1.097
646	0.970	0.905	0.999	0.988	1.069
684	0.981	0.937	0.999	0.992	1.043
722	0.991	0.969	1.000	0.996	1.020
760	1.000	1.000	1.000	1.000	1.000
836	1.016	1.062	1.001	1.006	0.964
874	1.022	1.094	1.001	1.009	0.949
912	1.029	1.124	1.001	1.011	0.934

Table 69. Correction factors for variation in entering air temperature 2 tons, GEVG024

Cooling Entering Air WB°F	Cooling Capacity	Cooling Input Watts	Sensible vs. Entering Dry Bulb Multipliers					Heating Entering Air DB°F	Heating Capacity	Heating Input Watts
			65.6	70.6	75.6	80.6	85.6			
49.4	0.904	0.998	0.938	1.020	1.077	*	*	53.0	1.033	0.837
56.3	0.907	0.997	0.803	0.956	1.071	*	*	58.0	1.023	0.890
60.3	0.923	0.998	0.652	0.853	1.008	1.129	*	63.0	1.012	0.944
63.2	0.952	0.998	0.508	0.744	0.931	1.079	*	68.0	1.000	1.000
66.2	1.000	1.000	–	0.604	0.823	1.000	1.144	73.0	0.986	1.058
72.1	1.115	1.006	–	–	0.542	0.776	0.970	78.0	0.972	1.117
77.1	1.210	1.014	–	–	–	–	0.766	83.0	0.958	1.178

Note: * = Sensible equals total capacity

Cooling and Heating Capacities 2.5 tons

Table 70. Cooling capacities 2.5 tons (net) - GEHE030

EWT	GPM	Total Mbtuh	Sen Mbtuh	SHR	Power kW	Reject Mbtuh	LWT	Feet Head
45	4.6	33.1	23.8	0.72	1.40	37.9	61.6	6.8
45	5.6	33.4	24.0	0.72	1.35	38.0	58.6	10.0
45	6.3	33.5	24.1	0.72	1.33	38.0	57.1	12.3
45	7.0	33.6	24.2	0.72	1.31	38.1	55.9	14.9
45	7.4	33.7	24.2	0.72	1.30	38.1	55.4	16.2
45	7.7	33.7	24.2	0.72	1.29	38.1	54.9	17.6
45	8.4	33.8	24.3	0.72	1.28	38.2	54.1	20.4
55	4.6	32.0	23.4	0.73	1.59	37.4	71.4	6.6
55	5.6	32.2	23.5	0.73	1.54	37.5	68.4	9.6
55	6.3	32.4	23.6	0.73	1.51	37.5	66.9	11.9
55	7.0	32.5	23.7	0.73	1.49	37.5	65.7	14.3
55	7.4	32.5	23.7	0.73	1.48	37.6	65.2	15.6
55	7.7	32.5	23.7	0.73	1.48	37.6	64.8	16.9
55	8.4	32.6	23.8	0.73	1.46	37.6	64.0	19.7
68	4.6	30.8	22.4	0.73	1.88	37.2	84.3	6.4
68	5.6	31.0	22.5	0.73	1.83	37.2	81.3	9.3
68	6.3	31.1	22.6	0.73	1.81	37.2	79.8	11.4
68	7.0	31.1	22.6	0.73	1.79	37.2	78.6	13.8
68	7.4	31.2	22.7	0.73	1.78	37.2	78.1	15.0
68	7.7	31.2	22.7	0.73	1.77	37.2	77.7	16.3
68	8.4	31.2	22.7	0.73	1.76	37.2	76.9	18.9
75	4.6	29.9	22.0	0.74	2.04	36.9	91.2	6.2
75	5.6	30.1	22.2	0.74	1.98	36.9	88.2	9.1
75	6.3	30.2	22.2	0.74	1.96	36.8	86.7	11.1
75	7.0	30.2	22.3	0.74	1.93	36.8	85.5	13.4
75	7.4	30.3	22.3	0.74	1.93	36.8	85.0	14.6
75	7.7	30.3	22.3	0.74	1.92	36.9	84.6	15.9
75	8.4	30.3	22.3	0.74	1.90	36.8	83.8	18.5
86	4.6	28.3	21.9	0.77	2.23	35.9	101.8	5.9
86	5.6	28.5	22.0	0.77	2.17	35.9	98.8	8.7
86	6.3	28.6	22.1	0.77	2.15	35.9	97.4	10.7
86	7.0	28.7	22.1	0.77	2.12	35.9	96.3	12.8
86	7.4	28.7	22.2	0.77	2.11	35.9	95.8	14.0
86	7.7	28.7	22.2	0.77	2.11	35.9	95.3	15.2
86	8.4	28.8	22.2	0.77	2.09	35.9	94.5	17.7
95	4.6	27.2	21.4	0.79	2.47	35.6	110.6	5.7
95	5.6	27.3	21.6	0.79	2.41	35.6	107.7	8.2
95	6.3	27.4	21.6	0.79	2.38	35.6	106.3	10.1
95	7.0	27.5	21.7	0.79	2.36	35.5	105.2	12.2
95	7.4	27.5	21.7	0.79	2.35	35.5	104.7	13.3

Table 70. Cooling capacities 2.5 tons (net) - GEHE030 (continued)

EWT	GPM	Total Mbtuh	Sen Mbtuh	SHR	Power kW	Reject Mbtuh	LWT	Feet Head
95	7.7	27.5	21.7	0.79	2.34	35.5	104.2	14.5
95	8.4	27.6	21.7	0.79	2.32	35.5	103.5	16.8
105	4.6	25.7	20.9	0.81	2.77	35.2	120.5	5.5
105	5.6	25.9	21.0	0.81	2.70	35.1	117.5	8.0
105	6.3	26.0	21.1	0.81	2.67	35.1	116.1	9.9
105	7.0	26.1	21.2	0.81	2.64	35.1	115.0	11.9
105	7.4	26.1	21.2	0.81	2.63	35.1	114.5	12.9
105	7.7	26.1	21.2	0.81	2.62	35.0	114.1	14.1
105	8.4	26.2	21.2	0.81	2.61	35.1	113.3	16.4
110	4.6	24.9	20.6	0.83	2.94	35.0	125.4	5.5
110	5.6	25.1	20.7	0.83	2.87	34.9	122.5	7.9
110	6.3	25.2	20.8	0.83	2.83	34.9	121.1	9.7
110	7.0	25.3	20.9	0.83	2.81	34.9	120.0	11.7
110	7.4	25.3	20.9	0.83	2.80	34.8	119.5	12.8
110	7.7	25.3	20.9	0.83	2.79	34.9	119.1	13.9
110	8.4	25.4	20.9	0.83	2.77	34.8	118.3	16.2

Note: Cooling performance data is tabulated at 80.6°F DB/66.2°F WB entering air at ANSI/AHRI/ASHRAE/ISO13256-1 rated cfm. For ANSI/AHRI/ASHRAE/ISO13256-1 certified ratings, refer to the ANSI/AHRI/ASHRAE/ISO13256-1 WLHP, GWHP and GLHP performance table. See performance correction tables to correct performance at conditions other than those tabulated. Data shown is for unit performance only. Interpolation of data is permissible; extrapolation is not. Rated GPM: 7.0 Maximum cfm 720; Rated cfm 900; Maximum cfm 1080.

Table 71. Heating capacities 2.5 tons (net) - GEHE030

EWT	GPM	Htg Cap Mbtuh	Absorb Mbtuh	Power kW	LWT	Feet Head
25	4.6	20.7	13.9	2.00	18.9	7.5
25	5.6	20.9	14.1	2.00	20.0	11.0
25	6.3	21.0	14.2	2.00	20.5	13.6
25	7.0	21.1	14.3	2.00	20.9	16.4
25	7.3	21.2	14.3	2.01	21.1	17.9
25	7.7	21.5	14.7	2.01	21.2	19.4
25	8.4	21.6	14.8	2.01	21.5	22.5
32	4.6	22.8	15.9	2.02	25.0	7.3
32	5.6	23.3	16.3	2.03	26.2	10.7
32	6.3	23.4	16.5	2.04	26.8	13.2
32	7.0	23.6	16.7	2.04	27.2	16.0
32	7.3	23.7	16.7	2.04	27.5	17.5
32	7.7	23.9	16.9	2.04	27.6	18.9
32	8.4	23.9	16.9	2.04	28.0	21.9
45	4.6	27.3	20.2	2.10	36.1	6.8
45	5.6	28.0	20.8	2.12	37.6	10.0
45	6.3	28.2	20.9	2.12	38.4	12.3
45	7.0	28.4	21.2	2.12	38.9	14.9
45	7.3	28.5	21.2	2.12	39.2	16.2
45	7.7	28.5	21.3	2.12	39.5	17.6

Table 71. Heating capacities 2.5 tons (net) - GEHE030 (continued)

EWT	GPM	Htg Cap Mbtuh	Absorb Mbtuh	Power kW	LWT	Feet Head
45	8.4	28.8	21.6	2.13	39.9	20.4
55	4.6	30.8	23.4	2.16	44.7	6.6
55	5.6	31.5	24.0	2.18	46.4	9.6
55	6.3	31.8	24.3	2.18	47.3	11.9
55	7.0	32.0	24.6	2.19	48.0	14.3
55	7.3	32.3	24.8	2.20	48.3	15.6
55	7.7	32.2	24.8	2.19	48.6	16.9
55	8.4	32.4	24.9	2.19	49.1	19.7
68	4.6	34.8	27.0	2.28	56.1	6.4
68	5.6	35.7	27.9	2.30	58.0	9.3
68	6.3	36.0	28.2	2.30	59.0	11.4
68	7.0	36.4	28.5	2.30	59.9	13.8
68	7.3	36.5	28.6	2.31	60.2	15.0
68	7.7	36.6	28.7	2.31	60.5	16.3
68	8.4	36.8	28.9	2.31	61.1	18.9
75	4.6	37.4	29.5	2.33	62.1	6.2
75	5.6	38.3	30.3	2.35	64.2	9.1
75	6.3	38.7	30.6	2.36	65.3	11.1
75	7.0	39.0	30.9	2.36	66.2	13.4
75	7.3	39.2	31.1	2.37	66.5	14.6
75	7.7	39.4	31.3	2.37	66.9	15.9
75	8.4	39.7	31.6	2.38	67.5	18.5
86	4.6	41.5	33.2	2.42	71.4	5.9
86	5.6	42.5	34.2	2.45	73.8	8.7
86	6.3	43.0	34.6	2.46	75.0	10.7
86	7.0	43.4	35.0	2.47	76.0	12.8
86	7.3	43.6	35.1	2.47	76.4	14.0
86	7.7	43.7	35.3	2.48	76.8	15.2
86	8.4	44.0	35.5	2.48	77.5	17.7

Note: Heating performance data is tabulated at 68°F DB entering air at ANSI/AHRI/ASHRAE/ISO13256-1 rated cfm. For ANSI/AHRI/ASHRAE/ISO13256-1 certified ratings, refer to the ANSI/AHRI/ASHRAE/ISO13256-1 WLHP, GWHP and GLHP performance table. See performance correction tables to correct performance at conditions other than those tabulated. Data shown is for unit performance only. Interpolation of data is permissible; extrapolation is not. Rated GPM: 7.0 Maximum cfm 720; Rated cfm 900; Maximum cfm 1080.

Table 72. Fan correction factors 2.5 tons - GEHE030

Entering cfm	Cooling Capacity	Sensible Capacity	Cooling Input Watts	Heating Capacity	Heating Input Watts
720	0.955	0.877	1.002	0.986	1.082
765	0.968	0.907	1.002	0.989	1.057
810	0.979	0.939	1.001	0.993	1.037
855	0.990	0.970	1.000	0.997	1.019
900	1.000	1.000	1.000	1.000	1.000
990	1.018	1.060	0.999	1.006	0.973

Table 72. Fan correction factors 2.5 tons - GEHE030 (continued)

Entering cfm	Cooling Capacity	Sensible Capacity	Cooling Input Watts	Heating Capacity	Heating Input Watts
1035	1.025	1.089	0.999	1.009	0.961
1080	1.033	1.120	0.999	1.013	0.951

Table 73. Correction factors for variation in entering air temperature 2.5 tons, GEHE030

Cooling Entering Air WB°F	Cooling Capacity	Cooling Input Watts	Sensible vs. Entering Dry Bulb Multipliers					Heating Entering Air DB°F	Heating Capacity	Heating Input Watts
			65.6	70.6	75.6	80.6	85.6			
49.4	0.924	1.009	0.994	1.060	1.129	*	*	53.0	1.026	0.864
56.3	0.925	1.009	0.805	1.022	1.129	*	*	58.0	1.022	0.912
60.3	0.926	1.009	0.618	0.839	1.058	*	*	63.0	1.012	0.956
63.2	0.958	1.006	0.479	0.702	0.922	1.141	*	68.0	1.000	1.000
66.2	1.000	1.000	—	0.553	0.775	1.000	1.220	73.0	0.991	1.051
72.1	1.090	0.989	—	—	0.480	0.706	0.928	78.0	0.981	1.101
77.1	1.166	0.984	—	—	—	0.446	0.672	83.0	0.972	1.154

Note: * = Sensible equals total capacity

Table 74. Cooling capacities 2.5 tons (gross) - GEVG030

EWT	GPM	Total Mbtuh	Sen Mbtuh	SHR	Comp Pwr kW	Reject Mbtuh	LWT	Feet Head
45	4.9	34.2	27.3	0.80	1.22	38.4	60.7	4.7
45	6.0	34.2	27.3	0.80	1.21	38.3	57.8	6.9
45	6.8	34.2	27.3	0.80	1.21	38.3	56.3	8.7
45	7.5	34.1	27.2	0.80	1.21	38.2	55.2	10.4
45	7.9	34.1	27.2	0.80	1.21	38.2	54.7	11.4
45	8.3	34.1	27.2	0.80	1.21	38.2	54.2	12.5
45	9.0	34.1	27.2	0.80	1.21	38.2	53.5	14.4
55	4.9	33.7	26.8	0.80	1.30	38.1	70.6	4.3
55	6.0	33.7	26.8	0.80	1.27	38.0	67.7	6.3
55	6.8	33.7	26.8	0.80	1.26	38.0	66.2	7.9
55	7.5	33.7	26.8	0.80	1.25	38.0	65.1	9.4
55	7.9	33.7	26.8	0.80	1.25	38.0	64.6	10.3
55	8.3	33.7	26.8	0.80	1.25	37.9	64.1	11.3
55	9.0	33.7	26.8	0.80	1.24	37.9	63.4	13.1
68	4.9	32.6	26.1	0.80	1.48	37.7	83.4	4.0
68	6.0	32.6	26.1	0.80	1.45	37.5	80.5	5.7
68	6.8	32.6	26.1	0.80	1.43	37.5	79.0	7.2
68	7.5	32.7	26.2	0.80	1.41	37.5	78.0	8.5
68	7.9	32.7	26.2	0.80	1.41	37.5	77.5	9.4
68	8.3	32.7	26.2	0.80	1.40	37.5	77.0	10.3
68	9.0	32.7	26.2	0.80	1.39	37.4	76.3	11.9
75	4.9	31.8	25.7	0.81	1.62	37.3	90.2	3.9
75	6.0	31.9	25.8	0.81	1.57	37.3	87.4	5.6
75	6.8	31.9	25.8	0.81	1.55	37.2	85.9	6.9
75	7.5	31.9	25.8	0.81	1.54	37.1	84.9	8.2

Table 74. Cooling capacities 2.5 tons (gross) - GEVG030 (continued)

EWT	GPM	Total Mbtuh	Sen Mbtuh	SHR	Comp Pwr kW	Reject Mbtuh	LWT	Feet Head
75	7.9	31.9	25.8	0.81	1.53	37.1	84.4	9.0
75	8.3	32.0	25.9	0.81	1.52	37.2	84.0	9.9
75	9.0	32.0	25.9	0.81	1.51	37.2	83.3	11.4
86	4.9	30.4	24.9	0.82	1.87	36.8	101.0	3.9
86	6.0	30.5	25.0	0.82	1.82	36.7	98.2	5.4
86	6.8	30.6	25.1	0.82	1.79	36.7	96.8	6.7
86	7.5	30.6	25.1	0.82	1.78	36.7	95.8	7.9
86	7.9	30.6	25.1	0.82	1.77	36.6	95.3	8.6
86	8.3	30.6	25.1	0.82	1.76	36.6	94.8	9.4
86	9.0	30.7	25.2	0.82	1.75	36.7	94.2	10.8
95	4.9	29.1	24.2	0.83	2.10	36.3	109.8	3.8
95	6.0	29.2	24.3	0.83	2.05	36.2	107.1	5.3
95	6.8	29.3	24.4	0.83	2.02	36.2	105.6	6.5
95	7.5	29.3	24.4	0.83	2.00	36.1	104.6	7.7
95	7.9	29.3	24.4	0.83	1.99	36.1	104.1	8.4
95	8.3	29.4	24.5	0.83	1.98	36.2	103.7	9.1
95	9.0	29.4	24.5	0.83	1.97	36.1	103.0	10.5
105	4.9	27.5	23.4	0.85	2.38	35.6	119.5	3.7
105	6.0	27.6	23.5	0.85	2.33	35.5	116.8	5.2
105	6.8	27.7	23.6	0.85	2.30	35.5	115.4	6.4
105	7.5	27.7	23.6	0.85	2.28	35.5	114.5	7.5
105	7.9	27.8	23.6	0.85	2.27	35.5	114.0	8.2
105	8.3	27.8	23.6	0.85	2.26	35.5	113.6	8.9
105	9.0	27.8	23.6	0.85	2.25	35.5	112.9	10.2
115	4.9	25.7	22.4	0.87	2.68	34.9	129.2	3.5
115	6.0	25.9	22.6	0.87	2.63	34.9	126.6	4.9
115	6.8	25.9	22.6	0.87	2.60	34.8	125.2	6.2
115	7.5	26.0	22.7	0.87	2.58	34.8	124.3	7.3
115	7.9	26.0	22.7	0.87	2.57	34.8	123.8	8.0
115	8.3	26.0	22.7	0.87	2.56	34.7	123.4	8.7
115	9.0	26.1	22.8	0.87	2.55	34.8	122.7	10.0

Note: Cooling performance data is tabulated at 80.6°F DB/66.2°F WB entering air at ANSI/AHRI/ASHRAE/ISO13256-1 rated cfm. For conditions other than what is tabulated, multipliers must be used to correct performance. See performance correction tables for fan correction factors for CFM other than rated and the cooling correction factors for variations in entering air temperature. Rated GPM 7.5; Minimum CFM 760; Rated CFM 950; Maximum CFM 1140.

Table 75. Heating capacities 2.5 tons (gross) - GEVG030

EWT	GPM	Htg Cap Mbtuh	Absorb Mbtuh	Comp Pwr kW	LWT	Feet Head
25	4.9	18.5	12.7	1.71	19.8	6.3
25	6.0	19.2	13.4	1.71	20.5	9.0
25	6.8	19.5	13.7	1.71	21.0	11.2
25	7.5	19.8	14.0	1.71	21.3	13.3
25	7.9	19.9	14.0	1.72	21.5	14.6
25	8.3	20.0	14.1	1.72	21.6	15.9

Table 75. Heating capacities 2.5 tons (gross) - GEVG030 (continued)

EWT	GPM	Htg Cap Mbtuh	Absorb Mbtuh	Comp Pwr kW	LWT	Feet Head
25	9.0	20.1	14.2	1.72	21.8	18.3
32	4.9	20.4	14.5	1.74	26.1	5.6
32	6.0	21.0	15.0	1.75	27.0	8.1
32	6.8	21.4	15.4	1.75	27.5	10.2
32	7.5	21.7	15.7	1.76	27.8	12.1
32	7.9	21.8	15.8	1.76	28.0	13.3
32	8.3	21.9	15.9	1.76	28.2	14.5
32	9.0	22.0	16.0	1.76	28.4	16.7
45	4.9	26.6	20.3	1.85	36.7	4.7
45	6.0	27.3	21.0	1.86	38.0	6.9
45	6.8	27.7	21.3	1.87	38.7	8.7
45	7.5	27.9	21.5	1.87	39.3	10.4
45	7.9	28.0	21.6	1.87	39.5	11.4
45	8.3	28.1	21.7	1.87	39.8	12.5
45	9.0	28.3	21.9	1.88	40.1	14.4
55	4.9	30.6	24.0	1.94	45.2	4.3
55	6.0	31.2	24.5	1.95	46.8	6.3
55	6.8	31.6	24.9	1.96	47.7	7.9
55	7.5	31.8	25.1	1.96	48.3	9.4
55	7.9	32.0	25.3	1.97	48.6	10.3
55	8.3	32.0	25.3	1.97	48.9	11.3
55	9.0	32.2	25.5	1.97	49.3	13.1
68	4.9	35.0	28.0	2.05	56.6	4.0
68	6.0	35.7	28.6	2.07	58.5	5.7
68	6.8	36.0	28.9	2.08	59.5	7.2
68	7.5	36.3	29.2	2.09	60.2	8.5
68	7.9	36.4	29.3	2.09	60.6	9.4
68	8.3	36.5	29.4	2.09	60.9	10.3
68	9.0	36.6	29.4	2.10	61.5	11.9
75	4.9	37.8	30.6	2.11	62.5	3.9
75	6.0	38.5	31.2	2.13	64.6	5.6
75	6.8	38.9	31.6	2.14	65.7	6.9
75	7.5	39.1	31.8	2.15	66.5	8.2
75	7.9	39.2	31.9	2.15	66.9	9.0
75	8.3	39.3	31.9	2.16	67.3	9.9
75	9.0	39.5	32.1	2.16	67.9	11.4
86	4.9	42.1	34.6	2.20	71.9	3.9
86	6.0	42.8	35.2	2.23	74.3	5.4
86	6.8	43.1	35.5	2.24	75.6	6.7
86	7.5	43.4	35.7	2.25	76.5	7.9
86	7.9	43.5	35.8	2.25	76.9	8.6

Table 75. Heating capacities 2.5 tons (gross) - GEVG030 (continued)

EWT	GPM	Htg Cap Mbtuh	Absorb Mbtuh	Comp Pwr kW	LWT	Feet Head
86	8.3	43.6	35.9	2.25	77.3	9.4
86	9.0	43.7	36.0	2.26	78.0	10.8

Note: Heating performance data is tabulated at 68.0°F DB at the ANSI/AHRI/ASHRAE/ISO13256-1 rated cfm. For conditions other than what is tabulated, multipliers must be used to correct performance. See performance correction tables for fan correction factors for CFM other than rated and the heating correction factors for variation in entering air temperatures. Rated GPM 7.5;Minimum CFM 760; Rated CFM 950; Maximum CFM 1140.

Table 76. Fan correction factors 2.5 tons - GEVG030

Entering cfm	Cooling Capacity	Sensible Capacity	Cooling Input Watts	Heating Capacity	Heating Input Watts
760	0.959	0.872	0.998	0.986	1.096
808	0.972	0.904	0.998	0.990	1.067
855	0.982	0.937	0.999	0.994	1.042
903	0.991	0.969	1.000	0.997	1.020
950	1.000	1.000	1.000	1.000	1.000
1045	1.016	1.061	1.001	1.004	0.966
1093	1.023	1.092	1.001	1.006	0.950
1140	1.029	1.123	1.002	1.008	0.937

Table 77. Correction factors for variation in entering air temperature 2.5 tons, GEVG030

Cooling Entering Air WB°F	Cooling Capacity	Cooling Input Watts	Sensible vs. Entering Dry Bulb Multipliers					Heating Entering Air DB°F	Heating Capacity	Heating Input Watts
			65.6	70.6	75.6	80.6	85.6			
49.4	0.886	0.996	0.944	1.026	1.092	*	*	53.0	1.026	0.836
56.3	0.888	0.996	0.804	0.952	1.065	*	*	58.0	1.019	0.888
60.3	0.907	0.997	0.650	0.849	1.001	1.120	*	63.0	1.010	0.943
63.2	0.952	0.998	0.504	0.743	0.927	1.072	*	68.0	1.000	1.000
66.2	1.000	1.000	–	0.605	0.825	1.000	1.141	73.0	0.988	1.059
72.1	1.111	1.008	–	–	0.549	0.789	0.984	78.0	0.976	1.120
77.1	1.212	1.018	–	–	–	–	0.784	83.0	0.963	1.184

Note: * = Sensible equals total capacity

Cooling and Heating Capacities 3 tons

Table 78. Cooling capacities 3 tons (net) - GEHE035

EWT	GPM	Total Mbtuh	Sen Mbtuh	SHR	Power kW	Reject Mbtuh	LWT	Feet Head
45	5.4	38.7	28.0	0.72	1.17	44.7	61.6	5.9
45	6.6	38.8	28.1	0.72	1.10	44.6	58.5	8.5
45	7.5	38.9	28.2	0.72	1.07	44.6	56.9	10.7
45	8.4	38.9	28.2	0.72	1.04	44.5	55.6	13.2
45	8.7	38.9	28.2	0.72	1.04	44.4	55.2	14.1
45	9.1	39.0	28.2	0.72	1.03	44.5	54.8	15.3
45	10.0	39.0	28.2	0.72	1.01	44.4	53.9	18.2
55	5.4	37.8	27.8	0.74	1.40	44.6	71.5	5.3
55	6.6	37.9	27.8	0.73	1.34	44.5	68.5	7.6
55	7.5	38.0	27.9	0.73	1.31	44.5	66.9	9.7
55	8.4	38.0	27.9	0.73	1.28	44.4	65.6	11.9

Table 78. Cooling capacities 3 tons (net) - GEHE035 (continued)

EWT	GPM	Total Mbtuh	Sen Mbtuh	SHR	Power kW	Reject Mbtuh	LWT	Feet Head
55	8.7	38.1	28.0	0.73	1.27	44.4	65.2	12.7
55	9.1	38.1	28.0	0.73	1.26	44.4	64.8	13.8
55	10.0	38.1	28.0	0.73	1.25	44.4	63.9	16.4
68	5.4	36.0	26.8	0.74	1.70	43.8	84.2	4.9
68	6.6	36.1	26.9	0.75	1.64	43.7	81.2	7.0
68	7.5	36.1	26.9	0.75	1.60	43.6	79.6	8.8
68	8.4	36.2	27.0	0.75	1.58	43.6	78.4	10.8
68	8.7	36.2	27.0	0.75	1.57	43.6	78.0	11.5
68	9.1	36.2	27.0	0.75	1.56	43.5	77.6	12.5
68	10.0	36.3	27.1	0.75	1.54	43.6	76.7	14.8
75	5.4	34.9	26.3	0.75	1.87	43.3	91.0	4.8
75	6.6	34.9	26.3	0.75	1.80	43.1	88.1	6.8
75	7.5	35.0	26.4	0.75	1.77	43.0	86.5	8.5
75	8.4	35.1	26.4	0.75	1.74	43.0	85.2	10.4
75	8.7	35.1	26.4	0.75	1.73	43.0	84.9	11.0
75	9.1	35.1	26.4	0.75	1.73	43.0	84.5	12.0
75	10.0	35.1	26.4	0.75	1.71	42.9	83.6	14.2
86	5.4	33.0	25.5	0.77	2.15	42.3	101.7	4.7
86	6.6	33.1	25.6	0.77	2.08	42.2	98.8	6.5
86	7.5	33.2	25.7	0.77	2.05	42.2	97.3	8.1
86	8.4	33.2	25.7	0.77	2.02	42.1	96.0	9.9
86	8.7	33.2	25.7	0.77	2.02	42.1	95.7	10.5
86	9.1	33.3	25.7	0.77	2.01	42.1	95.3	11.4
86	10.0	33.3	25.7	0.77	1.99	42.1	94.4	13.4
95	5.4	31.5	25.0	0.79	2.40	41.7	110.4	4.6
95	6.6	31.6	25.1	0.79	2.34	41.6	107.6	6.4
95	7.5	31.7	25.2	0.79	2.31	41.6	106.1	7.9
95	8.4	31.7	25.2	0.79	2.28	41.5	104.9	9.6
95	8.7	31.8	25.3	0.80	2.27	41.6	104.6	10.2
95	9.1	31.8	25.3	0.80	2.26	41.5	104.1	11.1
95	10.0	31.8	25.3	0.80	2.25	41.5	103.3	13.0
105	5.4	29.9	24.6	0.82	2.73	41.2	120.3	4.4
105	6.6	29.9	24.6	0.82	2.66	41.0	117.4	6.2
105	7.5	30.0	24.7	0.82	2.63	41.0	115.9	7.7
105	8.4	30.1	24.8	0.82	2.60	41.0	114.8	9.4
105	8.7	30.1	24.8	0.82	2.59	41.0	114.4	9.9
105	9.1	30.1	24.8	0.82	2.58	40.9	114.0	10.7
105	10.0	30.1	24.8	0.82	2.57	40.9	113.2	12.6
110	5.4	29.0	24.3	0.84	2.90	40.9	125.1	4.2
110	6.6	29.1	24.4	0.84	2.84	40.8	122.4	6.0
110	7.5	29.1	24.4	0.84	2.80	40.7	120.9	7.5

Table 78. Cooling capacities 3 tons (net) - GEHE035 (continued)

EWT	GPM	Total Mbtuh	Sen Mbtuh	SHR	Power kW	Reject Mbtuh	LWT	Feet Head
110	8.4	29.2	24.5	0.84	2.78	40.7	119.7	9.2
110	8.7	29.2	24.5	0.84	2.77	40.7	119.4	9.8
110	9.1	29.2	24.5	0.84	2.76	40.6	118.9	10.6
110	10.0	29.3	24.5	0.84	2.74	40.7	118.1	12.4

Note: Cooling performance data is tabulated at 80.6°F DB/66.2°F WB entering air at ANSI/AHRI/ASHRAE/ISO13256-1 rated cfm. For ANSI/AHRI/ASHRAE/ISO13256-1 certified ratings, refer to the ANSI/AHRI/ASHRAE/ISO13256-1 WLHP, GWHP and GLHP performance table. See performance correction tables to correct performance at conditions other than those tabulated. Data shown is for unit performance only. Interpolation of data is permissible; extrapolation is not. Rated GPM: 8.4 Minimum cfm 912; Rated cfm 1140; Maximum cfm 1368.

Table 79. Heating capacities 3 tons (net) - GEHE035

EWT	GPM	Htg Cap Mbtuh	Absorb Mbtuh	Power kW	LWT	Feet Head
25	7.5	24.8	16.6	1.81	20.6	14.1
25	8.4	25.0	16.8	1.81	21.0	17.2
25	8.7	25.1	16.9	1.81	21.1	18.3
25	9.1	25.1	16.9	1.81	21.3	19.7
25	10.0	25.3	17.1	1.81	21.6	23.3
32	5.4	26.7	18.4	1.83	25.2	7.2
32	6.6	27.3	19.0	1.84	26.2	10.1
32	7.5	27.5	19.2	1.84	26.9	12.7
32	8.4	27.8	19.5	1.85	27.4	15.5
32	8.7	27.8	19.5	1.85	27.5	16.5
32	9.1	27.9	19.6	1.85	27.7	17.9
32	10.0	28.1	19.8	1.85	28.0	21.2
45	5.4	31.7	23.2	1.91	36.4	5.9
45	6.6	32.4	23.9	1.92	37.8	8.5
45	7.5	32.7	24.1	1.92	38.6	10.7
45	8.4	33.0	24.4	1.93	39.2	13.2
45	8.7	33.1	24.5	1.93	39.4	14.1
45	9.1	33.2	24.6	1.93	39.6	15.3
45	10.0	33.5	24.9	1.93	40.0	18.2
55	5.4	35.7	27.0	1.97	45.0	5.3
55	6.6	36.5	27.7	1.98	46.6	7.6
55	7.5	37.0	28.2	1.99	47.5	9.7
55	8.4	37.4	28.6	2.00	48.2	11.9
55	8.7	37.5	28.7	2.00	48.4	12.7
55	9.1	37.6	28.8	2.00	48.7	13.8
55	10.0	37.9	29.0	2.01	49.2	16.4
68	5.4	41.3	32.2	2.07	56.1	4.9
68	6.6	42.3	33.2	2.09	57.9	7.0
68	7.5	42.9	33.7	2.10	59.0	8.8
68	8.4	43.4	34.2	2.11	59.9	10.8
68	8.7	43.6	34.4	2.12	60.1	11.5
68	9.1	43.8	34.6	2.12	60.4	12.5

Table 79. Heating capacities 3 tons (net) - GEHE035 (continued)

EWT	GPM	Htg Cap Mbtuh	Absorb Mbtuh	Power kW	LWT	Feet Head
68	10.0	44.1	34.8	2.13	61.0	14.8
75	5.4	44.5	35.2	2.13	62.0	4.8
75	6.6	45.7	36.3	2.16	64.0	6.8
75	7.5	46.4	37.0	2.17	65.1	8.5
75	8.4	47.0	37.5	2.19	66.1	10.4
75	8.7	47.1	37.6	2.19	66.4	11.0
75	9.1	47.4	37.9	2.20	66.7	12.0
75	10.0	47.8	38.3	2.21	67.3	14.2
86	5.4	49.9	40.2	2.26	71.1	4.7
86	6.6	51.3	41.5	2.29	73.4	6.5
86	7.5	52.2	42.3	2.31	74.7	8.1
86	8.4	53.0	43.0	2.33	75.8	9.9
86	8.7	53.2	43.2	2.34	76.1	10.5
86	9.1	53.4	43.4	2.34	76.5	11.4
86	10.0	54.0	44.0	2.36	77.2	13.4

Note: Heating performance data is tabulated at 68°F DB entering air at ANSI/AHRI/ASHRAE/ISO13256-1 rated cfm. For ANSI/AHRI/ASHRAE/ISO13256-1 certified ratings, refer to the ANSI/AHRI/ASHRAE/ISO13256-1 WLHP, GWHP and GLHP performance table. See performance correction tables to correct performance at conditions other than those tabulated. Data shown is for unit performance only. Interpolation of data is permissible; extrapolation is not. Rated GPM: 8.4 Minimum cfm 912; Rated cfm 1140; Maximum cfm 1368.

Table 80. Fan correction factors 3 tons - GEHE035

Entering cfm	Cooling Capacity	Sensible Capacity	Cooling Input Watts	Heating Capacity	Heating Input Watts
912	0.962	0.875	1.001	0.983	1.090
969	0.973	0.905	1.001	0.988	1.063
1026	0.983	0.936	1.000	0.993	1.039
1083	0.992	0.968	1.000	0.996	1.018
1140	1.000	1.000	1.000	1.000	1.000
1254	1.015	1.062	1.000	1.006	0.969
1311	1.021	1.091	0.999	1.009	0.955
1368	1.027	1.118	0.999	1.011	0.943

Table 81. Correction factors for variation in entering air temperature 3 tons, GEHE035

Cooling Entering Air WB°F	Cooling Capacity	Cooling Input Watts	Sensible vs. Entering Dry Bulb Multipliers					Heating Entering Air DB°F	Heating Capacity	Heating Input Watts
			65.6	70.6	75.6	80.6	85.6			
49.4	0.723	1.011	*	*	*	*	53.0	1.024	0.828	49.4
56.3	0.830	1.005	0.813	0.939	*	*	58.0	1.016	0.883	56.3
60.3	0.896	1.002	0.656	0.861	1.075	*	63.0	1.008	0.940	60.3
63.2	0.946	1.001	0.487	0.751	1.058	1.135	68.0	1.000	1.000	63.2
66.2	1.000	1.000	–	–	1.000	1.116	73.0	0.991	1.064	66.2
72.1	1.111	0.999	–	–	0.781	0.976	78.0	0.983	1.131	72.1
77.1	1.211	1.001	–	–	–	0.767	83.0	0.975	1.202	77.1

Note: * = Sensible equals total capacity

Table 82. Cooling capacities 3 tons (gross) - GEVG036

EWT	GPM	Total Mbtuh	Sen Mbtuh	SHR	Comp Pwr kW	Reject Mbtuh	LWT	Feet Head
45	5.9	41.7	30.5	0.73	1.52	46.9	60.9	7.0
45	7.2	41.8	30.6	0.73	1.51	46.9	58.0	10.1
45	8.1	41.9	30.6	0.73	1.50	47.0	56.6	12.5
45	9.0	41.9	30.6	0.73	1.50	47.0	55.4	15.1
45	9.5	41.9	30.6	0.73	1.50	47.0	54.9	16.7
45	9.9	42.0	30.7	0.73	1.50	47.1	54.5	18.0
45	10.8	42.0	30.7	0.73	1.50	47.1	53.7	21.0
55	5.9	41.2	30.1	0.73	1.62	46.7	70.8	6.4
55	7.2	41.3	30.2	0.73	1.59	46.7	68.0	9.2
55	8.1	41.4	30.3	0.73	1.58	46.8	66.6	11.4
55	9.0	41.4	30.3	0.73	1.57	46.7	65.4	13.8
55	9.5	41.4	30.3	0.73	1.56	46.7	64.8	15.2
55	9.9	41.4	30.3	0.73	1.56	46.7	64.4	16.4
55	10.8	41.5	30.4	0.73	1.55	46.8	63.7	19.2
68	5.9	39.8	29.7	0.75	1.84	46.1	83.6	6.0
68	7.2	39.9	29.8	0.75	1.80	46.0	80.8	8.5
68	8.1	39.9	29.8	0.75	1.77	46.0	79.4	10.5
68	9.0	39.9	29.8	0.75	1.76	45.9	78.2	12.6
68	9.5	40.0	29.8	0.75	1.75	46.0	77.7	13.9
68	9.9	40.0	29.8	0.75	1.74	45.9	77.3	15.0
68	10.8	40.0	29.8	0.75	1.73	45.9	76.5	17.5
75	5.9	38.8	29.4	0.76	2.01	45.6	90.5	5.9
75	7.2	38.9	29.5	0.76	1.95	45.6	87.7	8.3
75	8.1	39.0	29.6	0.76	1.93	45.6	86.3	10.1
75	9.0	39.0	29.6	0.76	1.90	45.5	85.1	12.2
75	9.5	39.0	29.6	0.76	1.90	45.5	84.6	13.4
75	9.9	39.0	29.6	0.76	1.89	45.4	84.2	14.4
75	10.8	39.1	29.6	0.76	1.87	45.5	83.4	16.9
86	5.9	37.3	29.0	0.78	2.31	45.2	101.3	5.8
86	7.2	37.4	29.0	0.78	2.25	45.1	98.5	8.0
86	8.1	37.4	29.0	0.78	2.21	45.0	97.1	9.8
86	9.0	37.5	29.1	0.78	2.19	45.0	96.0	11.7
86	9.5	37.5	29.1	0.78	2.18	44.9	95.5	12.9
86	9.9	37.5	29.1	0.78	2.17	44.9	95.1	13.8
86	10.8	37.5	29.1	0.78	2.15	44.8	94.3	16.1
95	5.9	35.9	28.4	0.79	2.59	44.7	110.2	5.7
95	7.2	36.0	28.5	0.79	2.53	44.6	107.4	7.9
95	8.1	36.0	28.5	0.79	2.49	44.5	106.0	9.6
95	9.0	36.1	28.6	0.79	2.47	44.5	104.9	11.5
95	9.5	36.1	28.6	0.79	2.45	44.5	104.4	12.6
95	9.9	36.1	28.6	0.79	2.44	44.4	104.0	13.5

Table 82. Cooling capacities 3 tons (gross) - GEVG036 (continued)

EWT	GPM	Total Mbtuh	Sen Mbtuh	SHR	Comp Pwr kW	Reject Mbtuh	LWT	Feet Head
95	10.8	36.1	28.6	0.79	2.43	44.4	103.2	15.7
105	5.9	34.1	27.6	0.81	2.94	44.1	119.9	5.6
105	7.2	34.2	27.7	0.81	2.87	44.0	117.2	7.7
105	8.1	34.2	27.7	0.81	2.84	43.9	115.8	9.4
105	9.0	34.2	27.7	0.81	2.81	43.8	114.7	11.2
105	9.5	34.3	27.8	0.81	2.80	43.8	114.2	12.3
105	9.9	34.3	27.8	0.81	2.79	43.8	113.8	13.2
105	10.8	34.3	27.8	0.81	2.77	43.7	113.1	15.3
115	5.9	32.0	26.6	0.83	3.31	43.3	129.7	5.2
115	7.2	32.1	26.7	0.83	3.24	43.2	127.0	7.4
115	8.1	32.2	26.8	0.83	3.21	43.2	125.7	9.1
115	9.0	32.2	26.8	0.83	3.18	43.1	124.6	10.9
115	9.5	32.2	26.8	0.83	3.17	43.0	124.1	12.0
115	9.9	32.2	26.8	0.83	3.16	43.0	123.7	12.9
115	10.8	32.3	26.9	0.83	3.14	43.0	123.0	15.0

Note: Cooling performance data is tabulated at 80.6°F DB/66.2°F WB entering air at ANSI/AHRI/ASHRAE/ISO13256-1 rated cfm. For conditions other than what is tabulated, multipliers must be used to correct performance. See performance correction tables for fan correction factors for CFM other than rated and the cooling correction factors for variations in entering air temperature. Rated GPM 9; Minimum CFM 912; Rated CFM 1140; Maximum CFM 1368.

Table 83. Heating capacities 3 tons (gross) - GEVG036

EWT	GPM	Htg Cap Mbtuh	Absorb Mbtuh	Comp Pwr kW	LWT	Feet Head
25	5.9	23.5	16.4	2.07	19.4	9.3
25	7.2	24.1	17.0	2.08	20.3	13.2
25	8.1	24.5	17.4	2.08	20.7	16.2
25	9.0	24.7	17.6	2.09	21.1	19.3
25	9.5	24.9	17.8	2.09	21.3	21.2
25	9.9	25.0	17.9	2.09	21.4	22.8
25	10.8	25.1	18.0	2.09	21.7	26.4
32	5.9	25.9	18.6	2.13	25.7	8.3
32	7.2	26.6	19.3	2.13	26.6	11.9
32	8.1	26.9	19.6	2.14	27.2	14.6
32	9.0	27.2	19.9	2.14	27.6	17.6
32	9.5	27.3	20.0	2.14	27.8	19.3
32	9.9	27.4	20.1	2.14	27.9	20.8
32	10.8	27.6	20.3	2.15	28.2	24.2
45	5.9	32.6	25.0	2.22	36.5	7.0
45	7.2	33.3	25.7	2.24	37.9	10.1
45	8.1	33.6	26.0	2.24	38.6	12.5
45	9.0	33.9	26.2	2.25	39.2	15.1
45	9.5	34.0	26.3	2.25	39.5	16.7
45	9.9	34.1	26.4	2.25	39.7	18.0
45	10.8	34.3	26.6	2.25	40.1	21.0
55	5.9	37.1	29.2	2.31	45.1	6.4

Table 83. Heating capacities 3 tons (gross) - GEVG036 (continued)

EWT	GPM	Htg Cap Mbtuh	Absorb Mbtuh	Comp Pwr kW	LWT	Feet Head
55	7.2	37.8	29.9	2.32	46.7	9.2
55	8.1	38.1	30.2	2.33	47.5	11.4
55	9.0	38.4	30.4	2.34	48.2	13.8
55	9.5	38.5	30.5	2.34	48.6	15.2
55	9.9	38.6	30.6	2.34	48.8	16.4
55	10.8	38.8	30.8	2.35	49.3	19.2
68	5.9	42.6	34.3	2.43	56.4	6.0
68	7.2	43.3	34.9	2.45	58.3	8.5
68	8.1	43.7	35.3	2.46	59.3	10.5
68	9.0	43.9	35.5	2.47	60.1	12.6
68	9.5	44.1	35.7	2.48	60.5	13.9
68	9.9	44.1	35.6	2.48	60.8	15.0
68	10.8	44.3	35.8	2.49	61.4	17.5
75	5.9	46.0	37.4	2.51	62.3	5.9
75	7.2	46.7	38.1	2.54	64.4	8.3
75	8.1	47.0	38.3	2.55	65.5	10.1
75	9.0	47.3	38.6	2.56	66.4	12.2
75	9.5	47.4	38.7	2.56	66.9	13.4
75	9.9	47.5	38.7	2.57	67.2	14.4
75	10.8	47.7	38.9	2.57	67.8	16.9
86	5.9	51.2	42.1	2.66	71.7	5.8
86	7.2	51.8	42.6	2.69	74.2	8.0
86	8.1	52.2	43.0	2.70	75.4	9.8
86	9.0	52.4	43.1	2.72	76.4	11.7
86	9.5	52.6	43.3	2.72	76.9	12.9
86	9.9	52.7	43.4	2.73	77.2	13.8
86	10.8	52.8	43.5	2.73	77.9	16.1

Note: Heating performance data is tabulated at 68.0°F DB at the ANSI/AHRI/ASHRAE/ISO13256-1 rated cfm. For conditions other than what is tabulated, multipliers must be used to correct performance. See performance correction tables for fan correction factors for CFM other than rated and the heating correction factors for variation in entering air temperatures. Rated GPM 9;Minimum CFM 912; Rated CFM 1140; Maximum CFM 1368.

Table 84. Fan correction factors 3 tons - GEVG036

Entering cfm	Cooling Capacity	Sensible Capacity	Cooling Input Watts	Heating Capacity	Heating Input Watts
912	0.961	0.893	0.998	0.981	1.092
969	0.972	0.921	0.998	0.987	1.065
1026	0.982	0.948	0.999	0.992	1.041
1083	0.991	0.974	0.999	0.996	1.019
1140	1.000	1.000	1.000	1.000	1.000
1254	1.015	1.050	1.001	1.007	0.967
1311	1.021	1.074	1.002	1.010	0.953
1368	1.028	1.098	1.002	1.012	0.940

Table 85. Correction factors for variation in entering air temperature 3 tons, GEVG036

Cooling Entering Air WB°F	Cooling Capacity	Cooling Input Watts	Sensible vs. Entering Dry Bulb Multipliers					Heating Entering Air DB°F	Heating Capacity	Heating Input Watts
			65.6	70.6	75.6	80.6	85.6			
49.4	0.883	0.997	0.958	1.047	1.118	*	*	53.0	1.035	0.846
56.3	0.883	0.996	0.819	0.968	1.085	*	*	58.0	1.025	0.895
60.3	0.898	0.997	0.675	0.864	1.015	1.137	*	63.0	1.013	0.946
63.2	0.946	0.998	0.542	0.760	0.936	1.080	1.202	68.0	1.000	1.000
66.2	1.000	1.000	–	0.630	0.833	1.000	1.141	73.0	0.986	1.057
72.1	1.110	1.009	–	–	0.573	0.786	0.967	78.0	0.972	1.117
77.1	1.208	1.021	–	–	–	–	0.773	83.0	0.958	1.178

Note: * = Sensible equals total capacity

Cooling and Heating Capacities 3.5 tons

Table 86. Cooling capacities 3.5 tons (net) - GEHE042

EWT	GPM	Total Mbtuh	Sen Mbtuh	SHR	Power kW	Reject Mbtuh	LWT	Feet Head
45	6.4	47.1	34.2	0.73	2.22	54.7	62.2	7.8
45	7.8	47.4	34.4	0.73	2.16	54.8	59.0	11.3
45	8.8	47.6	34.6	0.73	2.13	54.9	57.5	13.8
45	9.8	47.7	34.6	0.73	2.11	54.9	56.2	16.6
45	10.3	47.7	34.6	0.73	2.11	54.9	55.7	18.1
45	10.8	47.8	34.7	0.73	2.10	55.0	55.2	19.6
45	11.8	47.9	34.7	0.73	2.08	55.0	54.3	22.9
55	6.4	45.5	33.6	0.74	2.44	53.9	71.9	7.5
55	7.8	45.8	33.7	0.74	2.38	53.9	68.7	10.8
55	8.8	45.9	33.8	0.74	2.35	53.9	67.2	13.3
55	9.8	46.0	33.9	0.74	2.33	54.0	66.0	16.0
55	10.3	46.1	34.0	0.74	2.32	54.0	65.5	17.4
55	10.8	46.1	34.0	0.74	2.31	54.0	65.0	18.9
55	11.8	46.2	34.1	0.74	2.30	54.0	64.2	21.9
68	6.4	44.0	33.3	0.76	2.75	53.4	84.8	7.0
68	7.8	44.3	33.5	0.76	2.68	53.4	81.6	10.1
68	8.8	44.4	33.5	0.76	2.65	53.4	80.1	12.5
68	9.8	44.5	33.6	0.76	2.63	53.4	78.9	15.0
68	10.3	44.5	33.6	0.76	2.62	53.4	78.4	16.3
68	10.8	44.5	33.7	0.76	2.61	53.4	77.9	17.7
68	11.8	44.6	33.7	0.76	2.59	53.4	77.1	20.6
75	6.4	42.7	32.8	0.77	2.95	52.8	91.6	6.8
75	7.8	42.9	32.9	0.77	2.87	52.8	88.5	9.9
75	8.8	43.1	33.1	0.77	2.84	52.8	87.0	12.1
75	9.8	43.2	33.1	0.77	2.81	52.8	85.8	14.6
75	10.3	43.2	33.1	0.77	2.80	52.8	85.3	15.9
75	10.8	43.2	33.2	0.77	2.79	52.8	84.8	17.2
75	11.8	43.3	33.2	0.77	2.78	52.8	84.0	20.1

Table 86. Cooling capacities 3.5 tons (net) - GEHE042 (continued)

EWT	GPM	Total Mbtuh	Sen Mbtuh	SHR	Power kW	Reject Mbtuh	LWT	Feet Head
86	6.4	40.8	32.2	0.79	3.29	52.0	102.3	6.5
86	7.8	41.0	32.4	0.79	3.20	52.0	99.3	9.5
86	8.8	41.1	32.4	0.79	3.17	51.9	97.8	11.6
86	9.8	41.2	32.5	0.79	3.14	51.9	96.6	14.0
86	10.3	41.3	32.5	0.79	3.12	51.9	96.1	15.2
86	10.8	41.3	32.6	0.79	3.11	51.9	95.6	16.5
86	11.8	41.3	32.6	0.79	3.09	51.9	94.8	19.2
95	6.4	38.9	31.4	0.81	3.62	51.3	111.1	6.2
95	7.8	39.1	31.6	0.81	3.54	51.2	108.1	8.9
95	8.8	39.2	31.7	0.81	3.50	51.2	106.6	11.0
95	9.8	39.3	31.7	0.81	3.46	51.1	105.4	13.3
95	10.3	39.3	31.8	0.81	3.45	51.1	104.9	14.4
95	10.8	39.4	31.8	0.81	3.44	51.1	104.5	15.7
95	11.8	39.4	31.8	0.81	3.42	51.1	103.7	18.3
105	6.4	36.7	30.5	0.83	4.06	50.5	120.9	6.0
105	7.8	36.9	30.7	0.83	3.96	50.4	117.9	8.7
105	8.8	37.0	30.8	0.83	3.91	50.4	116.4	10.7
105	9.8	37.1	30.9	0.83	3.88	50.3	115.3	12.9
105	10.3	37.1	30.9	0.83	3.86	50.3	114.8	14.1
105	10.8	37.1	30.9	0.83	3.85	50.3	114.3	15.3
105	11.8	37.2	31.0	0.83	3.83	50.2	113.5	17.8
110	6.4	35.5	30.1	0.85	4.30	50.2	125.8	5.9
110	7.8	35.7	30.3	0.85	4.20	50.1	122.8	8.6
110	8.8	35.8	30.3	0.85	4.15	50.0	121.3	10.6
110	9.8	35.9	30.4	0.85	4.11	49.9	120.2	12.7
110	10.3	35.9	30.4	0.85	4.10	49.9	119.7	13.9
110	10.8	35.9	30.4	0.85	4.08	49.9	119.3	15.1
110	11.8	36.0	30.5	0.85	4.06	49.8	118.5	17.5

Note: Cooling performance data is tabulated at 80.6°F DB/66.2°F WB entering air at ANSI/AHRI/ASHRAE/ISO13256-1 rated cfm. For ANSI/AHRI/ASHRAE/ISO13256-1 certified ratings, refer to the ANSI/AHRI/ASHRAE/ISO13256-1 WLHP, GWHP and GLHP performance table. See performance correction tables to correct performance at conditions other than those tabulated. Data shown is for unit performance only. Interpolation of data is permissible; extrapolation is not. Rated GPM: 9.3 Minimum cfm 960; Rated cfm 1200; Maximum cfm 1440.

Table 87. Heating capacities 3.5 tons (net) - GEHE042

EWT	GPM	Htg Cap Mbtuh	Absorb Mbtuh	Power kW	LWT	Feet Head
25	6.4	30.6	20.8	2.89	18.5	8.6
25	7.8	31.1	21.2	2.89	19.6	12.4
25	8.8	31.4	21.5	2.90	20.1	15.2
25	9.8	31.4	21.5	2.90	20.6	18.2
25	10.3	31.5	21.6	2.90	20.8	19.8
25	10.8	31.7	21.8	2.90	21.0	21.5
25	11.8	31.9	21.9	2.91	21.3	24.9
32	6.4	33.6	23.6	2.92	24.6	8.4

Table 87. Heating capacities 3.5 tons (net) - GEHE042 (continued)

EWT	GPM	Htg Cap Mbtuh	Absorb Mbtuh	Power kW	LWT	Feet Head
32	7.8	34.1	24.1	2.92	25.8	12.2
32	8.8	34.3	24.4	2.93	26.5	14.9
32	9.8	34.6	24.6	2.93	27.0	17.9
32	10.3	34.6	24.6	2.92	27.2	19.4
32	10.8	34.7	24.7	2.93	27.4	21.0
32	11.8	34.8	24.8	2.93	27.8	24.4
45	6.4	39.4	29.1	3.02	35.9	7.8
45	7.8	40.0	29.7	3.02	37.4	11.3
45	8.8	40.4	30.0	3.02	38.2	13.8
45	9.8	40.7	30.4	3.03	38.8	16.6
45	10.3	40.7	30.4	3.03	39.1	18.1
45	10.8	40.9	30.5	3.03	39.3	19.6
45	11.8	41.0	30.7	3.04	39.8	22.9
55	6.4	44.5	33.8	3.11	44.4	7.5
55	7.8	45.2	34.6	3.12	46.2	10.8
55	8.8	45.6	34.9	3.13	47.1	13.3
55	9.8	45.9	35.2	3.14	47.8	16.0
55	10.3	46.1	35.4	3.14	48.1	17.4
55	10.8	46.2	35.5	3.14	48.4	18.9
55	11.8	46.4	35.7	3.15	48.9	21.9
68	6.4	50.2	39.1	3.27	55.7	7.0
68	7.8	51.2	40.0	3.29	57.8	10.1
68	8.8	51.9	40.6	3.32	58.8	12.5
68	9.8	52.3	41.0	3.33	59.6	15.0
68	10.3	52.5	41.1	3.34	60.0	16.3
68	10.8	52.7	41.3	3.34	60.3	17.7
68	11.8	53.0	41.6	3.34	60.9	20.6
75	6.4	54.0	42.5	3.38	61.7	6.8
75	7.8	55.3	43.6	3.42	63.9	9.9
75	8.8	56.0	44.2	3.44	65.0	12.1
75	9.8	56.7	44.8	3.47	65.8	14.6
75	10.3	56.9	45.0	3.48	66.2	15.9
75	10.8	57.1	45.2	3.48	66.6	17.2
75	11.8	57.3	45.4	3.49	67.3	20.1
86	6.4	60.6	48.2	3.63	70.9	6.5
86	7.8	62.1	49.5	3.68	73.4	9.5
86	8.8	62.7	50.1	3.71	74.6	11.6
86	9.8	63.4	50.6	3.74	75.7	14.0
86	10.3	63.7	50.9	3.75	76.1	15.2
86	10.8	63.9	51.1	3.76	76.5	16.5

Table 87. Heating capacities 3.5 tons (net) - GEHE042 (continued)

EWT	GPM	Htg Cap Mbtuh	Absorb Mbtuh	Power kW	LWT	Feet Head
86	11.8	64.2	51.3	3.78	77.3	19.2

Note: Heating performance data is tabulated at 68°F DB entering air at ANSI/AHRI/ASHRAE/ISO13256-1 rated cfm. For ANSI/AHRI/ASHRAE/ISO13256-1 certified ratings, refer to the ANSI/AHRI/ASHRAE/ISO13256-1 WLHP, GWHP and GLHP performance table. See performance correction tables to correct performance at conditions other than those tabulated. Data shown is for unit performance only. Interpolation of data is permissible; extrapolation is not. Rated GPM: 9.3 Minimum cfm 960; Rated cfm 1200; Maximum cfm 1440.

Table 88. Fan correction factors 3.5 tons - GEHE042

Entering cfm	Cooling Capacity	Sensible Capacity	Cooling Input Watts	Heating Capacity	Heating Input Watts
1064	0.955	0.873	0.996	0.989	1.070
1131	0.968	0.906	0.997	0.992	1.049
1197	0.980	0.936	0.998	0.996	1.031
1264	0.991	0.969	0.999	0.998	1.014
1330	1.000	1.000	1.000	1.000	1.000
1463	1.017	1.063	1.002	1.003	0.972
1530	1.025	1.093	1.003	1.005	0.961
1596	1.033	1.120	1.004	1.005	0.950

Table 89. Correction factors for variation in entering air temperature 3.5 tons, GEHE042

Cooling Entering Air WB°F	Cooling Capacity	Cooling Input Watts	Sensible vs. Entering Dry Bulb Multipliers					Heating Entering Air DB°F	Heating Capacity	Heating Input Watts
			65.6	70.6	75.6	80.6	85.6			
49.4	0.926	0.997	0.970	1.037	1.105	*	*	53.0	1.024	0.867
56.3	0.927	0.997	0.795	1.008	1.107	*	*	58.0	1.013	0.906
60.3	0.928	0.997	0.601	0.832	1.051	*	*	63.0	1.009	0.952
63.2	0.954	0.997	0.459	0.688	0.919	1.136	*	68.0	1.000	1.000
66.2	1.000	1.000	—	0.538	0.769	1.000	1.216	73.0	0.990	1.047
72.1	1.098	1.009	—	—	0.467	0.699	0.931	78.0	0.983	1.099
77.1	1.176	0.999	—	—	—	0.382	0.629	83.0	0.975	1.154

Note: * = Sensible equals total capacity

Table 90. Cooling capacities 3.5 tons (gross) - GEVG042

EWT	GPM	Total Mbtuh	Sen Mbtuh	SHR	Comp Pwr kW	Reject Mbtuh	LWT	Feet Head
45	6.8	48.4	35.1	0.73	1.78	54.5	61.0	4.7
45	8.4	48.4	35.1	0.73	1.76	54.4	58.0	6.9
45	9.5	48.3	35.1	0.73	1.76	54.3	56.4	8.6
45	10.5	48.3	35.1	0.73	1.75	54.3	55.3	10.3
45	11.0	48.3	35.1	0.73	1.75	54.3	54.9	11.1
45	11.6	48.3	35.1	0.73	1.75	54.3	54.4	12.2
45	12.6	48.3	35.1	0.73	1.75	54.3	53.6	14.2
55	6.8	47.3	34.4	0.73	1.90	53.8	70.8	4.4
55	8.4	47.3	34.4	0.73	1.86	53.7	67.8	6.4
55	9.5	47.3	34.4	0.73	1.85	53.6	66.3	8.0
55	10.5	47.3	34.4	0.73	1.83	53.6	65.2	9.6
55	11.0	47.3	34.4	0.73	1.83	53.5	64.7	10.4
55	11.6	47.3	34.4	0.73	1.82	53.5	64.2	11.5

Table 90. Cooling capacities 3.5 tons (gross) - GEVG042 (continued)

EWT	GPM	Total Mbtuh	Sen Mbtuh	SHR	Comp Pwr kW	Reject Mbtuh	LWT	Feet Head
55	12.6	47.3	34.4	0.73	1.82	53.5	63.5	13.3
68	6.8	45.6	33.6	0.74	2.16	53.0	83.6	4.2
68	8.4	45.7	33.7	0.74	2.10	52.9	80.6	6.1
68	9.5	45.7	33.7	0.74	2.08	52.8	79.1	7.5
68	10.5	45.7	33.7	0.74	2.06	52.7	78.0	9.0
68	11.0	45.7	33.7	0.74	2.05	52.7	77.6	9.8
68	11.6	45.8	33.8	0.74	2.04	52.8	77.1	10.7
68	12.6	45.8	33.8	0.74	2.03	52.7	76.4	12.4
75	6.8	44.5	33.3	0.75	2.35	52.5	90.4	4.1
75	8.4	44.6	33.4	0.75	2.28	52.4	87.5	5.9
75	9.5	44.7	33.5	0.75	2.25	52.4	86.0	7.4
75	10.5	44.7	33.5	0.75	2.23	52.3	85.0	8.8
75	11.0	44.7	33.5	0.75	2.22	52.3	84.5	9.5
75	11.6	44.8	33.6	0.75	2.21	52.3	84.0	10.5
75	12.6	44.8	33.6	0.75	2.19	52.3	83.3	12.1
86	6.8	42.7	32.8	0.77	2.70	51.9	101.3	4.1
86	8.4	42.8	32.8	0.77	2.62	51.7	98.3	5.8
86	9.5	42.9	32.9	0.77	2.59	51.7	96.9	7.2
86	10.5	42.9	32.9	0.77	2.56	51.6	95.8	8.5
86	11.0	43.0	33.0	0.77	2.55	51.7	95.4	9.3
86	11.6	43.0	33.0	0.77	2.53	51.6	94.9	10.1
86	12.6	43.0	33.0	0.77	2.52	51.6	94.2	11.7
95	6.8	41.0	32.1	0.78	3.03	51.3	110.1	4.1
95	8.4	41.2	32.2	0.78	2.95	51.3	107.2	5.7
95	9.5	41.2	32.2	0.78	2.91	51.1	105.8	7.1
95	10.5	41.3	32.3	0.78	2.88	51.1	104.7	8.4
95	11.0	41.3	32.3	0.78	2.87	51.1	104.3	9.1
95	11.6	41.3	32.3	0.78	2.85	51.0	103.8	9.9
95	12.6	41.4	32.4	0.78	2.83	51.1	103.1	11.5
105	6.8	38.9	31.1	0.80	3.44	50.6	119.9	4.0
105	8.4	39.1	31.3	0.80	3.35	50.5	117.0	5.6
105	9.5	39.2	31.4	0.80	3.31	50.5	115.6	6.9
105	10.5	39.3	31.4	0.80	3.28	50.5	114.6	8.2
105	11.0	39.3	31.4	0.80	3.27	50.5	114.2	8.9
105	11.6	39.3	31.4	0.80	3.25	50.4	113.7	9.7
105	12.6	39.4	31.5	0.80	3.23	50.4	113.0	11.2
115	6.8	36.7	30.0	0.82	3.88	49.9	129.7	3.8
115	8.4	36.9	30.2	0.82	3.79	49.8	126.9	5.4
115	9.5	37.0	30.3	0.82	3.75	49.8	125.5	6.7
115	10.5	37.1	30.4	0.82	3.72	49.8	124.5	8.0
115	11.0	37.1	30.4	0.82	3.71	49.8	124.1	8.7

Table 90. Cooling capacities 3.5 tons (gross) - GEVG042 (continued)

EWT	GPM	Total Mbtuh	Sen Mbtuh	SHR	Comp Pwr kW	Reject Mbtuh	LWT	Feet Head
115	11.6	37.1	30.4	0.82	3.70	49.7	123.6	9.5
115	12.6	37.2	30.4	0.82	3.68	49.7	122.9	11.0

Note: Cooling performance data is tabulated at 80.6°F DB/66.2°F WB entering air at ANSI/AHRI/ASHRAE/ISO13256-1 rated cfm. For conditions other than what is tabulated, multipliers must be used to correct performance. See performance correction tables for fan correction factors for CFM other than rated and the cooling correction factors for variations in entering air temperature. Rated GPM 10.5; Minimum CFM 1064; Rated CFM 1330; Maximum CFM 1596.

Table 91. Heating capacities 3.5 tons (gross) - GEVG042

EWT	GPM	Htg Cap Mbtuh	Absorb Mbtuh	Comp Pwr kW	LWT	Feet Head
25	6.8	28.9	19.9	2.64	19.1	5.8
25	8.4	29.4	20.4	2.64	20.1	8.4
25	9.5	29.6	20.6	2.64	20.7	10.4
25	10.5	29.8	20.8	2.64	21.0	12.4
25	11.0	29.9	20.9	2.64	21.2	13.4
25	11.6	30.0	21.0	2.64	21.4	14.6
25	12.6	30.1	21.1	2.65	21.7	16.9
32	6.8	32.3	23.1	2.69	25.2	5.3
32	8.4	33.0	23.8	2.71	26.3	7.8
32	9.5	33.3	24.0	2.71	26.9	9.6
32	10.5	33.6	24.3	2.72	27.4	11.5
32	11.0	33.7	24.4	2.72	27.6	12.5
32	11.6	33.8	24.5	2.72	27.8	13.7
32	12.6	34.0	24.7	2.73	28.1	15.8
45	6.8	39.0	29.4	2.82	36.4	4.7
45	8.4	39.9	30.2	2.85	37.8	6.9
45	9.5	40.4	30.6	2.86	38.6	8.6
45	10.5	40.8	31.0	2.87	39.1	10.3
45	11.0	41.0	31.2	2.88	39.3	11.1
45	11.6	41.1	31.3	2.89	39.6	12.2
45	12.6	41.4	31.5	2.89	40.0	14.2
55	6.8	44.3	34.3	2.94	44.9	4.4
55	8.4	45.5	35.3	2.98	46.6	6.4
55	9.5	46.1	35.9	3.00	47.4	8.0
55	10.5	46.5	36.2	3.02	48.1	9.6
55	11.0	46.7	36.4	3.02	48.4	10.4
55	11.6	46.9	36.6	3.03	48.7	11.5
55	12.6	47.2	36.8	3.04	49.2	13.3
68	6.8	51.4	40.7	3.14	56.0	4.2
68	8.4	52.8	41.9	3.19	58.0	6.1
68	9.5	53.5	42.5	3.21	59.1	7.5
68	10.5	54.0	43.0	3.23	59.8	9.0
68	11.0	54.2	43.1	3.24	60.2	9.8
68	11.6	54.5	43.4	3.25	60.5	10.7
68	12.6	54.9	43.8	3.26	61.0	12.4

Table 91. Heating capacities 3.5 tons (gross) - GEVG042 (continued)

EWT	GPM	Htg Cap Mbtuh	Absorb Mbtuh	Comp Pwr kW	LWT	Feet Head
75	6.8	55.3	44.2	3.27	62.0	4.1
75	8.4	56.7	45.4	3.32	64.2	5.9
75	9.5	57.5	46.1	3.34	65.3	7.4
75	10.5	58.0	46.5	3.36	66.1	8.8
75	11.0	58.3	46.8	3.37	66.5	9.5
75	11.6	58.5	47.0	3.38	66.9	10.5
75	12.6	58.9	47.3	3.39	67.5	12.1
86	6.8	61.3	49.4	3.49	71.5	4.1
86	8.4	62.8	50.7	3.54	73.9	5.8
86	9.5	63.6	51.4	3.57	75.2	7.2
86	10.5	64.2	51.9	3.59	76.1	8.5
86	11.0	64.5	52.2	3.60	76.5	9.3
86	11.6	64.8	52.5	3.61	76.9	10.1
86	12.6	65.2	52.8	3.62	77.6	11.7

Note: Heating performance data is tabulated at 68.0°F DB at the ANSI/AHRI/ASHRAE/ISO13256-1 rated cfm. For conditions other than what is tabulated, multipliers must be used to correct performance. See performance correction tables for fan correction factors for CFM other than rated and the heating correction factors for variation in entering air temperatures. Rated GPM 10.5;Minimum CFM 1064; Rated CFM 1330; Maximum CFM 1596.

Table 92. Fan correction factors 3.5 tons - GEVG042

Entering cfm	Cooling Capacity	Sensible Capacity	Cooling Input Watts	Heating Capacity	Heating Input Watts
1064	0.960	0.897	0.993	0.985	1.098
1131	0.971	0.924	0.995	0.990	1.069
1197	0.981	0.950	0.997	0.993	1.044
1264	0.991	0.975	0.998	0.997	1.021
1330	1.000	1.000	1.000	1.000	1.000
1463	1.015	1.048	1.003	1.005	0.964
1530	1.023	1.072	1.004	1.007	0.949
1596	1.029	1.094	1.005	1.009	0.934

Table 93. Correction factors for variation in entering air temperature 3.5 tons, GEVG042

Cooling Entering Air WB°F	Cooling Capacity	Cooling Input Watts	Sensible vs. Entering Dry Bulb Multipliers					Heating Entering Air DB°F	Heating Capacity	Heating Input Watts
			65.6	70.6	75.6	80.6	85.6			
49.4	0.885	0.985	0.976	1.067	1.138	*	*	53.0	1.032	0.837
56.3	0.899	0.986	0.822	0.972	1.092	*	*	58.0	1.022	0.890
60.3	0.920	0.989	0.676	0.862	1.014	1.139	*	63.0	1.012	0.944
63.2	0.949	0.993	0.545	0.758	0.934	1.080	1.205	68.0	1.000	1.000
66.2	1.000	1.000	–	0.631	0.832	1.000	1.143	73.0	0.987	1.057
72.1	1.115	1.022	–	–	0.576	0.791	0.973	78.0	0.974	1.116
77.1	1.209	1.051	–	–	–	–	0.780	83.0	0.961	1.174

Note: * = Sensible equals total capacity

Cooling and Heating Capacities 4 tons

Table 94. Cooling capacities 4 tons (net) - GEHE048

EWT	GPM	Total Mbtuh	Sen Mbtuh	SHR	Power kW	Reject Mbtuh	LWT	Feet Head
45	7.3	56.7	40.8	0.72	2.58	65.5	63.0	4.7
45	9.0	57.2	41.2	0.72	2.47	65.7	59.7	6.8
45	10.1	57.5	41.4	0.72	2.42	65.8	58.0	8.4
45	11.2	57.7	41.6	0.72	2.38	65.8	56.8	10.1
45	11.8	57.8	41.6	0.72	2.36	65.8	56.2	11.0
45	12.3	57.9	41.7	0.72	2.34	65.9	55.7	12.0
45	13.4	58.1	41.8	0.72	2.31	66.0	54.8	14.0
55	7.3	54.8	40.0	0.73	2.92	64.8	72.8	4.6
55	9.0	55.4	40.4	0.73	2.81	65.0	69.5	6.6
55	10.1	55.5	40.6	0.73	2.76	65.0	67.9	8.1
55	11.2	55.8	40.7	0.73	2.72	65.0	66.6	9.8
55	11.8	55.9	40.8	0.73	2.70	65.1	66.1	10.6
55	12.3	56.0	40.9	0.73	2.69	65.1	65.6	11.6
55	13.4	56.1	40.9	0.73	2.66	65.1	64.7	13.5
68	7.3	52.5	39.4	0.75	3.32	63.9	85.5	4.4
68	9.0	53.1	39.8	0.75	3.22	64.1	82.3	6.3
68	10.1	53.3	40.0	0.75	3.18	64.1	80.7	7.8
68	11.2	53.5	40.1	0.75	3.13	64.2	79.5	9.4
68	11.8	53.6	40.2	0.75	3.11	64.2	78.9	10.2
68	12.3	53.7	40.2	0.75	3.09	64.2	78.4	11.1
68	13.4	53.8	40.4	0.75	3.07	64.3	77.6	12.9
75	7.3	51.0	38.9	0.76	3.58	63.2	92.4	4.3
75	9.0	51.6	39.3	0.76	3.47	63.4	89.2	6.2
75	10.1	51.8	39.5	0.76	3.43	63.5	87.6	7.6
75	11.2	52.0	39.7	0.76	3.39	63.5	86.3	9.1
75	11.8	52.1	39.7	0.76	3.37	63.6	85.8	10.0
75	12.3	52.1	39.8	0.76	3.35	63.6	85.3	10.8
75	13.4	52.3	39.9	0.76	3.33	63.6	84.5	12.6
86	7.3	48.3	37.8	0.78	3.99	61.9	103.0	4.2
86	9.0	48.8	38.1	0.78	3.87	62.0	99.8	6.0
86	10.1	49.1	38.3	0.78	3.82	62.1	98.3	7.4
86	11.2	49.3	38.5	0.78	3.78	62.2	97.1	8.9
86	11.8	49.4	38.6	0.78	3.76	62.2	96.6	9.7
86	12.3	49.4	38.6	0.78	3.75	62.2	96.1	10.5
86	13.4	49.6	38.7	0.78	3.72	62.2	95.3	12.2
95	7.3	46.1	36.8	0.80	4.38	61.0	111.8	4.0
95	9.0	46.6	37.2	0.80	4.26	61.1	108.6	5.8
95	10.1	46.8	37.4	0.80	4.21	61.2	107.1	7.1
95	11.2	47.0	37.6	0.80	4.17	61.2	105.9	8.6
95	11.8	47.1	37.6	0.80	4.15	61.2	105.4	9.3

Table 94. Cooling capacities 4 tons (net) - GEHE048 (continued)

EWT	GPM	Total Mbtuh	Sen Mbtuh	SHR	Power kW	Reject Mbtuh	LWT	Feet Head
95	12.3	47.2	37.7	0.80	4.13	61.3	105.0	10.1
95	13.4	47.3	37.8	0.80	4.10	61.3	104.1	11.8
105	7.3	43.3	35.9	0.83	4.87	60.0	121.5	3.9
105	9.0	43.8	36.3	0.83	4.75	60.1	118.4	5.6
105	10.1	44.1	36.5	0.83	4.69	60.1	116.9	6.9
105	11.2	44.3	36.6	0.83	4.64	60.1	115.7	8.3
105	11.8	44.3	36.7	0.83	4.62	60.1	115.2	9.1
105	12.3	44.4	36.8	0.83	4.61	60.1	114.8	9.8
105	13.4	44.6	36.9	0.83	4.58	60.2	114.0	11.5
110	7.3	41.9	35.3	0.84	5.14	59.4	126.3	3.8
110	9.0	42.4	35.7	0.84	5.01	59.5	123.3	5.5
110	10.1	42.6	35.9	0.84	4.95	59.5	121.8	6.8
110	11.2	42.8	36.1	0.84	4.91	59.6	120.6	8.2
110	11.8	42.9	36.1	0.84	4.89	59.6	120.1	8.9
110	12.3	43.0	36.2	0.84	4.87	59.6	119.7	9.7
110	13.4	42.4	35.8	0.84	4.90	59.2	118.8	11.3

Note: Cooling performance data is tabulated at 80.6°F DB/66.2°F WB entering air at ANSI/AHRI/ASHRAE/ISO13256-1 rated cfm. For ANSI/AHRI/ASHRAE/ISO13256-1 certified ratings, refer to the ANSI/AHRI/ASHRAE/ISO13256-1 WLHP, GWHP and GLHP performance table. See performance correction tables to correct performance at conditions other than those tabulated. Data shown is for unit performance only. Interpolation of data is permissible; extrapolation is not. Rated GPM: 11.2 Minimum cfm 1216; Rated cfm 1520; Maximum cfm 1824.

Table 95. Heating capacities 4 tons (net) - GEHE048

EWT	GPM	Htg Cap Mbtuh	Absorb Mbtuh	Power kW	LWT	Feet Head
25	7.3	35.7	24.4	3.31	18.3	5.1
25	9.0	36.4	25.0	3.32	19.4	7.3
25	10.1	36.6	25.3	3.32	20.0	9.1
25	11.2	36.9	25.5	3.32	20.4	10.9
25	11.8	37.1	25.7	3.33	20.6	11.9
25	12.3	37.3	25.9	3.33	20.8	13.0
25	13.4	37.3	26.0	3.33	21.1	15.1
32	7.3	39.1	27.7	3.35	24.4	5.0
32	9.0	39.8	28.3	3.37	25.7	7.2
32	10.1	40.3	28.8	3.38	26.3	8.9
32	11.2	40.8	29.2	3.39	26.8	10.7
32	11.8	40.8	29.2	3.38	27.0	11.7
32	12.3	41.0	29.4	3.39	27.2	12.7
32	13.4	41.1	29.6	3.39	27.6	14.8
45	7.3	45.9	34.0	3.48	35.7	4.7
45	9.0	46.8	34.9	3.50	37.2	6.8
45	10.1	47.1	35.2	3.50	38.0	8.4
45	11.2	47.6	35.6	3.51	38.6	10.1
45	11.8	47.7	35.7	3.51	38.9	11.0
45	12.3	47.9	35.9	3.52	39.2	12.0

Table 95. Heating capacities 4 tons (net) - GEHE048 (continued)

EWT	GPM	Htg Cap Mbtuh	Absorb Mbtuh	Power kW	LWT	Feet Head
45	13.4	48.1	36.1	3.52	39.6	14.0
55	7.3	51.6	39.4	3.58	44.2	4.6
55	9.0	52.7	40.4	3.60	46.0	6.6
55	10.1	53.4	41.0	3.61	46.9	8.1
55	11.2	53.6	41.3	3.62	47.6	9.8
55	11.8	53.9	41.6	3.62	47.9	10.6
55	12.3	54.1	41.7	3.62	48.2	11.6
55	13.4	54.4	42.0	3.63	48.7	13.5
68	7.3	57.5	44.9	3.72	55.7	4.4
68	9.0	59.0	46.2	3.74	57.7	6.3
68	10.1	59.8	46.9	3.76	58.7	7.8
68	11.2	60.5	47.7	3.78	59.5	9.4
68	11.8	60.8	47.9	3.77	59.8	10.2
68	12.3	61.1	48.2	3.79	60.2	11.1
68	13.4	61.3	48.4	3.78	60.8	12.9
75	7.3	61.8	48.8	3.79	61.6	4.3
75	9.0	63.5	50.4	3.82	63.7	6.2
75	10.1	64.3	51.2	3.84	64.8	7.6
75	11.2	64.9	51.8	3.85	65.8	9.1
75	11.8	65.2	52.0	3.85	66.1	10.0
75	12.3	65.5	52.3	3.86	66.5	10.8
75	13.4	66.1	52.8	3.87	67.1	12.6
86	7.3	68.9	55.5	3.93	70.8	4.2
86	9.0	70.6	57.0	3.96	73.3	6.0
86	10.1	71.6	58.0	3.99	74.5	7.4
86	11.2	72.2	58.6	3.98	75.5	8.9
86	11.8	72.5	58.9	3.99	76.0	9.7
86	12.3	72.9	59.2	4.00	76.4	10.5
86	13.4	73.5	59.8	4.01	77.1	12.2

Note: Heating performance data is tabulated at 68°F DB entering air at ANSI/AHRI/ASHRAE/ISO13256-1 rated cfm. For ANSI/AHRI/ASHRAE/ISO13256-1 certified ratings, refer to the ANSI/AHRI/ASHRAE/ISO13256-1 WLHP, GWHP and GLHP performance table. See performance correction tables to correct performance at conditions other than those tabulated. Data shown is for unit performance only. Interpolation of data is permissible; extrapolation is not. Rated GPM: 11.2 Minimum cfm 1216; Rated cfm 1520; Maximum cfm 1824.

Table 96. Fan correction factors 4 tons - GEHE048

Entering cfm	Cooling Capacity	Sensible Capacity	Cooling Input Watts	Heating Capacity	Heating Input Watts
1216	0.958	0.877	1.005	0.982	1.067
1292	0.970	0.908	1.004	0.986	1.046
1368	0.981	0.937	1.002	0.990	1.028
1444	0.991	0.969	1.001	0.996	1.014
1520	1.000	1.000	1.000	1.000	1.000
1672	1.016	1.060	0.999	1.007	0.974

Table 96. Fan correction factors 4 tons - GEHE048 (continued)

Entering cfm	Cooling Capacity	Sensible Capacity	Cooling Input Watts	Heating Capacity	Heating Input Watts
1748	1.023	1.088	0.999	1.004	0.961
1824	1.029	1.118	0.998	1.007	0.951

Table 97. Correction factors for variation in entering air temperature 4 tons, GEHE048

Cooling Entering Air WB°F	Cooling Capacity	Cooling Input Watts	Sensible vs. Entering Dry Bulb Multipliers					Heating Entering Air DB°F	Heating Capacity	Heating Input Watts
			65.6	70.6	75.6	80.6	85.6			
49.4	0.937	1.011	1.012	1.074	1.137	*	*	53.0	1.035	0.849
56.3	0.937	1.010	0.812	1.033	1.138	*	*	58.0	1.023	0.897
60.3	0.938	1.011	0.621	0.843	1.068	*	*	63.0	1.007	0.943
63.2	0.959	1.008	0.480	0.702	0.925	1.146	*	68.0	1.000	1.000
66.2	1.000	1.000	—	0.554	0.775	1.000	1.219	73.0	0.983	1.050
72.1	1.078	0.982	—	—	0.475	0.701	0.924	78.0	0.973	1.107
77.1	1.149	0.972	—	—	—	0.442	0.666	83.0	0.961	1.165

Note: * = Sensible equals total capacity

Table 98. Cooling capacities 4 tons (gross) - GEVG048

EWT	GPM	Total Mbtuh	Sen Mbtuh	SHR	Power kW	Reject Mbtuh	LWT	Feet Head
45	7.8	59.2	45.5	0.77	2.06	66.2	62.0	7.1
45	9.6	59.4	45.6	0.77	2.04	66.3	58.8	10.2
45	10.8	59.5	45.7	0.77	2.03	66.4	57.3	12.5
45	12.0	59.6	45.8	0.77	2.03	66.5	56.1	15.0
45	12.6	59.7	45.8	0.77	2.02	66.6	55.6	16.4
45	13.2	59.7	45.8	0.77	2.02	66.6	55.1	17.7
45	14.4	59.7	45.8	0.77	2.02	66.6	54.3	20.4
55	7.8	58.6	45.1	0.77	2.19	66.1	71.9	6.8
55	9.6	58.8	45.2	0.77	2.15	66.1	68.8	9.8
55	10.8	58.9	45.3	0.77	2.13	66.2	67.3	12.0
55	12.0	59.0	45.4	0.77	2.11	66.2	66.0	14.5
55	12.6	59.0	45.4	0.77	2.11	66.2	65.5	15.8
55	13.2	59.0	45.4	0.77	2.10	66.2	65.0	17.1
55	14.4	59.1	45.5	0.77	2.09	66.2	64.2	19.8
68	7.8	56.0	43.9	0.78	2.50	64.5	84.5	6.6
68	9.6	56.2	44.1	0.78	2.44	64.5	81.4	9.5
68	10.8	56.3	44.2	0.79	2.41	64.5	79.9	11.7
68	12.0	56.4	44.3	0.79	2.38	64.5	78.8	14.1
68	12.6	56.4	44.3	0.79	2.37	64.5	78.2	15.4
68	13.2	56.4	44.3	0.79	2.36	64.5	77.8	16.7
68	14.4	56.5	44.3	0.78	2.35	64.5	77.0	19.3
75	7.8	54.2	43.2	0.80	2.72	63.5	91.3	6.5
75	9.6	54.4	43.3	0.80	2.65	63.4	88.2	9.4
75	10.8	54.5	43.4	0.80	2.62	63.4	86.7	11.6
75	12.0	54.6	43.5	0.80	2.59	63.4	85.6	14.0

Table 98. Cooling capacities 4 tons (gross) - GEVG048 (continued)

EWT	GPM	Total Mbtuh	Sen Mbtuh	SHR	Power kW	Reject Mbtuh	LWT	Feet Head
75	12.6	54.6	43.5	0.80	2.58	63.4	85.1	15.2
75	13.2	54.6	43.5	0.80	2.57	63.4	84.6	16.5
75	14.4	54.7	43.6	0.80	2.55	63.4	83.8	19.1
86	7.8	51.3	41.9	0.82	3.14	62.0	101.9	6.4
86	9.6	51.5	42.1	0.82	3.06	61.9	98.9	9.3
86	10.8	51.6	42.2	0.82	3.02	61.9	97.5	11.4
86	12.0	51.6	42.2	0.82	2.98	61.8	96.3	13.8
86	12.6	51.7	42.3	0.82	2.97	61.8	95.8	15.0
86	13.2	51.7	42.3	0.82	2.96	61.8	95.4	16.3
86	14.4	51.8	42.3	0.82	2.93	61.8	94.6	18.9
95	7.8	49.0	41.0	0.84	3.53	61.0	110.6	6.4
95	9.6	49.2	41.1	0.84	3.44	60.9	107.7	9.2
95	10.8	49.2	41.1	0.84	3.39	60.8	106.3	11.3
95	12.0	49.3	41.2	0.84	3.36	60.7	105.1	13.7
95	12.6	49.4	41.3	0.84	3.34	60.8	104.7	14.9
95	13.2	49.4	41.3	0.84	3.33	60.7	104.2	16.2
95	14.4	49.4	41.3	0.84	3.30	60.7	103.4	18.7
105	7.8	46.4	39.8	0.86	3.99	60.0	120.4	6.3
105	9.6	46.6	40.0	0.86	3.89	59.9	117.5	9.2
105	10.8	46.7	40.1	0.86	3.85	59.8	116.1	11.3
105	12.0	46.8	40.2	0.86	3.81	59.8	115.0	13.6
105	12.6	46.9	40.2	0.86	3.79	59.8	114.5	14.8
105	13.2	46.9	40.2	0.86	3.78	59.8	114.1	16.1
105	14.4	46.9	40.2	0.86	3.76	59.7	113.3	18.6
115	7.8	43.6	38.6	0.89	4.47	58.9	130.1	6.3
115	9.6	43.8	38.8	0.89	4.38	58.7	127.2	9.1
115	10.8	43.9	38.8	0.88	4.33	58.7	125.9	11.2
115	12.0	44.0	38.9	0.88	4.29	58.6	124.8	13.5
115	12.6	44.1	39.0	0.88	4.27	58.7	124.3	14.8
115	13.2	44.1	39.0	0.88	4.26	58.6	123.9	16.0
115	14.4	44.1	39.0	0.88	4.24	58.6	123.1	18.6

Note: Cooling performance data is tabulated at 80.6°F DB/66.2°F WB entering air at ANSI/AHRI/ASHRAE/ISO13256-1 rated cfm. For ANSI/AHRI/ASHRAE/ISO13256-1 certified ratings, refer to the ANSI/AHRI/ASHRAE/ISO13256-1 WLHP, GWHP and GLHP performance table. See performance correction tables to correct performance at conditions other than those tabulated. Data shown is for unit performance only. Interpolation of data is permissible; extrapolation is not. Rated GPM: 12 Minimum cfm 1216; Rated cfm 1520; Maximum cfm 1824.

Table 99. Heating capacities 4 tons (gross) - GEVG048

EWT	GPM	Htg Cap Mbtuh	Absorb Mbtuh	Power kW	LWT	Feet Head
25	7.8	30.50	20.6	2.90	19.7	8.2
25	9.6	30.90	21.0	2.91	20.6	11.8
25	10.8	31.10	21.1	2.92	21.1	14.4
25	12	31.40	21.4	2.92	21.4	17.4

Table 99. Heating capacities 4 tons (gross) - GEVG048 (continued)

EWT	GPM	Htg Cap Mbtuh	Absorb Mbtuh	Power kW	LWT	Feet Head
25	12.6	31.60	21.6	2.92	21.6	18.9
25	13.2	31.70	21.7	2.93	21.7	20.4
25	14.4	32.00	22.0	2.93	21.9	23.4
32	7.8	33.90	23.8	2.97	25.9	7.8
32	9.6	34.40	24.2	2.99	27.0	11.1
32	10.8	34.80	24.6	3.00	27.4	13.5
32	12	35.10	24.9	3.00	27.9	16.3
32	12.6	35.30	25.0	3.01	28.0	17.7
32	13.2	35.40	25.1	3.01	28.2	19.1
32	14.4	35.70	25.4	3.02	28.5	22.0
45	7.8	43.30	32.6	3.13	36.6	7.1
45	9.6	44.10	33.3	3.16	38.1	10.2
45	10.8	44.60	33.8	3.17	38.7	12.5
45	12	45.00	34.2	3.18	39.3	15.0
45	12.6	45.20	34.3	3.18	39.6	16.4
45	13.2	45.40	34.5	3.19	39.8	17.7
45	14.4	45.80	34.9	3.20	40.2	20.4
55	7.8	50.7	39.5	3.27	44.9	6.8
55	9.6	51.8	40.5	3.30	46.6	9.8
55	10.8	52.4	41.1	3.32	47.4	12.0
55	12	52.9	41.5	3.33	48.1	14.5
55	12.6	53.1	41.7	3.33	48.4	15.8
55	13.2	53.3	41.9	3.34	48.7	17.1
55	14.4	53.7	42.3	3.35	49.1	19.8
68	7.8	59.7	47.9	3.46	55.7	6.6
68	9.6	61.0	49.1	3.50	57.8	9.5
68	10.8	61.7	49.7	3.52	58.8	11.7
68	12	62.3	50.3	3.53	59.6	14.1
68	12.6	62.6	50.5	3.54	60.0	15.4
68	13.2	62.8	50.7	3.54	60.3	16.7
68	14.4	63.3	51.2	3.55	60.9	19.3
75	7.8	64.1	51.9	3.57	61.7	6.5
75	9.6	65.6	53.3	3.61	63.9	9.4
75	10.8	66.3	53.9	3.63	65.0	11.6
75	12	67.0	54.6	3.64	65.9	14.0
75	12.6	67.3	54.8	3.65	66.3	15.2
75	13.2	67.5	55.0	3.66	66.7	16.5
75	14.4	68.0	55.5	3.67	67.3	19.1
86	7.8	70.4	57.6	3.74	71.2	6.4
86	9.6	72.1	59.2	3.78	73.7	9.3
86	10.8	72.9	59.9	3.80	74.9	11.4

Table 99. Heating capacities 4 tons (gross) - GEVG048 (continued)

EWT	GPM	Htg Cap Mbtuh	Absorb Mbtuh	Power kW	LWT	Feet Head
86	12	73.6	60.6	3.82	75.9	13.8
86	12.6	73.9	60.8	3.83	76.3	15.0
86	13.2	74.2	61.1	3.84	76.7	16.3
86	14.4	74.8	61.7	3.85	77.4	18.9

Note: Heating performance data is tabulated at 68°F DB entering air at ANSI/AHRI/ASHRAE/ISO13256-1 rated cfm. For ANSI/AHRI/ASHRAE/ISO13256-1 certified ratings, refer to the ANSI/AHRI/ASHRAE/ISO13256-1 WLHP, GWHP and GLHP performance table. See performance correction tables to correct performance at conditions other than those tabulated. Data shown is for unit performance only. Interpolation of data is permissible; extrapolation is not. Rated GPM: 12.0 Minimum cfm 1216; Rated cfm 1520; Maximum cfm 1824.

Table 100. Fan correction factors 4 tons - GEVG048

Entering cfm	Cooling Capacity	Sensible Capacity	Cooling Input Watts	Heating Capacity	Heating Input Watts
1216	0.960	0.876	0.999	0.979	1.093
1292	0.972	0.907	0.999	0.986	1.066
1368	0.982	0.938	0.999	0.991	1.041
1444	0.991	0.969	1.000	0.996	1.020
1520	1.000	1.000	1.000	1.000	1.000
1672	1.015	1.060	1.001	1.007	0.967
1748	1.022	1.089	1.001	1.010	0.953
1824	1.028	1.119	1.001	1.013	0.939

Table 101. Correction factors for variation in entering air temperature 4 tons, GEVG048

Cooling Entering Air WB°F	Cooling Capacity	Cooling Input Watts	Sensible vs. Entering Dry Bulb Multipliers					Heating Entering Air DB°F	Heating Capacity	Heating Input Watts
			65.6	70.6	75.6	80.6	85.6			
49.4	0.880	0.997	0.952	1.031	1.093	*	*	53.0	1.037	0.849
56.3	0.880	0.997	0.816	0.959	1.067	*	*	58.0	1.026	0.898
60.3	0.907	0.998	0.669	0.858	1.004	1.118	*	63.0	1.013	0.947
63.2	0.954	0.999	0.528	0.755	0.932	1.070	*	68.0	1.000	1.000
66.2	1.000	1.000	–	0.622	0.833	1.000	1.135	73.0	0.986	1.055
72.1	1.110	1.005	–	–	0.565	0.794	0.981	78.0	0.972	1.113
77.1	1.201	1.011	–	–	–	–	0.786	83.0	0.957	1.174

Note: * = Sensible equals total capacity

Cooling and Heating Capacities 5 tons

Table 102. Cooling capacity 5 tons (net) - GEHE060

EWT	GPM	Total Mbtuh	Sen Mbtuh	SHR	Power kW	Reject Mbtuh	LWT	Feet Head
45	9.1	69.0	48.1	0.70	3.47	80.8	62.8	7.3
45	11.2	69.3	48.3	0.70	3.38	80.9	59.4	10.6
45	12.6	69.5	48.5	0.70	3.33	80.9	57.8	13.0
45	14.0	69.6	48.5	0.70	3.30	80.9	56.6	15.7
45	14.7	69.7	48.6	0.70	3.29	80.9	56.0	17.1
45	15.4	69.7	48.6	0.70	3.27	80.9	55.5	9.3
45	16.8	69.8	48.7	0.70	3.25	80.9	54.6	10.8
55	9.1	65.9	46.9	0.71	3.76	78.7	72.3	7.1

Table 102. Cooling capacity 5 tons (net) - GEHE060 (continued)

EWT	GPM	Total Mbtuh	Sen Mbtuh	SHR	Power kW	Reject Mbtuh	LWT	Feet Head
55	11.2	66.2	47.2	0.71	3.66	78.7	69.1	10.2
55	12.6	66.5	47.3	0.71	3.62	78.8	67.5	12.6
55	14.0	66.6	47.4	0.71	3.58	78.8	66.3	15.1
55	14.7	66.7	47.5	0.71	3.56	78.8	65.7	16.5
55	15.4	66.7	47.5	0.71	3.55	78.8	65.2	17.9
55	16.8	66.8	47.6	0.71	3.52	78.8	64.4	20.8
68	9.1	63.6	46.7	0.73	4.18	77.9	85.1	6.8
68	11.2	64.0	47.0	0.73	4.08	77.9	81.9	9.9
68	12.6	64.2	47.1	0.73	4.03	77.9	80.4	12.1
68	14.0	64.3	47.2	0.73	4.00	78.0	79.1	14.6
68	14.7	64.4	47.3	0.73	3.98	77.9	78.6	15.9
68	15.4	64.4	47.3	0.73	3.96	77.9	78.1	17.3
68	16.8	64.5	47.4	0.73	3.94	78.0	77.3	20.1
75	9.1	61.9	46.0	0.74	4.46	77.1	91.9	6.7
75	11.2	62.3	46.3	0.74	4.36	77.1	88.8	9.6
75	12.6	62.4	46.4	0.74	4.31	77.1	87.2	11.9
75	14.0	62.5	46.5	0.74	4.27	77.1	86.0	14.3
75	14.7	62.6	46.5	0.74	4.25	77.1	85.5	15.6
75	15.4	62.6	46.6	0.74	4.24	77.1	85.0	16.9
75	16.8	62.7	46.6	0.74	4.21	77.1	84.2	19.7
86	9.1	59.0	44.9	0.76	4.94	75.8	102.7	6.5
86	11.2	59.3	45.2	0.76	4.83	75.8	99.5	9.3
86	12.6	59.5	45.3	0.76	4.77	75.8	98.0	11.5
86	14.0	59.6	45.4	0.76	4.72	75.7	96.8	13.9
86	14.7	59.7	45.5	0.76	4.70	75.7	96.3	15.1
86	15.4	59.7	45.5	0.76	4.68	75.7	95.8	16.4
86	16.8	59.8	45.6	0.76	4.65	75.7	95.0	19.1
95	9.1	56.4	44.0	0.78	5.39	74.8	111.4	6.2
95	11.2	56.7	44.3	0.78	5.26	74.7	108.3	9.0
95	12.6	56.9	44.4	0.78	5.21	74.6	106.8	11.1
95	14.0	57.0	44.5	0.78	5.16	74.6	105.7	13.4
95	14.7	57.0	44.6	0.78	5.14	74.6	105.1	14.6
95	15.4	57.0	44.6	0.78	5.12	74.5	104.7	15.8
95	16.8	57.2	44.7	0.78	5.09	74.6	103.9	18.4
105	9.1	53.2	42.6	0.80	5.95	73.5	121.1	0.0
105	11.2	53.5	42.9	0.80	5.82	73.4	118.1	0.0
105	12.6	53.7	43.1	0.80	5.76	73.3	116.6	10.8
105	14.0	53.8	43.2	0.80	5.71	73.3	115.5	13.0
105	14.7	53.9	43.2	0.80	5.69	73.3	115.0	14.2
105	15.4	53.9	43.2	0.80	5.67	73.3	114.5	15.4
105	16.8	54.0	43.3	0.80	5.64	73.2	113.7	17.9

Table 102. Cooling capacity 5 tons (net) - GEHE060 (continued)

EWT	GPM	Total Mbtuh	Sen Mbtuh	SHR	Power kW	Reject Mbtuh	LWT	Feet Head
110	9.1	51.5	42.0	0.82	6.27	72.8	126.0	6.0
110	11.2	51.9	42.4	0.82	6.13	72.8	123.0	0.0
110	12.6	52.0	42.5	0.82	6.07	72.7	121.5	10.6
110	14.0	52.1	42.6	0.82	6.01	72.6	120.4	12.8
110	14.7	52.2	42.6	0.82	5.99	72.6	119.9	14.0
110	15.4	52.2	42.6	0.82	5.97	72.6	119.4	15.2
110	16.8	52.5	42.9	0.82	5.94	72.7	118.7	17.7

Note: Cooling performance data is tabulated at 80.6°F DB/66.2°F WB entering air at ANSI/AHRI/ASHRAE/ISO13256-1 rated cfm. For ANSI/AHRI/ASHRAE/ISO13256-1 certified ratings, refer to the ANSI/AHRI/ASHRAE/ISO13256-1 WLHP, GWHP and GLHP performance table. See performance correction tables to correct performance at conditions other than those tabulated. Data shown is for unit performance only. Interpolation of data is permissible; extrapolation is not. Rated GPM: 14.0 Minimum cfm 1520; Rated cfm 1900; Maximum cfm 2280.

Table 103. Heating capacities 5 tons (net) - GEHE060

EWT	GPM	Htg Cap Mbtuh	Absorb Mbtuh	Power kW	LWT	Feet Head
25	9.1	43.7	29.2	4.26	18.6	7.9
25	11.2	44.5	29.9	4.28	19.7	11.5
25	12.6	44.7	30.1	4.28	20.2	14.1
25	14.0	45.1	30.4	4.30	20.7	16.8
25	14.7	45.0	30.4	4.29	20.9	18.2
25	15.4	45.2	30.5	4.29	21.0	19.7
25	16.8	45.4	30.8	4.30	21.3	22.7
32	9.1	47.9	33.1	4.33	24.7	7.8
32	11.2	48.8	34.0	4.36	25.9	11.2
32	12.6	49.1	34.2	4.36	26.6	13.8
32	14.0	49.3	34.5	4.36	27.1	16.5
32	14.7	49.5	34.6	4.36	27.3	17.9
32	15.4	49.7	34.8	4.37	27.5	19.4
32	16.8	50.1	35.1	4.38	27.8	22.3
45	9.1	55.2	39.9	4.47	36.2	7.3
45	11.2	56.1	40.8	4.48	37.7	10.6
45	12.6	56.4	41.1	4.49	38.5	13.0
45	14.0	56.8	41.4	4.49	39.1	15.7
45	14.7	57.0	41.6	4.50	39.3	17.1
45	15.4	57.1	41.7	4.51	39.6	9.3
45	16.8	57.4	42.0	4.51	40.0	10.8
55	9.1	62.0	46.3	4.60	44.8	7.1
55	11.2	63.2	47.4	4.63	46.5	10.2
55	12.6	63.5	47.7	4.63	47.4	12.6
55	14.0	63.9	48.1	4.63	48.1	15.1
55	14.7	64.2	48.3	4.64	48.4	16.5
55	15.4	64.3	48.5	4.65	48.7	17.9
55	16.8	64.6	48.7	4.65	49.2	20.8
68	9.1	70.8	54.3	4.83	56.1	6.8

Table 103. Heating capacities 5 tons (net) - GEHE060 (continued)

EWT	GPM	Htg Cap Mbtuh	Absorb Mbtuh	Power kW	LWT	Feet Head
68	11.2	72.3	55.8	4.86	58.0	9.9
68	12.6	73.1	56.4	4.87	59.0	12.1
68	14.0	73.6	57.0	4.89	59.9	14.6
68	14.7	73.8	57.1	4.89	60.2	15.9
68	15.4	74.0	57.3	4.89	60.6	17.3
68	16.8	74.6	57.8	4.91	61.1	20.1
75	9.1	76.2	59.3	4.96	62.0	6.7
75	11.2	77.9	60.9	4.99	64.1	9.6
75	12.6	78.7	61.6	5.01	65.2	11.9
75	14.0	79.2	62.1	5.02	66.1	14.3
75	14.7	79.5	62.3	5.02	66.5	15.6
75	15.4	79.8	62.6	5.03	66.9	16.9
75	16.8	80.2	63.0	5.04	67.5	19.7
86	9.1	84.7	67.0	5.17	71.3	6.5
86	11.2	87.1	69.3	5.24	73.6	9.3
86	12.6	87.8	69.9	5.25	74.9	11.5
86	14.0	89.0	70.9	5.29	75.9	13.9
86	14.7	89.2	71.1	5.29	76.3	15.1
86	15.4	89.5	71.4	5.30	76.7	16.4
86	16.8	90.0	71.9	5.32	77.4	19.1

Note: Heating performance data is tabulated at 68°F DB entering air at ANSI/AHRI/ASHRAE/ISO13256-1 rated cfm. For ANSI/AHRI/ASHRAE/ISO13256-1 certified ratings, refer to the ANSI/AHRI/ASHRAE/ISO13256-1 WLHP, GWHP and GLHP performance table. See performance correction tables to correct performance at conditions other than those tabulated. Data shown is for unit performance only. Interpolation of data is permissible; extrapolation is not. Rated GPM: 14.0 Minimum cfm 1520; Rated cfm 1900; Maximum cfm 2280.

Table 104. Fan correction factors 5 tons - GEHE060

Entering cfm	Cooling Capacity	Sensible Capacity	Cooling Input Watts	Heating Capacity	Heating Input Watts
1520	0.955	0.876	1.001	0.986	1.061
1615	0.968	0.908	1.002	0.989	1.042
1710	0.979	0.937	1.002	0.993	1.026
1805	0.990	0.969	1.000	0.996	1.012
1900	1.000	1.000	1.000	1.000	1.000
2090	1.018	1.059	1.001	1.003	0.978
2185	1.026	1.089	1.001	1.010	0.970
2280	1.033	1.116	1.001	1.007	0.958

Table 105. Correction factors for variation in entering air temperature 5 tons, GEHE060

Cooling Entering Air WB°F	Cooling Capacity	Cooling Input Watts	Sensible vs. Entering Dry Bulb Multipliers					Heating Entering Air DB°F	Heating Capacity	Heating Input Watts
			65.6	70.6	75.6	80.6	85.6			
49.4	0.890	0.992	0.906	0.966	1.010	*	*	53.0	1.034	0.849
56.3	0.900	0.990	0.810	0.947	1.037	*	*	58.0	1.024	0.897
60.3	0.912	0.992	0.662	0.861	1.001	1.098	*	63.0	1.012	0.948
63.2	0.951	0.995	0.506	0.755	0.936	1.065	*	68.0	1.000	1.000
66.2	1.000	1.000	–	0.609	0.834	1.000	1.124	73.0	0.987	1.054

Table 105. Correction factors for variation in entering air temperature 5 tons, GEHE060 (continued)

Cooling Entering Air WB°F	Cooling Capacity	Cooling Input Watts	Sensible vs. Entering Dry Bulb Multipliers					Heating Entering Air DB°F	Heating Capacity	Heating Input Watts
			65.6	70.6	75.6	80.6	85.6			
72.1	1.115	1.015	–	–	0.543	0.787	0.974	78.0	0.973	1.111
77.1	1.210	1.033	–	–	–	–	0.776	83.0	0.959	1.168

Note: * = Sensible equals total capacity

Table 106. Cooling capacity 5 tons (gross) - GEVG060

EWT	GPM	Total Mbtuh	Sen Mbtuh	SHR	Comp Pwr kW	Reject Mbtuh	LWT	Feet Head
45	9.8	66.0	53.4	0.81	2.47	74.4	60.2	6.0
45	12.0	66.2	53.5	0.81	2.39	74.4	57.4	8.7
45	13.5	66.3	53.6	0.81	2.35	74.3	56.0	10.8
45	15.0	66.4	53.7	0.81	2.32	74.3	54.9	13.0
45	15.8	66.4	53.7	0.81	2.31	74.3	54.4	14.3
45	16.5	66.5	53.8	0.81	2.30	74.3	54.0	15.4
45	18.0	66.5	53.8	0.81	2.27	74.2	53.2	18.0
55	9.8	65.0	52.7	0.81	2.59	73.8	70.1	6.0
55	12.0	65.2	52.9	0.81	2.51	73.8	67.3	8.6
55	13.5	65.3	53.0	0.81	2.47	73.7	65.9	10.6
55	15.0	65.4	53.0	0.81	2.44	73.7	64.8	12.8
55	15.8	65.5	53.1	0.81	2.43	73.8	64.3	14.0
55	16.5	65.5	53.1	0.81	2.41	73.7	63.9	15.1
55	18.0	65.6	53.2	0.81	2.39	73.8	63.2	17.6
68	9.8	62.2	51.6	0.83	2.90	72.1	82.7	6.0
68	12.0	62.5	51.8	0.83	2.83	72.1	80.0	8.5
68	13.5	62.5	51.8	0.83	2.79	72.0	78.7	10.5
68	15.0	62.6	51.9	0.83	2.76	72.0	77.6	12.6
68	15.8	62.7	52.0	0.83	2.74	72.1	77.1	13.8
68	16.5	62.7	52.0	0.83	2.73	72.0	76.7	14.9
68	18.0	62.8	52.1	0.83	2.71	72.0	76.0	17.3
75	9.8	60.4	50.9	0.84	3.15	71.1	89.5	6.0
75	12.0	60.6	51.1	0.84	3.07	71.1	86.9	8.5
75	13.5	60.7	51.1	0.84	3.03	71.0	85.5	10.4
75	15.0	60.8	51.2	0.84	3.00	71.0	84.5	12.5
75	15.8	60.9	51.3	0.84	2.99	71.1	84.0	13.7
75	16.5	60.9	51.3	0.84	2.98	71.1	83.6	14.8
75	18.0	61.0	51.4	0.84	2.95	71.1	82.9	17.2
86	9.8	57.5	49.6	0.86	3.60	69.8	100.2	6.0
86	12.0	57.7	49.8	0.86	3.52	69.7	97.6	8.5
86	13.5	57.8	49.9	0.86	3.49	69.7	96.3	10.4
86	15.0	57.9	50.0	0.86	3.46	69.7	95.3	12.4
86	15.8	57.9	50.0	0.86	3.44	69.6	94.8	13.6
86	16.5	58.0	50.1	0.86	3.43	69.7	94.4	14.7

Table 106. Cooling capacity 5 tons (gross) - GEVG060 (continued)

EWT	GPM	Total Mbtuh	Sen Mbtuh	SHR	Comp Pwr kW	Reject Mbtuh	LWT	Feet Head
86	18.0	58.0	50.1	0.86	3.40	69.6	93.7	17.1
95	9.8	55.0	48.5	0.88	4.02	68.7	109.0	5.9
95	12.0	55.2	48.7	0.88	3.94	68.7	106.5	8.4
95	13.5	55.3	48.8	0.88	3.91	68.6	105.2	10.3
95	15.0	55.4	48.8	0.88	3.88	68.6	104.1	12.4
95	15.8	55.5	48.9	0.88	3.86	68.7	103.7	13.5
95	16.5	55.5	48.9	0.88	3.85	68.6	103.3	14.6
95	18.0	55.6	49.0	0.88	3.82	68.6	102.6	17.0
105	9.8	52.2	47.2	0.90	4.53	67.7	118.8	5.8
105	12.0	52.4	47.4	0.90	4.45	67.6	116.3	8.3
105	13.5	52.5	47.4	0.90	4.41	67.6	115.0	10.2
105	15.0	52.6	47.5	0.90	4.39	67.6	114.0	12.3
105	15.8	52.6	47.5	0.90	4.37	67.5	113.5	13.4
105	16.5	52.7	47.6	0.90	4.36	67.6	113.2	14.5
105	18.0	52.7	47.6	0.90	4.33	67.5	112.5	16.9
115	9.8	48.9	45.7	0.93	5.09	66.3	128.5	5.7
115	12.0	49.1	45.9	0.93	5.01	66.2	126.0	8.2
115	13.5	49.2	46.0	0.93	4.97	66.2	124.8	10.1
115	15.0	49.3	46.1	0.94	4.94	66.2	123.8	12.2
115	15.8	49.4	46.2	0.94	4.92	66.2	123.4	13.3
115	16.5	49.4	46.2	0.94	4.91	66.2	123.0	14.4
115	18.0	49.5	46.3	0.94	4.89	66.2	122.4	16.8

Note: Cooling performance data is tabulated at 80.6°F DB/66.2°F WB entering air at ANSI/AHRI/ASHRAE/ISO13256-1 rated cfm. For conditions other than what is tabulated, multipliers must be used to correct performance. See performance correction tables for fan correction factors for CFM other than rated and the cooling correction factors for variations in entering air temperature. Rated GPM 15; Minimum CFM 1520; Rated CFM 1900; Maximum CFM 2280.

Table 107. Heating capacities 5 tons (gross) - GEVG060

EWT	GPM	Htg Cap Mbtuh	Absorb Mbtuh	Comp Pwr kW	LWT	Feet Head
25	9.8	38.1	26.6	3.36	19.6	6.8
25	12.0	38.8	27.3	3.38	20.5	10.0
25	13.5	39.0	27.5	3.38	20.9	12.3
25	15.0	39.2	27.7	3.38	21.3	14.9
25	15.8	39.4	27.9	3.38	21.5	16.3
25	16.5	39.5	28.0	3.39	21.6	17.5
25	18.0	39.8	28.2	3.39	21.9	20.3
32	9.8	42.2	30.5	3.44	25.8	6.3
32	12.0	43.0	31.2	3.46	26.8	9.2
32	13.5	43.4	31.6	3.47	27.3	11.5
32	15.0	43.7	31.8	3.47	27.8	13.8
32	15.8	43.9	32.0	3.48	27.9	15.2
32	16.5	44.0	32.1	3.48	28.1	16.4
32	18.0	44.4	32.5	3.49	28.4	19.0
45	9.8	52.4	39.8	3.70	36.9	6.0

Table 107. Heating capacities 5 tons (gross) - GEVG060 (continued)

EWT	GPM	Htg Cap Mbtuh	Absorb Mbtuh	Comp Pwr kW	LWT	Feet Head
45	12.0	53.5	40.8	3.73	38.2	8.7
45	13.5	54.1	41.3	3.75	38.9	10.8
45	15.0	54.6	41.8	3.76	39.4	13.0
45	15.8	54.8	41.9	3.77	39.7	14.3
45	16.5	55.0	42.1	3.78	39.9	15.4
45	18.0	55.6	42.7	3.79	40.3	18.0
55	9.8	60.6	47.2	3.93	45.4	6.0
55	12.0	62.0	48.5	3.97	46.9	8.6
55	13.5	62.6	49.0	3.98	47.7	10.6
55	15.0	63.2	49.5	4.00	48.4	12.8
55	15.8	63.5	49.8	4.01	48.7	14.0
55	16.5	63.8	50.1	4.02	48.9	15.1
55	18.0	64.4	50.6	4.04	49.4	17.6
68	9.8	71.0	56.6	4.21	56.4	6.0
68	12.0	72.5	58.0	4.25	58.3	8.5
68	13.5	73.3	58.7	4.27	59.3	10.5
68	15.0	74.1	59.5	4.29	60.1	12.6
68	15.8	74.4	59.7	4.30	60.4	13.8
68	16.5	74.7	60.0	4.31	60.7	14.9
68	18.0	75.5	60.7	4.33	61.3	17.3
75	9.8	76.2	61.4	4.35	62.5	6.0
75	12.0	77.9	62.9	4.39	64.5	8.5
75	13.5	78.8	63.7	4.41	65.6	10.4
75	15.0	79.6	64.5	4.43	66.4	12.5
75	15.8	80.0	64.8	4.44	66.8	13.7
75	16.5	80.3	65.1	4.45	67.1	14.8
75	18.0	81.1	65.8	4.47	67.7	17.2
86	9.8	84.1	68.6	4.55	72.0	6.0
86	12.0	85.9	70.2	4.60	74.3	8.5
86	13.5	86.9	71.1	4.62	75.5	10.4
86	15.0	87.7	71.9	4.64	76.4	12.4
86	15.8	88.2	72.3	4.65	76.8	13.6
86	16.5	88.6	72.7	4.66	77.2	14.7
86	18.0	89.4	73.4	4.68	77.8	17.1

Note: Heating performance data is tabulated at 68.0°F DB at the ANSI/AHRI/ASHRAE/ISO13256-1 rated cfm. For conditions other than what is tabulated, multipliers must be used to correct performance. See performance correction tables for fan correction factors for CFM other than rated and the heating correction factors for variation in entering air temperatures. Rated GPM 15;Minimum CFM 1520; Rated CFM 1900; Maximum CFM 2280.

Table 108. Fan correction factors 5 tons - GEVG060

Entering cfm	Cooling Capacity	Sensible Capacity	Cooling Input Watts	Heating Capacity	Heating Input Watts
1520	0.961	0.869	0.995	0.984	1.090
1615	0.972	0.902	0.997	0.989	1.064
1710	0.982	0.933	0.998	0.993	1.040

Table 108. Fan correction factors 5 tons - GEVG060 (continued)

Entering cfm	Cooling Capacity	Sensible Capacity	Cooling Input Watts	Heating Capacity	Heating Input Watts
1805	0.992	0.966	0.999	0.997	1.019
1900	1.000	1.000	1.000	1.000	1.000
2090	1.015	1.065	1.002	1.005	0.968
2185	1.021	1.095	1.003	1.008	0.953
2280	1.028	1.128	1.004	1.010	0.939

Table 109. Correction factors for variation in entering air temperature 5 tons, GEVG060

Cooling Entering Air WB°F	Cooling Capacity	Cooling Input Watts	Sensible vs. Entering Dry Bulb Multipliers					Heating Entering Air DB°F	Heating Capacity	Heating Input Watts
			65.6	70.6	75.6	80.6	85.6			
49.4	0.890	0.992	0.906	0.966	1.010	*	*	53.0	1.034	0.849
56.3	0.900	0.990	0.810	0.947	1.037	*	*	58.0	1.024	0.897
60.3	0.912	0.992	0.662	0.861	1.001	1.098	*	63.0	1.012	0.948
63.2	0.951	0.995	0.506	0.755	0.936	1.065	*	68.0	1.000	1.000
66.2	1.000	1.000	–	0.609	0.834	1.000	1.124	73.0	0.987	1.054
72.1	1.115	1.015	–	–	0.543	0.787	0.974	78.0	0.973	1.111
77.1	1.210	1.033	–	–	–	–	0.776	83.0	0.959	1.168

Note: * = Sensible equals total capacity

Cooling and Heating Capacities 6 tons

Table 110. Cooling capacities 6 tons (gross) – GEHE072

EWT	GPM	Gross Cap Mbtuh	Sen. Mbtuh	SHR	Power kW	Reject Mbtuh	LWT	Feet Head
45	9.0	91.3	67.3	0.74	3.03	101.6	67.6	4.0
45	12.0	92.1	67.6	0.73	2.74	101.5	61.9	6.7
45	15.0	92.6	67.9	0.73	2.56	101.4	58.5	10.0
45	18.0	93.0	68.1	0.73	2.43	101.3	56.3	13.8
45	21.0	93.3	68.1	0.73	2.34	101.3	54.6	18.2
55	9.0	88.0	66.0	0.75	3.68	100.5	77.3	3.9
55	12.0	88.6	66.3	0.75	3.39	100.1	71.7	6.5
55	15.0	88.9	66.4	0.75	3.22	99.9	68.3	9.6
55	18.0	89.2	66.5	0.75	3.10	99.8	66.1	13.3
55	21.0	89.4	66.7	0.75	3.01	99.7	64.5	17.5
59	9.0	86.6	65.5	0.76	3.94	100.1	81.2	3.8
59	12.0	87.2	65.7	0.75	3.65	99.6	75.6	6.4
59	15.0	87.5	65.9	0.75	3.48	99.4	72.3	9.5
59	18.0	87.8	66.0	0.75	3.36	99.2	70.0	13.1
59	21.0	87.9	66.0	0.75	3.28	99.1	68.4	17.2
68	9.0	83.6	64.3	0.77	4.56	99.2	90.0	3.7
68	12.0	84.1	64.5	0.77	4.26	98.6	84.4	6.2
68	15.0	84.3	64.6	0.77	4.08	98.3	81.1	9.2
68	18.0	84.5	64.7	0.77	3.96	98.1	78.9	12.7
68	21.0	84.7	64.8	0.76	3.87	97.9	77.3	16.7

Table 110. Cooling capacities 6 tons (gross) – GEHE072 (continued)

EWT	GPM	Gross Cap Mbtuh	Sen. Mbtuh	SHR	Power kW	Reject Mbtuh	LWT	Feet Head
77	9.0	80.3	63.0	0.78	5.48	99.0	99.0	3.6
77	12.0	80.8	63.2	0.78	5.09	98.2	93.4	6.0
77	15.0	81.0	63.3	0.78	4.87	97.6	90.0	8.9
77	18.0	81.2	63.4	0.78	4.72	97.3	87.8	12.3
77	21.0	81.3	63.4	0.78	4.62	97.1	86.2	16.2
86	9.0	76.9	61.5	0.80	6.11	97.7	107.7	3.5
86	12.0	77.4	61.7	0.80	5.74	97.0	102.2	5.9
86	15.0	77.6	61.8	0.80	5.52	96.5	98.9	8.7
86	18.0	77.8	61.9	0.80	5.39	96.2	96.7	12.0
86	21.0	77.9	61.9	0.79	5.29	96.0	95.1	15.7
95	9.0	72.9	60.1	0.82	7.15	97.3	116.6	3.4
95	12.0	73.5	60.5	0.82	6.73	96.4	111.1	5.7
95	15.0	73.8	60.4	0.82	6.48	96.0	107.8	8.5
95	18.0	74.1	60.5	0.82	6.32	95.6	105.6	11.7
95	21.0	74.3	60.3	0.81	6.19	95.4	104.1	15.3
105	9.0	68.7	57.7	0.84	8.230	96.8	126.5	3.1
105	12.0	69.5	58.9	0.85	7.745	95.9	121.0	5.3
105	15.0	70.0	58.4	0.83	7.460	95.5	117.7	7.9
105	18.0	70.2	59.0	0.84	7.281	95.1	115.6	10.9
105	21.0	70.6	58.6	0.83	7.114	94.9	114.0	14.1
115	9.0	64.0	55.7	0.87	9.300	95.7	136.3	2.8
115	12.0	65.0	56.6	0.87	9.000	95.7	131.0	4.6
115	15.0	66.0	56.8	0.86	8.700	95.7	127.8	6.9
115	18.0	66.5	57.5	0.87	8.300	94.8	125.5	9.7
115	21.0	68.0	57.1	0.84	8.100	95.6	124.1	12.5
120	18.0	64.0	56.3	0.88	8.950	94.5	130.5	8.8
120	21.0	65.0	55.9	0.86	8.700	94.7	129.0	11.5

Note: Performance data is tabulated for cooling at 80.6°F DB/66.2°F WB entering air. For conditions other than what is tabulated, multipliers must be used to correct performance. See the fan correction factors table for CFM other than rated and the cooling correction factors for variations in entering air temperature. WLHP data is performance data at ANSI/AHRI/ASHRAE/ISO13256-1. For ANSI/AHRI/ASHRAE/ISO13256-1 GLHP conditions, apply 15% methanol by volume per the antifreeze correction factors found in the performance correction tables. The minimum gpm/ton is 3.0 when the EWT is greater than 115°F and the EAT is less than 67°F WB. Rated GPM: 18.0 Minimum CFM 1920; Nominal CFM 2400, Maximum CFM 2880.

Table 111. Heating capacities 6 tons (gross) GEHE072

EWT	GPM	Gross Cap Mbtuh	Absorb Mbtuh	Power kW	LWT	Feet Head
25	15.0	43.7	30.6	3.84	20.9	11.8
25	18.0	44.2	31.1	3.85	21.5	16.2
25	21.0	44.9	31.7	3.86	22.0	21.2
32	9.0	47.2	33.9	3.90	24.5	4.7
32	12.0	48.8	35.4	3.93	26.1	7.8
32	15.0	49.9	36.5	3.94	27.1	11.4
32	18.0	50.7	37.2	3.95	27.9	15.7
32	21.0	51.3	37.8	3.96	28.4	20.6
45	9.0	57.2	43.4	4.04	35.4	4.6

Table 111. Heating capacities 6 tons (gross) GEHE072 (continued)

EWT	GPM	Gross Cap Mbtuh	Absorb Mbtuh	Power kW	LWT	Feet Head
45	12.0	59.2	45.4	4.07	37.4	7.6
45	15.0	60.7	46.7	4.09	38.8	11.1
45	18.0	61.7	47.6	4.11	39.7	15.3
45	21.0	62.4	48.3	4.11	40.4	20.0
50	9.0	62.1	48.0	4.12	39.3	4.5
50	12.0	64.4	50.2	4.15	41.6	7.3
50	15.0	65.8	51.5	4.17	43.1	10.8
50	18.0	66.8	52.5	4.18	44.2	14.9
50	21.0	67.6	53.2	4.21	44.9	19.4
55	9.0	66.1	51.8	4.18	43.5	4.4
55	12.0	68.7	54.3	4.23	46.0	7.2
55	15.0	70.5	55.9	4.26	47.5	10.6
55	18.0	71.4	56.8	4.27	48.7	14.6
55	21.0	72.2	57.6	4.28	49.5	19.0
68	9.0	77.2	62.3	4.37	54.2	4.2
68	12.0	80.2	65.2	4.41	57.1	6.9
68	15.0	82.1	67.0	4.44	59.1	10.1
68	18.0	83.8	68.5	4.48	60.4	13.9
68	21.0	84.5	69.2	4.48	61.4	18.2
75	9.0	83.2	68.0	4.47	59.9	4.1
75	12.0	86.6	71.1	4.53	63.1	6.7
75	15.0	88.8	73.2	4.56	65.2	9.9
75	18.0	90.1	74.5	4.58	66.7	13.6
75	21.0	91.2	75.5	4.60	67.8	17.7
86	9.0	93.0	77.2	4.65	68.9	3.9
86	12.0	96.6	80.6	4.69	72.6	6.5
86	15.0	99.1	82.9	4.73	74.9	9.5
86	18.0	100.5	84.3	4.75	76.6	13.1
86	21.0	101.7	85.5	4.77	77.9	17.1

Note: Performance data is tabulated for heating at 68°F DB entering air.For conditions other than what is tabulated, multipliers must be used to correct performance. See the fan correction factors table for CFM other than rated and the heating correction factors for variations in entering air temperature. WLHP data is performance data at ANSI/AHRI/ASHRAE/ISO13256-1. For ANSI/AHRI/ASHRAE/ISO13256-1 GLHP conditions, apply 15% methanol by volume per the antifreeze correction factors found in the performance correction tables. Rated GPM: 18.0 Minimum CFM 1920; Nominal CFM 2400, Maximum CFM 2880.

Table 112. Fan correction factors 6 tons - GEHE072

Entering CFM	Cooling Capacity	Sensible Capacity	Cooling Input Watts	Heating Capacity	Heating Input Watts
1920	0.953	0.879	1.008	0.980	1.082
2160	0.979	0.940	1.004	0.989	1.035
2400	1.000	1.000	1.000	1.000	1.000
2640	1.019	1.060	0.996	1.003	0.967
2880	1.034	1.116	0.994	1.008	0.941

Table 113. Correction factors for variation in entering air temperature 6 tons, GEHE072

Cooling Entering Air WB°F	Cooling Capacity	Cooling Input Watts	Sensible vs. Entering Dry Bulb Multipliers					Heating Entering Air DB°F	Heating Capacity	Heating Input Watts
			65.6	70.6	75.6	80.6	85.6			
44.5	0.926	0.982	0.951	1.020	1.092	*	*	43	1.048	0.703
49.4	0.926	0.982	0.952	1.021	1.093	*	*	48	1.038	0.760
56.3	0.927	0.982	0.798	0.997	1.094	*	*	53	1.028	0.817
60.3	0.928	0.983	0.619	0.835	1.049	*	*	58	1.018	0.879
63.2	0.953	0.989	0.492	0.705	0.922	1.140	*	63	1.009	0.938
66.2	1.000	1.000	–	0.573	0.789	1.000	1.208	68	1.000	1.000
72.1	1.114	1.020	–	–	0.518	0.731	0.945	73	0.989	1.065
77.1	1.214	1.029	–	–	–	0.496	0.713	78	0.980	1.134

Note: * = Sensible equals total capacity

Table 114. Cooling capacities 6 tons (gross) – GEVE072

EWT	GPM	Gross Cap Mbtuh	Gross Sen Mbtuh	SHR	Comp Power kW	Reject Mbtuh	LWT	Feet Head
45	9.0	88.8	65.9	0.74	2.56	97.5	66.7	4.0
45	12.0	90.5	66.5	0.74	2.30	98.3	61.4	6.7
45	15.0	91.4	67.0	0.73	2.14	98.7	58.2	10.0
45	18.0	92.0	67.2	0.73	2.02	98.9	56.0	13.8
45	21.0	92.9	67.5	0.73	1.94	99.6	54.5	18.2
55	9.0	85.5	64.6	0.76	3.11	96.2	76.4	3.9
55	12.0	87.0	65.1	0.75	2.86	96.7	71.1	6.5
55	15.0	87.9	65.5	0.74	2.71	97.1	68.0	9.6
55	18.0	88.6	65.7	0.74	2.61	97.5	65.8	13.3
55	21.0	88.9	65.8	0.74	2.54	97.6	64.3	17.5
59	9.0	84.3	64.1	0.76	3.33	95.6	80.3	3.8
59	12.0	85.6	64.6	0.75	3.08	96.2	75.0	6.4
59	15.0	86.5	64.9	0.75	2.94	96.5	71.9	9.5
59	18.0	87.1	65.2	0.75	2.84	96.8	69.8	13.1
59	21.0	87.6	65.3	0.75	2.76	97.0	68.2	17.2
68	9.0	81.5	63.1	0.77	3.84	94.6	89.0	3.7
68	12.0	82.7	63.5	0.77	3.59	95.0	83.8	6.2
68	15.0	83.5	63.8	0.76	3.44	95.3	80.7	9.2
68	18.0	84.0	64.0	0.76	3.34	95.4	78.6	12.7
68	21.0	84.4	64.2	0.76	3.28	95.6	77.1	16.7
77	9.0	78.6	62.1	0.79	4.37	93.6	97.8	3.6
77	12.0	79.8	62.5	0.78	4.13	93.9	92.7	6.0
77	15.0	80.5	62.7	0.78	3.98	94.1	89.5	8.9
77	18.0	81.0	63.0	0.78	3.87	94.2	87.5	12.3
77	21.0	81.4	63.0	0.77	3.80	94.3	86.0	16.2
86	9.0	75.9	61.2	0.81	4.96	92.8	106.6	3.5
86	12.0	77.0	61.6	0.80	4.69	93.0	101.5	5.9
86	15.0	77.6	61.8	0.80	4.54	93.1	98.4	8.7

Table 114. Cooling capacities 6 tons (gross) – GEVE072 (continued)

EWT	GPM	Gross Cap Mbtuh	Gross Sen Mbtuh	SHR	Comp Power kW	Reject Mbtuh	LWT	Feet Head
86	18.0	78.0	61.9	0.79	4.44	93.1	96.3	12.0
86	21.0	78.4	62.1	0.79	4.36	93.3	94.9	15.7
95	9.0	72.7	60.0	0.83	5.60	91.8	115.4	3.4
95	12.0	73.8	60.4	0.82	5.32	91.9	110.3	5.7
95	15.0	74.4	60.6	0.81	5.16	92.0	107.3	8.5
95	18.0	75.0	60.9	0.81	5.05	92.2	105.2	11.7
95	21.0	75.3	61.0	0.81	4.97	92.2	103.8	15.3
105	9.0	69.1	58.9	0.85	6.389	90.9	125.2	3.3
105	12.0	70.1	59.2	0.84	6.093	90.9	120.1	5.5
105	15.0	70.7	59.4	0.84	5.920	90.9	117.1	8.2
105	18.0	71.1	59.5	0.84	5.806	90.9	115.1	11.4
105	21.0	71.3	59.6	0.84	5.726	90.9	113.7	14.9
115	9.0	64.9	57.6	0.89	7.290	89.8	135.0	3.2
115	12.0	66.0	57.9	0.88	6.975	89.8	130.0	5.4
115	15.0	66.6	58.1	0.87	6.789	89.7	127.0	8.0
115	18.0	66.9	58.3	0.87	6.661	89.7	125.0	11.1
115	21.0	67.2	58.3	0.87	6.581	89.7	123.5	14.5
120	18.0	64.7	57.6	0.89	7.145	89.1	129.9	10.9
120	21.0	64.9	57.6	0.89	7.056	89.0	128.5	14.3

Note: Performance data is tabulated for cooling at 80.6°F DB/66.2°F WB entering air. For conditions other than what is tabulated, multipliers must be used to correct performance. See the fan correction factors table for CFM other than rated and the cooling correction factors for variations in entering air temperature. WLHP data is performance data at ANSI/AHRI/ASHRAE/ISO13256-1. For ANSI/AHRI/ASHRAE/ISO13256-1 GLHP conditions, a.pply 15% methanol by volume per the antifreeze correction factors found in the performance correction tables. The minimum gpm/ton is 3.0 when the EWT is greater than 115°F and the EAT is less than 67°F WB. Rated GPM: 18.0 Minimum CFM 1920; Nominal CFM 2400, Maximum CFM 2880

Table 115. Heating capacities 6 tons (gross) - GEVE072

EWT	GPM	Gross Cap Mbtuh	Absorb Mbtuh	Comp Power kW	LWT	Feet Head
25	15.0	46.2	32.7	3.96	20.6	11.8
25	18.0	47.1	33.6	3.97	21.3	16.2
25	21.0	47.8	34.2	3.98	21.7	21.2
32	9.0	49.1	35.5	3.98	24.1	4.7
32	12.0	50.9	37.2	4.01	25.8	7.8
32	15.0	51.8	38.1	4.01	26.9	11.5
32	18.0	52.6	38.9	4.02	27.7	15.7
32	21.0	53.1	39.4	4.03	28.3	20.6
45	9.0	58.9	44.9	4.11	35.0	4.6
45	12.0	61.2	47.0	4.14	37.2	7.6
45	15.0	62.5	48.3	4.16	38.6	11.1
45	18.0	63.4	49.2	4.17	39.5	15.3
45	21.0	64.1	49.8	4.18	40.3	20.0
50	9.0	64.0	49.7	4.19	39.0	4.5
50	12.0	66.4	52.0	4.23	41.3	7.3
50	15.0	67.6	53.1	4.24	42.9	10.8
50	18.0	68.6	54.1	4.26	44.0	14.9

Table 115. Heating capacities 6 tons (gross) - GEVE072 (continued)

EWT	GPM	Gross Cap Mbtuh	Absorb Mbtuh	Comp Power kW	LWT	Feet Head
50	21.0	69.3	54.7	4.27	44.8	19.4
55	9.0	68.2	53.6	4.26	43.1	4.4
55	12.0	70.7	56.0	4.30	45.7	7.2
55	15.0	72.2	57.4	4.32	47.3	10.6
55	18.0	73.2	58.4	4.33	48.5	14.6
55	21.0	73.8	59.0	4.34	49.4	19.0
68	9.0	79.4	64.3	4.44	53.7	4.2
68	12.0	82.4	67.1	4.49	56.8	6.9
68	15.0	84.2	68.8	4.51	58.8	10.1
68	18.0	85.4	69.9	4.53	60.2	13.9
68	21.0	86.2	70.7	4.54	61.3	18.2
75	9.0	85.6	70.1	4.55	59.4	4.1
75	12.0	88.9	73.2	4.60	62.8	6.7
75	15.0	90.7	75.0	4.61	65.0	9.9
75	18.0	92.1	76.3	4.63	66.5	13.6
75	21.0	93.0	77.2	4.65	67.7	17.7
86	9.0	95.4	79.3	4.71	68.4	3.9
86	12.0	99.0	82.8	4.76	72.2	6.5
86	15.0	101.1	84.8	4.79	74.7	9.5
86	18.0	102.5	86.1	4.81	76.4	13.1
86	21.0	103.3	86.9	4.81	77.7	17.1

Note: Performance data is tabulated for heating at 68°F DB entering air. For conditions other than what is tabulated, multipliers must be used to correct performance. See the fan correction factors table for CFM other than rated and the heating correction factors for variations in entering air temperature. WLHP data is performance data at ANSI/AHRI/ASHRAE/ISO13256-1. For ANSI/AHRI/ASHRAE/ISO13256-1 GLHP conditions, apply 15% methanol by volume per the antifreeze correction factors found in the performance correction tables. Rated GPM: 18.0 Minimum CFM 1920; Nominal CFM 2400, Maximum CFM 2800.

Table 116. Fan correction factors 6 tons - GEVE072

Entering CFM	Cooling Capacity	Sensible Capacity	Cooling Input Watts	Heating Capacity	Heating Input Watts
1920	0.962	0.880	1.004	0.978	1.098
2160	0.983	0.939	1.003	0.994	1.068
2400	1.000	1.000	1.000	1.000	1.000
2640	1.013	1.059	0.997	1.008	0.986
2880	1.026	1.122	0.996	1.015	0.957

Table 117. Correction factors for variation in entering air temperature 6 tons, GEVE072

Cooling Entering Air WB°F	Cooling Capacity	Cooling Input Watts	Sensible vs. Entering Dry Bulb Multipliers					Heating Entering Air DB°F	Heating Capacity	Heating Input Watts
			65.6	70.6	75.6	80.6	85.6			
44.5	0.949	0.983	1.005	1.068	1.131	*	*	43	1.063	0.692
49.4	0.950	0.983	1.005	1.068	1.132	*	*	48	1.047	0.748
56.3	0.951	0.983	0.813	1.040	1.134	*	*	53	1.035	0.808
60.3	0.951	0.984	0.623	0.843	1.070	*	*	58	1.023	0.869
63.2	0.962	0.989	0.481	0.702	0.924	1.154	*	63	1.012	0.934
66.2	1.000	1.000	—	0.553	0.775	1.000	1.233	68	1.000	1.000
72.1	1.083	1.019	—	—	0.477	0.700	0.922	73	0.989	1.068

Table 117. Correction factors for variation in entering air temperature 6 tons, GEVE072 (continued)

Cooling Entering Air WB°F	Cooling Capacity	Cooling Input Watts	Sensible vs. Entering Dry Bulb Multipliers					Heating Entering Air DB°F	Heating Capacity	Heating Input Watts
			65.6	70.6	75.6	80.6	85.6			
77.1	1.154	1.030	—	—	—	0.437	0.658	78	0.976	1.143

Note: * = Sensible equals total capacity

Cooling and Heating Capacities 7.5 tons

Table 118. Cooling capacities 7.5 tons (gross) - GEHE090

EWT	GPM	Gross Cap Mbtuh	Sen Mbtuh	SHR	Power kW	Reject Mbtuh	LWT	Feet Head
45	11.3	107.5	80.6	0.75	3.31	118.7	66.0	4.7
45	15.0	108.4	80.9	0.75	3.04	118.7	60.8	7.7
45	18.8	109.0	81.2	0.74	2.86	118.8	57.6	11.6
45	22.5	109.4	81.4	0.74	2.75	118.8	55.6	15.9
45	26.3	109.7	81.5	0.74	2.66	118.8	54.0	21.0
55	11.3	104.1	79.4	0.76	3.90	117.4	75.8	4.5
55	15.0	104.9	79.5	0.76	3.62	117.3	70.6	7.4
55	18.8	105.5	79.8	0.76	3.46	117.3	67.5	11.1
55	22.5	105.8	79.9	0.75	3.35	117.2	65.4	15.3
55	26.3	106.0	79.9	0.75	3.27	117.2	63.9	20.2
59	11.3	102.7	78.8	0.77	4.13	116.8	79.7	4.4
59	15.0	103.5	79.1	0.76	3.87	116.7	74.6	7.3
59	18.8	104.0	79.3	0.76	3.70	116.6	71.4	11.0
59	22.5	104.3	79.2	0.76	3.59	116.5	69.4	15.1
59	26.3	104.5	79.3	0.76	3.51	116.5	67.9	19.9
68	11.3	99.4	77.4	0.78	4.69	115.3	88.4	4.3
68	15.0	100.1	77.6	0.78	4.41	115.1	83.3	7.1
68	18.8	100.5	77.8	0.77	4.25	115.0	80.2	10.6
68	22.5	100.8	77.8	0.77	4.14	114.9	78.2	14.6
68	26.3	101.0	78.0	0.77	4.07	114.9	76.7	19.2
77	11.3	95.8	75.7	0.79	5.28	113.8	97.2	4.2
77	15.0	96.5	76.0	0.79	5.00	113.6	92.1	6.9
77	18.8	96.9	76.3	0.79	4.83	113.4	89.1	10.3
77	22.5	97.2	76.4	0.79	4.71	113.3	87.1	14.2
77	26.3	97.3	76.4	0.79	4.64	113.2	85.6	18.7
86	11.3	91.9	74.4	0.81	5.96	112.2	105.9	4.1
86	15.0	92.5	74.7	0.81	5.65	111.8	100.9	6.7
86	18.8	93.0	74.9	0.81	5.47	111.6	97.9	10.0
86	22.5	93.2	74.9	0.80	5.35	111.4	95.9	13.8
86	26.3	93.4	75.1	0.80	5.27	111.3	94.5	18.1
95	11.3	87.9	72.9	0.83	6.70	110.8	114.6	4.0
95	15.0	88.5	73.1	0.83	6.37	110.3	109.7	6.6
95	18.8	88.9	73.3	0.82	6.18	110.0	106.7	9.8
95	22.5	89.1	73.4	0.82	6.06	109.8	104.8	13.4

Table 118. Cooling capacities 7.5 tons (gross) - GEHE090 (continued)

EWT	GPM	Gross Cap Mbtuh	Sen Mbtuh	SHR	Power kW	Reject Mbtuh	LWT	Feet Head
95	26.3	89.3	73.4	0.82	5.97	109.7	103.3	17.7
105	11.3	83.0	71.9	0.87	7.636	109.1	124.3	3.9
105	15.0	83.6	72.1	0.86	7.291	108.5	119.5	6.4
105	18.8	84.0	71.8	0.85	7.075	108.1	116.5	9.5
105	22.5	84.2	71.9	0.85	6.946	107.9	114.6	13.0
105	26.3	84.5	72.1	0.85	6.852	107.9	113.2	17.2
115	11.3	77.7	69.3	0.89	8.697	107.4	134.0	3.8
115	15.0	78.3	69.6	0.89	8.322	106.7	129.2	6.2
115	18.8	78.6	69.7	0.89	8.105	106.3	126.3	9.3
115	22.5	78.9	70.2	0.89	7.960	106.1	124.4	12.7
115	26.3	79.1	70.2	0.89	7.857	105.9	123.1	16.7
120	22.5	76.1	68.5	0.90	8.539	105.2	129.4	12.6
120	26.3	76.2	68.5	0.90	8.431	105.0	128.0	16.5

Note: Performance data is tabulated for cooling at 80.6°F DB/66.2°F WB entering air. For conditions other than what is tabulated, multipliers must be used to correct performance. See the fan correction factors table for CFM other than rated and the cooling correction factors for variations in entering air temperature. WLHP data is performance data at ANSI/AHRI/ASHRAE/ISO13256-1. For ANSI/AHRI/ASHRAE/ISO13256-1 GLHP conditions, apply 15% methanol by volume per the antifreeze correction factors found in the performance correction tables. The minimum gpm/ton is 3.0 when the EWT is greater than 115°F and the EAT is less than 67°F WB. Rated GPM: 22.5 Minimum CFM 2400; Nominal CFM 3000, Maximum CFM 3600.

Table 119. Heating capacities 7.5 tons (gross) - GEHE090

EWT	GPM	Gross Cap Mbtuh	Absorb Mbtuh	Power kW	LWT	Feet Head
25	18.8	58.5	42.9	4.58	20.4	13.4
25	22.5	59.6	43.9	4.59	21.1	18.3
25	26.3	60.7	45.0	4.60	21.6	24.1
32	11.3	60.9	45.1	4.62	24.0	5.4
32	15.0	62.3	46.5	4.64	25.8	8.8
32	18.8	64.2	48.3	4.66	26.9	13.0
32	22.5	65.2	49.3	4.67	27.6	17.8
32	26.3	65.8	49.8	4.68	28.2	23.4
45	11.3	72.8	56.5	4.77	35.0	5.2
45	15.0	75.5	59.1	4.81	37.1	8.6
45	18.8	77.2	60.7	4.83	38.5	12.7
45	22.5	78.6	62.0	4.86	39.5	17.3
45	26.3	79.3	62.7	4.86	40.2	22.7
50	11.3	79.2	62.5	4.89	38.9	5.1
50	15.0	81.9	65.1	4.92	41.3	8.3
50	18.8	83.8	66.9	4.95	42.9	12.3
50	22.5	84.9	68.0	4.96	44.0	16.8
50	26.3	85.8	68.8	4.97	44.8	22.1
55	11.3	84.3	67.3	4.97	43.1	5.0
55	15.0	87.3	70.2	5.01	45.6	8.2
55	18.8	89.2	72.1	5.03	47.3	12.1
55	22.5	90.4	73.2	5.04	48.5	16.5
55	26.3	91.5	74.3	5.06	49.4	21.7

Table 119. Heating capacities 7.5 tons (gross) - GEHE090 (continued)

EWT	GPM	Gross Cap Mbtuh	Absorb Mbtuh	Power kW	LWT	Feet Head
68	11.3	98.4	80.6	5.20	53.7	4.8
68	15.0	102.0	84.1	5.26	56.8	7.8
68	18.8	104.4	86.4	5.28	58.8	11.5
68	22.5	106.0	87.9	5.30	60.2	15.7
68	26.3	107.2	89.1	5.32	61.2	20.7
75	11.3	106.1	87.9	5.34	59.4	4.7
75	15.0	110.0	91.6	5.38	62.8	7.6
75	18.8	113.4	94.8	5.45	64.9	11.3
75	22.5	115.1	96.4	5.47	66.4	15.4
75	26.3	116.4	97.7	5.49	67.6	20.2
86	11.3	118.6	99.7	5.55	68.4	4.5
86	15.0	123.8	104.6	5.63	72.1	7.4
86	18.8	127.1	107.7	5.69	74.5	10.9
86	22.5	129.2	109.7	5.72	76.2	14.8
86	26.3	130.7	111.1	5.74	77.5	19.5

Note: Performance data is tabulated for heating at 68°F DB entering air. For conditions other than what is tabulated, multipliers must be used to correct performance. See the fan correction factors table for CFM other than rated and the heating correction factors for variations in entering air temperature. WLHP data is performance data at ANSI/AHRI/ASHRAE/ISO13256-1. For ANSI/AHRI/ASHRAE/ISO13256-1 GLHP conditions, apply 15% methanol by volume per the antifreeze correction factors found in the performance correction tables. Rated GPM: 22.5 Minimum CFM 2400; Rated CFM 3000, Maximum CFM 3600.

Table 120. Fan correction factors 7.5 tons - GEHE090

Entering cfm	Cooling Capacity	Sensible Capacity	Cooling Input Watts	Heating Capacity	Heating Input Watts
2400	0.959	0.878	1.002	0.989	1.090
2700	0.981	0.939	1.002	0.997	1.043
3000	1.000	1.000	1.000	1.000	1.000
3300	1.016	1.059	0.999	1.006	0.968
3600	1.030	1.121	0.996	1.013	0.944

Table 121. Correction factors for variation in entering air temperature 7.5 tons, GEHE090

Cooling Entering Air WB°F	Cooling Capacity	Cooling Input Watts	Sensible vs. Entering Dry Bulb Multipliers					Heating Entering Air DB°F	Heating Capacity	Heating Input Watts
			65.6	70.6	75.6	80.6	85.6			
44.5	0.934	0.977	0.963	1.027	1.094	*	*	43	1.056	0.728
49.4	0.934	0.977	0.963	1.028	1.094	*	*	48	1.043	0.779
56.3	0.935	0.978	0.801	1.002	1.095	*	*	53	1.033	0.831
60.3	0.938	0.979	0.612	0.835	1.045	*	*	58	1.022	0.887
63.2	0.957	0.987	0.477	0.698	0.921	1.124	*	63	1.012	0.943
66.2	1.000	1.000	—	0.555	0.779	1.000	1.195	68	1.000	1.000
72.1	1.100	1.024	—	—	0.490	0.718	0.937	73	0.988	1.061
77.1	1.188	1.039	—	—	—	0.466	0.695	78	0.976	1.123

Note: * = Sensible equals total capacity

Table 122. Cooling capacities 7.5 tons (gross) - GEVE090

EWT	GPM	Gross Cap Mbtuh	Gross Sen Mbtuh	SHR	Comp Power kW	Reject Mbtuh	LWT	Feet Head
45	11.3	108.3	80.0	0.74	3.40	119.9	66.2	4.5
45	15.0	109.3	80.4	0.74	3.13	120.0	61.0	7.5
45	18.8	109.9	80.6	0.73	2.96	120.0	57.8	11.3
45	22.5	110.4	80.8	0.73	2.85	120.1	55.7	15.5
45	26.3	110.7	80.9	0.73	2.77	120.1	54.1	20.4
55	11.3	105.1	78.8	0.75	3.98	118.7	76.0	4.4
55	15.0	106.0	79.1	0.75	3.72	118.7	70.8	7.3
55	18.8	106.5	79.3	0.74	3.54	118.6	67.6	10.8
55	22.5	106.9	79.5	0.74	3.44	118.7	65.5	14.9
55	26.3	107.2	79.6	0.74	3.36	118.7	64.0	19.6
59	11.3	103.8	78.4	0.76	4.22	118.2	79.9	4.3
59	15.0	104.6	78.6	0.75	3.95	118.1	74.7	7.2
59	18.8	105.1	78.8	0.75	3.79	118.1	71.6	10.7
59	22.5	105.5	78.9	0.75	3.68	118.1	69.5	14.7
59	26.3	105.7	79.0	0.75	3.60	118.0	68.0	19.4
68	11.3	100.6	77.1	0.77	4.77	116.9	88.7	4.2
68	15.0	101.3	77.4	0.76	4.49	116.7	83.6	6.9
68	18.8	101.8	77.6	0.76	4.33	116.6	80.4	10.4
68	22.5	102.1	77.7	0.76	4.22	116.5	78.4	14.2
68	26.3	102.3	77.7	0.76	4.15	116.5	76.9	18.7
77	11.3	97.2	76.0	0.78	5.38	115.5	97.5	4.1
77	15.0	97.9	76.2	0.78	5.09	115.3	92.4	6.7
77	18.8	98.3	76.3	0.78	4.91	115.1	89.2	10.0
77	22.5	98.6	76.4	0.77	4.80	115.0	87.2	13.8
77	26.3	98.8	76.5	0.77	4.72	114.9	85.7	18.2
86	11.3	93.4	74.5	0.80	6.05	114.1	106.2	4.0
86	15.0	94.1	74.8	0.79	5.74	113.7	101.2	6.6
86	18.8	94.5	74.9	0.79	5.54	113.5	98.1	9.8
86	22.5	94.8	75.0	0.79	5.43	113.3	96.1	13.4
86	26.3	95.0	75.1	0.79	5.34	113.2	94.6	17.7
95	11.3	89.6	73.3	0.82	6.81	112.8	115.0	3.9
95	15.0	90.2	73.4	0.81	6.47	112.3	110.0	6.4
95	18.8	90.6	73.5	0.81	6.28	112.0	106.9	9.5
95	22.5	90.8	73.6	0.81	6.15	111.8	104.9	13.1
95	26.3	91.0	73.7	0.81	6.05	111.7	103.5	17.2
105	11.3	85.0	71.8	0.84	7.770	111.5	124.7	3.8
105	15.0	85.6	71.8	0.84	7.409	110.9	119.8	6.2
105	18.8	86.0	72.0	0.84	7.187	110.5	116.8	9.3
105	22.5	86.2	72.1	0.84	7.050	110.3	114.8	12.7
105	26.3	86.4	72.2	0.84	6.951	110.1	113.4	16.7
115	11.3	80.0	69.9	0.87	8.904	110.4	134.5	3.7

Table 122. Cooling capacities 7.5 tons (gross) - GEVE090 (continued)

EWT	GPM	Gross Cap Mbtuh	Gross Sen Mbtuh	SHR	Comp Power kW	Reject Mbtuh	LWT	Feet Head
115	15.0	80.7	70.3	0.87	8.504	109.7	129.6	6.1
115	18.8	81.1	70.5	0.87	8.261	109.3	126.6	9.0
115	22.5	81.3	70.6	0.87	8.111	109.0	124.7	12.4
115	26.3	81.5	70.7	0.87	8.008	108.8	123.3	16.3
120	22.5	78.6	69.6	0.89	8.722	108.4	129.6	12.2
120	26.3	78.7	69.7	0.88	8.611	108.1	128.2	16.1

Note: Performance data is tabulated for cooling at 80.6°F DB/66.2°F WB entering air. For conditions other than what is tabulated, multipliers must be used to correct performance. See the fan correction factors table for CFM other than rated and the cooling correction factors for variations in entering air temperature. WLHP data is performance data at ANSI/AHRI/ASHRAE/ISO13256-1. For ANSI/AHRI/ASHRAE/ISO13256-1 GLHP conditions, apply 15% methanol by volume per the antifreeze correction factors found in the performance correction tables. The minimum gpm/ton is 3.0 when the EWT is greater than 115°F and the EAT is less than 67°F WB. Rated GPM: 22.5 Minimum CFM 2400; Nominal CFM 3000, Maximum CFM 3600.

Table 123. Heating capacities 7.5 tons (gross) - GEVE090

EWT	GPM	Gross Cap Mbtuh	Absorb Mbtuh	Comp Power kW	LWT	Feet Head
25	18.8	55.7	40.0	4.61	20.7	13.1
25	22.5	57.0	41.2	4.62	21.3	17.9
25	26.3	58.9	43.1	4.63	21.7	23.4
32	11.3	59.1	43.2	4.66	24.3	5.2
32	15.0	61.1	45.1	4.68	26.0	8.6
32	18.8	62.4	62.4	0.00	25.4	12.7
32	22.5	63.3	47.3	4.70	27.8	17.4
32	26.3	64.5	64.5	0.00	27.1	22.8
45	11.3	70.7	54.4	4.78	35.4	5.1
45	15.0	73.1	56.6	4.81	37.4	8.3
45	18.8	74.7	58.2	4.82	38.8	12.3
45	22.5	75.8	59.2	4.84	39.7	16.9
45	26.3	76.7	60.1	4.85	40.4	22.1
50	11.3	76.3	59.7	4.86	39.4	5.0
50	15.0	79.0	62.3	4.89	41.7	8.1
50	18.8	80.8	64.0	4.91	43.2	12.0
50	22.5	82.0	65.1	4.93	44.2	16.4
50	26.3	82.8	65.9	4.94	45.0	21.5
55	11.3	81.1	64.3	4.92	43.6	4.9
55	15.0	84.0	67.1	4.96	46.1	8.0
55	18.8	85.9	68.9	4.99	47.7	11.8
55	22.5	87.1	70.1	5.00	48.8	16.1
55	26.3	88.0	70.9	5.01	49.6	21.1
68	11.3	94.0	76.6	5.11	54.4	4.7
68	15.0	97.6	80.0	5.15	57.3	7.6
68	18.8	99.9	82.2	5.18	59.3	11.2
68	22.5	101.4	83.6	5.20	60.6	15.3
68	26.3	102.6	84.8	5.21	61.6	20.1
75	11.3	101.2	83.4	5.21	60.2	4.5
75	15.0	105.1	87.1	5.26	63.4	7.4

Table 123. Heating capacities 7.5 tons (gross) - GEVE090 (continued)

EWT	GPM	Gross Cap Mbtuh	Absorb Mbtuh	Comp Power kW	LWT	Feet Head
75	18.8	107.6	89.5	5.29	65.5	11.0
75	22.5	109.2	91.1	5.32	66.9	15.0
75	26.3	110.4	92.2	5.33	68.0	19.6
86	11.3	112.6	94.3	5.39	69.3	4.4
86	15.0	116.9	98.4	5.44	72.9	7.2
86	18.8	120.0	101.2	5.49	75.2	10.6
86	22.5	121.9	103.0	5.51	76.8	14.5
86	26.3	122.7	103.9	5.52	78.1	18.9

Note: Performance data is tabulated for heating at 68°F DB entering air. For conditions other than what is tabulated, multipliers must be used to correct performance. See the fan correction factors table for CFM other than rated and the heating correction factors for variations in entering air temperature. WLHP data is performance data at ANSI/AHRI/ASHRAE/ISO13256-1. For ANSI/AHRI/ASHRAE/ISO13256-1 GLHP conditions, apply 15% methanol by volume per the antifreeze correction factors found in the performance correction tables. Rated GPM: 22.5 Minimum CFM 2400; Nominal CFM 3000, Maximum CFM 3600.

Table 124. Fan correction factors 7.5 tons - GEVE090

Entering CFM	Cooling Capacity	Sensible Capacity	Cooling Input Watts	Heating Capacity	Heating Input Watts
2400	0.960	0.876	1.006	0.978	1.091
2700	0.982	0.938	1.003	0.990	1.039
3000	1.000	1.000	1.000	1.000	1.000
3300	1.016	1.062	0.999	1.009	0.968
3600	1.031	1.124	0.997	1.016	0.942

Table 125. Correction factors for variation in entering air temperature 7.5 tons, GEVE090

Cooling Entering Air WB°F	Cooling Capacity	Cooling Input Watts	Sensible vs. Entering Dry Bulb Multipliers					Heating Entering Air DB°F	Heating Capacity	Heating Input Watts
			65.6	70.6	75.6	80.6	85.6			
44.5	0.943	0.981	0.994	1.058	1.125	*	*	43	1.068	0.713
49.4	0.944	0.981	0.995	1.059	1.125	*	*	48	1.057	0.768
56.3	0.945	0.981	0.806	1.020	1.127	*	*	53	1.042	0.824
60.3	0.946	0.982	0.615	0.837	1.067	*	*	58	1.028	0.880
63.2	0.963	0.988	0.459	0.690	0.920	1.140	*	63	1.014	0.938
66.2	1.000	1.000	—	0.535	0.767	1.000	1.210	68	1.000	1.000
72.1	1.088	1.023	—	—	0.455	0.688	0.920	73	0.988	1.066
77.1	1.169	1.037	—	—	—	0.415	0.652	78	0.974	1.133

Note: * = Sensible equals total capacity

Cooling and Heating Capacities 10 tons

Table 126. Cooling capacities 10 tons (gross) - GEHE120

EWT	GPM	Gross Cap Mbtuh	Sen Mbtuh	SHR	Power kW	Reject Mbtuh	LWT	Feet Head
45	15.0	142.9	108.1	0.76	4.54	158.4	66.1	4.7
45	20.0	143.9	108.5	0.75	4.19	158.2	60.8	7.9
45	25.0	144.4	108.7	0.75	3.99	158.0	57.6	11.7
45	30.0	144.8	108.9	0.75	3.85	157.9	55.5	16.2
45	35.0	145.1	109.0	0.75	3.75	157.9	54.0	21.3
55	15.0	138.5	106.2	0.77	5.29	156.5	75.9	4.6

Table 126. Cooling capacities 10 tons (gross) - GEHE120 (continued)

EWT	GPM	Gross Cap Mbtuh	Sen Mbtuh	SHR	Power kW	Reject Mbtuh	LWT	Feet Head
55	20.0	139.4	106.6	0.77	4.94	156.3	70.6	7.6
55	25.0	139.9	106.8	0.76	4.74	156.1	67.5	11.3
55	30.0	140.2	107.0	0.76	4.60	155.9	65.4	15.6
55	35.0	140.5	107.1	0.76	4.51	155.9	63.9	20.5
59	15.0	136.6	105.5	0.77	5.60	155.7	79.8	4.5
59	20.0	137.5	105.8	0.77	5.25	155.4	74.5	7.5
59	25.0	138.0	106.1	0.77	5.05	155.2	71.4	11.1
59	30.0	138.4	106.3	0.77	4.91	155.1	69.3	15.4
59	35.0	138.6	106.3	0.77	4.81	155.0	67.9	20.2
68	15.0	132.2	103.6	0.78	6.34	153.8	88.5	4.4
68	20.0	133.1	104.0	0.78	5.97	153.5	83.3	7.3
68	25.0	133.6	104.1	0.78	5.76	153.2	80.3	10.8
68	30.0	133.9	104.3	0.78	5.62	153.1	78.2	14.9
68	35.0	134.1	104.5	0.78	5.52	153.0	76.7	19.6
77	15.0	127.6	101.7	0.80	7.11	151.8	97.2	4.2
77	20.0	128.4	102.0	0.79	6.74	151.4	92.1	7.1
77	25.0	128.9	102.2	0.79	6.53	151.2	89.1	10.5
77	30.0	129.2	102.4	0.79	6.39	151.0	87.1	14.5
77	35.0	129.5	102.4	0.79	6.29	150.9	85.6	19.0
86	15.0	122.7	99.6	0.81	7.95	149.8	106.0	4.1
86	20.0	123.5	100.0	0.81	7.57	149.3	100.9	6.9
86	25.0	124.0	100.2	0.81	7.34	149.1	97.9	10.2
86	30.0	124.3	100.3	0.81	7.19	148.8	95.9	14.1
86	35.0	124.5	100.4	0.81	7.08	148.7	94.5	18.4
95	15.0	117.5	97.4	0.83	8.86	147.7	114.7	4.0
95	20.0	118.3	97.8	0.83	8.46	147.2	109.7	6.7
95	25.0	118.8	98.0	0.82	8.23	146.9	106.8	9.9
95	30.0	119.1	98.1	0.82	8.08	146.7	104.8	13.7
95	35.0	119.4	98.2	0.82	7.97	146.6	103.4	18.0
105	15.0	110.8	95.9	0.87	9.960	144.8	124.3	3.9
105	20.0	112.3	95.4	0.85	9.576	144.9	119.5	6.5
105	25.0	112.7	95.5	0.85	9.309	144.5	116.6	9.6
105	30.0	113.0	95.6	0.85	9.147	144.2	114.6	13.3
105	35.0	113.2	95.7	0.84	9.033	144.0	113.2	17.5
115	15.0	103.7	93.4	0.90	11.231	142.0	133.9	3.8
115	20.0	104.6	93.6	0.90	10.795	141.4	129.1	6.3
115	25.0	105.1	93.9	0.89	10.539	141.0	126.3	9.4
115	30.0	105.3	94.0	0.89	10.370	140.7	124.4	13.0
115	35.0	105.6	94.0	0.89	10.250	140.5	123.0	17.0
120	30.0	101.7	92.7	0.91	11.030	139.4	129.3	12.8

Table 126. Cooling capacities 10 tons (gross) - GEHE120 (continued)

EWT	GPM	Gross Cap Mbtuh	Sen Mbtuh	SHR	Power kW	Reject Mbtuh	LWT	Feet Head
120	35.0	102.0	92.7	0.91	10.907	139.2	128.0	16.8

Note: Performance data is tabulated for cooling at 80.6°F DB/66.2°F WB entering air. For conditions other than what is tabulated, multipliers must be used to correct performance. See the fan correction factors table for CFM other than rated and the cooling correction factors for variations in entering air temperature. WLHP data is performance data at ANSI/AHRI/ASHRAE/ISO13256-1. For ANSI/AHRI/ASHRAE/ISO13256-1 GLHP conditions, apply 15% methanol by volume per the antifreeze correction factors found in the performance correction tables. The minimum gpm/ton is 3.0 when the EWT is greater than 115°F and the EAT is less than 67°F WB. Rated GPM: 30.0 Minimum CFM 3200; Nominal CFM 4000, Maximum CFM 4800.

Table 127. Heating capacities 10 tons (gross) - GEHE120

EWT	GPM	Gross Cap Mbtuh	Absorb Mbtuh	Power kW	LWT	Feet Head
25	25.0	73.7	54.5	5.63	20.6	13.6
25	30.0	74.5	55.3	5.62	21.3	18.7
25	35.0	75.4	56.2	5.62	21.8	24.4
32	15.0	79.2	59.7	5.71	24.0	5.4
32	20.0	80.6	61.1	5.72	25.9	9.0
32	25.0	81.5	62.0	5.72	27.0	13.2
32	30.0	81.4	61.9	5.71	27.9	18.1
32	35.0	81.9	62.3	5.72	28.4	23.7
45	15.0	94.3	74.0	5.93	35.1	5.3
45	20.0	95.5	75.3	5.93	37.5	8.7
45	25.0	96.1	75.9	5.93	38.9	12.8
45	30.0	97.3	77.0	5.95	39.9	17.6
45	35.0	96.3	76.1	5.91	40.7	23.0
50	15.0	103.5	82.6	6.10	39.0	5.1
50	20.0	104.4	83.6	6.09	41.6	8.5
50	25.0	104.2	83.5	6.06	43.3	12.5
50	30.0	104.1	83.5	6.05	44.4	17.1
50	35.0	103.8	83.2	6.03	45.2	22.4
55	15.0	109.7	88.5	6.21	43.2	5.1
55	20.0	111.4	90.2	6.21	46.0	8.3
55	25.0	110.8	89.7	6.17	47.8	12.2
55	30.0	110.3	89.4	6.14	49.0	16.8
55	35.0	110.0	89.1	6.13	49.9	21.9
68	15.0	127.7	105.5	6.51	53.9	4.8
68	20.0	129.1	106.9	6.51	57.3	7.9
68	25.0	129.2	107.0	6.49	59.4	11.7
68	30.0	129.3	107.2	6.48	60.9	16.0
68	35.0	127.7	105.8	6.43	62.0	20.9
75	15.0	137.9	115.0	6.71	59.7	4.7
75	20.0	139.6	116.7	6.72	63.3	7.7
75	25.0	139.8	116.9	6.70	65.6	11.4
75	30.0	140.2	117.3	6.71	67.2	15.6
75	35.0	137.6	115.0	6.63	68.4	20.4
86	15.0	154.9	130.7	7.07	68.6	4.6
86	20.0	157.0	132.8	7.11	72.7	7.5

Table 127. Heating capacities 10 tons (gross) - GEHE120 (continued)

EWT	GPM	Gross Cap Mbtuh	Absorb Mbtuh	Power kW	LWT	Feet Head
86	25.0	158.2	133.8	7.13	75.3	11.0
86	30.0	155.3	131.3	7.05	77.2	15.1
86	35.0	153.7	129.8	7.00	78.6	19.7

Note: Performance data is tabulated for heating at 68°F DB entering air. For conditions other than what is tabulated, multipliers must be used to correct performance. See the fan correction factors table for CFM other than rated and the heating correction factors for variations in entering air temperature. WLHP data is performance data at ANSI/AHRI/ASHRAE/ISO13256-1. For ANSI/AHRI/ASHRAE/ISO13256-1 GLHP conditions, apply 15% methanol by volume per the antifreeze correction factors found in the performance correction tables. Rated GPM: 30.0 Minimum CFM 3200; Nominal CFM 4000, Maximum CFM 4800.

Table 128. Fan correction factors 10 tons - GEHE120

Entering cfm	Cooling Capacity	Sensible Capacity	Cooling Input Watts	Heating Capacity	Heating Input Watts
3200	0.958	0.881	0.999	0.971	0.961
3600	0.981	0.941	1.001	0.986	0.928
4000	1.000	1.000	1.000	1.000	1.000
4400	1.016	1.057	1.001	1.003	0.876
4800	1.031	1.112	1.001	1.019	0.860

Table 129. Correction factors for variation in entering air temperature 10 tons, GEHE120

Cooling Entering Air WB°F	Cooling Capacity	Cooling Input Watts	Sensible vs. Entering Dry Bulb Multipliers					Heating Entering Air DB°F	Heating Capacity	Heating Input Watts
			65.6	70.6	75.6	80.6	85.6			
44.5	0.937	0.987	0.966	1.029	1.094	*	*	43	1.119	0.748
49.4	0.937	0.987	0.967	1.029	1.095	*	*	48	1.088	0.794
56.3	0.938	0.987	0.803	1.005	1.096	*	*	53	1.065	0.843
60.3	0.939	0.987	0.618	0.838	1.047	*	*	58	1.041	0.893
63.2	0.954	0.992	0.479	0.702	0.922	1.130	*	63	1.021	0.946
66.2	1.000	1.000	—	0.557	0.780	1.000	1.202	68	1.000	1.000
72.1	1.096	1.016	—	—	0.489	0.714	0.937	73	0.967	1.049
77.1	1.184	1.028	—	—	—	0.461	0.687	78	0.940	1.103

Note: * = Sensible equals total capacity

Table 130. Cooling capacities 10 tons (gross) - GEVE120

EWT	GPM	Gross Cap Mbtuh	Gross Sen Mbtuh	SHR	Comp Power kW	Reject Mbtuh	LWT	Feet Head
45	15	144.4	105.4	0.73	4.250	158.9	66.2	4.7
45	20	145.9	106.0	0.73	3.870	159.1	60.9	7.9
45	25	146.8	106.4	0.72	3.650	159.3	57.7	11.7
45	30	147.4	106.6	0.72	3.500	159.4	55.6	16.2
45	35	147.9	106.8	0.72	3.400	159.5	54.1	21.3
55	15	139.9	103.8	0.74	5.020	157.1	75.9	4.6
55	20	141.4	104.3	0.74	4.680	157.4	70.7	7.6
55	25	142.3	104.6	0.74	4.460	157.5	67.6	11.3
55	30	142.9	104.8	0.73	4.320	157.6	65.5	15.6
55	35	143.3	105.0	0.73	4.220	157.7	64.0	20.5
59	15	138.0	102.9	0.75	5.340	156.2	79.8	4.5
59	20	139.4	103.5	0.74	4.990	156.4	74.6	7.5
59	25	140.4	103.9	0.74	4.790	156.7	71.5	11.1

Table 130. Cooling capacities 10 tons (gross) - GEVE120 (continued)

EWT	GPM	Gross Cap Mbtuh	Gross Sen Mbtuh	SHR	Comp Power kW	Reject Mbtuh	LWT	Feet Head
59	30	141.0	104.1	0.74	4.650	156.8	69.5	15.4
59	35	141.4	104.3	0.74	4.540	156.9	68.0	20.2
68	15	133.4	101.3	0.76	6.050	154.0	88.5	4.4
68	20	134.8	101.8	0.76	5.710	154.3	83.4	7.3
68	25	135.8	102.3	0.75	5.500	154.6	80.4	10.8
68	30	136.3	102.5	0.75	5.370	154.6	78.3	14.9
68	35	136.7	102.5	0.75	5.270	154.7	76.8	19.6
77	15	128.7	99.5	0.77	6.810	152.0	97.3	4.2
77	20	130.1	99.9	0.77	6.460	152.1	92.2	7.1
77	25	130.9	100.2	0.77	6.250	152.2	89.2	10.5
77	30	131.4	100.5	0.76	6.110	152.3	87.2	14.5
77	35	131.8	100.6	0.76	6.020	152.3	85.7	19.0
86	15	123.8	97.9	0.79	7.620	149.8	106.0	4.1
86	20	125.1	98.3	0.79	7.260	149.9	101.0	6.9
86	25	125.9	98.5	0.78	7.040	149.9	98.0	10.2
86	30	126.4	98.7	0.78	6.900	150.0	96.0	14.1
86	35	126.8	98.9	0.78	6.800	150.0	94.6	18.4
95	15	118.5	96.1	0.81	8.510	147.5	114.7	4.0
95	20	119.9	96.6	0.81	8.130	147.6	109.8	6.7
95	25	120.6	96.8	0.80	7.920	147.7	106.8	9.9
95	30	121.2	96.9	0.80	7.770	147.7	104.8	13.7
95	35	121.5	97.0	0.80	7.650	147.6	103.4	18
105	15	112.1	94.0	0.84	9.555	144.7	124.3	3.9
105	20	113.6	94.6	0.83	9.174	144.9	119.5	6.5
105	25	114.4	94.8	0.83	8.947	144.9	116.6	9.6
105	30	114.9	95.0	0.83	8.798	144.9	114.7	13.3
105	35	115.3	95.1	0.83	8.696	145.0	113.3	17.5
115	15	105.2	91.8	0.87	10.713	141.8	133.9	3.8
115	20	106.6	92.4	0.87	10.316	141.8	129.2	6.3
115	25	107.4	92.6	0.86	10.093	141.9	126.3	9.4
115	30	107.9	92.6	0.86	9.930	141.8	124.5	13.0
115	35	108.3	92.8	0.86	9.821	141.8	123.1	17.0
120	30	104.2	91.5	0.88	10.546	140.2	129.3	12.8
120	35	104.6	91.7	0.88	10.437	140.2	128.0	16.8

Note: Performance data is tabulated for cooling at 80.6°F DB/66.2°F WB entering air. For conditions other than what is tabulated, multipliers must be used to correct performance. See the fan correction factors table for CFM other than rated and the cooling correction factors for variations in entering air temperature. WLHP data is performance data at ANSI/AHRI/ASHRAE/ISO13256-1. For ANSI/AHRI/ASHRAE/ISO13256-1 GLHP conditions, apply 15% methanol by volume per the antifreeze correction factors found in the performance correction tables. The minimum gpm/ton is 3.0 when the EWT is greater than 115°F and the EAT is less than 67°F WB. Rated GPM: 30.0 Minimum CFM 3200; Nominal CFM 4000, Maximum CFM 4800.

Table 131. Heating capacities 10 tons (gross) - GEVE120

EWT	GPM	Gross Cap Mbtuh	Absorb Mbtuh	Comp Power kW	LWT	EWT
25	25	74.7	54.2	5.99	20.7	13.6
25	30	75.8	55.3	6.01	21.3	18.7

Table 131. Heating capacities 10 tons (gross) - GEVE120 (continued)

EWT	GPM	Gross Cap Mbtuh	Absorb Mbtuh	Comp Power kW	LWT	EWT
25	35	76.5	56.0	6.02	21.8	24.4
32	15	78.5	57.9	6.03	24.3	5.4
32	20	81.1	60.4	6.06	26.0	9.0
32	25	82.8	62.1	6.08	27.0	13.2
32	30	84.0	63.2	6.10	27.8	18.1
32	35	84.9	64.0	6.11	28.3	23.7
45	15	93.1	71.9	6.21	35.4	5.3
45	20	96.2	74.9	6.25	37.5	8.7
45	25	98.5	77.1	6.28	38.8	12.8
45	30	100.0	78.5	6.30	39.8	17.6
45	35	101.2	79.6	6.33	40.5	23.1
50	15	101.3	79.6	6.34	39.4	5.1
50	20	104.8	83.0	6.41	41.7	8.5
50	25	106.9	85.0	6.44	43.2	12.5
50	30	108.6	86.5	6.47	44.2	17.1
50	35	109.7	87.6	6.49	45.0	22.4
55	15	107.7	85.7	6.46	43.6	5.0
55	20	111.3	89.0	6.51	46.1	8.3
55	25	113.8	91.4	6.56	47.7	12.2
55	30	115.4	92.9	6.58	48.8	16.8
55	35	116.6	94.1	6.60	49.6	22.0
68	15	124.6	101.6	6.74	54.5	4.8
68	20	129.1	105.8	6.82	57.4	7.9
68	25	132.0	108.5	6.87	59.3	11.7
68	30	133.9	110.3	6.91	60.6	16.0
68	35	135.2	111.6	6.93	61.6	20.9
75	15	134.3	110.6	6.93	60.3	4.7
75	20	139.2	115.2	7.02	63.5	7.7
75	25	142.4	118.2	7.09	65.5	11.4
75	30	144.5	120.1	7.13	67.0	15.6
75	35	145.8	121.4	7.13	68.1	20.4
86	15	149.7	125.0	7.24	69.3	4.5
86	20	155.3	130.2	7.36	73.0	7.5
86	25	158.8	133.4	7.44	75.3	11.0
86	30	161.1	135.5	7.49	77.0	15.1
86	35	162.7	137.0	7.53	78.2	19.7

Note: Performance data is tabulated for heating at 68°F DB entering air. For conditions other than what is tabulated, multipliers must be used to correct performance. See the fan correction factors table for CFM other than rated and the heating correction factors for variations in entering air temperature. WLHP data is performance data at ANSI/AHRI/ASHRAE/ISO13256-1. For ANSI/AHRI/ASHRAE/ISO13256-1 GLHP conditions, apply 15% methanol by volume per the antifreeze correction factors found in the performance correction tables. Rated GPM: 30.0 Minimum CFM 3200; Nominal CFM 4000, Maximum CFM 4800.

Table 132. Fan correction factors 10 tons - GEVE120

Entering CFM	Cooling Capacity	Sensible Capacity	Cooling Input Watts	Heating Capacity	Heating Input Watts
3200	0.960	0.873	0.998	0.980	1.086
3600	0.981	0.936	0.999	0.991	1.038
4000	1.000	1.000	1.000	1.000	1.000
4400	1.016	1.063	1.001	1.008	0.970
4800	1.031	1.127	1.001	1.017	0.947

Table 133. Correction factors for variation in entering air temperature 10 tons, GEVE120

Cooling Entering Air WB°F	Cooling Capacity	Cooling Input Watts	Sensible vs. Entering Dry Bulb Multipliers					Heating Entering Air DB°F	Heating Capacity	Heating Input Watts
			65.6	70.6	75.6	80.6	85.6			
44.5	0.943	0.997	1.007	1.073	1.140	*	*	43	1.077	0.718
49.4	0.944	0.997	1.008	1.073	1.141	*	*	48	1.057	0.769
56.3	0.945	0.997	0.803	1.041	1.142	*	*	53	1.042	0.824
60.3	0.946	0.997	0.594	0.834	1.077	*	*	58	1.030	0.881
63.2	0.962	0.997	0.439	0.679	0.920	1.164	*	63	1.015	0.941
66.2	1.000	1.000	—	0.515	0.756	1.000	1.245	68	1.000	1.000
72.1	1.088	1.004	—	—	0.430	0.672	0.913	73	0.985	1.062
77.1	1.169	1.010	—	—	—	0.385	0.630	78	0.970	1.126

Note: * = Sensible equals total capacity

Cooling and Heating Capacities 12.5 tons

Table 134. Cooling capacities 12.5 tons (gross) - GEHE150

EWT	GPM	Gross Cap Mbtuh	Sen Mbtuh	SHR	Power kW	Reject Mbtuh	LWT	Feet Head
45	18.8	182.2	135.2	0.74	6.520	204.5	66.8	4.5
45	25.0	183.8	135.8	0.74	6.160	204.9	61.4	7.5
45	31.3	184.8	136.2	0.74	5.940	205.1	58.1	11.2
45	37.5	185.5	136.5	0.74	5.800	205.3	56.0	15.4
45	43.8	186.1	136.7	0.73	5.700	205.5	54.4	20.3
55	18.8	177.1	133.3	0.75	7.340	202.2	76.5	4.4
55	25.0	178.6	133.8	0.75	6.940	202.2	71.2	7.2
55	31.3	179.5	134.2	0.75	6.710	202.4	67.9	10.8
55	37.5	180.1	134.4	0.75	6.570	202.5	65.8	14.9
55	43.8	180.5	134.6	0.75	6.460	202.6	64.2	19.6
59	18.8	175.0	132.4	0.76	7.680	201.2	80.4	4.3
59	25.0	176.4	133.0	0.75	7.290	201.3	75.1	7.1
59	31.3	177.2	133.3	0.75	7.040	201.3	71.9	10.6
59	37.5	177.8	133.5	0.75	6.890	201.3	69.7	14.6
59	43.8	178.2	133.7	0.75	6.790	201.4	68.2	19.3
68	18.8	169.9	130.5	0.77	8.520	199.0	89.2	4.2
68	25.0	171.2	131.0	0.77	8.100	198.8	83.9	6.9
68	31.3	172.0	131.3	0.76	7.850	198.8	80.7	10.3
68	37.5	172.5	131.5	0.76	7.690	198.8	78.6	14.2

Table 134. Cooling capacities 12.5 tons (gross) - GEHE150 (continued)

EWT	GPM	Gross Cap Mbtuh	Sen Mbtuh	SHR	Power kW	Reject Mbtuh	LWT	Feet Head
68	43.8	172.9	131.6	0.76	7.580	198.7	77.1	18.7
77	18.8	164.4	128.4	0.78	9.440	196.6	97.9	4.0
77	25.0	165.7	128.9	0.78	9.000	196.4	92.7	6.7
77	31.3	166.4	129.2	0.78	8.720	196.2	89.5	10
77	37.5	166.9	129.3	0.78	8.560	196.1	87.5	13.8
77	43.8	167.2	129.5	0.77	8.430	196.0	85.9	18.1
86	18.8	158.5	126.3	0.80	10.470	194.2	106.7	3.9
86	25.0	159.7	126.7	0.79	9.990	193.8	101.5	6.5
86	31.3	160.4	127.0	0.79	9.710	193.6	98.4	9.7
86	37.5	160.9	127.1	0.79	9.520	193.4	96.3	13.4
86	43.8	161.2	127.3	0.79	9.390	193.3	94.8	17.6
95	18.8	152.0	123.9	0.82	11.550	191.4	115.4	3.8
95	25.0	153.2	124.3	0.81	11.070	191.0	110.3	6.4
95	31.3	153.9	124.6	0.81	10.780	190.7	107.2	9.5
95	37.5	154.3	124.7	0.81	10.590	190.5	105.2	13
95	43.8	154.6	124.8	0.81	10.460	190.3	103.7	17.1
105	18.8	144.1	121.2	0.84	12.896	188.1	125.0	3.7
105	25.0	145.3	121.6	0.84	12.377	187.6	120.0	6.2
105	31.3	146.0	121.9	0.83	12.072	187.2	117.0	9.2
105	37.5	146.5	122.0	0.83	11.874	187.0	115.0	12.7
105	43.8	146.8	122.1	0.83	11.733	186.9	113.5	16.7
115	18.8	135.4	118.4	0.87	14.355	184.4	134.6	3.6
115	25.0	136.7	118.8	0.87	13.828	183.9	129.7	6.0
115	31.3	137.4	119.0	0.87	13.511	183.5	126.7	9.0
115	37.5	137.9	119.2	0.86	13.306	183.3	124.8	12.3
115	43.8	138.2	119.3	0.86	13.158	183.1	123.4	16.2
120	37.5	133.2	117.7	0.88	14.081	181.2	129.7	12.2
120	43.8	133.5	117.8	0.88	13.959	181.2	128.3	16.0

Note: Performance data is tabulated for cooling at 80.6°F DB/66.2°F WB entering air. For conditions other than what is tabulated, multipliers must be used to correct performance. See the fan correction factors table for CFM other than rated and the cooling correction factors for variations in entering air temperature. WLHP data is performance data at ANSI/AHRI/ASHRAE/ISO13256-1. For ANSI/AHRI/ASHRAE/ISO13256-1 GLHP conditions, apply 15% methanol by volume per the antifreeze correction factors found in the performance correction tables. The minimum gpm/ton is 3.0 when the EWT is greater than 115°F and the EAT is less than 67°F WB. Rated GPM: 37.5 Minimum CFM 4000; Nominal CFM 5000, Maximum CFM 6000.

Table 135. Heating capacities 12.5 tons (gross) - GEHE150

EWT	GPM	Gross Cap Mbtuh	Absorb Mbtuh	Comp Power kW	LWT	Feet Head
25	31.3	104.1	75.2	8.47	20.2	12.6
25	37.5	105.2	76.3	8.47	20.9	17.3
25	43.8	106.1	77.2	8.48	21.5	22.6
32	18.8	109.0	79.7	8.58	23.5	5.1
32	25.0	112.6	83.2	8.62	25.3	8.3
32	31.3	114.8	85.3	8.64	26.6	12.2
32	37.5	116.4	86.9	8.64	27.4	16.8
32	43.8	117.6	88.1	8.65	28.0	22.0

Table 135. Heating capacities 12.5 tons (gross) - GEHE150 (continued)

EWT	GPM	Gross Cap Mbtuh	Absorb Mbtuh	Comp Power kW	LWT	Feet Head
45	18.8	128.7	98.9	8.74	34.5	4.9
45	25.0	133.3	103.3	8.79	36.7	8.1
45	31.3	136.2	106.2	8.82	38.2	11.9
45	37.5	138.4	108.2	8.84	39.2	16.3
45	43.8	139.9	109.7	8.85	40.0	21.4
50	18.8	138.7	108.3	8.91	38.5	4.8
50	25.0	143.6	113.1	8.94	41.0	7.8
50	31.3	146.8	116.2	8.96	42.6	11.6
50	37.5	148.9	118.2	8.98	43.7	15.8
50	43.8	150.4	119.7	9.00	44.5	20.8
55	18.8	147.1	116.4	9.00	42.6	4.7
55	25.0	152.6	121.7	9.06	45.3	7.7
55	31.3	156.1	125.0	9.09	47.0	11.4
55	37.5	158.4	127.3	9.12	48.2	15.5
55	43.8	160.2	129.0	9.13	49.1	20.4
68	18.8	170.4	138.5	9.33	53.3	4.5
68	25.0	177.2	145.1	9.40	56.4	7.3
68	31.3	181.7	149.5	9.44	58.4	10.8
68	37.5	184.9	152.5	9.47	59.9	14.8
68	43.8	187.1	154.7	9.49	60.9	19.4
75	18.8	183.2	150.8	9.50	59.0	4.4
75	25.0	191.1	158.3	9.61	62.3	7.2
75	31.3	196.6	163.5	9.69	64.6	10.6
75	37.5	200.6	167.3	9.75	66.1	14.5
75	43.8	203.1	169.9	9.75	67.2	19.0
86	18.8	205.2	171.4	9.89	67.8	4.2
86	25.0	214.9	180.8	10.01	71.5	6.9
86	31.3	221.3	186.8	10.09	74.1	10.2
86	37.5	225.6	191.0	10.14	75.8	14.0
86	43.8	228.8	194.1	10.17	77.1	18.3

Note: Performance data is tabulated for heating at 68°F DB entering air. For conditions other than what is tabulated, multipliers must be used to correct performance. See the fan correction factors table for CFM other than rated and the heating correction factors for variations in entering air temperature. WLHP data shown is performance data at ANSI/AHRI/ASHRAE/ISO13256-1. For ANSI/AHRI/ASHRAE/ISO13256-1 GLHP conditions, apply 15% methanol by volume per the antifreeze correction factors found in the performance correction tables. Rated GPM: 37.5 Minimum CFM 4000; Nominal CFM 5000, Maximum CFM 6000.

Table 136. Fan correction factors 12.5 tons - GEHE150

Entering CFM	Cooling Capacity	Sensible Capacity	Cooling Input Watts	Heating Capacity	Heating Input Watts
4000	0.959	0.880	1.003	1.075	1.144
4500	0.981	0.940	1.003	0.987	1.040
5000	1.000	1.000	1.000	1.000	1.000
5500	1.016	1.059	0.999	1.011	0.968
6000	1.030	1.118	0.997	1.020	0.943

Table 137. Correction factors for variation in entering air temperature 12.5 tons, GEHE150

Cooling Entering Air WB°F	Cooling Capacity	Cooling Input Watts	Sensible vs. Entering Dry Bulb Multipliers					Heating Entering Air DB°F	Heating Capacity	Heating Input Watts
			65.6	70.6	75.6	80.6	85.6			
44.5	0.934	0.994	0.991	1.053	1.117	*	*	43	1.050	0.748
49.4	0.935	0.994	0.991	1.054	1.118	*	*	48	1.040	0.793
56.3	0.936	0.995	0.810	1.031	1.119	*	*	53	1.030	0.840
60.3	0.936	0.995	0.621	0.842	1.064	*	*	58	1.020	0.891
63.2	0.957	0.996	0.476	0.701	0.924	1.148	1.252	63	1.010	0.945
66.2	1.000	1.000	—	0.553	0.778	1.000	1.225	68	1.000	1.000
72.1	1.098	1.009	—	—	0.480	0.704	0.929	73	0.990	1.060
77.1	1.189	1.016	—	—	—	0.442	0.673	78	0.980	1.124

Note: * = Sensible equals total capacity

Table 138. Cooling capacities 12.5 tons (gross) - GEVE150

EWT	GPM	Gross Cap Mbtuh	Gross Sen Mbtuh	SHR	Comp Power kW	Reject Mbtuh	LWT	Feet Head
45	18.8	183.1	131.4	0.72	6.720	206.0	66.9	4.5
45	25.0	184.8	132.1	0.71	6.310	206.4	61.5	7.5
45	31.3	186.0	132.6	0.71	6.080	206.8	58.2	11.2
45	37.5	186.8	132.9	0.71	5.930	207.0	56.0	15.4
45	43.8	188.2	133.8	0.71	5.610	207.3	54.5	20.1
55	18.8	177.3	129.4	0.73	7.470	202.8	76.6	4.4
55	25.0	179.0	130.0	0.73	7.060	203.1	71.2	7.2
55	31.3	180.1	130.4	0.72	6.810	203.3	68.0	10.8
55	37.5	180.8	130.6	0.72	6.650	203.5	65.9	14.9
55	43.8	181.3	130.8	0.72	6.540	203.6	64.3	19.6
59	18.8	174.9	128.6	0.74	7.790	201.5	80.4	4.3
59	25.0	176.6	129.2	0.73	7.380	201.8	75.1	7.1
59	31.3	177.6	129.5	0.73	7.130	202.0	71.9	10.6
59	37.5	178.3	129.8	0.73	6.960	202.1	69.8	14.6
59	43.8	178.8	129.9	0.73	6.850	202.2	68.2	19.3
68	18.8	169.5	126.8	0.75	8.600	198.8	89.1	4.2
68	25.0	171.0	127.3	0.74	8.140	198.8	83.9	6.9
68	31.3	172.0	127.6	0.74	7.880	198.9	80.7	10.3
68	37.5	172.6	127.8	0.74	7.710	198.9	78.6	14.2
68	43.8	173.1	128.0	0.74	7.580	199.0	77.1	18.7
77	18.8	163.7	124.8	0.76	9.470	196.0	97.9	4.0
77	25.0	165.2	125.4	0.76	9.000	196.0	92.7	6.7
77	31.3	166.2	125.7	0.76	8.720	195.9	89.5	10
77	37.5	166.8	125.9	0.75	8.530	195.9	87.4	13.8
77	43.8	167.2	126.0	0.75	8.400	195.8	85.9	18.1
86	18.8	157.4	122.9	0.78	10.430	193.0	106.5	3.9
86	25.0	159.1	123.4	0.78	9.960	193.1	101.4	6.5
86	31.3	160.0	123.7	0.77	9.640	192.9	98.3	9.7

Table 138. Cooling capacities 12.5 tons (gross) - GEVE150 (continued)

EWT	GPM	Gross Cap Mbtuh	Gross Sen Mbtuh	SHR	Comp Power kW	Reject Mbtuh	LWT	Feet Head
86	37.5	160.6	123.9	0.77	9.460	192.8	96.3	13.4
86	43.8	161.0	124.0	0.77	9.320	192.8	94.8	17.6
95	18.8	150.5	120.1	0.80	11.460	189.6	115.2	3.8
95	25.0	152.1	121.1	0.80	10.950	189.5	110.2	6.4
95	31.3	152.8	120.9	0.79	10.660	189.2	107.1	9.5
95	37.5	153.6	121.3	0.79	10.470	189.3	105.1	13.0
95	43.8	154.3	121.8	0.79	10.320	189.5	103.7	17.1
105	18.8	142.5	117.7	0.83	12.691	185.8	124.8	3.7
105	25.0	144.1	118.1	0.82	12.178	185.6	119.9	6.2
105	31.3	145.0	118.3	0.82	11.871	185.5	116.9	9.2
105	37.5	145.7	118.6	0.81	11.670	185.5	114.9	12.7
105	43.8	146.0	118.7	0.81	11.522	185.3	113.5	16.7
115	18.8	133.5	114.8	0.86	14.028	181.4	134.3	3.6
115	25.0	135.4	115.3	0.85	13.513	181.5	129.5	6.0
115	31.3	136.3	115.7	0.85	13.197	181.4	126.6	9.0
115	37.5	137.0	116.0	0.85	12.986	181.3	124.7	12.4
115	43.8	137.4	116.1	0.85	12.834	181.2	123.3	16.2
120	37.5	132.2	114.4	0.87	13.689	178.9	129.5	12.2
120	43.8	133.1	114.7	0.86	13.543	179.3	128.2	16.0

Note: Performance data is tabulated for cooling at 80.6°F DB/66.2°F WB entering air. For conditions other than what is tabulated, multipliers must be used to correct performance. See the fan correction factors table for CFM other than rated and the cooling correction factors for variations in entering air temperature. WLHP data is performance data at ANSI/AHRI/ASHRAE/ISO13256-1. For ANSI/AHRI/ASHRAE/ISO13256-1 GLHP conditions, apply 15% methanol by volume per the antifreeze correction factors found in the performance correction tables. The minimum gpm/ton is 3.0 when the EWT is greater than 115°F and the EAT is less than 67°F WB. Rated GPM: 37.5 Minimum CFM 4000; Nominal CFM 5000, Maximum CFM 6000.

Table 139. Heating capacities 12.5 tons (gross) - GEVE150

EWT	GPM	Gross Cap Mbtuh	Absorb Mbtuh	Comp Power kW	LWT	Feet Head
25	31.3	106.0	76.8	8.54	20.1	12.6
25	37.5	107.2	78.0	8.54	20.8	17.3
25	43.8	108.3	79.1	8.56	21.4	22.6
32	18.8	111.2	81.9	8.60	23.3	5.1
32	25.0	114.8	85.4	8.63	25.2	8.3
32	31.3	116.5	87.0	8.62	26.4	12.3
32	37.5	118.1	88.6	8.65	27.3	16.8
32	43.8	119.1	89.6	8.65	27.9	22.0
45	18.8	131.3	101.2	8.83	34.2	4.9
45	25.0	135.4	105.1	8.87	36.6	8.1
45	31.3	138.0	107.7	8.88	38.1	11.9
45	37.5	139.5	109.2	8.89	39.2	16.3
45	43.8	140.7	110.4	8.90	40.0	21.4
50	18.8	142.2	111.5	8.99	38.1	4.8
50	25.0	146.7	115.9	9.05	40.7	7.8
50	31.3	149.4	118.5	9.07	42.4	11.6
50	37.5	151.0	120.0	9.08	43.6	15.9

Table 139. Heating capacities 12.5 tons (gross) - GEVE150 (continued)

EWT	GPM	Gross Cap Mbtuh	Absorb Mbtuh	Comp Power kW	LWT	Feet Head
50	43.8	151.9	120.9	9.08	44.5	20.8
55	18.8	150.8	119.7	9.12	42.3	4.7
55	25.0	155.9	124.5	9.18	45.0	7.7
55	31.3	158.6	127.2	9.21	46.9	11.4
55	37.5	160.1	128.7	9.22	48.1	15.5
55	43.8	161.3	129.8	9.22	49.1	20.4
68	18.8	174.1	141.7	9.49	52.9	4.5
68	25.0	180.1	147.4	9.56	56.2	7.3
68	31.3	183.6	150.9	9.59	58.4	10.8
68	37.5	185.7	152.9	9.61	59.8	14.8
68	43.8	186.9	154.1	9.62	61.0	19.4
75	18.8	187.3	154.2	9.70	58.6	4.4
75	25.0	194.0	160.6	9.79	62.2	7.2
75	31.3	198.1	164.5	9.83	64.5	10.6
75	37.5	200.4	166.8	9.86	66.1	14.5
75	43.8	201.5	167.9	9.84	67.3	19.0
86	18.8	209.0	174.6	10.06	67.4	4.2
86	25.0	217.2	182.4	10.18	71.4	6.9
86	31.3	222.0	187.1	10.25	74.0	10.2
86	37.5	224.5	189.4	10.27	75.9	14.0
86	43.8	225.7	190.6	10.27	77.3	18.3

Note: Performance data is tabulated for heating at 68°F DB entering air. For conditions other than what is tabulated, multipliers must be used to correct performance. See the fan correction factors table for CFM other than rated and the heating correction factors for variations in entering air temperature. WLHP data is performance data at ANSI/AHRI/ASHRAE/ISO13256-1. For ANSI/AHRI/ASHRAE/ISO13256-1 GLHP conditions, apply 15% methanol by volume per the antifreeze correction factors found in the performance correction tab. Rated GPM: 37.5 Minimum CFM 4000; Nominal CFM 5000, Maximum CFM 6000.

Table 140. Fan correction factors 12.5 tons - GEVE150

Entering CFM	Cooling Capacity	Sensible Capacity	Cooling Input Watts	Heating Capacity	Heating Input Watts
4000	0.958	0.873	0.998	0.980	1.086
4500	0.980	0.936	0.999	0.991	1.038
5000	1.000	1.000	1.000	1.000	1.000
5500	1.017	1.063	1.001	1.008	0.970
6000	1.032	1.127	1.001	1.017	0.947

Table 141. Correction factors for variation in entering air temperature 12.5 tons, GEVE150

Cooling Entering Air WB°F	Cooling Capacity	Cooling Input Watts	Sensible vs. Entering Dry Bulb Multipliers					Heating Entering Air DB°F	Heating Capacity	Heating Input Watts
			65.6	70.6	75.6	80.6	85.6			
44.5	0.936	0.994	1.018	1.081	1.147	*	*	43	1.056	0.763
49.4	0.937	0.994	1.018	1.214	1.147	*	*	48	1.047	0.807
56.3	0.938	0.994	0.809	1.047	1.149	*	*	53	1.035	0.851
60.3	0.938	0.994	0.603	0.841	1.077	*	*	58	1.023	0.897
63.2	0.961	0.996	0.449	0.683	0.924	1.162	*	63	1.015	0.951
66.2	1.000	1.000	—	0.522	0.758	1.000	1.240	68	1.000	1.000
72.1	1.088	1.008	—	—	0.431	0.672	0.908	73	0.987	1.054

Table 141. Correction factors for variation in entering air temperature 12.5 tons, GEVE150 (continued)

Cooling Entering Air WB°F	Cooling Capacity	Cooling Input Watts	Sensible vs. Entering Dry Bulb Multipliers					Heating Entering Air DB°F	Heating Capacity	Heating Input Watts
			65.6	70.6	75.6	80.6	85.6			
77.1	1.171	1.015	—	—	—	0.383	0.625	78	0.975	1.111

Note: * = Sensible equals total capacity

Cooling and Heating Capacities 15 tons

Table 142. Cooling capacities 15 tons (gross) - GEHE180

EWT	GPM	Gross Cap Mbtuh	Gross Sen Mbtuh	SHR	Comp Power kW	Reject Mbtuh	LWT	Feet Head
45	22.5	218.6	160.0	0.73	8.990	249.3	67.2	6.2
45	30.0	219.2	160.2	0.73	8.630	248.6	61.6	10.2
45	37.5	219.9	160.7	0.73	8.330	248.3	58.2	14.8
45	45.0	220.5	161.0	0.73	8.160	248.3	56.0	20.8
45	52.5	221.2	161.3	0.73	8.030	248.6	54.5	27.0
55	22.5	215.1	159.4	0.74	9.790	248.5	77.1	5.9
55	30.0	215.6	159.6	0.74	9.320	247.4	71.5	9.8
55	37.5	215.9	159.7	0.74	9.040	246.8	68.2	14.6
55	45.0	216.3	159.8	0.74	8.860	246.5	66.0	20.2
55	52.5	216.4	159.8	0.74	8.730	246.2	64.4	26.6
59	22.5	212.2	158.2	0.75	10.220	247.1	81.0	5.8
59	30.0	212.9	158.5	0.74	9.730	246.1	75.4	9.7
59	37.5	213.5	158.7	0.74	9.450	245.7	72.1	14.4
59	45.0	213.6	158.5	0.74	9.270	245.2	69.9	19.9
59	52.5	213.9	158.9	0.74	9.130	245.1	68.3	26.2
68	22.5	205.6	155.7	0.76	11.260	244.0	89.7	5.6
68	30.0	206.8	155.8	0.75	10.740	243.4	84.2	9.4
68	37.5	207.0	156.2	0.75	10.420	242.6	80.9	14.0
68	45.0	207.5	156.1	0.75	10.230	242.4	78.8	19.3
68	52.5	207.3	156.3	0.75	10.090	241.7	77.2	25.4
77	22.5	198.8	153.2	0.77	12.440	241.2	98.4	5.5
77	30.0	199.7	153.5	0.77	11.850	240.1	93.0	9.1
77	37.5	200.1	153.6	0.77	11.510	239.4	89.8	13.6
77	45.0	200.4	153.8	0.77	11.300	239.0	87.6	18.7
77	52.5	200.6	153.8	0.77	11.140	238.7	86.1	24.6
86	22.5	191.1	150.3	0.79	13.700	237.8	107.1	5.3
86	30.0	192.6	150.9	0.78	13.090	237.2	101.8	8.9
86	37.5	193.2	151.1	0.78	12.730	236.6	98.6	13.2
86	45.0	192.6	150.9	0.78	12.490	235.2	96.5	18.2
86	52.5	193.3	151.2	0.78	12.350	235.4	95.0	23.9
95	22.5	183.3	147.8	0.81	15.200	235.1	115.9	5.2
95	30.0	184.1	148.0	0.80	14.530	233.7	110.6	8.7
95	37.5	184.6	148.2	0.80	14.130	232.9	107.4	12.9
95	45.0	185.0	148.3	0.80	13.870	232.3	105.3	17.7

Table 142. Cooling capacities 15 tons (gross) - GEHE180 (continued)

EWT	GPM	Gross Cap Mbtuh	Gross Sen Mbtuh	SHR	Comp Power kW	Reject Mbtuh	LWT	Feet Head
95	52.5	185.2	148.3	0.80	13.700	231.9	103.8	23.3
105	22.5	174.0	144.8	0.83	17.109	232.4	125.7	5.1
105	30.0	174.9	145.1	0.83	16.361	230.7	120.4	8.4
105	37.5	175.3	145.2	0.83	15.925	229.7	117.2	12.5
105	45.0	175.6	145.3	0.83	15.659	229.1	115.2	17.2
105	52.5	175.8	145.4	0.83	15.46	228.6	113.7	22.6
115	22.5	164.0	141.8	0.86	19.355	230.1	135.5	4.9
115	30.0	164.7	141.9	0.86	18.532	227.9	130.2	8.2
115	37.5	165.5	142.3	0.86	18.060	227.1	127.1	12.2
115	45.0	165.7	142.4	0.86	17.758	226.3	125.1	16.8
115	52.5	165.8	142.3	0.86	17.538	225.6	123.6	22.0
120	45.0	160.1	140.5	0.88	18.972	224.8	130.0	16.6
120	52.5	160.4	140.6	0.88	18.741	224.3	128.5	21.8

Note: Performance data is tabulated for cooling at 80.6°F DB/66.2°F WB entering air. For conditions other than what is tabulated, multipliers must be used to correct performance. See the fan correction factors table for CFM other than rated and the cooling correction factors for variations in entering air temperature. WLHP data is performance data at ANSI/AHRI/ASHRAE/ISO13256-1. For ANSI/AHRI/ASHRAE/ISO13256-1 GLHP conditions, apply 15% methanol by volume per the antifreeze correction factors found in the performance correction tables. The minimum gpm/ton is 3.0 when the EWT is greater than 115°F and the EAT is less than 67°F WB. Rated GPM: 45.0 Minimum CFM 4800; Nominal CFM 6000, Maximum CFM 7200.

Table 143. Heating capacities 15 tons (gross) - GEHE180

EWT	GPM	Gross Cap Mbtuh	Absorb Mbtuh	Comp Power kW	LWT	Feet Head
25	45.0	133.1	99.1	9.98	20.6	23.6
25	52.5	133.9	99.8	9.99	21.2	30.9
32	22.5	138.7	104.2	10.11	22.7	6.9
32	30.0	142.6	107.8	10.18	24.8	11.3
32	37.5	144.3	109.5	10.20	26.2	16.7
32	45.0	145.9	111.0	10.22	27.1	22.9
32	52.5	146.3	111.5	10.21	27.8	30.0
45	22.5	161.7	125.6	10.56	33.8	6.7
45	30.0	166.5	130.2	10.65	36.3	11.0
45	37.5	169.2	132.7	10.70	37.9	16.3
45	45.0	170.7	134.1	10.73	39.0	22.3
45	52.5	171.6	134.9	10.74	39.9	29.2
50	22.5	175.2	138.1	10.86	37.7	6.5
50	30.0	179.9	142.5	10.94	40.5	10.7
50	37.5	182.3	144.8	10.99	42.3	15.8
50	45.0	183.5	145.9	11.02	43.5	21.7
50	52.5	184.2	146.5	11.03	44.4	28.3
55	22.5	185.4	147.6	11.08	41.9	6.4
55	30.0	190.7	152.4	11.20	44.8	10.5
55	37.5	193.3	154.9	11.26	46.7	15.5
55	45.0	194.6	156.1	11.29	48.1	21.3
55	52.5	195.4	156.9	11.30	49.0	27.8
68	22.5	214.2	173.9	11.80	52.5	6.1

Table 143. Heating capacities 15 tons (gross) - GEHE180 (continued)

EWT	GPM	Gross Cap Mbtuh	Absorb Mbtuh	Comp Power kW	LWT	Feet Head
68	30.0	220.6	179.8	11.96	56.0	10.0
68	37.5	223.9	182.8	12.03	58.3	14.8
68	45.0	225.9	184.7	12.07	59.8	20.3
68	52.5	226.9	185.6	12.10	60.9	26.5
75	22.5	230.8	189.1	12.23	58.2	6.0
75	30.0	238.4	196.1	12.41	61.9	9.8
75	37.5	243.0	200.2	12.54	64.3	14.4
75	45.0	244.2	201.3	12.58	66.1	19.8
75	52.5	244.9	201.9	12.60	67.3	25.9
86	22.5	258.1	213.8	12.97	67.0	5.8
86	30.0	266.8	221.8	13.18	71.2	9.5
86	37.5	271.5	226.0	13.33	73.9	13.9
86	45.0	273.5	227.8	13.39	75.9	19.1
86	52.5	274.2	228.3	13.43	77.3	25.0

Note: Performance data is tabulated for heating at 68°F DB entering air. For conditions other than what is tabulated, multipliers must be used to correct performance. See the fan correction factors table for CFM other than rated and the heating correction factors for variations in entering air temperature. WLHP data is performance data at ANSI/AHRI/ASHRAE/ISO13256-1. For ANSI/AHRI/ASHRAE/ISO13256-1 GLHP conditions, apply 15% methanol by volume per the antifreeze correction factors found in the performance correction tables. Rated GPM: 45.0 Minimum CFM 4800; Nominal CFM 6000, Maximum CFM 7200.

Table 144. Fan correction factors 15 tons - GEHE180

Entering CFM	Cooling Capacity	Sensible Capacity	Cooling Input Watts	Heating Capacity	Heating Input Watts
4800	0.960	0.877	1.002	0.978	1.080
5400	0.983	0.939	1.003	0.991	1.002
6000	1.000	1.000	1.000	1.000	1.000
6600	1.018	1.063	1.002	1.007	0.940
7200	1.034	1.126	1.003	1.011	0.917

Table 145. Correction factors for variation in entering air temperature 15 tons, GEHE180

Cooling Entering Air WB°F	Cooling Capacity	Cooling Input Watts	Sensible vs. Entering Dry Bulb Multipliers					Heating Entering Air DB°F	Heating Capacity	Heating Input Watts
			65.6	70.6	75.6	80.6	85.6			
44.5	0.940	0.985	1.004	1.067	1.132	*	*	43	1.052	0.783
49.4	0.941	0.985	1.005	1.068	1.133	*	*	48	1.041	0.821
56.3	0.942	0.986	0.808	1.038	1.135	*	*	53	1.032	0.862
60.3	0.943	0.986	0.607	0.839	1.072	*	*	58	1.021	0.907
63.2	0.962	0.991	0.461	0.689	0.923	1.158	*	63	1.011	0.953
66.2	1.000	1.000	—	0.536	0.766	1.000	1.238	68	1.000	1.000
72.1	1.094	1.022	—	—	0.457	0.687	0.922	73	0.986	1.051
77.1	1.185	1.038	—	—	—	0.419	0.648	78	0.972	1.103

Note: * = Sensible equals total capacity

Table 146. Cooling capacities 15 tons (gross) - GEVE180

EWT	GPM	Gross Cap Mbtuh	Gross Sen Mbtuh	SHR	Comp Power kW	Reject Mbtuh	LWT	Feet Head
45	22.5	221.9	156.8	0.71	8.710	251.6	67.4	6.1
45	30.0	222.5	157.2	0.71	8.260	250.7	61.7	10.2

Table 146. Cooling capacities 15 tons (gross) - GEVE180 (continued)

EWT	GPM	Gross Cap Mbtuh	Gross Sen Mbtuh	SHR	Comp Power kW	Reject Mbtuh	LWT	Feet Head
45	37.5	222.9	157.1	0.71	7.820	249.6	58.3	15.0
45	45.0	223.4	157.3	0.70	7.610	249.4	56.1	20.8
45	52.5	223.8	157.6	0.70	7.430	249.2	54.5	27.0
55	22.5	216.0	154.7	0.72	9.690	249.1	77.1	5.9
55	30.0	216.9	155.1	0.72	9.230	248.4	71.6	9.8
55	37.5	217.3	155.3	0.71	8.930	247.8	68.2	14.6
55	45.0	217.6	155.2	0.71	8.750	247.4	66.0	20.2
55	52.5	217.8	155.5	0.71	8.630	247.2	64.4	26.6
59	22.5	213.4	153.7	0.72	10.090	247.9	81.0	5.8
59	30.0	214.3	154.0	0.72	9.620	247.2	75.5	9.7
59	37.5	214.8	154.4	0.72	9.350	246.7	72.2	14.4
59	45.0	215.1	154.5	0.72	9.170	246.4	70.0	19.9
59	52.5	215.3	154.4	0.72	9.030	246.1	68.4	26.2
68	22.5	207.3	151.8	0.73	11.060	245.1	89.8	5.6
68	30.0	208.2	151.9	0.73	10.560	244.3	84.3	9.4
68	37.5	208.8	152.3	0.73	10.270	243.8	81.0	14
68	45.0	209.1	152.2	0.73	10.080	243.5	78.8	19.3
68	52.5	209.3	152.5	0.73	9.940	243.2	77.3	25.4
77	22.5	200.6	149.6	0.75	12.180	242.1	98.5	5.5
77	30.0	201.2	149.4	0.74	11.610	240.8	93.1	9.1
77	37.5	202.1	150.2	0.74	11.290	240.7	89.8	13.6
77	45.0	202.5	150.2	0.74	11.080	240.3	87.7	18.7
77	52.5	202.7	150.3	0.74	10.940	240.0	86.1	24.6
86	22.5	192.8	146.5	0.76	13.390	238.5	107.2	5.3
86	30.0	193.8	146.8	0.76	12.810	237.5	101.8	8.9
86	37.5	194.3	147.0	0.76	12.470	236.9	98.6	13.2
86	45.0	194.7	147.0	0.76	12.260	236.5	96.5	18.2
86	52.5	194.9	147.1	0.75	12.110	236.2	95.0	23.9
95	22.5	185.1	144.0	0.78	14.760	235.5	115.9	5.2
95	30.0	186.1	144.3	0.78	14.130	234.3	110.6	8.7
95	37.5	186.6	144.5	0.77	13.760	233.6	107.5	12.9
95	45.0	187.0	144.6	0.77	13.530	233.2	105.4	17.7
95	52.5	187.2	144.7	0.77	13.360	232.8	103.9	23.3
105	22.5	176.0	141.3	0.80	16.496	232.3	125.6	5.1
105	30.0	177.0	141.6	0.80	15.809	231.0	120.4	8.4
105	37.5	177.6	141.8	0.80	15.411	230.2	117.3	12.5
105	45.0	177.9	141.9	0.80	15.150	229.6	115.2	17.2
105	52.5	178.2	141.9	0.80	14.980	229.3	113.7	22.6
115	22.5	166.1	138.4	0.83	18.418	228.9	135.4	4.9
115	30.0	167.1	138.7	0.83	17.737	227.7	130.2	8.2
115	37.5	167.7	138.9	0.83	17.308	226.7	127.1	12.2

Table 146. Cooling capacities 15 tons (gross) - GEVE180 (continued)

EWT	GPM	Gross Cap Mbtuh	Gross Sen Mbtuh	SHR	Comp Power kW	Reject Mbtuh	LWT	Feet Head
115	45.0	168.0	139.0	0.83	17.026	226.1	125.1	16.8
115	52.5	168.2	139.1	0.83	16.828	225.7	123.6	22.0
120	45.0	162.6	137.3	0.84	18.090	224.4	130.0	16.6
120	52.5	162.9	137.4	0.84	17.881	223.9	128.5	21.8

Note: Performance data is tabulated for cooling at 80.6°F DB/66.2°F WB entering air. For conditions other than what is tabulated, multipliers must be used to correct performance. See the fan correction factors table for CFM other than rated and the cooling correction factors for variations in entering air temperature. WLHP data is performance data at ANSI/AHRI/ASHRAE/ISO13256-1. For ANSI/AHRI/ASHRAE/ISO13256-1 GLHP conditions, apply 15% methanol by volume per the antifreeze correction factors found in the performance correction tables. The minimum gpm/ton is 3.0 when the EWT is greater than 115°F and the EAT is less than 67°F WB. Rated GPM: 45.0 Minimum CFM 4800; Nominal CFM 6000, Maximum CFM 7200.

Table 147. Heating capacities 15 tons (gross) - GEVE180

EWT	GPM	Gross Cap Mbtuh	Absorb Mbtuh	Comp Power kW	LWT	Feet Head
25	45.0	132.2	98.1	9.99	20.6	23.6
25	52.5	133.2	99.1	10.01	21.2	30.9
32	22.5	137.3	102.7	10.13	22.9	6.9
32	30.0	141.0	106.1	10.20	24.9	11.3
32	37.5	143.6	108.6	10.25	26.2	16.7
32	45.0	144.8	109.8	10.26	27.1	22.9
32	52.5	145.9	110.8	10.28	27.8	30.0
45	22.5	160.8	124.5	10.63	33.9	6.7
45	30.0	165.4	128.8	10.71	36.4	11.0
45	37.5	168.5	131.7	10.77	38.0	16.3
45	45.0	170.3	133.4	10.81	39.1	22.3
45	52.5	171.4	134.5	10.84	39.9	29.2
50	22.5	173.3	136.0	10.93	37.9	6.5
50	30.0	178.7	141.0	11.03	40.6	10.7
50	37.5	181.7	143.8	11.09	42.3	15.8
50	45.0	183.5	145.4	11.14	43.5	21.7
50	52.5	184.5	146.5	11.15	44.4	28.3
55	22.5	183.6	145.5	11.16	42.1	6.4
55	30.0	189.5	150.9	11.30	44.9	10.5
55	37.5	192.8	154.0	11.37	46.8	15.5
55	45.0	194.6	155.7	11.41	48.1	21.3
55	52.5	195.4	156.5	11.42	49.0	27.8
68	22.5	211.7	171.2	11.88	52.8	6.1
68	30.0	219.1	177.9	12.07	56.1	10.0
68	37.5	223.2	181.6	12.18	58.3	14.8
68	45.0	225.3	183.6	12.22	59.8	20.3
68	52.5	227.3	185.5	12.25	60.9	26.5
75	22.5	227.8	185.7	12.32	58.5	6.0
75	30.0	236.7	194.0	12.53	62.1	9.8
75	37.5	241.4	198.2	12.66	64.4	14.4
75	45.0	244.1	200.7	12.73	66.1	19.8
75	52.5	245.5	201.9	12.77	67.3	25.9

Table 147. Heating capacities 15 tons (gross) - GEVE180 (continued)

EWT	GPM	Gross Cap Mbtuh	Absorb Mbtuh	Comp Power kW	LWT	Feet Head
86	22.5	254.7	210.2	13.06	67.3	5.8
86	30.0	264.8	219.2	13.35	71.4	9.5
86	37.5	270.3	224.3	13.48	74.0	13.9
86	45.0	273.3	227.0	13.57	75.9	19.1
86	52.5	274.6	228.1	13.61	77.3	25.0

Note: Performance data is tabulated for heating at 68°F DB entering air. For conditions other than what is tabulated, multipliers must be used to correct performance. See the fan correction factors table for CFM other than rated and the heating correction factors for variations in entering air temperature. WLHP data shown is performance data at ANSI/AHRI/ASHRAE/ISO13256-1. For ANSI/AHRI/ASHRAE/ISO13256-1 GLHP conditions, apply 15% methanol by volume per the antifreeze correction factors found in the performance correction tables. Rated GPM: 45.0 Minimum CFM 4800; Nominal CFM 6000, Maximum CFM 7200.

Table 148. Fan correction factors 15 tons - GEVE180

Entering CFM	Cooling Capacity	Sensible Capacity	Cooling Input Watts	Heating Capacity	Heating Input Watts
4800	0.955	0.877	1.004	0.976	1.083
5400	0.980	0.938	1.001	0.989	1.036
6000	1.000	1.000	1.000	1.000	1.000
6600	1.018	1.061	0.998	1.008	0.971
7200	1.032	1.123	0.997	1.016	0.947

Table 149. Correction factors for variation in entering air temperature 15 tons, GEVE180

Cooling Entering Air WB°F	Cooling Capacity	Cooling Input Watts	Sensible vs. Entering Dry Bulb Multipliers					Heating Entering Air DB°F	Heating Capacity	Heating Input Watts
			65.6	70.6	75.6	80.6	85.6			
44.5	0.938	0.995	1.041	1.105	1.172	*	*	48	1.052	0.783
49.4	0.938	0.995	1.041	1.105	1.173	*	*	53	1.043	0.822
56.3	0.939	0.995	0.814	1.055	1.176	*	*	58	1.033	0.865
60.3	0.940	0.995	0.601	0.841	1.087	*	*	63	1.025	0.908
63.2	0.965	0.994	0.444	0.683	0.923	1.174	*	68	1.011	0.951
66.2	1.000	1.000	—	0.517	0.758	1.000	1.253	73	1.000	1.000
72.1	1.095	1.004	—	—	0.423	0.677	0.903	78	0.987	1.049
77.1	1.174	1.010	—	—	—	0.377	0.643	83	0.975	1.102

Note: * = Sensible equals total capacity

Cooling and Heating Capacities 20 tons

Table 150. Cooling capacities 20 tons (gross) - GEVE240

EWT	GPM	Gross Cap Mbtuh	Gross Sen Mbtuh	SHR	Comp Power kW	Reject Mbtuh	LWT	Feet Head
45	30	296.8	219.9	0.74	9.960	330.8	67.1	4.7
45	40	298.7	220.8	0.74	9.400	330.8	61.5	7.9
45	50	299.5	220.7	0.74	9.110	330.6	58.2	11.5
45	60	301.5	221.7	0.74	8.820	331.6	56.1	16.2
45	70	303.2	222.2	0.73	8.590	332.5	54.5	20.8
55	30	288.5	217.3	0.75	11.230	326.9	76.8	4.5
55	40	290.6	218.1	0.75	10.650	326.9	71.3	7.6
55	50	291.9	218.5	0.75	10.300	327.0	68.1	11.3
55	60	292.7	218.8	0.75	10.070	327.1	65.9	15.6

Table 150. Cooling capacities 20 tons (gross) - GEVE240 (continued)

EWT	GPM	Gross Cap Mbtuh	Gross Sen Mbtuh	SHR	Comp Power kW	Reject Mbtuh	LWT	Feet Head
55	70	293.4	219.0	0.75	9.910	327.2	64.3	20.5
59	30	285.2	215.9	0.76	11.780	325.4	80.7	4.5
59	40	287.2	216.8	0.75	11.160	325.3	75.3	7.5
59	50	288.3	217.0	0.75	10.810	325.2	72.0	11.1
59	60	289.1	217.5	0.75	10.580	325.2	69.8	15.4
59	70	289.7	217.5	0.75	10.420	325.2	68.3	20.2
68	30	277.5	213.1	0.77	13.040	322.0	89.5	4.3
68	40	279.1	213.7	0.77	12.420	321.5	84.1	7.3
68	50	280.2	214.1	0.76	12.040	321.3	80.9	10.8
68	60	280.8	214.3	0.76	11.810	321.1	78.7	14.9
68	70	281.3	214.5	0.76	11.640	321.0	77.2	19.5
77	30	269.1	210.1	0.78	14.440	318.4	98.2	4.2
77	40	270.7	210.6	0.78	13.780	317.7	92.9	7.0
77	50	271.5	210.9	0.78	13.400	317.3	89.7	10.5
77	60	272.2	211.1	0.78	13.150	317.0	87.6	14.4
77	70	272.6	211.3	0.78	12.970	316.8	86.1	19.0
86	30	260.0	206.8	0.80	15.980	314.6	107.0	4.1
86	40	261.5	207.3	0.79	15.230	313.5	101.7	6.9
86	50	262.4	207.6	0.79	14.820	312.9	98.5	10.2
86	60	262.9	207.8	0.79	14.550	312.6	96.4	14.0
86	70	263.3	207.9	0.79	14.360	312.3	94.9	18.4
95	30	250.2	203.5	0.81	17.680	310.6	115.7	4.0
95	40	251.6	204.0	0.81	16.920	309.4	110.5	6.7
95	50	252.4	204.3	0.81	16.480	308.7	107.3	9.9
95	60	253.0	204.5	0.81	16.200	308.2	105.3	13.7
95	70	253.3	204.6	0.81	16.000	307.9	103.8	17.9
105	30	238.2	199.5	0.84	19.841	305.9	125.4	3.9
105	40	239.6	200.0	0.83	18.996	304.4	120.2	6.5
105	50	240.4	200.2	0.83	18.516	303.6	117.1	9.6
105	60	240.9	200.4	0.83	18.205	303.0	115.1	13.3
105	70	241.3	200.5	0.83	17.987	302.7	113.6	17.4
115	30	224.7	195.4	0.87	22.283	300.8	135.1	3.8
115	40	226.3	195.9	0.87	21.396	299.3	130.0	6.3
115	50	227.1	196.2	0.86	20.879	298.4	126.9	9.4
115	60	227.6	196.4	0.86	20.540	297.7	124.9	13.0
115	70	228.0	196.5	0.86	20.303	297.3	123.5	17.0
120	60	220.2	193.9	0.88	21.893	294.9	129.8	12.8
120	70	219.9	193.9	0.88	21.602	293.6	128.4	16.8

Note: Performance data is tabulated for cooling at 80.6°F DB/66.2°F WB entering air. For conditions other than what is tabulated, multipliers must be used to correct performance. See the fan correction factors table for CFM other than rated and the cooling correction factors for variations in entering air temperature. WLHP data shown is performance data at ANSI/AHRI/ASHRAE/ISO13256-1. For ANSI/AHRI/ASHRAE/ISO13256-1 GLHP conditions, apply 15% methanol by volume per the antifreeze correction factors found in the performance correction tables. The minimum gpm/ton is 3.0 when the EWT is greater than 115°F and the EAT is less than 67°F WB. Rated GPM: 60.0 Minimum CFM 6400; Nominal CFM 8000, Maximum CFM 9600.

Table 151. Heating capacities 20 tons (gross) - GEVE240

EWT	GPM	Gross Cap Mbtuh	Absorb Mbtuh	Comp Power kW	LWT	Feet Head
25	50	154.9	113.2	12.24	20.5	13.6
25	60	157.0	115.1	12.29	21.2	18.7
25	70	158.6	116.5	12.33	21.7	24.4
32	30	162.8	120.7	12.36	24.0	5.4
32	40	168.1	125.6	12.45	25.7	9.0
32	50	171.6	128.8	12.51	26.8	13.2
32	60	173.9	131.1	12.54	27.6	18.1
32	70	175.7	132.8	12.58	28.2	23.7
45	30	192.9	149.1	12.82	35.1	5.3
45	40	199.9	155.7	12.95	37.2	8.7
45	50	204.5	160.0	13.04	38.6	12.8
45	60	207.7	163.0	13.10	39.6	17.6
45	70	210.1	165.3	13.14	40.3	23.1
50	30	208.1	163.2	13.14	39.1	5.1
50	40	215.5	170.2	13.26	41.5	8.5
50	50	220.3	174.7	13.35	43.0	12.5
50	60	223.7	177.9	13.43	44.1	17.1
50	70	226.3	180.3	13.48	44.8	22.4
55	30	221.0	175.4	13.38	43.3	5.1
55	40	229.2	183.0	13.54	45.8	8.3
55	50	234.6	188.1	13.64	47.5	12.2
55	60	238.4	191.6	13.72	48.6	16.8
55	70	241.3	194.2	13.78	49.5	22
68	30	256.8	208.6	14.13	54.1	4.8
68	40	267.2	218.3	14.33	57.1	7.9
68	50	274.1	224.7	14.48	59.0	11.7
68	60	279.1	229.3	14.60	60.4	16.0
68	70	282.8	232.7	14.69	61.4	21.0
75	30	277.2	227.5	14.56	59.8	4.7
75	40	289.1	238.4	14.85	63.1	7.7
75	50	297.2	245.8	15.05	65.2	11.4
75	60	302.7	250.8	15.19	66.6	15.7
75	70	307.0	254.7	15.31	67.7	20.5
86	30	310.9	258.3	15.42	68.8	4.6
86	40	325.4	271.5	15.77	72.4	7.5
86	50	334.7	280.0	16.03	74.8	11.0
86	60	341.1	285.8	16.21	76.5	15.1
86	70	345.9	290.1	16.35	77.7	19.7

Note: Performance data is tabulated for heating at 68°F DB entering air. For conditions other than what is tabulated, multipliers must be used to correct performance. See the fan correction factors table for CFM other than rated and the heating correction factors for variations in entering air temperature. WLHP data shown is performance data at ANSI/AHRI/ASHRAE/ISO13256-1. For ANSI/AHRI/ASHRAE/ISO13256-1 GLHP conditions, apply 15% methanol by volume per the antifreeze correction factors found in the performance correction tables. Rated GPM: 60.0 Minimum CFM 6400; Nominal CFM 8000, Maximum CFM 9600.

Table 152. Fan correction factors 20 tons - GEVE240

Entering CFM	Cooling Capacity	Sensible Capacity	Cooling Input Watts	Heating Capacity	Heating Input Watts
6400	0.958	0.872	0.997	0.973	1.074
7200	0.981	0.936	0.998	0.988	1.031
8000	1.000	1.000	1.000	1.000	1.000
8800	1.017	1.065	1.001	1.010	0.975
9600	1.032	1.130	1.003	1.018	0.955

Table 153. Correction factors for variation in entering air temperature 20 tons, GEVE240

Cooling Entering Air WB°F	Cooling Capacity	Cooling Input Watts	Sensible vs. Entering Dry Bulb Multipliers					Heating Entering Air DB°F	Heating Capacity	Heating Input Watts
			65.6	70.6	75.6	80.6	85.6			
44.5	0.941	0.991	0.996	1.059	1.124	*	*	43	1.059	0.769
49.4	0.942	0.991	0.997	1.060	1.125	*	*	48	1.047	0.811
56.3	0.943	0.991	0.805	1.036	1.126	*	*	53	1.036	0.856
60.3	0.943	0.991	0.610	0.838	1.068	*	*	58	1.024	0.903
63.2	0.958	0.993	0.468	0.690	0.922	1.155	*	63	1.012	0.950
66.2	1.000	1.000	—	0.549	0.770	1.000	1.234	68	1.000	1.000
72.1	1.102	1.019	—	—	0.459	0.702	0.927	73	0.988	1.055
77.1	1.188	1.032	—	—	—	0.423	0.674	78	0.977	1.112

Note: * = Sensible equals total capacity

Cooling and Heating Capacities 25 tons

Table 154. Cooling capacities 25 tons (gross) - GEVE300

EWT	GPM	Gross Cap Mbtuh	Gross Sen Mbtuh	SHR	Comp Power kW	Reject Mbtuh	LWT	Feet Head
45	37.5	368.3	268.9	0.73	13.6	414.6	67.1	4.4
45	50.0	372.3	270.5	0.73	13.0	416.6	61.7	7.4
45	62.5	374.9	271.4	0.72	12.6	418.0	58.4	11.1
45	75.0	376.6	272.1	0.72	12.4	418.9	56.2	15.3
45	87.5	377.9	272.5	0.72	12.3	419.7	54.6	20.1
55	37.5	356.8	264.6	0.74	14.9	407.8	76.7	4.3
55	50.0	360.5	266.3	0.74	14.3	409.2	71.4	7.2
55	62.5	362.7	267.2	0.74	13.9	410.1	68.1	10.6
55	75.0	364.2	267.3	0.73	13.6	410.8	66.0	14.7
55	87.5	365.4	268.0	0.73	13.5	411.4	64.4	19.3
59	37.5	352.1	263.4	0.75	15.5	405.0	80.6	4.2
59	50.0	355.7	264.6	0.74	14.8	406.3	75.3	7.1
59	62.5	357.8	265.4	0.74	14.4	407.1	72.0	10.5
59	75.0	359.3	265.9	0.74	14.2	407.8	69.9	14.5
59	87.5	360.4	266.3	0.74	14.0	408.2	68.3	19.0
68	37.5	341.1	259.3	0.76	17.0	399.2	89.3	4.1
68	50.0	344.6	260.7	0.76	16.3	400.1	84.0	6.8
68	62.5	346.5	261.3	0.75	15.8	400.5	80.8	10.2
68	75.0	347.9	261.8	0.75	15.5	400.8	78.7	14.0

Table 154. Cooling capacities 25 tons (gross) - GEVE300 (continued)

EWT	GPM	Gross Cap Mbtuh	Gross Sen Mbtuh	SHR	Comp Power kW	Reject Mbtuh	LWT	Feet Head
68	87.5	348.8	262.1	0.75	15.3	401.1	77.2	18.4
77	37.5	329.5	255.2	0.77	18.6	393.0	98.0	4.0
77	50.0	332.8	256.5	0.77	17.8	393.6	92.7	6.6
77	62.5	334.8	257.2	0.77	17.4	394.0	89.6	9.9
77	75.0	336.0	257.7	0.77	17.1	394.3	87.5	13.6
77	87.5	336.9	257.9	0.77	16.9	394.5	86.0	17.9
86	37.5	317.1	251.0	0.79	20.5	387.0	106.6	3.9
86	50.0	320.4	252.1	0.79	19.6	387.2	101.5	6.5
86	62.5	322.3	252.7	0.78	19.1	387.4	98.4	9.6
86	75.0	323.4	253.1	0.78	18.7	387.3	96.3	13.2
86	87.5	324.3	253.5	0.78	18.5	387.5	94.9	17.4
95	37.5	303.9	246.7	0.81	22.4	380.4	115.3	3.8
95	50.0	307.1	247.7	0.81	21.5	380.6	110.2	6.3
95	62.5	309.0	248.3	0.80	21.0	380.7	107.2	9.3
95	75.0	310.2	248.7	0.80	20.7	380.8	105.2	12.9
95	87.5	311.0	249.0	0.80	20.5	380.8	103.7	16.9
105	37.5	288.2	241.9	0.84	24.9	373.0	124.9	3.7
105	50.0	291.4	242.9	0.83	23.9	373.1	119.9	6.1
105	62.5	293.2	243.4	0.83	23.4	373.0	116.9	9.1
105	75.0	294.4	243.8	0.83	23.0	373.0	114.9	12.5
105	87.5	295.3	244.0	0.83	22.8	373.0	113.5	16.5
115	37.5	270.7	236.8	0.87	27.5	364.7	134.5	3.6
115	50.0	274.1	237.8	0.87	26.6	364.9	129.6	6.0
115	62.5	276.1	238.3	0.86	26.0	364.8	126.7	8.9
115	75.0	277.3	238.7	0.86	25.6	364.8	124.7	12.2
115	87.5	278.1	239.0	0.86	25.4	364.7	123.3	16.0
120	75.0	267.9	236.0	0.88	27.1	360.3	129.6	12.1
120	87.5	268.8	236.2	0.88	26.8	360.2	128.2	15.8

Note: Performance data is tabulated for cooling at 80.6°F DB/66.2°F WB entering air. For conditions other than what is tabulated, multipliers must be used to correct performance. See the fan correction factors table for CFM other than rated and the cooling correction factors for variations in entering air temperature. WLHP data shown is performance data at ANSI/AHRI/ASHRAE/ISO13256-1. For ANSI/AHRI/ASHRAE/ISO13256-1 GLHP conditions, apply 15% methanol by volume per the antifreeze correction factors found found in the performance correction tables. The minimum gpm/ton is 3.0 when the EWT is greater than 115°F and the EAT is less than 67°F WB. Rated GPM: 75.0 Minimum CFM 8000; Nominal CFM 10000, Maximum CFM 12000.

Table 155. Heating capacities 25 tons (gross) - GEVE300

EWT	GPM	Gross Cap Mbtuh	Absorb Mbtuh	Comp Power kW	LWT	Feet Head
25	62.5	206.6	148.8	16.90	20.2	12.6
25	75.0	209.3	151.3	17.00	21.0	17.3
25	87.5	211.4	153.1	17.10	21.5	22.6
32	37.5	216.0	157.8	17.04	23.6	5.0
32	50.0	223.0	164.3	17.22	25.4	8.3
32	62.5	227.6	168.5	17.33	26.6	12.2
32	75.0	230.9	171.4	17.41	27.4	16.8
32	87.5	233.3	173.7	17.48	28.0	21.9

Table 155. Heating capacities 25 tons (gross) - GEVE300 (continued)

EWT	GPM	Gross Cap Mbtuh	Absorb Mbtuh	Comp Power kW	LWT	Feet Head
45	37.5	254.4	193.5	17.83	34.7	4.9
45	50.0	263.6	202.1	18.02	36.9	8.1
45	62.5	269.6	207.6	18.17	38.4	11.9
45	75.0	273.7	211.5	18.25	39.4	16.3
45	87.5	276.9	214.4	18.31	40.1	21.3
50	37.5	273.9	211.1	18.41	38.7	4.8
50	50.0	283.6	220.1	18.62	41.2	7.8
50	62.5	289.9	225.9	18.74	42.8	11.5
50	75.0	294.2	230.0	18.83	43.9	15.8
50	87.5	297.6	233.0	18.90	44.7	20.7
55	37.5	290.3	226.2	18.77	42.9	4.7
55	50.0	300.9	236.1	19.00	45.6	7.7
55	62.5	307.8	242.5	19.14	47.2	11.3
55	75.0	312.7	247.0	19.26	48.4	15.5
55	87.5	316.5	250.5	19.34	49.3	20.3
68	37.5	335.3	267.4	19.87	53.7	4.5
68	50.0	348.7	279.8	20.19	56.8	7.3
68	62.5	357.6	287.9	20.40	58.8	10.8
68	75.0	363.7	293.6	20.56	60.2	14.8
68	87.5	368.2	297.7	20.66	61.2	19.4
75	37.5	360.7	290.6	20.55	59.5	4.4
75	50.0	375.8	304.5	20.90	62.8	7.2
75	62.5	385.6	313.5	21.15	65.0	10.5
75	75.0	392.4	319.7	21.28	66.5	14.5
75	87.5	397.4	324.4	21.41	67.6	18.9
86	37.5	402.2	328.3	21.65	68.5	4.2
86	50.0	419.9	344.4	22.13	72.2	6.9
86	62.5	432.0	355.2	22.49	74.6	10.2
86	75.0	440.0	362.5	22.71	76.3	14.0
86	87.5	445.9	368.0	22.83	77.6	18.3

Note: Performance data is tabulated for heating at 68°F DB entering air. For conditions other than what is tabulated, multipliers must be used to correct performance. See the fan correction factors table for CFM other than rated and the heating correction factors for variations in entering air temperature. WLHP data shown is performance data at ANSI/AHRI/ASHRAE/ISO13256-1. For ANSI/AHRI/ASHRAE/ISO13256-1 GLHP conditions, apply 15% methanol by volume per the antifreeze correction factors found in the performance correction tables. Rated GPM: 75.0 Minimum CFM 8000; Nominal CFM 10000, Maximum CFM 12000.

Table 156. Fan correction factors 25 tons - GEVE300

Entering CFM	Cooling Capacity	Sensible Capacity	Cooling Input Watts	Heating Capacity	Heating Input Watts
8000	0.958	0.872	0.997	0.973	1.074
9000	0.981	0.936	0.998	0.988	1.031
10000	1.000	1.000	1.000	1.000	1.000
11000	1.017	1.065	1.001	1.010	0.975
12000	1.032	1.13	1.003	1.018	0.955

Table 157. Correction factors for variation in entering air temperature 25 tons, GEVE300

Cooling Entering Air WB°F	Cooling Capacity	Cooling Input Watts	Sensible vs. Entering Dry Bulb Multipliers					Heating Entering Air DB°F	Heating Capacity	Heating Input Watts
			65.6	70.6	75.6	80.6	85.6			
44.5	0.939	0.993	1.014	1.075	1.137	*	*	43	1.059	0.775
49.4	0.940	0.993	1.015	1.076	1.138	*	*	48	1.048	0.816
56.3	0.941	0.992	0.812	1.047	1.139	*	*	53	1.035	0.857
60.3	0.942	0.993	0.606	0.841	1.077	*	*	58	1.023	0.901
63.2	0.962	0.994	0.457	0.688	0.923	1.161	*	63	1.011	0.949
66.2	1.000	1.000	—	0.532	0.764	1.000	1.237	68	1.000	1.000
72.1	1.093	1.012	—	—	0.452	0.687	0.919	73	0.988	1.053
77.1	1.177	1.024	—	—	—	0.421	0.653	78	0.977	1.109

Note: * = Sensible equals total capacity

Unit Fan Performance

Table 158. Fan performance for standard static motor (includes wet coils and 1” filter)

Model Number		Max cfm	Min cfm	External Static Pressure (in. of wg)										
				0.00	0.05	0.10	0.15	0.20	0.25	0.30	0.35	0.40	0.45	0.50
GEHE006	High	258		—	—	—	—	—	—	—	—	—	—	258
GEHE006	Med			—	—	—	—	—	—	—	266	253	239	222
GEHE006	Low		172	—	—	—	—	—	263	249	235	222	208	191
GEHE009	High	342		—	—	—	—	345	330	316	302	289	275	258
GEHE009	Med			—	356	341	325	309	294	280	266	253	239	222
GEHE009	Low		228	342	325	310	294	278	263	249	235	222	—	—
GEHE012	High	456		—	—	—	—	—	—	—	—	—	—	—
GEHE012	Med			—	—	—	—	—	459	451	447	446	446	443
GEHE012	Low		304	—	—	464	453	441	431	423	419	418	418	415
GEHE015	High	550		550	537	526	515	503	493	485	481	480	480	477
GEHE015	Med			516	503	492	481	469	459	451	447	446	446	443
GEHE015	Low		380	488	475	464	453	441	431	423	419	418	418	415
GEHE018	High	684		—	—	688	675	664	649	633	612	587	560	522
GEHE018	Med			657	652	644	633	621	605	587	568	543	512	475
GEHE018	Low		456	632	624	615	604	592	578	561	540	513	481	431
GEHE024	High	912		—	—	—	—	—	922	903	883	860	833	802
GEHE024	Med			915	901	891	879	866	851	835	819	801	779	751
GEHE024	Low		608	827	819	806	793	780	769	756	741	723	701	674
GEHE030	High	1009		1009	988	971	955	939	922	903	883	860	833	802
GEHE030	Med			915	901	891	879	866	851	835	819	801	779	751
GEHE030	Low		720	827	819	806	793	780	769	756	741	723	701	—
GEHE035	High	1368		—	—	—	—	—	1381	1366	1351	1334	1315	1295
GEHE035	Med			1221	1218	1216	1211	1206	1199	1190	1181	1170	1159	1146
GEHE035	Low		912	1099	1094	1090	1087	1083	1079	1075	1069	1062	1052	1040
GEHE042	High	1436		1436	1427	1417	1406	1394	1381	1366	1351	1334	1315	1295
GEHE042	Med			1221	1218	1216	1211	1206	1199	1190	1181	1170	1159	1146
GEHE042	Low		1064	1099	1094	1090	1087	1083	1079	1075	1069	1062	—	—
GEHE048	High	1824		1850	1786	1732	1686	1646	1608	1572	1536	1499	1459	1417
GEHE048	Med			1783	1724	1675	1632	1595	1560	1526	1491	1455	1417	1376
GEHE048	Low		1216	1687	1639	1598	1562	1530	1499	1467	1434	1399	1362	1321
GEHE060	High	2226		2266	2246	2221	2194	2165	2133	2099	2063	2024	1984	1943
GEHE060	Med			2056	2036	2011	1984	1955	1923	1889	1853	1814	1774	1733
GEHE060	Low		1520	1883	1863	1838	1811	1782	1750	1716	1680	1641	1601	1560
Model Number		Max cfm	Min cfm	External Static Pressure (in. of wg)										
				0.55	0.6	0.65	0.70	0.75	0.80	0.85	0.90	0.95	1.00	1.05
GEHE006	High	258		236	205	161	—	—	—	—	—	—	—	—
GEHE006	Med			200	169	—	—	—	—	—	—	—	—	—
GEHE006	Low		172	169	—	—	—	—	—	—	—	—	—	—
GEHE009	High	342		236	205	—	—	—	—	—	—	—	—	—

Table 158. Fan performance for standard static motor (includes wet coils and 1” filter) (continued)

Model Number		Max cfm	Min cfm	External Static Pressure (in. of wg)										
				0.55	0.6	0.65	0.70	0.75	0.80	0.85	0.90	0.95	1.00	1.05
GEHE009	Med			—	—	—	—	—	—	—	—	—	—	—
GEHE009	Low		228	—	—	—	—	—	—	—	—	—	—	—
GEHE012	High	456		462	424	347	211	—	—	—	—	—	—	—
GEHE012	Med			428	390	313	177	—	—	—	—	—	—	—
GEHE012	Low		304	400	362	285	—	—	—	—	—	—	—	—
GEHE015	High	550		462	424	347	—	—	—	—	—	—	—	—
GEHE015	Med			428	390	313	—	—	—	—	—	—	—	—
GEHE015	Low		380	400	362	—	—	—	—	—	—	—	—	—
GEHE018	High	684		457	427	—	—	—	—	—	—	—	—	—
GEHE018	Med			429	—	—	—	—	—	—	—	—	—	—
GEHE018	Low		456	—	—	—	—	—	—	—	—	—	—	—
GEHE024	High	912		766	723	675	623	572	—	—	—	—	—	—
GEHE024	Med			715	670	621	577	—	—	—	—	—	—	—
GEHE024	Low		608	642	605	—	—	—	—	—	—	—	—	—
GEHE030	High	1009		766	723	675	—	—	—	—	—	—	—	—
GEHE030	Med			715	—	—	—	—	—	—	—	—	—	—
GEHE030	Low		720	—	—	—	—	—	—	—	—	—	—	—
GEHE035	High	1368		1272	1247	1219	1187	1152	1112	1068	1018	963	901	—
GEHE035	Med			1132	1116	1096	1073	1044	1010	969	922	867	—	—
GEHE035	Low		912	1025	1007	985	958	927	890	—	—	—	—	—
GEHE042	High	1436		1272	1247	1219	1187	1152	1112	1068	1018	—	—	—
GEHE042	Med			1132	1116	1096	1073	1044	—	—	—	—	—	—
GEHE042	Low		1064	—	—	—	—	—	—	—	—	—	—	—
GEHE048	High	1824		1371	1323	1272	1216	—	—	—	—	—	—	—
GEHE048	Med			1332	1285	1216	—	—	—	—	—	—	—	—
GEHE048	Low		1216	1278	1216	—	—	—	—	—	—	—	—	—
GEHE060	High	2226		1899	1854	1808	1761	1712	1664	1615	1566	1517	—	—
GEHE060	Med			1689	1644	1598	1551	1502	—	—	—	—	—	—
GEHE060	Low		1520	1516	—	—	—	—	—	—	—	—	—	—

Table 159. Fan performance for high static motor (includes wet coil and 1” filter)

Model Number		Max cfm	Min cfm	External Static Pressure (in. of wg)										
				0.00	0.05	0.10	0.15	0.20	0.25	0.30	0.35	0.40	0.45	0.50
GEHE006	High	258		—	—	—	—	—	—	—	—	—	—	—
GEHE006	Med			—	—	—	—	—	—	—	—	—	—	258
GEHE006	Low		172	—	—	—	—	—	—	—	266	253	239	222
GEHE009	High	342		—	—	—	—	—	—	—	345	332	318	301
GEHE009	Med			—	—	—	—	345	330	316	302	289	275	258
GEHE009	Low		228	—	356	341	325	309	294	280	266	253	239	222
GEHE012	High	456		—	—	—	—	—	—	—	—	—	—	—

Table 159. Fan performance for high static motor (includes wet coil and 1” filter) (continued)

Model Number		Max cfm	Min cfm	External Static Pressure (in. of wg)										
				0.00	0.05	0.10	0.15	0.20	0.25	0.30	0.35	0.40	0.45	0.50
GEHE012	Med			—	—	—	—	—	—	—	—	—	—	—
GEHE012	Low		304	—	—	—	—	—	459	451	447	446	446	443
GEHE015	High	570		—	—	552	541	529	519	511	507	506	506	503
GEHE015	Med			550	537	526	515	503	493	485	481	480	480	477
GEHE015	Low		380	516	503	492	481	469	459	451	447	446	446	443
GEHE018	High	684		—	—	—	—	—	—	—	—	—	—	—
GEHE018	Med			—	—	—	—	—	—	—	—	—	—	705
GEHE018	Low		456	—	—	—	—	—	—	—	—	—	708	668
GEHE024	High	912		—	—	—	—	—	—	—	—	935	906	875
GEHE024	Med			—	—	—	—	—	922	903	883	860	833	802
GEHE024	Low		608	915	901	891	879	866	851	835	819	801	779	751
GEHE030	High	1080		—	1097	1074	1053	1033	1011	988	962	935	906	875
GEHE030	Med			1009	988	971	955	939	922	903	883	860	833	802
GEHE030	Low		720	915	901	891	879	866	851	835	819	801	779	751
GEHE035	High	1368		—	—	—	—	—	—	—	—	—	—	—
GEHE035	Med			—	—	—	—	—	1381	1366	1351	1334	1315	1295
GEHE035	Low		912	1221	1218	1216	1211	1206	1199	1190	1181	1170	1159	1146
GEHE042	High	1596		—	1605	1585	1566	1548	1531	1512	1493	1472	1449	1424
GEHE042	Med			1436	1427	1417	1406	1394	1381	1366	1351	1334	1315	1295
GEHE042	Low		1064	1221	1218	1216	1211	1206	1199	1190	1181	1170	1159	1146
GEHE048	High	1824		—	—	—	—	—	—	—	—	—	—	—
GEHE048	Med			—	—	—	—	—	—	—	—	—	—	—
GEHE048	Low		1216	—	—	—	—	—	—	—	1853	1814	1774	1733
GEHE060	High	2280		—	—	2291	2264	2235	2203	2169	2133	2094	2054	2013
GEHE060	Med			2266	2246	2221	2194	2165	2133	2099	2063	2024	1984	1943
GEHE060	Low		1520	2056	2036	2011	1984	1955	1923	1889	1853	1814	1774	1733
Model Number		**Max cfm**	**Min cfm**	**External Static Pressure (in. of wg)**										
				0.55	**0.60**	**0.65**	**0.70**	**0.75**	**0.80**	**0.85**	**0.90**	**0.95**	**1.00**	**1.05**
GEHE006	High	258		279	248	204	143	—	—	—	—	—	—	—
GEHE006	Med			236	205	161	100	—	—	—	—	—	—	—
GEHE006	Low		172	200	169	125	—	—	—	—	—	—	—	—
GEHE009	High	342		279	248	204	—	—	—	—	—	—	—	—
GEHE009	Med			236	205	—	—	—	—	—	—	—	—	—
GEHE009	Low		228	—	—	—	—	—	—	—	—	—	—	—
GEHE012	High	456		488	450	373	237	—	—	—	—	—	—	—
GEHE012	Med			462	424	347	211	—	—	—	—	—	—	—
GEHE012	Low		304	428	390	313	177	—	—	—	—	—	—	—
GEHE015	High	570		488	450	373	237	—	—	—	—	—	—	—
GEHE015	Med			462	424	347	—	—	—	—	—	—	—	—
GEHE015	Low		380	428	390	313	—	—	—	—	—	—	—	—

Table 159. Fan performance for high static motor (includes wet coil and 1” filter) (continued)

Model Number		Max cfm	Min cfm	External Static Pressure (in. of wg)										
				0.55	0.60	0.65	0.70	0.75	0.80	0.85	0.90	0.95	1.00	1.05
GEHE018	High	684		725	676	623	566	503	431	—	—	—	—	—
GEHE018	Med			657	608	556	504	450	—	—	—	—	—	—
GEHE018	Low		456	626	580	533	483	431	—	—	—	—	—	—
GEHE024	High	912		841	802	755	695	615	504	—	—	—	—	—
GEHE024	Med			766	723	675	623	572	—	—	—	—	—	—
GEHE024	Low		608	715	670	621	577	—	—	—	—	—	—	—
GEHE030	High	1080		841	802	755	695	—	—	—	—	—	—	—
GEHE030	Med			766	723	675	—	—	—	—	—	—	—	—
GEHE030	Low		720	715	—	—	—	—	—	—	—	—	—	—
GEHE035	High	1368		1396	1364	1329	1291	1249	1203	1154	1100	1042	979	—
GEHE035	Med			1272	1247	1219	1187	1152	1112	1068	1018	963	901	—
GEHE035	Low		912	1132	1116	1096	1073	1044	1010	969	922	867	—	—
GEHE042	High	1596		1396	1364	1329	1291	1249	1203	1154	1100	1042	—	—
GEHE042	Med			1272	1247	1219	1187	1152	1112	1068	1018	—	—	—
GEHE042	Low		1064	1132	1116	1096	1073	1044	—	—	—	—	—	—
GEHE048	High	1824		—	—	—	1831	1782	1734	1684	1636	1587	1540	—
GEHE048	Med			—	1854	1808	1761	1712	1664	1615	1566	1517	1470	—
GEHE048	Low		1216	1689	1644	1598	1551	1502	1454	1405	1356	1307	1260	—
GEHE060	High	2280		1969	1924	1878	1831	1782	1734	1684	1636	1587	1540	—
GEHE060	Med			1899	1854	1808	1761	1712	1664	1615	1566	1517	—	—
GEHE060	Low		1520	1689	1644	1598	1551	1502	—	—	—	—	—	—

Table 160. Fan performance for GEHE048 high static motor (includes wet coil and 1” filter)

Model Number		Max cfm	Min cfm	External Static Pressure (in. of wg)						
				1.10	1.15	1.20	1.25	1.30	1.35	1.40
GEHE048	High	1824		1448	1404	1362	1321	1281	1242	1201
GEHE048	Med			1378	1334	1292	1251	1211	—	—
GEHE048	Low		1216	—	—	—	—	—	—	—

ECM Control Board

Vertical - Units with Deluxe 24V or Tracer® ZN524 controls

For vertical sizes GEVG006-060, the ECM is programmed for constant torque and delivers airflow similar to a PSC motor while operating at a higher efficiency.

Figure 13. ECM control board

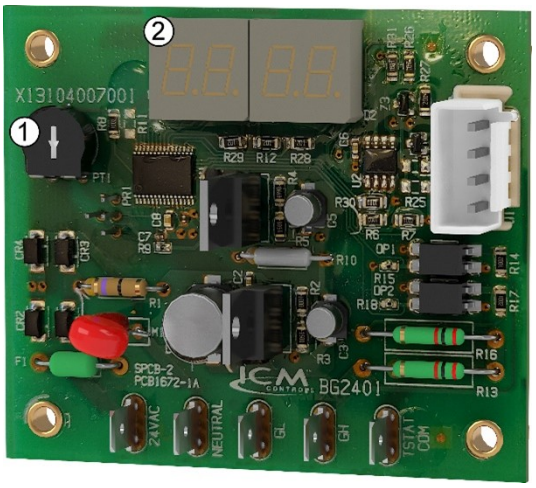

1. Potentiometer will be used to adjust the PWM output
2. Seven segment display

Using a screwdriver, the potentiometer will be used to adjust the PWM output from 20% to 100% PWM. Increasing the PWM will increase the motor speed. When setting the airflow for air balancing, the high-speed terminal (GH) must have 24VAC signal. This will ensure that the PWM output will be adjusted for the full load airflow.

The display will show the commanded motor speed percentage. If running on low speed (GL), the low-speed value will be displayed. If running in GH the high-speed value will be displayed. If both GH and GL input signals are present, the PWM output value will be the GH value.

Note: *ECM control board is only on units with Deluxe 24V and Tracer® ZN524 controls. Tracer® TU is used to adjust fan speed on units with UC400-B controls.*

Table 161. Fan performance GEVG006

External Static Pressure												
	0.00		0.05		0.10		0.15		0.20		0.25	
CFM	**kW**	**RPM**	**kW**	**RPM**	**kW**	**RPM**	**kW**	**RPM**	**kW**	**RPM**	**kW**	**RPM**
127	0.014	401	0.015	468	0.017	533	0.019	594	0.021	653	0.024	710
133	0.014	403	0.015	471	0.017	535	0.020	596	0.022	655	0.024	711
143	0.014	409	0.016	475	0.018	539	0.020	600	0.023	658	0.025	714
152	0.014	414	0.016	480	0.018	544	0.021	604	0.023	662	0.026	717
162	0.014	421	0.016	487	0.019	550	0.021	609	0.024	667	0.027	721
171	0.014	428	0.017	493	0.019	556	0.022	615	0.025	672	0.028	726
181	0.015	437	0.017	501	0.020	563	0.023	622	0.026	678	0.030	732
190	0.015	445	0.018	509	0.021	570	0.024	629	0.028	684	0.031	738
200	0.016	455	0.019	519	0.022	579	0.026	637	0.029	692	0.033	745
209	0.016	465	0.020	528	0.023	588	0.027	645	0.031	700	0.034	752
228	0.018	487	0.022	549	0.026	608	0.030	664	0.034	717	0.038	769
External Static Pressure												
	0.30		0.35		0.40		0.45		0.50		0.55	
CFM	**kW**	**RPM**	**kW**	**RPM**	**kW**	**RPM**	**kW**	**RPM**	**kW**	**RPM**	**kW**	**RPM**
127	0.027	764	0.029	816	0.032	866	0.036	914	0.039	960	0.043	1005
133	0.027	765	0.030	817	0.033	866	0.036	914	0.040	960	0.044	1004

Table 161. Fan performance GEVG006 (continued)

External Static Pressure												
143	0.028	767	0.031	818	0.034	868	0.038	915	0.041	960	0.045	1004
152	0.029	770	0.032	821	0.036	870	0.039	916	0.043	962	0.047	1005
162	0.030	774	0.034	824	0.037	872	0.041	919	0.045	964	0.049	1007
171	0.032	778	0.035	828	0.039	876	0.042	922	0.046	966	0.050	1009
181	0.033	783	0.037	833	0.041	880	0.044	926	0.048	969	0.052	1012
190	0.035	789	0.038	838	0.042	885	0.046	930	0.050	973	0.055	1015
200	0.037	796	0.040	844	0.044	890	0.048	935	0.053	978	0.057	1019
209	0.038	802	0.042	850	0.046	896	0.051	940	0.055	982	0.059	1023
228	0.043	818	0.047	865	0.051	910	0.056	953	0.060	994	0.065	1034
External Static Pressure												
	0.60		0.65		0.70		0.75		0.80		0.85	
CFM	**kW**	**RPM**	**kW**	**RPM**	**kW**	**RPM**	**kW**	**RPM**	**kW**	**RPM**	**kW**	**RPM**
127	0.047	1048	0.051	1089	0.055	1130	0.060	1170	0.065	1208	0.070	1246
133	0.048	1047	0.052	1089	0.056	1129	0.061	1168	0.066	1207	0.071	1244
143	0.049	1047	0.054	1088	0.058	1128	0.063	1167	0.067	1205	0.072	1242
152	0.051	1047	0.055	1088	0.060	1127	0.064	1166	0.069	1204	0.074	1241
162	0.053	1048	0.057	1089	0.062	1128	0.066	1166	0.071	1203	0.076	1240
171	0.055	1050	0.059	1090	0.063	1129	0.068	1166	0.073	1203	0.078	1240
181	0.057	1052	0.061	1092	0.066	1130	0.070	1168	0.075	1204	0.080	1240
190	0.059	1055	0.063	1094	0.068	1132	0.073	1169	0.077	1205	0.082	1241
200	0.061	1059	0.066	1098	0.070	1135	0.075	1172	0.080	1207	0.085	1242
209	0.064	1063	0.068	1101	0.073	1138	0.078	1174	0.083	1210	0.088	1244
228	0.069	1073	0.074	1110	0.079	1146	0.084	1181	0.088	1216	0.093	1250
External Static Pressure												
	0.90		0.95		1.00		1.05					
CFM	**kW**	**RPM**	**kW**	**RPM**	**kW**	**RPM**	**kW**	**RPM**				
127	0.075	1283	0.081	1320	0.086	1357	0.092	1393				
133	0.076	1281	0.081	1318	0.087	1354	0.093	1391				
143	0.078	1279	0.083	1315	0.089	1351	0.094	1387				
152	0.079	1277	0.085	1313	0.090	1349	0.096	1384				
162	0.081	1276	0.086	1311	0.092	1347	0.098	1382				
171	0.083	1275	0.088	1310	0.094	1345	-	-				
181	0.085	1275	0.091	1310	0.096	1345	-	-				
190	0.088	1276	0.093	1310	0.098	1345	-	-				
200	0.090	1277	0.095	1311	-	-	-	-				
209	0.093	1278	0.098	1312	-	-	-	-				
228	-	-	-	-	-	-	-	-				

Table 162. Fan performance GEVG009

External Static Pressure												
	0.00		0.05		0.10		0.15		0.20		0.25	
CFM	kW	RPM	kW	RPM	kW	RPM	kW	RPM	kW	RPM	kW	RPM
191	0.015	446	0.018	510	0.021	571	0.024	629	0.028	685	0.031	738
200	0.016	455	0.019	519	0.022	579	0.026	637	0.029	692	0.033	745
214	0.017	471	0.020	533	0.024	593	0.028	650	0.032	704	0.035	756
228	0.018	487	0.022	549	0.026	608	0.030	664	0.034	717	0.038	769
242	0.020	505	0.024	566	0.028	624	0.033	679	0.037	732	0.041	782
257	0.022	525	0.027	585	0.031	642	0.036	697	0.041	749	0.045	798
271	0.024	545	0.029	604	0.034	660	0.039	714	0.044	765	0.049	814
285	0.027	566	0.032	624	0.037	680	0.043	732	0.048	783	0.053	831
299	0.029	588	0.035	645	0.041	700	0.046	752	0.052	801	0.058	848
314	0.033	613	0.039	669	0.045	722	0.051	773	0.057	821	0.063	867
342	0.040	660	0.047	714	0.053	766	0.060	815	0.067	861	0.073	906
External Static Pressure												
	0.30		0.35		0.40		0.45		0.50		0.55	
CFM	kW	RPM	kW	RPM	kW	RPM	kW	RPM	kW	RPM	kW	RPM
191	0.035	789	0.039	838	0.043	885	0.046	930	0.051	973	0.055	1015
200	0.037	796	0.040	844	0.044	890	0.048	935	0.053	978	0.057	1019
214	0.039	806	0.043	854	0.048	899	0.052	943	0.056	985	0.061	1026
228	0.043	818	0.047	865	0.051	910	0.056	953	0.060	994	0.065	1034
242	0.046	831	0.050	877	0.055	921	0.060	963	0.064	1004	0.069	1043
257	0.050	845	0.055	891	0.059	934	0.064	976	0.069	1016	0.074	1054
271	0.054	860	0.059	905	0.064	947	0.069	988	0.074	1027	0.079	1065
285	0.058	876	0.064	920	0.069	962	0.074	1002	0.079	1040	0.084	1077
299	0.063	893	0.069	936	0.074	977	0.079	1016	0.085	1053	0.090	1089
314	0.068	911	0.074	953	0.080	993	0.085	1032	0.091	1068	0.097	1104
342	0.079	948	0.086	988	0.092	1026	0.098	1063	0.104	1098	0.110	1132
External Static Pressure												
	0.60		0.65		0.70		0.75		0.80		0.85	
CFM	kW	RPM	kW	RPM	kW	RPM	kW	RPM	kW	RPM	kW	RPM
191	0.059	1055	0.064	1095	0.068	1132	0.073	1169	0.078	1206	0.083	1241
200	0.061	1059	0.066	1098	0.070	1135	0.075	1172	0.080	1207	0.085	1242
214	0.065	1065	0.070	1103	0.074	1140	0.079	1176	0.084	1211	0.089	1246
228	0.069	1073	0.074	1110	0.079	1146	0.084	1181	0.088	1216	0.093	1250
242	0.074	1081	0.078	1118	0.083	1153	0.088	1188	0.093	1222	0.098	1255
257	0.079	1091	0.084	1127	0.089	1162	0.094	1196	0.099	1229	0.104	1261
271	0.084	1101	0.089	1137	0.094	1171	0.099	1204	0.104	1236	0.109	1268
285	0.089	1112	0.095	1147	0.100	1180	0.105	1213	0.110	1245	0.115	1276
299	0.095	1124	0.101	1158	0.106	1191	0.111	1222	0.116	1254	0.121	1284
314	0.102	1138	0.107	1170	0.113	1202	0.118	1233	0.123	1264	0.128	1293
342	0.116	1164	0.121	1195	0.127	1226	0.132	1255	0.138	1284	0.143	1312

Table 162. Fan performance GEVG009 (continued)

External Static Pressure								
	0.90		0.95		1.00		1.05	
CFM	kW	RPM	kW	RPM	kW	RPM	kW	RPM
191	0.088	1276	0.093	1310	0.098	1345	0.104	1379
200	0.090	1277	0.095	1311	0.101	1345	0.106	1379
214	0.094	1279	0.099	1313	0.105	1346	0.110	1380
228	0.099	1283	0.104	1316	0.109	1349	0.114	1382
242	0.103	1288	0.108	1320	0.114	1352	0.119	1384
257	0.109	1293	0.114	1325	0.119	1357	0.124	1388
271	0.114	1300	0.119	1331	0.124	1362	0.130	1393
285	0.120	1307	0.125	1337	0.130	1367	0.135	1398
299	0.126	1314	0.131	1344	0.137	1374	-	-
314	0.134	1323	0.139	1352	0.144	1381	-	-
342	0.148	1340	0.153	1368	-	-	-	-

Table 163. Fan performance GEVG012

External Static Pressure												
	0.00		0.05		0.10		0.15		0.20		0.25	
CFM	kW	RPM	kW	RPM	kW	RPM	kW	RPM	kW	RPM	kW	RPM
255	0.022	522	0.026	582	0.031	640	0.035	694	0.040	746	0.045	796
266	0.023	538	0.028	597	0.033	654	0.038	708	0.043	759	0.048	808
285	0.027	566	0.032	624	0.037	680	0.043	732	0.048	783	0.053	831
304	0.030	596	0.036	653	0.042	707	0.048	759	0.054	808	0.059	854
323	0.035	628	0.041	683	0.048	736	0.054	786	0.060	834	0.066	880
342	0.040	660	0.047	714	0.053	766	0.060	815	0.067	861	0.073	906
361	0.045	694	0.053	747	0.060	797	0.067	845	0.074	890	0.081	933
380	0.051	728	0.059	780	0.067	829	0.075	875	0.082	919	0.090	961
399	0.058	763	0.067	813	0.075	861	0.083	906	0.091	948	0.099	989
418	0.065	799	0.074	847	0.083	893	0.092	937	0.100	978	0.108	1017
456	0.082	869	0.092	915	0.102	958	0.111	999	0.121	1037	0.130	1073
External Static Pressure												
	0.30		0.35		0.40		0.45		0.50		0.55	
CFM	kW	RPM	kW	RPM	kW	RPM	kW	RPM	kW	RPM	kW	RPM
255	0.049	843	0.054	889	0.059	932	0.064	974	0.068	1014	0.073	1052
266	0.053	855	0.057	900	0.062	943	0.067	984	0.072	1023	0.077	1061
285	0.058	876	0.064	920	0.069	962	0.074	1002	0.079	1040	0.084	1077
304	0.065	899	0.070	941	0.076	982	0.081	1021	0.087	1058	0.092	1094
323	0.072	923	0.078	964	0.084	1004	0.089	1041	0.095	1078	0.101	1112
342	0.079	948	0.086	988	0.092	1026	0.098	1063	0.104	1098	0.110	1132
361	0.088	974	0.094	1013	0.101	1050	0.107	1085	0.113	1119	0.120	1151
380	0.097	1000	0.104	1038	0.110	1074	0.117	1108	0.124	1140	0.130	1172
399	0.106	1027	0.114	1063	0.121	1098	0.128	1131	0.135	1162	0.141	1192

Table 163. Fan performance GEVG012 (continued)

External Static Pressure												
418	0.116	1054	0.124	1089	0.132	1122	0.139	1154	0.146	1184	0.153	1213
456	0.139	1108	0.147	1140	0.156	1170	0.164	1199	0.171	1227	0.179	1253

External Static Pressure												
	0.60		0.65		0.70		0.75		0.80		0.85	
CFM	**kW**	**RPM**	**kW**	**RPM**	**kW**	**RPM**	**kW**	**RPM**	**kW**	**RPM**	**kW**	**RPM**
255	0.078	1090	0.083	1126	0.088	1161	0.093	1195	0.098	1228	0.103	1260
266	0.082	1098	0.087	1133	0.092	1167	0.097	1201	0.102	1234	0.107	1266
285	0.089	1112	0.095	1147	0.100	1180	0.105	1213	0.110	1245	0.115	1276
304	0.097	1129	0.103	1162	0.108	1194	0.113	1226	0.118	1257	0.124	1287
323	0.106	1146	0.112	1178	0.117	1210	0.122	1240	0.128	1270	0.133	1299
342	0.116	1164	0.121	1195	0.127	1226	0.132	1255	0.138	1284	0.143	1312
361	0.126	1183	0.131	1213	0.137	1242	0.143	1270	0.148	1298	0.154	1325
380	0.136	1202	0.142	1231	0.148	1259	0.154	1286	0.160	1313	0.165	1339
399	0.148	1221	0.154	1249	0.160	1276	0.166	1302	0.172	1328	0.177	1353
418	0.160	1241	0.166	1267	0.173	1293	0.179	1318	0.185	1342	0.190	1366
456	0.186	1278	0.193	1303	0.200	1326	0.206	1348	0.213	1370	0.219	1392

External Static Pressure								
	0.90		0.95		1.00		1.05	
CFM	**kW**	**RPM**	**kW**	**RPM**	**kW**	**RPM**	**kW**	**RPM**
255	0.108	1293	0.113	1324	0.118	1356	0.123	1388
266	0.112	1297	0.117	1329	0.122	1360	0.128	1391
285	0.120	1307	0.125	1337	0.130	1367	0.135	1398
304	0.129	1317	0.134	1346	0.139	1376	-	-
323	0.138	1328	0.143	1357	0.148	1385	-	-
342	0.148	1340	0.153	1368	0.158	1395	-	-
361	0.159	1352	0.164	1379	-	-	-	-
380	0.170	1365	0.176	1391	-	-	-	-
399	0.183	1377	-	-	-	-	-	-
418	0.196	1390	-	-	-	-	-	-
456	-	-	-	-	-	-	-	-

Table 164. Fan performance GEVG015

External Static Pressure														
	0.00		0.05		0.10		0.15		0.20		0.25		0.30	
CFM	**kW**	**RPM**	**kW**	**RPM**	**kW**	**RPM**	**kW**	**RPM**	**kW**	**RPM**	**kW**	**RPM**	**kW**	**RPM**
318	0.016	421	0.020	478	0.023	533	0.027	586	0.032	636	0.036	685	0.041	732
333	0.018	429	0.021	486	0.025	540	0.029	592	0.033	643	0.038	691	0.043	737
356	0.020	443	0.023	498	0.027	552	0.031	603	0.036	653	0.041	700	0.046	746
380	0.022	457	0.026	512	0.030	564	0.034	615	0.039	664	0.044	710	0.049	755
404	0.025	472	0.029	526	0.033	577	0.037	627	0.042	675	0.048	721	0.053	765
428	0.028	487	0.032	540	0.036	591	0.041	640	0.046	687	0.051	732	0.057	775

Table 164. Fan performance GEVG015 (continued)

External Static Pressure														
451	0.032	502	0.036	554	0.040	604	0.045	652	0.050	698	0.055	743	0.061	786
475	0.036	518	0.040	569	0.044	618	0.049	665	0.054	711	0.060	754	0.066	797
499	0.040	535	0.044	585	0.049	633	0.054	679	0.059	723	0.065	766	0.071	808
523	0.045	551	0.049	600	0.054	647	0.059	693	0.064	737	0.070	779	0.077	819
570	0.056	585	0.060	632	0.065	677	0.070	721	0.076	763	0.082	804	0.089	843
External Static Pressure														
	0.35		0.40		0.45		0.50		0.55		0.60		0.65	
CFM	**kW**	**RPM**	**kW**	**RPM**	**kW**	**RPM**	**kW**	**RPM**	**kW**	**RPM**	**kW**	**RPM**	**kW**	**RPM**
318	0.046	777	0.052	820	0.057	861	0.063	901	0.069	939	0.075	975	0.081	1010
333	0.048	782	0.054	824	0.060	865	0.066	905	0.072	943	0.078	979	0.084	1014
356	0.052	790	0.057	832	0.063	872	0.069	911	0.076	949	0.082	984	0.089	1019
380	0.055	799	0.061	840	0.067	880	0.074	918	0.080	955	0.087	991	0.094	1025
404	0.059	808	0.065	849	0.072	888	0.078	926	0.085	962	0.092	997	0.099	1031
428	0.063	817	0.070	858	0.076	896	0.083	934	0.090	969	0.097	1004	0.105	1037
451	0.068	827	0.074	866	0.081	905	0.088	941	0.095	977	0.103	1011	0.110	1044
475	0.073	837	0.079	876	0.086	914	0.094	950	0.101	985	0.109	1019	0.116	1051
499	0.078	848	0.085	886	0.092	923	0.099	959	0.107	993	0.115	1026	0.123	1059
523	0.083	859	0.091	896	0.098	933	0.105	968	0.113	1002	0.121	1035	0.130	1066
570	0.096	881	0.103	917	0.111	953	0.119	987	0.127	1020	0.135	1052	0.144	1083
External Static Pressure														
	0.70		0.75		0.80		0.85		0.90		0.95		1.00	
CFM	**kW**	**RPM**	**kW**	**RPM**	**kW**	**RPM**	**kW**	**RPM**	**kW**	**RPM**	**kW**	**RPM**	**kW**	**RPM**
318	0.087	1044	0.093	1076	0.100	1107	0.106	1137	0.112	1165	0.118	1193	0.123	1219
333	0.090	1047	0.097	1079	0.103	1110	0.109	1139	0.116	1168	0.122	1195	0.128	1221
356	0.095	1052	0.102	1084	0.109	1114	0.115	1144	0.122	1172	0.128	1199	0.135	1225
380	0.101	1057	0.108	1089	0.114	1119	0.121	1148	0.128	1176	0.135	1203	0.142	1230
404	0.106	1063	0.113	1094	0.121	1124	0.128	1153	0.135	1181	0.142	1208	0.149	1234
428	0.112	1069	0.120	1100	0.127	1130	0.135	1159	0.142	1186	0.150	1213	0.157	1239
451	0.118	1076	0.126	1106	0.134	1136	0.141	1164	0.149	1192	0.157	1219	0.165	1245
475	0.124	1082	0.132	1113	0.141	1142	0.149	1170	0.157	1198	0.165	1224	0.173	1250
499	0.131	1090	0.139	1120	0.148	1149	0.156	1177	0.165	1204	0.173	1231	0.182	1256
523	0.138	1097	0.147	1127	0.155	1156	0.164	1183	0.173	1211	0.182	1237	0.190	1263
570	0.153	1113	0.162	1142	0.171	1170	0.180	1197	0.190	1224	0.199	1250	0.208	1276
External Static Pressure														
	1.05		1.10		1.15		1.20		1.25		1.30			
CFM	**kW**	**RPM**	**kW**	**RPM**	**kW**	**RPM**	**kW**	**RPM**	**kW**	**RPM**	**kW**	**RPM**		
318	0.129	1244	-	-	-	-	-	-	-	-	-	-		
333	0.134	1247	0.139	1271	0.145	1295	0.150	1317	0.155	1339	0.160	1361		
356	0.141	1250	0.147	1275	0.153	1298	0.158	1321	0.164	1344	-	-		
380	0.149	1255	0.155	1279	0.161	1303	0.167	1326	0.173	1348	-	-		
404	0.156	1260	0.163	1284	0.170	1308	0.176	1331	0.183	1353	-	-		

Table 164. Fan performance GEVG015 (continued)

External Static Pressure												
428	0.165	1265	0.172	1289	0.179	1313	0.186	1336	-	-	-	-
451	0.173	1270	0.180	1294	0.188	1318	0.195	1342	-	-	-	-
475	0.181	1276	0.189	1300	0.197	1324	-	-	-	-	-	-
499	0.190	1282	0.198	1306	0.206	1330	-	-	-	-	-	-
523	0.199	1288	0.208	1313	-	-	-	-	-	-	-	-
570	0.217	1301	-	-	-	-	-	-	-	-	-	-

Table 165. Fan performance GEVG018

External Static Pressure														
	0.00		0.05		0.10		0.15		0.20		0.25		0.30	
CFM	**kW**	**RPM**	**kW**	**RPM**	**kW**	**RPM**	**kW**	**RPM**	**kW**	**RPM**	**kW**	**RPM**	**kW**	**RPM**
382	0.022	459	0.026	513	0.030	566	0.034	616	0.039	665	0.044	711	0.050	756
399	0.024	469	0.028	523	0.032	575	0.037	625	0.042	673	0.047	719	0.052	763
428	0.028	487	0.032	540	0.036	591	0.041	640	0.046	687	0.051	732	0.057	775
456	0.033	506	0.036	557	0.041	607	0.046	655	0.051	701	0.056	745	0.062	788
485	0.038	525	0.042	576	0.046	624	0.051	671	0.056	716	0.062	759	0.068	801
513	0.043	544	0.047	594	0.052	641	0.057	687	0.062	731	0.068	774	0.074	815
542	0.049	565	0.053	613	0.058	659	0.063	704	0.069	747	0.075	789	0.081	829
570	0.056	585	0.060	632	0.065	677	0.070	721	0.076	763	0.082	804	0.089	843
599	0.063	606	0.068	652	0.072	696	0.078	739	0.084	780	0.090	820	0.097	858
627	0.071	627	0.076	672	0.080	715	0.086	757	0.092	797	0.098	836	0.105	873
684	0.089	671	0.094	713	0.099	754	0.104	793	0.110	832	0.117	869	0.124	904
External Static Pressure														
	0.35		0.40		0.45		0.50		0.55		0.60		0.65	
CFM	**kW**	**RPM**	**kW**	**RPM**	**kW**	**RPM**	**kW**	**RPM**	**kW**	**RPM**	**kW**	**RPM**	**kW**	**RPM**
382	0.055	799	0.061	841	0.068	881	0.074	919	0.081	956	0.087	991	0.094	1025
399	0.058	806	0.064	847	0.071	886	0.077	924	0.084	961	0.091	996	0.098	1029
428	0.063	817	0.070	858	0.076	896	0.083	934	0.090	969	0.097	1004	0.105	1037
456	0.069	829	0.075	868	0.082	907	0.089	943	0.096	978	0.104	1013	0.112	1045
485	0.075	841	0.081	880	0.089	918	0.096	954	0.103	988	0.111	1022	0.119	1054
513	0.081	854	0.088	892	0.095	929	0.103	964	0.111	998	0.119	1031	0.127	1063
542	0.088	867	0.095	905	0.103	941	0.111	975	0.119	1009	0.127	1041	0.135	1073
570	0.096	881	0.103	917	0.111	953	0.119	987	0.127	1020	0.135	1052	0.144	1083
599	0.104	895	0.111	931	0.119	965	0.127	999	0.136	1031	0.145	1063	0.154	1093
627	0.112	909	0.120	944	0.128	978	0.136	1011	0.145	1043	0.154	1074	0.163	1104
684	0.132	939	0.140	972	0.148	1005	0.157	1036	0.166	1067	0.175	1097	0.185	1126
External Static Pressure														
	0.70		0.75		0.80		0.85		0.90		0.95		1.00	
CFM	**kW**	**RPM**	**kW**	**RPM**	**kW**	**RPM**	**kW**	**RPM**	**kW**	**RPM**	**kW**	**RPM**	**kW**	**RPM**
382	0.101	1058	0.108	1089	0.115	1119	0.122	1149	0.129	1177	0.136	1204	0.143	1230
399	0.105	1062	0.112	1093	0.119	1123	0.127	1152	0.134	1180	0.141	1207	0.148	1233

Table 165. Fan performance GEVG018 (continued)

External Static Pressure														
428	0.112	1069	0.120	1100	0.127	1130	0.135	1159	0.142	1186	0.150	1213	0.157	1239
456	0.119	1077	0.127	1107	0.135	1137	0.143	1165	0.151	1193	0.159	1220	0.167	1246
485	0.127	1085	0.135	1116	0.143	1145	0.152	1173	0.160	1200	0.168	1227	0.177	1253
513	0.135	1094	0.144	1124	0.152	1153	0.161	1181	0.169	1208	0.178	1234	0.187	1260
542	0.144	1103	0.153	1133	0.162	1161	0.170	1189	0.179	1216	0.188	1242	0.197	1268
570	0.153	1113	0.162	1142	0.171	1170	0.180	1197	0.190	1224	0.199	1250	0.208	1276
599	0.163	1123	0.172	1151	0.181	1179	0.191	1207	0.200	1233	0.210	1259	0.220	1285
627	0.173	1133	0.182	1161	0.192	1189	0.202	1216	0.212	1242	0.221	1268	0.231	1293
684	0.194	1154	0.204	1182	0.215	1209	0.225	1235	0.235	1261	0.246	1287	0.257	1312
External Static Pressure														
	1.05		1.10		1.15		1.20		1.25		1.30		1.35	
CFM	**kW**	**RPM**	**kW**	**RPM**	**kW**	**RPM**	**kW**	**RPM**	**kW**	**RPM**	**kW**	**RPM**	**kW**	**RPM**
382	0.149	1255	0.156	1280	0.162	1303	0.168	1326	0.174	1349	0.180	1371	0.185	1392
399	0.155	1259	0.162	1283	0.168	1307	0.175	1330	0.181	1352	0.187	1374	-	-
428	0.165	1265	0.172	1289	0.179	1313	0.186	1336	0.192	1359	0.199	1381	-	-
456	0.174	1271	0.182	1296	0.189	1319	0.197	1343	0.204	1366	0.211	1388	-	-
485	0.185	1278	0.193	1303	0.201	1327	0.208	1350	0.216	1373	-	-	-	-
513	0.195	1285	0.204	1310	0.212	1334	0.220	1358	0.228	1381	-	-	-	-
542	0.206	1293	0.215	1318	0.224	1342	0.233	1366	-	-	-	-	-	-
570	0.217	1301	0.227	1326	0.236	1350	-	-	-	-	-	-	-	-
599	0.229	1310	0.239	1334	0.249	1359	-	-	-	-	-	-	-	-
627	0.241	1318	0.251	1343	-	-	-	-	-	-	-	-	-	-
684	-	-	-	-	-	-	-	-	-	-	-	-	-	-

Table 166. Fan performance GEVG024

External Static Pressure														
	0.00		0.05		0.10		0.15		0.20		0.25		0.30	
CFM	**kW**	**RPM**	**kW**	**RPM**	**kW**	**RPM**	**kW**	**RPM**	**kW**	**RPM**	**kW**	**RPM**	**kW**	**RPM**
509	0.048	460	0.051	499	0.054	537	0.058	574	0.061	610	0.066	646	0.070	681
532	0.048	468	0.051	506	0.055	544	0.059	581	0.063	617	0.067	652	0.073	687
570	0.049	482	0.053	520	0.057	556	0.061	593	0.066	628	0.071	663	0.077	698
608	0.051	496	0.055	533	0.060	570	0.064	606	0.070	641	0.075	675	0.082	709
646	0.054	512	0.059	548	0.063	584	0.069	619	0.075	654	0.081	688	0.087	721
684	0.058	528	0.063	563	0.068	599	0.074	633	0.081	667	0.087	701	0.094	734
722	0.063	544	0.069	579	0.075	614	0.081	648	0.088	682	0.095	714	0.102	747
760	0.070	562	0.076	596	0.082	630	0.089	664	0.096	697	0.103	729	0.111	761
798	0.077	580	0.084	614	0.090	647	0.097	680	0.105	712	0.113	744	0.121	775
836	0.086	598	0.093	632	0.100	664	0.107	697	0.115	728	0.124	759	0.132	790
912	0.108	638	0.115	670	0.123	701	0.131	732	0.140	762	0.149	792	0.158	821

Table 166. Fan performance GEVG024 (continued)

External Static Pressure														
	0.35		0.40		0.45		0.50		0.55		0.60		0.65	
CFM	**kW**	**RPM**	**kW**	**RPM**	**kW**	**RPM**	**kW**	**RPM**	**kW**	**RPM**	**kW**	**RPM**	**kW**	**RPM**
509	0.076	715	0.081	749	0.087	782	0.093	814	0.099	845	0.106	876	0.113	907
532	0.078	721	0.084	754	0.090	787	0.096	819	0.103	850	0.110	881	0.118	911
570	0.083	731	0.089	764	0.095	797	0.102	828	0.110	859	0.117	890	0.125	919
608	0.088	742	0.095	775	0.102	807	0.109	838	0.117	869	0.125	899	0.134	928
646	0.094	754	0.102	786	0.109	817	0.117	848	0.125	878	0.134	908	0.143	937
684	0.102	766	0.109	797	0.117	828	0.126	859	0.134	889	0.143	918	0.153	947
722	0.110	778	0.118	810	0.127	840	0.135	870	0.144	900	0.154	928	0.163	957
760	0.119	792	0.128	822	0.137	852	0.146	882	0.155	911	0.165	939	0.175	967
798	0.130	805	0.139	836	0.148	865	0.157	894	0.167	923	0.177	951	0.188	978
836	0.141	820	0.150	849	0.160	878	0.170	907	0.180	935	0.190	962	0.201	989
912	0.167	850	0.177	878	0.188	906	0.198	934	0.209	961	0.220	987	0.231	1013
External Static Pressure														
	0.70		0.75		0.80		0.85		0.90		0.95		1.00	
CFM	**kW**	**RPM**	**kW**	**RPM**	**kW**	**RPM**	**kW**	**RPM**	**kW**	**RPM**	**kW**	**RPM**	**kW**	**RPM**
509	0.121	936	0.128	965	0.136	993	0.144	1021	0.152	1048	0.161	1074	0.169	1100
532	0.125	941	0.133	969	0.141	998	0.149	1025	0.158	1052	0.167	1078	0.175	1104
570	0.133	948	0.142	977	0.150	1005	0.159	1032	0.168	1059	0.177	1085	0.186	1110
608	0.142	957	0.151	985	0.160	1013	0.169	1040	0.179	1066	0.188	1092	0.198	1117
646	0.152	966	0.161	993	0.170	1021	0.180	1048	0.190	1074	0.200	1099	0.210	1124
684	0.162	975	0.172	1002	0.182	1029	0.192	1056	0.202	1082	0.212	1107	0.223	1132
722	0.173	984	0.183	1012	0.193	1038	0.204	1065	0.215	1090	0.225	1115	0.236	1140
760	0.185	995	0.196	1021	0.206	1048	0.217	1074	0.228	1099	0.239	1124	0.250	1148
798	0.198	1005	0.209	1032	0.220	1058	0.231	1083	0.242	1108	0.254	1132	0.265	1157
836	0.212	1016	0.223	1042	0.234	1068	0.246	1093	0.257	1117	0.269	1142	0.281	1165
912	0.242	1039	0.254	1064	0.266	1089	0.278	1113	0.290	1137	0.302	1161	0.315	1184
External Static Pressure														
	1.05		1.10		1.15		1.20							
CFM	**kW**	**RPM**	**kW**	**RPM**	**kW**	**RPM**	**kW**	**RPM**						
509	0.178	1125	0.187	1150	0.195	1174	0.205	1197						
532	0.184	1129	0.194	1153	0.203	1177	0.212	1200						
570	0.196	1135	0.205	1160	0.215	1183	-	-						
608	0.208	1142	0.218	1166	0.228	1190	-	-						
646	0.220	1149	0.231	1173	0.241	1196	-	-						
684	0.233	1156	0.244	1180	-	-	-	-						
722	0.247	1164	0.258	1188	-	-	-	-						
760	0.262	1172	0.273	1195	-	-	-	-						
798	0.277	1180	-	-	-	-	-	-						
836	0.293	1189	-	-	-	-	-	-						
912	-	-	-	-	-	-	-	-						

Table 167. Fan performance GEVG030

External Static Pressure														
	0.00		0.05		0.10		0.15		0.20		0.25		0.30	
CFM	**kW**	**RPM**	**kW**	**RPM**	**kW**	**RPM**	**kW**	**RPM**	**kW**	**RPM**	**kW**	**RPM**	**kW**	**RPM**
637	0.053	508	0.058	545	0.062	581	0.068	616	0.073	651	0.079	685	0.086	718
665	0.056	519	0.061	556	0.066	591	0.071	626	0.077	660	0.084	694	0.091	727
713	0.062	540	0.067	576	0.073	610	0.079	645	0.086	678	0.093	711	0.100	744
760	0.070	562	0.076	596	0.082	630	0.089	664	0.096	697	0.103	729	0.111	761
808	0.080	585	0.086	618	0.093	651	0.100	684	0.108	716	0.116	748	0.124	779
855	0.091	608	0.098	641	0.105	673	0.113	705	0.121	736	0.129	767	0.138	797
903	0.105	633	0.112	665	0.120	697	0.128	728	0.137	758	0.145	788	0.155	817
950	0.121	659	0.128	690	0.136	720	0.145	750	0.154	780	0.163	809	0.173	838
998	0.139	686	0.147	716	0.156	745	0.164	775	0.173	803	0.183	832	0.193	859
1045	0.159	713	0.168	742	0.176	771	0.185	799	0.195	827	0.205	854	0.215	881
1140	0.207	771	0.216	798	0.225	825	0.235	851	0.245	877	0.255	903	0.266	928
External Static Pressure														
	0.35		0.40		0.45		0.50		0.55		0.60		0.65	
CFM	**kW**	**RPM**	**kW**	**RPM**	**kW**	**RPM**	**kW**	**RPM**	**kW**	**RPM**	**kW**	**RPM**	**kW**	**RPM**
637	0.093	751	0.100	783	0.107	815	0.115	846	0.123	876	0.132	906	0.140	935
665	0.098	760	0.105	791	0.113	823	0.121	853	0.130	883	0.139	913	0.148	942
713	0.108	775	0.116	807	0.124	837	0.133	867	0.142	897	0.151	926	0.161	954
760	0.119	792	0.128	822	0.137	852	0.146	882	0.155	911	0.165	939	0.175	967
808	0.133	809	0.142	839	0.151	869	0.161	897	0.170	926	0.181	954	0.191	981
855	0.147	827	0.157	856	0.166	885	0.176	913	0.187	941	0.197	968	0.208	995
903	0.164	846	0.174	875	0.184	903	0.194	931	0.205	958	0.216	984	0.227	1010
950	0.182	866	0.193	894	0.203	921	0.214	948	0.225	974	0.236	1000	0.248	1026
998	0.203	887	0.214	914	0.224	940	0.235	966	0.247	992	0.258	1017	0.270	1042
1045	0.225	908	0.236	934	0.247	960	0.258	985	0.270	1010	0.282	1035	0.294	1059
1140	0.276	953	0.288	977	0.299	1001	0.311	1025	0.323	1048	0.335	1071	0.347	1094
External Static Pressure														
	0.70		0.75		0.80		0.85		0.90		0.95		1.00	
CFM	**kW**	**RPM**	**kW**	**RPM**	**kW**	**RPM**	**kW**	**RPM**	**kW**	**RPM**	**kW**	**RPM**	**kW**	**RPM**
637	0.149	963	0.158	991	0.168	1019	0.177	1046	0.187	1072	0.197	1098	0.207	1123
665	0.157	970	0.166	998	0.176	1025	0.186	1052	0.196	1078	0.206	1103	0.216	1128
713	0.170	982	0.180	1009	0.191	1036	0.201	1062	0.211	1088	0.222	1113	0.233	1138
760	0.185	995	0.196	1021	0.206	1048	0.217	1074	0.228	1099	0.239	1124	0.250	1148
808	0.202	1008	0.212	1034	0.224	1060	0.235	1086	0.246	1110	0.258	1135	0.269	1159
855	0.219	1022	0.230	1047	0.242	1073	0.253	1098	0.265	1122	0.277	1146	0.289	1170
903	0.239	1036	0.250	1061	0.262	1086	0.274	1111	0.286	1135	0.298	1158	0.310	1181
950	0.259	1051	0.271	1076	0.283	1100	0.295	1124	0.308	1147	0.320	1170	0.333	1193
998	0.282	1067	0.294	1091	0.306	1115	0.319	1138	0.332	1161	0.344	1183	-	-
1045	0.306	1083	0.318	1106	0.331	1129	0.344	1152	0.356	1174	0.369	1196	-	-
1140	0.360	1116	0.373	1138	0.386	1160	0.399	1182	-	-	-	-	-	-

Table 167. Fan performance GEVG030 (continued)

External Static Pressure						
	1.05		1.10		1.15	
CFM	**kW**	**RPM**	**kW**	**RPM**	**kW**	**RPM**
637	0.217	1147	0.228	1171	0.238	1195
665	0.227	1153	0.237	1177	0.248	1200
713	0.244	1162	0.255	1186	-	-
760	0.262	1172	0.273	1195	-	-
808	0.281	1182	-	-	-	-
855	0.301	1193	-	-	-	-
903	-	-	-	-	-	-
950	-	-	-	-	-	-
998	-	-	-	-	-	-
1045	-	-	-	-	-	-
1140	-	-	-	-	-	-

Table 168. Fan performance GEVG036

External Static Pressure														
	0.00		0.05		0.10		0.15		0.20		0.25		0.30	
CFM	**kW**	**RPM**	**kW**	**RPM**	**kW**	**RPM**	**kW**	**RPM**	**kW**	**RPM**	**kW**	**RPM**	**kW**	**RPM**
764	0.063	526	0.069	567	0.075	607	0.081	645	0.088	682	0.096	717	0.104	751
798	0.066	543	0.072	583	0.079	622	0.086	660	0.094	696	0.102	731	0.111	765
855	0.073	570	0.080	610	0.088	648	0.096	685	0.105	721	0.115	756	0.124	789
912	0.082	598	0.091	637	0.100	675	0.109	711	0.119	746	0.130	780	0.140	813
969	0.094	625	0.104	663	0.114	700	0.125	736	0.136	771	0.147	804	0.159	837
1026	0.109	651	0.120	689	0.131	725	0.143	761	0.155	795	0.167	828	0.180	860
1083	0.127	676	0.139	714	0.151	750	0.163	785	0.176	818	0.190	851	0.203	882
1140	0.147	700	0.160	737	0.173	773	0.186	808	0.200	841	0.214	873	0.229	904
1197	0.170	724	0.183	760	0.198	796	0.212	830	0.227	863	0.241	894	0.256	925
1254	0.195	746	0.210	782	0.224	817	0.240	851	0.255	884	0.271	915	0.286	945
1368	0.253	788	0.269	823	0.285	858	0.302	891	0.319	923	0.336	953	0.353	983
External Static Pressure														
	0.35		0.40		0.45		0.50		0.55		0.60		0.65	
CFM	**kW**	**RPM**	**kW**	**RPM**	**kW**	**RPM**	**kW**	**RPM**	**kW**	**RPM**	**kW**	**RPM**	**kW**	**RPM**
764	0.112	785	0.121	817	0.130	848	0.139	878	0.149	907	0.159	935	0.169	962
798	0.120	798	0.129	830	0.139	861	0.149	890	0.159	919	0.169	947	0.180	974
855	0.134	821	0.145	853	0.155	883	0.166	912	0.177	940	0.189	967	0.200	994
912	0.151	845	0.163	875	0.174	905	0.186	934	0.198	961	0.210	988	0.223	1014
969	0.171	868	0.183	898	0.196	927	0.208	955	0.221	983	0.234	1009	0.247	1034
1026	0.193	891	0.206	920	0.219	949	0.233	977	0.246	1004	0.260	1029	0.274	1055
1083	0.217	913	0.231	942	0.245	970	0.259	998	0.273	1024	0.288	1050	0.302	1074
1140	0.243	934	0.258	963	0.272	991	0.287	1018	0.302	1044	0.317	1069	0.333	1093
1197	0.272	955	0.287	983	0.302	1011	0.318	1037	0.334	1063	0.349	1088	0.365	1112

Table 168. Fan performance GEVG036 (continued)

External Static Pressure														
1254	0.302	974	0.318	1003	0.334	1030	0.350	1056	0.367	1082	0.383	1106	0.399	1130
1368	0.370	1012	0.387	1039	0.404	1066	0.421	1092	0.438	1117	0.455	1141	0.472	1164

External Static Pressure														
	0.70		0.75		0.80		0.85		0.90		0.95		1.00	
CFM	**kW**	**RPM**	**kW**	**RPM**	**kW**	**RPM**	**kW**	**RPM**	**kW**	**RPM**	**kW**	**RPM**	**kW**	**RPM**
764	0.179	989	0.190	1014	0.201	1039	0.212	1063	0.223	1086	0.234	1109	0.245	1131
798	0.191	1000	0.202	1025	0.213	1050	0.225	1073	0.236	1096	0.248	1119	0.260	1141
855	0.212	1019	0.224	1044	0.236	1068	0.248	1091	0.261	1114	0.273	1136	0.285	1158
912	0.235	1039	0.248	1063	0.261	1087	0.274	1110	0.287	1132	0.299	1154	0.312	1175
969	0.261	1059	0.274	1083	0.287	1106	0.301	1129	0.314	1151	0.328	1172	0.341	1193
1026	0.288	1079	0.302	1102	0.316	1125	0.330	1147	0.344	1169	0.358	1190	-	-
1083	0.317	1098	0.331	1121	0.346	1144	0.361	1166	0.375	1187	-	-	-	-
1140	0.348	1117	0.363	1140	0.378	1162	0.393	1184	-	-	-	-	-	-
1197	0.381	1135	0.396	1158	0.412	1180	-	-	-	-	-	-	-	-
1254	0.415	1153	0.431	1175	0.447	1197	-	-	-	-	-	-	-	-
1368	0.489	1186	-	-	-	-	-	-	-	-	-	-	-	-

External Static Pressure						
	1.05		1.10		1.15	
CFM	**kW**	**RPM**	**kW**	**RPM**	**kW**	**RPM**
764	0.256	1153	0.268	1174	0.279	1195
798	0.271	1162	0.283	1183	-	-
855	0.297	1179	0.310	1199	-	-
912	0.325	1196	-	-	-	-
969	-	-	-	-	-	-
1026	-	-	-	-	-	-
1083	-	-	-	-	-	-
1140	-	-	-	-	-	-
1197	-	-	-	-	-	-
1254	-	-	-	-	-	-
1368	-	-	-	-	-	-

Table 169. Fan performance GEVG042

External Static Pressure														
	0.00		0.05		0.10		0.15		0.20		0.25		0.30	
CFM	**kW**	**RPM**	**kW**	**RPM**	**kW**	**RPM**	**kW**	**RPM**	**kW**	**RPM**	**kW**	**RPM**	**kW**	**RPM**
891	0.078	588	0.086	627	0.095	665	0.104	702	0.114	737	0.124	771	0.134	804
931	0.086	607	0.095	646	0.104	683	0.114	719	0.125	755	0.135	788	0.146	821
998	0.101	638	0.112	676	0.123	713	0.134	749	0.145	783	0.157	816	0.169	849
1064	0.121	668	0.132	705	0.144	742	0.156	777	0.169	811	0.182	843	0.195	875
1131	0.143	697	0.156	734	0.169	770	0.183	804	0.196	837	0.210	870	0.224	901
1197	0.170	724	0.183	760	0.198	796	0.212	830	0.227	863	0.241	894	0.256	925

Table 169. Fan performance GEVG042 (continued)

External Static Pressure														
1264	0.200	750	0.214	786	0.229	821	0.245	855	0.260	887	0.276	918	0.292	949
1330	0.232	774	0.248	810	0.264	845	0.280	878	0.297	910	0.313	941	0.330	971
1397	0.269	798	0.286	833	0.302	867	0.319	900	0.337	932	0.354	963	0.371	992
1463	0.308	820	0.326	855	0.343	889	0.361	921	0.379	953	0.397	983	0.414	1012
1596	0.397	861	0.416	895	0.435	928	0.453	960	0.472	991	0.491	1021	0.510	1050

External Static Pressure														
	0.35		0.40		0.45		0.50		0.55		0.60		0.65	
CFM	**kW**	**RPM**	**kW**	**RPM**	**kW**	**RPM**	**kW**	**RPM**	**kW**	**RPM**	**kW**	**RPM**	**kW**	**RPM**
891	0.145	836	0.156	867	0.167	897	0.179	926	0.190	953	0.202	980	0.214	1007
931	0.158	853	0.169	883	0.181	912	0.193	941	0.206	968	0.218	995	0.231	1021
998	0.182	880	0.194	909	0.207	938	0.220	966	0.234	993	0.247	1019	0.261	1045
1064	0.208	905	0.222	935	0.236	963	0.250	991	0.264	1017	0.278	1043	0.293	1068
1131	0.239	931	0.253	960	0.268	988	0.283	1015	0.298	1041	0.313	1066	0.328	1090
1197	0.272	955	0.287	983	0.302	1011	0.318	1037	0.334	1063	0.349	1088	0.365	1112
1264	0.308	978	0.324	1006	0.340	1033	0.356	1059	0.373	1085	0.389	1109	0.405	1133
1330	0.346	1000	0.363	1027	0.380	1054	0.397	1080	0.414	1105	0.430	1129	0.447	1153
1397	0.388	1021	0.406	1048	0.423	1075	0.440	1100	0.458	1125	0.475	1149	0.492	1172
1463	0.432	1040	0.450	1068	0.468	1094	0.486	1119	0.504	1144	0.521	1167	0.539	1190
1596	0.529	1077	0.548	1104	0.566	1130	0.585	1154	0.603	1178	-	-	-	-

External Static Pressure																
	0.70		0.75		0.80		0.85		0.90		0.95		1.00		1.05	
CFM	**kW**	**RPM**	**kW**	**RPM**	**kW**	**RPM**	**kW**	**RPM**	**kW**	**RPM**	**kW**	**RPM**	**kW**	**RPM**	**kW**	**RPM**
891	0.227	1032	0.239	1056	0.252	1080	0.264	1103	0.277	1126	0.289	1147	0.302	1169	0.315	1189
931	0.244	1046	0.256	1070	0.269	1093	0.283	1116	0.296	1138	0.309	1160	0.322	1181	-	-
998	0.274	1069	0.288	1093	0.302	1116	0.315	1138	0.329	1160	0.343	1181	-	-	-	-
1064	0.307	1092	0.321	1115	0.336	1138	0.350	1160	0.365	1181	-	-	-	-	-	-
1131	0.343	1114	0.358	1137	0.373	1159	0.388	1181	-	-	-	-	-	-	-	-
1197	0.381	1135	0.396	1158	0.412	1180	-	-	-	-	-	-	-	-	-	-
1264	0.421	1156	0.437	1178	0.453	1200	-	-	-	-	-	-	-	-	-	-
1330	0.464	1175	0.480	1197	-	-	-	-	-	-	-	-	-	-	-	-
1397	0.509	1194	-	-	-	-	-	-	-	-	-	-	-	-	-	-
1463	-	-	-	-	-	-	-	-	-	-	-	-	-	-	-	-
1596	-	-	-	-	-	-	-	-	-	-	-	-	-	-	-	-

Table 170. Fan performance GEVG048

External Static Pressure														
	0.00		0.05		0.10		0.15		0.20		0.25		0.30	
CFM	**kW**	**RPM**	**kW**	**RPM**	**kW**	**RPM**	**kW**	**RPM**	**kW**	**RPM**	**kW**	**RPM**	**kW**	**RPM**
1018	0.040	378	0.056	418	0.073	457	0.089	494	0.106	530	0.122	564	0.138	598
1064	0.044	387	0.061	426	0.078	464	0.095	501	0.112	537	0.129	571	0.146	604
1140	0.053	401	0.071	440	0.089	478	0.107	514	0.124	549	0.142	583	0.160	616

Table 170. Fan performance GEVG048 (continued)

External Static Pressure														
1216	0.065	417	0.084	455	0.102	492	0.121	527	0.139	562	0.158	595	0.177	628
1292	0.080	433	0.099	471	0.118	507	0.138	542	0.157	576	0.176	608	0.196	640
1368	0.097	450	0.117	487	0.137	523	0.157	557	0.178	590	0.198	622	0.218	653
1444	0.119	469	0.139	505	0.160	539	0.181	573	0.201	605	0.222	637	0.243	667
1520	0.143	488	0.165	523	0.186	557	0.207	590	0.229	622	0.250	653	0.272	682
1596	0.172	508	0.194	542	0.216	576	0.238	608	0.260	639	0.282	669	0.305	698
1672	0.205	530	0.227	563	0.250	595	0.272	627	0.295	657	0.318	686	0.341	715
1824	0.284	576	0.307	607	0.331	638	0.355	668	0.379	696	0.403	724	0.427	751
External Static Pressure														
	0.35		0.40		0.45		0.50		0.55		0.60		0.65	
CFM	**kW**	**RPM**	**kW**	**RPM**	**kW**	**RPM**	**kW**	**RPM**	**kW**	**RPM**	**kW**	**RPM**	**kW**	**RPM**
1018	0.155	630	0.171	662	0.187	692	0.204	721	0.220	750	0.237	777	0.253	803
1064	0.163	637	0.180	668	0.197	698	0.214	727	0.231	755	0.248	782	0.265	808
1140	0.178	647	0.196	678	0.214	708	0.232	736	0.250	764	0.268	791	0.286	817
1216	0.195	659	0.214	689	0.233	718	0.252	746	0.271	774	0.290	800	0.309	826
1292	0.215	671	0.235	700	0.255	729	0.275	757	0.294	784	0.314	810	0.334	835
1368	0.238	684	0.259	713	0.279	741	0.300	768	0.321	795	0.342	820	0.363	845
1444	0.265	697	0.286	726	0.307	753	0.328	780	0.350	806	0.372	831	0.394	855
1520	0.294	711	0.316	739	0.338	766	0.360	792	0.383	818	0.405	843	0.428	866
1596	0.327	726	0.350	754	0.373	780	0.396	806	0.419	831	0.442	855	0.465	878
1672	0.364	742	0.388	769	0.411	795	0.435	820	0.459	844	0.483	868	0.507	891
1824	0.451	777	0.476	802	0.501	827	0.525	851	0.551	874	0.576	896	0.601	918
External Static Pressure														
	0.70		0.75		0.80		0.85		0.90		0.95		1.00	
CFM	**kW**	**RPM**	**kW**	**RPM**	**kW**	**RPM**	**kW**	**RPM**	**kW**	**RPM**	**kW**	**RPM**	**kW**	**RPM**
1018	0.270	829	0.287	854	0.303	877	0.320	901	0.337	923	0.354	945	0.371	966
1064	0.282	834	0.300	858	0.317	882	0.334	905	0.352	927	0.370	949	0.387	970
1140	0.304	842	0.323	866	0.341	890	0.360	913	0.378	935	0.397	956	0.416	977
1216	0.328	851	0.348	875	0.367	898	0.387	920	0.406	942	0.426	964	0.446	984
1292	0.355	860	0.375	883	0.395	906	0.416	929	0.437	950	0.457	971	0.478	992
1368	0.384	869	0.405	892	0.426	915	0.448	937	0.469	959	0.491	979	0.513	1000
1444	0.416	879	0.438	902	0.460	924	0.482	946	0.505	967	0.528	988	0.551	1008
1520	0.451	890	0.473	912	0.497	934	0.520	956	0.543	976	0.567	997	0.591	1016
1596	0.489	901	0.513	923	0.537	945	0.561	966	0.585	986	0.610	1006	0.634	1025
1672	0.531	913	0.556	935	0.580	956	0.605	976	0.630	996	0.656	1016	0.681	1035
1824	0.627	939	0.653	960	0.680	980	0.706	999	0.733	1018	0.760	1037	0.787	1055
External Static Pressure														
	1.05		1.10		1.15		1.20		1.25		1.30		1.35	
CFM	**kW**	**RPM**	**kW**	**RPM**	**kW**	**RPM**	**kW**	**RPM**	**kW**	**RPM**	**kW**	**RPM**	**kW**	**RPM**
1018	0.388	986	0.405	1006	0.423	1025	0.440	1044	0.458	1062	0.475	1080	0.493	1098
1064	0.405	990	0.423	1010	0.441	1030	0.459	1048	0.478	1067	0.496	1085	0.515	1102

Table 170. Fan performance GEVG048 (continued)

External Static Pressure														
1140	0.435	997	0.454	1017	0.473	1036	0.492	1055	0.512	1073	0.531	1091	0.551	1109
1216	0.466	1005	0.486	1024	0.506	1043	0.527	1062	0.548	1080	0.568	1098	0.589	1116
1292	0.499	1012	0.521	1031	0.542	1050	0.564	1069	0.585	1087	0.607	1105	0.629	1123
1368	0.535	1020	0.557	1039	0.580	1058	0.603	1076	0.625	1095	0.648	1112	0.672	1130
1444	0.574	1027	0.597	1047	0.620	1065	0.644	1084	0.668	1102	0.692	1120	0.716	1137
1520	0.615	1036	0.639	1055	0.664	1073	0.688	1091	0.713	1109	0.738	1127	0.764	1144
1596	0.659	1044	0.685	1063	0.710	1081	0.736	1099	0.761	1117	0.788	1135	0.814	1152
1672	0.707	1054	0.733	1072	0.760	1090	0.786	1108	0.813	1125	0.840	1143	0.867	1160
1824	0.814	1073	0.842	1091	0.870	1109	0.898	1126	0.927	1143	0.956	1160	0.985	1177

External Static Pressure												
	1.40		1.45		1.50		1.55		1.60		1.65	
CFM	**kW**	**RPM**	**kW**	**RPM**	**kW**	**RPM**	**kW**	**RPM**	**kW**	**RPM**	**kW**	**RPM**
1018	0.511	1115	0.529	1132	0.547	1148	0.566	1164	0.584	1180	0.603	1196
1064	0.533	1119	0.552	1136	0.571	1153	0.590	1169	0.610	1185	-	-
1140	0.571	1126	0.591	1143	0.611	1160	0.632	1176	0.653	1193	-	-
1216	0.611	1133	0.632	1150	0.653	1167	0.675	1184	0.697	1200	-	-
1292	0.652	1140	0.674	1157	0.697	1174	0.720	1191	-	-	-	-
1368	0.695	1147	0.719	1164	0.743	1181	0.767	1198	-	-	-	-
1444	0.741	1154	0.766	1172	0.791	1189	-	-	-	-	-	-
1520	0.789	1162	0.815	1179	0.841	1196	-	-	-	-	-	-
1596	0.841	1169	0.867	1186	-	-	-	-	-	-	-	-
1672	0.895	1177	0.923	1194	-	-	-	-	-	-	-	-
1824	1.014	1193	-	-	-	-	-	-	-	-	-	-

Table 171. Fan performance GEVG060

External Static Pressure														
	0.00		0.05		0.10		0.15		0.20		0.25		0.30	
CFM	**kW**	**RPM**	**kW**	**RPM**	**kW**	**RPM**	**kW**	**RPM**	**kW**	**RPM**	**kW**	**RPM**	**kW**	**RPM**
1273	0.076	429	0.095	467	0.114	503	0.133	538	0.152	572	0.172	605	0.191	637
1330	0.088	442	0.108	479	0.127	515	0.147	549	0.167	583	0.187	615	0.207	647
1425	0.113	464	0.133	500	0.154	535	0.175	569	0.195	602	0.216	633	0.237	664
1520	0.143	488	0.165	523	0.186	557	0.207	590	0.229	622	0.250	653	0.272	682
1615	0.180	513	0.202	547	0.224	580	0.246	612	0.268	643	0.291	673	0.313	702
1710	0.223	541	0.246	574	0.268	606	0.291	637	0.314	666	0.337	695	0.361	723
1805	0.273	570	0.296	602	0.320	633	0.343	662	0.367	691	0.391	719	0.415	746
1900	0.331	601	0.355	632	0.379	661	0.403	690	0.427	718	0.452	745	0.477	771
1995	0.397	634	0.421	663	0.446	692	0.471	720	0.496	746	0.521	772	0.546	797
2090	0.472	669	0.497	697	0.522	725	0.547	751	0.572	777	0.598	801	0.624	825
2280	0.649	747	0.675	772	0.701	797	0.727	821	0.753	844	0.780	866	0.806	887

Table 171. Fan performance GEVG060 (continued)

External Static Pressure														
	0.35		0.40		0.45		0.50		0.55		0.60		0.65	
CFM	**kW**	**RPM**	**kW**	**RPM**	**kW**	**RPM**	**kW**	**RPM**	**kW**	**RPM**	**kW**	**RPM**	**kW**	**RPM**
1273	0.210	668	0.230	698	0.249	726	0.269	754	0.288	781	0.308	807	0.328	833
1330	0.227	677	0.247	706	0.267	735	0.287	762	0.307	789	0.328	815	0.348	840
1425	0.258	694	0.279	722	0.300	750	0.321	777	0.342	803	0.364	828	0.386	853
1520	0.294	711	0.316	739	0.338	766	0.360	792	0.383	818	0.405	843	0.428	866
1615	0.336	730	0.359	757	0.382	784	0.405	809	0.428	834	0.452	858	0.475	881
1710	0.384	751	0.408	777	0.432	802	0.456	827	0.480	851	0.504	874	0.529	897
1805	0.439	773	0.464	798	0.488	823	0.513	847	0.538	870	0.563	892	0.589	914
1900	0.502	796	0.527	821	0.552	844	0.578	867	0.603	890	0.629	911	0.656	933
1995	0.572	821	0.597	845	0.623	868	0.650	890	0.676	911	0.703	932	0.730	952
2090	0.650	848	0.676	871	0.703	893	0.730	914	0.757	934	0.784	954	0.812	974
2280	0.834	908	0.861	929	0.889	948	0.917	967	-	-	-	-	-	-
External Static Pressure														
	0.70		0.75		0.80		0.85		0.90		0.95		1.00	
CFM	**kW**	**RPM**	**kW**	**RPM**	**kW**	**RPM**	**kW**	**RPM**	**kW**	**RPM**	**kW**	**RPM**	**kW**	**RPM**
1273	0.348	857	0.368	881	0.388	904	0.408	927	0.429	948	0.449	969	0.470	990
1330	0.369	864	0.390	888	0.410	911	0.431	933	0.453	954	0.474	975	0.495	996
1425	0.407	877	0.429	900	0.451	922	0.473	944	0.496	965	0.518	986	0.541	1006
1520	0.451	890	0.473	912	0.497	934	0.520	956	0.543	976	0.567	997	0.591	1016
1615	0.499	904	0.523	926	0.547	947	0.572	968	0.596	988	0.621	1008	0.646	1028
1710	0.554	919	0.578	940	0.604	961	0.629	982	0.655	1001	0.680	1021	0.706	1040
1805	0.614	935	0.640	956	0.666	976	0.692	996	0.719	1015	0.746	1034	0.773	1053
1900	0.682	953	0.709	973	0.736	993	0.763	1012	0.790	1030	0.818	1049	0.846	1067
1995	0.757	972	0.784	991	0.812	1010	0.840	1029	0.868	1047	0.897	1064	0.926	1082
2090	0.840	993	0.868	1011	0.897	1029	0.925	1047	0.954	1064	0.984	1081	1.013	1098
2280	-	-	-	-	-	-	-	-	-	-	-	-	-	-
External Static Pressure														
	1.05		1.10		1.15		1.20		1.25		1.30		1.35	
CFM	**kW**	**RPM**	**kW**	**RPM**	**kW**	**RPM**	**kW**	**RPM**	**kW**	**RPM**	**kW**	**RPM**	**kW**	**RPM**
1273	0.491	1010	0.512	1030	0.533	1049	0.554	1067	0.576	1086	0.597	1104	0.619	1121
1330	0.517	1016	0.539	1035	0.561	1054	0.583	1073	0.605	1091	0.628	1109	0.650	1126
1425	0.564	1025	0.587	1045	0.610	1063	0.633	1082	0.657	1100	0.681	1118	0.705	1135
1520	0.615	1036	0.639	1055	0.664	1073	0.688	1091	0.713	1109	0.738	1127	0.764	1144
1615	0.671	1047	0.696	1065	0.722	1084	0.748	1102	0.774	1119	0.800	1137	0.827	1154
1710	0.733	1058	0.759	1077	0.786	1095	0.813	1112	0.840	1130	0.868	1147	0.895	1164
1805	0.800	1071	0.828	1089	0.855	1106	0.883	1124	0.912	1141	0.940	1158	0.969	1174
1900	0.874	1084	0.903	1102	0.931	1119	0.960	1136	0.990	1152	1.020	1169	1.050	1185
1995	0.955	1099	0.984	1116	1.014	1132	1.044	1149	1.075	1165	-	-	-	-
2090	-	-	-	-	-	-	-	-	-	-	-	-	-	-
2280	-	-	-	-	-	-	-	-	-	-	-	-	-	-

Table 171. Fan performance GEVG060 (continued)

External Static Pressure								
	1.40		1.45		1.50		1.55	
CFM	**kW**	**RPM**	**kW**	**RPM**	**kW**	**RPM**	**kW**	**RPM**
1273	0.641	1139	0.663	1156	0.686	1172	0.709	1189
1330	0.673	1144	0.696	1161	0.720	1178	0.743	1195
1425	0.729	1153	0.754	1170	0.778	1187	-	-
1520	0.789	1162	0.815	1179	0.841	1196	-	-
1615	0.854	1171	0.881	1188	-	-	-	-
1710	0.923	1181	0.952	1198	-	-	-	-
1805	0.999	1191	-	-	-	-	-	-
1900	-	-	-	-	-	-	-	-
1995	-	-	-	-	-	-	-	-
2090	-	-	-	-	-	-	-	-
2280	-	-	-	-	-	-	-	-

Figure 14. Fan performance curve 6 tons GEHE072[4]

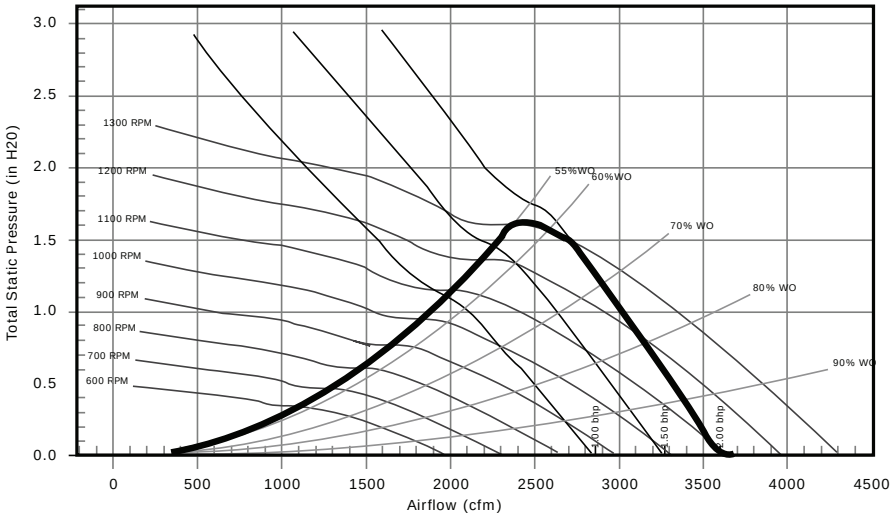

Table 172. Fan performance 6 tons GEHE072 (includes wet coil, no filter)

Std Airflow CFM	Unit External Static Pressure inches W.G. (Wet Coil, No Drive Loss Included & No Return Air Filter)													
	0.1		0.2		0.3		0.4		0.5		0.6		0.7	
	RPM	BHP	RPM	BHP	RPM	BHP	RPM	BHP	RPM	BHP	RPM	BHP	RPM	BHP
1920	632(a)	0.35(a)	682(a)	0.40(a)	729(a)	0.46(a)	774(a)	0.51(a)	818(a)	0.57(a)	860(a)	0.62(a)	901(a)	0.68(a)
2160	699(a)	0.49(a)	745(a)	0.55(a)	787(a)	0.60(a)	829(a)	0.66(a)	869(a)	0.72(a)	907(a)	0.79(a)	945(b)	0.85(b)
2400	767(a)	0.66(a)	808(a)	0.72(a)	848(a)	0.78(a)	886(a)	0.85(a)	923(a)	0.91(a)	959(b)	0.98(b)	994(c)	1.05(c)
2640	836(a)	0.86(a)	874(a)	0.93(a)	911(a)	1.00(a)	946(c)	1.07(c)	980(c)	1.14(c)	1014(c)	1.21(c)	1047(c)	1.28(c)
2880	905(c)	1.10(c)	940(c)	1.17(c)	974(c)	1.25(c)	1008(c)	1.33(c)	1039(c)	1.40(c)	1071(c)	1.48(c)	1102(d)	1.56(d)

4. *Includes wet coil, no filter*

Table 172. Fan performance 6 tons GEHE072 (includes wet coil, no filter) (continued)

Std Airflow CFM	Unit External Static Pressure inches W.G. (Wet Coil, No Drive Loss Included & No Return Air Filter)													
	0.1		0.2		0.3		0.4		0.5		0.6		0.7	
	RPM	BHP	RPM	BHP	RPM	BHP	RPM	BHP	RPM	BHP	RPM	BHP	RPM	BHP

Std Airflow CFM	Unit External Static Pressure inches W.G. (Wet Coil, No Drive Loss Included & No Return Air Filter)											
	0.8		0.9		1.0		1.1		1.2		1.3	
	RPM	BHP	RPM	BHP	RPM	BHP	RPM	BHP	RPM	BHP	RPM	BHP
1920	941(b)	0.74(b)	979(b)	0.80(b)	1027(b)	0.89(b)	1077(b)	0.98(b)	1120(c)	1.06(c)	1159(c)	1.14(c)
2160	982(b)	0.91(b)	1018(b)	0.98(b)	1053(c)	1.05(c)	1087(c)	1.12(c)	1122(c)	1.19(c)	1171(c)	1.30(c)
2400	1029(c)	1.12(c)	1062(c)	1.19(c)	1095(c)	1.26(c)	1128(c)	1.33(c)	1159(c)	1.41(c)	1191(c)	1.49(c)
2640	1078(c)	1.36(c)	1111(c)	1.44(c)	1142(d)	1.51(d)	1171(d)	1.59(d)	1202(d)	1.67(d)	1231(d)	1.75(d)
2880	1132(d)	1.64(d)	1161(d)	1.72(d)	1191(d)	1.80(d)	1220(d)	1.89(d)	1248(d)	1.97(d)	—	—

	Digit 12 - Drive Package	
Legend	single speed motor	two speed motor
(a)	A	1
(b)	B	2
(c)	C	3
(d)	D	4

Figure 15. Fan performance curve (top supply) 6 tons GEV072[5]

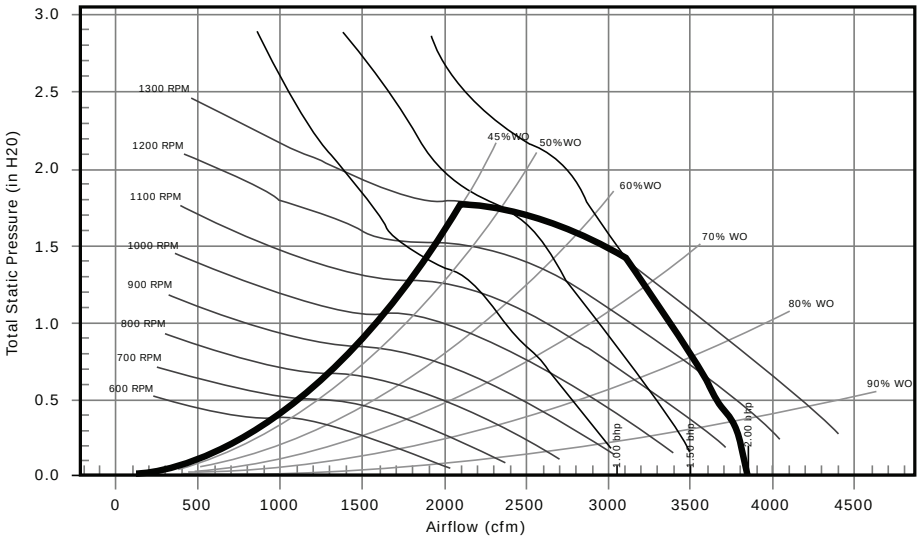

Table 173. Fan performance (top supply) 6 tons GEV072 (includes wet coil, no filter)

Std Airflow CFM	Unit External Static Pressure inches W.G. (Wet Coil, No Drive Loss Included & No Return Air Filter)													
	0.1		0.2		0.3		0.4		0.5		0.6		0.7	
	RPM	BHP	RPM	BHP	RPM	BHP	RPM	BHP	RPM	BHP	RPM	BHP	RPM	BHP
1920	595(a)	0.27(a)	649(a)	0.32(a)	698(a)	0.36(a)	744(a)	0.40(a)	788(a)	0.45(a)	830(a)	0.50(a)	871(a)	0.55(a)
2160	655(a)	0.37(a)	705(a)	0.42(a)	751(a)	0.47(a)	794(a)	0.52(a)	835(a)	0.57(a)	874(a)	0.63(a)	912(b)	0.68(b)
2400	717(a)	0.50(a)	763(a)	0.56(a)	806(a)	0.61(a)	846(a)	0.67(a)	884(a)	0.72(a)	921(b)	0.78(b)	957(b)	0.83(b)

5. *Includes wet coil, no filter*

Table 173. Fan performance (top supply) 6 tons GEV072 (includes wet coil, no filter) (continued)

Std Airflow CFM	Unit External Static Pressure inches W.G. (Wet Coil, No Drive Loss Included & No Return Air Filter)													
	0.1		0.2		0.3		0.4		0.5		0.6		0.7	
	RPM	BHP	RPM	BHP	RPM	BHP	RPM	BHP	RPM	BHP	RPM	BHP	RPM	BHP
2640	780(a)	0.65(a)	822(a)	0.71(a)	862(a)	0.78(a)	900(b)	0.84(b)	937(b)	0.90(b)	971(b)	0.96(b)	1005(c)	1.02(c)
2880	844(a)	0.84(a)	882(a)	0.90(a)	920(b)	0.97(b)	956(c)	1.04(c)	990(c)	1.10(c)	1023(c)	1.17(c)	1055(c)	1.23(c)

Std Airflow CFM	Unit External Static Pressure inches W.G. (Wet Coil, No Drive Loss Included & No Return Air Filter)											
	0.8		0.9		1.0		1.1		1.2		1.3	
	RPM	BHP	RPM	BHP	RPM	BHP	RPM	BHP	RPM	BHP	RPM	BHP
1920	912(b)	0.60(b)	953(b)	0.65(b)	993(b)	0.70(b)	1034(b)	0.76(b)	1072(b)	0.84(b)	1111(b)	0.92(b)
2160	949(b)	0.74(b)	985(b)	0.79(b)	1021(b)	0.85(b)	1058(b)	0.90(b)	1094(b)	0.95(b)	1129(c)	1.02(c)
2400	991(b)	0.89(b)	1024(b)	0.96(b)	1057(c)	1.02(c)	1091(c)	1.08(c)	1123(c)	1.14(c)	1157(c)	1.20(c)
2640	1038(c)	1.08(c)	1069(c)	1.15(c)	1100(c)	1.21(c)	1130(c)	1.28(c)	1161(c)	1.35(c)	1191(c)	1.42(c)
2880	1086(c)	1.30(c)	1116(c)	1.36(c)	1145(c)	1.43(c)	1175(d)	1.51(d)	1203(d)	1.58(d)	1231(d)	1.66(d)

	Digit 12 - Drive Package	
Legend	single speed motor	two speed motor
(a)	A	1
(b)	B	2
(c)	C	3
(d)	D	4

Figure 16. Fan performance curve (front/back supply) 6 tons GEV072[6]

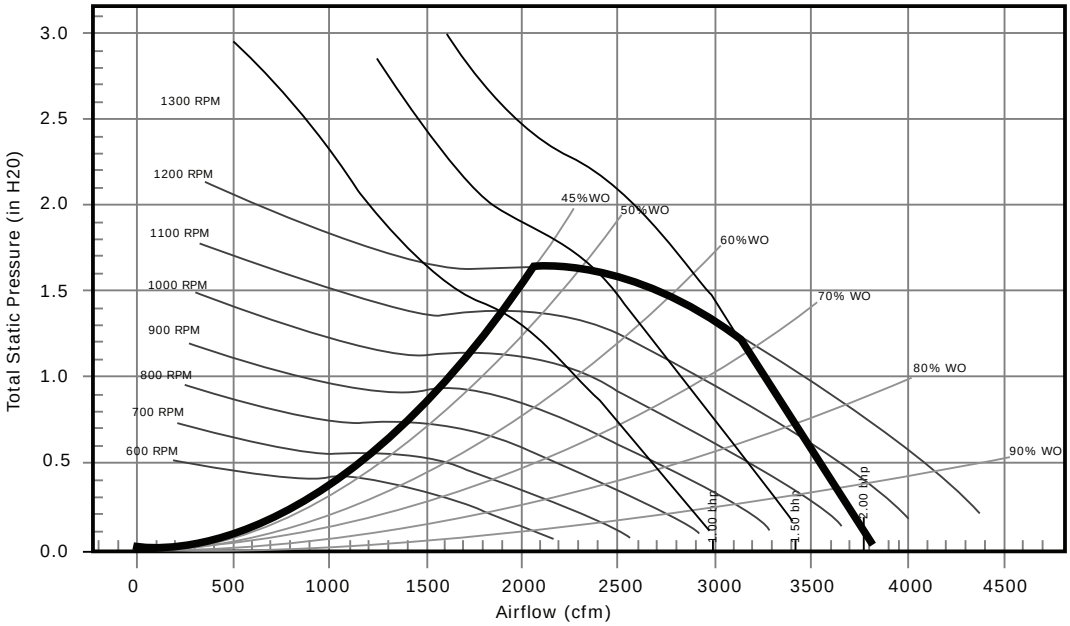

6. *Includes wet coil, no filter*

Table 174. Fan performance (front/back supply) 6 tons GEVE072 (includes wet coil, no filter)

Std Airflow CFM	Unit External Static Pressure inches W.G. (Wet Coil, No Drive Loss Included & No Return Air Filter)													
	0.1		0.2		0.3		0.4		0.5		0.6		0.7	
	RPM	BHP	RPM	BHP	RPM	BHP	RPM	BHP	RPM	BHP	RPM	BHP	RPM	BHP
1920	559(a)	0.30(a)	611(a)	0.34(a)	660(a)	0.39(a)	706(a)	0.44(a)	749(a)	0.48(a)	790(a)	0.53(a)	831(a)	0.59(a)
2160	616(a)	0.41(a)	663(a)	0.46(a)	708(a)	0.51(a)	751(a)	0.56(a)	792(a)	0.62(a)	830(a)	0.67(a)	867(a)	0.73(a)
2400	674(a)	0.55(a)	717(a)	0.60(a)	759(a)	0.66(a)	799(a)	0.72(a)	837(a)	0.78(a)	873(a)	0.84(a)	909(b)	0.90(b)
2640	733(a)	0.71(a)	773(a)	0.78(a)	811(a)	0.84(a)	849(a)	0.90(a)	884(a)	0.97(a)	919(c)	1.03(c)	953(c)	1.10(c)
2880	793(a)	0.91(a)	830(a)	0.98(a)	865(c)	1.05(c)	900(c)	1.12(c)	934(c)	1.19(c)	966(c)	1.26(c)	998(c)	1.33(c)

Std Airflow CFM	Unit External Static Pressure inches W.G. (Wet Coil, No Drive Loss Included & No Return Air Filter)											
	0.8		0.9		1.0		1.1		1.2		1.3	
	RPM	BHP	RPM	BHP	RPM	BHP	RPM	BHP	RPM	BHP	RPM	BHP
1920	869(a)	0.64(a)	907(b)	0.70(b)	947(b)	0.76(b)	988(b)	0.83(b)	1030(b)	0.90(b)	1068(b)	0.97(b)
2160	904(b)	0.78(b)	939(b)	0.84(b)	974(b)	0.91(b)	1008(b)	0.97(b)	1042(c)	1.04(c)	1079(c)	1.11(c)
2400	943(b)	0.96(b)	975(c)	1.02(c)	1007(c)	1.08(c)	1040(c)	1.15(c)	1071(c)	1.22(c)	1102(c)	1.29(c)
2640	985(c)	1.16(c)	1016(c)	1.23(c)	1046(c)	1.29(c)	1076(c)	1.36(c)	1106(c)	1.43(c)	1135(d)	1.51(d)
2880	1029(c)	1.40(c)	1060(c)	1.47(c)	1088(d)	1.54(d)	1116(d)	1.61(d)	1144(d)	1.69(d)	1172(d)	1.77(d)

	Digit 12 - Drive Package	
Legend	single speed motor	two speed motor
(a)	A	1
(b)	B	2
(c)	C	3
(d)	D	4

Figure 17. Fan performance curve 7.5 tons GEHE090[7]

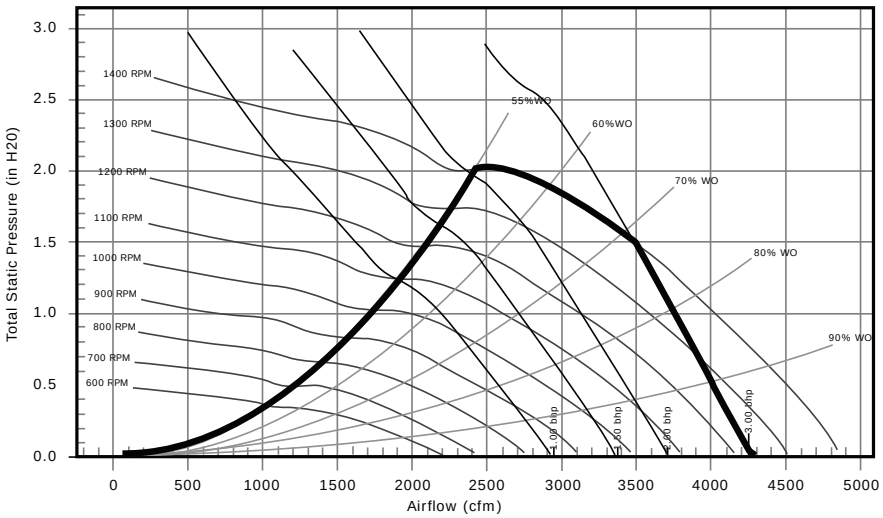

7. *Includes wet coil, no filter*

Table 175. Fan performance 7.5 tons GEHE090 (includes wet coil, no filter)

Std Airflow CFM	Unit External Static Pressure inches W.G. (Wet Coil, No Drive Loss Included & No Return Air Filter)															
	0.1		0.2		0.3		0.4		0.5		0.6		0.7		0.8	
	RPM	BHP	RPM	BHP	RPM	BHP	RPM	BHP	RPM	BHP	RPM	BHP	RPM	BHP	RPM	BHP
2400	727(a)	0.59(a)	769(a)	0.65(a)	810(a)	0.72(a)	849(a)	0.78(a)	886(a)	0.84(a)	923(a)	0.90(a)	958(a)	0.96(a)	993(c)	1.03(c)
2700	809(a)	0.82(a)	845(a)	0.89(a)	883(a)	0.96(a)	919(b)	1.03(b)	953(b)	1.10(b)	986(c)	1.17(c)	1018(c)	1.24(c)	1051(c)	1.31(c)
3000	891(b)	1.11(b)	924(b)	1.19(b)	957(b)	1.26(b)	991(c)	1.34(c)	1023(c)	1.42(c)	1053(c)	1.50(c)	1083(d)	1.57(d)	1113(d)	1.65(d)
3300	975(b)	1.47(b)	1003(d)	1.54(d)	1033(d)	1.63(d)	1064(d)	1.71(d)	1095(d)	1.80(d)	1124(d)	1.89(d)	1152(d)	1.97(d)	1179(e)	2.06(e)
3600	1059(d)	1.89(d)	1084(d)	1.97(d)	1111(e)	2.06(e)	1140(e)	2.15(e)	1168(e)	2.25(e)	1196(e)	2.35(e)	1222(e)	2.44(e)	1248(e)	2.53(e)

Std Airflow CFM	Unit External Static Pressure inches W.G. (Wet Coil, No Drive Loss Included & No Return Air Filter)													
	0.9		1.0		1.1		1.2		1.3		1.4		1.5	
	RPM	BHP	RPM	BHP	RPM	BHP	RPM	BHP	RPM	BHP	RPM	BHP	RPM	BHP
2400	1026(c)	1.09(c)	1059(c)	1.16(c)	1091(c)	1.23(c)	1123(c)	1.30(c)	1154(c)	1.37(c)	1185(c)	1.45(c)	1217(d)	1.53(d)
2700	1082(c)	1.38(c)	1113(c)	1.45(c)	1143(d)	1.53(d)	1172(d)	1.60(d)	1202(d)	1.68(d)	1230(d)	1.76(d)	1257(d)	1.83(d)
3000	1143(d)	1.73(d)	1171(d)	1.81(d)	1199(d)	1.89(d)	1228(d)	1.97(d)	1255(e)	2.05(e)	1281(e)	2.13(e)	1308(e)	2.21(e)
3300	1206(e)	2.14(e)	1233(e)	2.22(e)	1259(e)	2.31(e)	1286(e)	2.40(e)	1312(e)	2.49(e)	1337(e)	2.57(e)	1362(e)	2.66(e)
3600	1273(e)	2.62(e)	1298(e)	2.71(e)	1323(e)	2.81(e)	1348(e)	2.90(e)	1372(e)	2.99(e)	—	—	—	—

	Digit 12 - Drive Package	
Legend	single speed motor	two speed motor
(a)	A	1
(b)	B	2
(c)	C	3
(d)	D	4
(e)	E	5

Figure 18. Fan performance curve (top supply) 7.5 tons GEVE090[8]

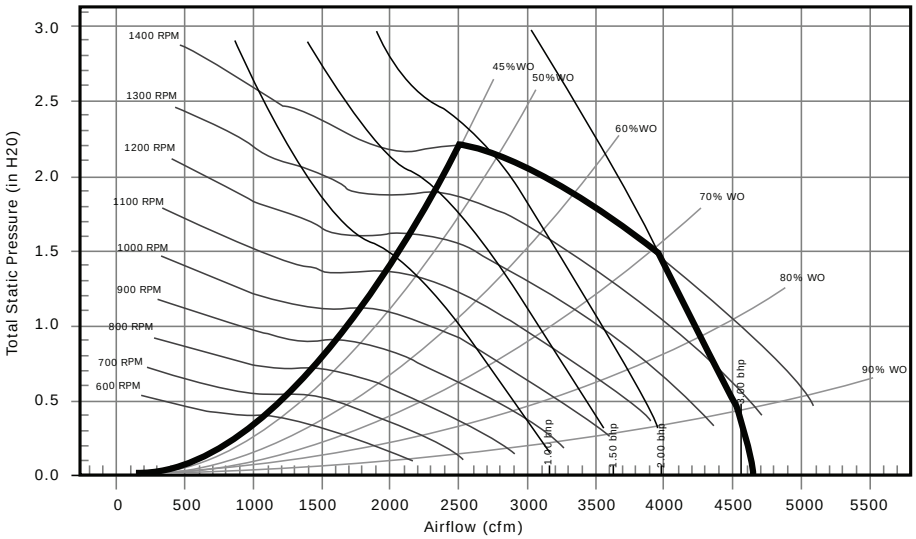

8. *Includes wet coil, no filter*

Table 176. Fan performance (top supply) 7.5 tons GEVE090 (includes wet coil, no filter)

Std Airflow CFM	Unit External Static Pressure inches W.G. (Wet Coil, No Drive Loss Included & No Return Air Filter)															
	0.1		0.2		0.3		0.4		0.5		0.6		0.7		0.8	
	RPM	BHP	RPM	BHP	RPM	BHP	RPM	BHP	RPM	BHP	RPM	BHP	RPM	BHP	RPM	BHP
2400	655(a)	0.44(a)	703(a)	0.49(a)	748(a)	0.54(a)	790(a)	0.59(a)	830(a)	0.64(a)	868(b)	0.70(b)	905(b)	0.75(b)	941(b)	0.81(b)
2700	725(a)	0.61(a)	768(a)	0.66(a)	809(a)	0.72(a)	849(b)	0.78(b)	886(b)	0.84(b)	922(b)	0.90(b)	957(b)	0.96(b)	990(c)	1.02(c)
3000	797(a)	0.82(a)	836(a)	0.88(a)	873(b)	0.94(b)	910(c)	1.01(c)	945(c)	1.07(c)	979(c)	1.14(c)	1012(c)	1.20(c)	1043(d)	1.27(d)
3300	869(c)	1.07(c)	904(c)	1.14(c)	939(c)	1.21(c)	973(c)	1.28(c)	1006(c)	1.35(c)	1039(c)	1.43(c)	1069(d)	1.50(d)	1099(e)	1.57(e)
3600	942(c)	1.38(c)	974(c)	1.45(c)	1007(e)	1.53(e)	1038(e)	1.61(e)	1069(e)	1.68(e)	1099(e)	1.76(e)	1129(e)	1.84(e)	1157(e)	1.92(e)

Std Airflow CFM	Unit External Static Pressure inches W.G. (Wet Coil, No Drive Loss Included & No Return Air Filter)													
	0.9		1.0		1.1		1.2		1.3		1.4		1.5	
	RPM	BHP	RPM	BHP	RPM	BHP	RPM	BHP	RPM	BHP	RPM	BHP	RPM	BHP
2400	977(b)	0.86(b)	1012(b)	0.92(b)	1045(b)	0.98(b)	1078(d)	1.04(d)	1111(d)	1.11(d)	1144(d)	1.17(d)	1177(d)	1.24(d)
2700	1023(c)	1.08(c)	1055(d)	1.14(d)	1087(d)	1.21(d)	1118(d)	1.27(d)	1147(d)	1.34(d)	1178(d)	1.41(d)	1207(d)	1.47(d)
3000	1074(d)	1.33(d)	1104(d)	1.40(d)	1133(d)	1.47(d)	1162(e)	1.54(e)	1191(e)	1.61(e)	1219(e)	1.68(e)	1246(e)	1.76(e)
3300	1128(e)	1.64(e)	1157(e)	1.71(e)	1184(e)	1.79(e)	1211(e)	1.86(e)	1238(e)	1.94(e)	1265(f)	2.01(f)	1291(f)	2.09(f)
3600	1185(e)	1.99(e)	1212(f)	2.07(f)	1239(f)	2.15(f)	1264(f)	2.23(f)	1290(f)	2.31(f)	1315(f)	2.39(f)	1340(f)	2.48(f)

	Digit 12 - Drive Package	
Legend	single speed motor	two speed motor
(a)	A	1
(b)	B	2
(c)	C	3
(d)	D	4
(e)	E	5
(f)	F	6

Figure 19. Fan performance curve (front/back supply) 7.5 tons GEV090[9]

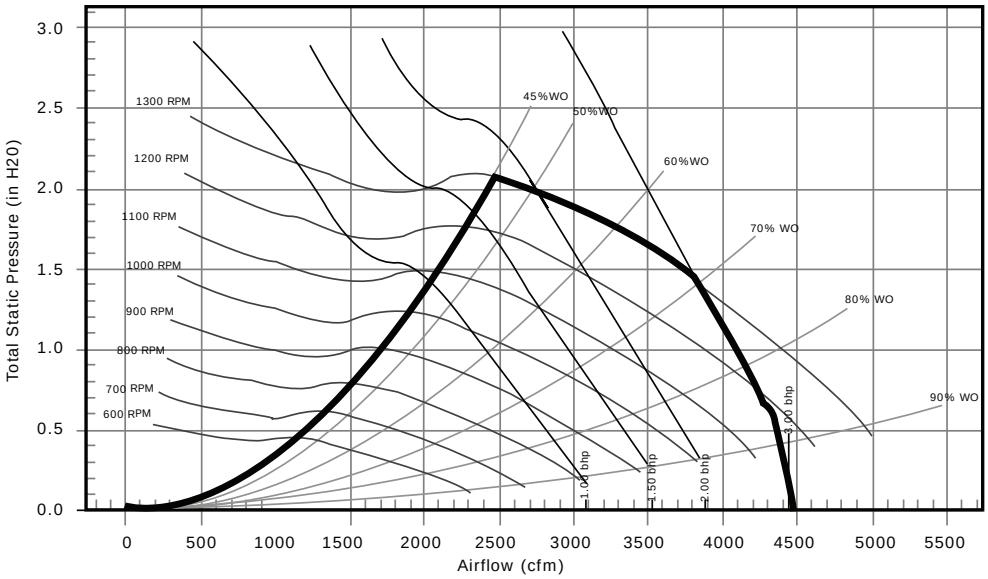

Table 177. Fan performance (front/back supply) 7.5 tons GEVE090 (includes wet coil, no filter)

Std Airflow CFM	Unit External Static Pressure inches W.G. (Wet Coil, No Drive Loss Included & No Return Air Filter)															
	0.1		0.2		0.3		0.4		0.5		0.6		0.7		0.8	
	RPM	BHP	RPM	BHP	RPM	BHP	RPM	BHP	RPM	BHP	RPM	BHP	RPM	BHP	RPM	BHP
2400	620(a)	0.47(a)	666(a)	0.53(a)	709(a)	0.58(a)	750(a)	0.64(a)	790(a)	0.70(a)	828(a)	0.76(a)	864(a)	0.82(a)	900(a)	0.88(a)
2700	687(a)	0.66(a)	728(a)	0.72(a)	767(a)	0.78(a)	805(a)	0.84(a)	842(a)	0.91(a)	877(a)	0.97(a)	912(c)	1.04(c)	945(c)	1.11(c)
3000	754(a)	0.88(a)	792(a)	0.95(a)	828(b)	1.02(b)	863(b)	1.09(b)	897(b)	1.16(b)	930(c)	1.23(c)	962(c)	1.31(c)	993(c)	1.38(c)
3300	822(b)	1.16(b)	857(b)	1.24(b)	890(b)	1.31(b)	922(c)	1.39(c)	954(c)	1.46(c)	984(d)	1.54(d)	1015(d)	1.62(d)	1044(d)	1.70(d)
3600	891(b)	1.49(b)	922(d)	1.57(d)	954(d)	1.66(d)	984(d)	1.74(d)	1013(d)	1.82(d)	1042(d)	1.90(d)	1070(d)	1.98(d)	1098(e)	2.07(e)

Std Airflow CFM	Unit External Static Pressure inches W.G. (Wet Coil, No Drive Loss Included & No Return Air Filter)													
	0.9		1.0		1.1		1.2		1.3		1.4		1.5	
	RPM	BHP	RPM	BHP	RPM	BHP	RPM	BHP	RPM	BHP	RPM	BHP	RPM	BHP
2400	934(a)	0.95(a)	966(c)	1.01(c)	999(c)	1.07(c)	1031(c)	1.13(c)	1063(c)	1.19(c)	1093(c)	1.25(c)	1124(c)	1.31(c)
2700	977(c)	1.18(c)	1008(c)	1.25(c)	1039(c)	1.32(c)	1068(c)	1.39(c)	1098(c)	1.46(c)	1126(d)	1.53(d)	1154(d)	1.59(d)
3000	1024(c)	1.46(c)	1053(d)	1.53(d)	1083(d)	1.61(d)	1111(d)	1.69(d)	1138(d)	1.77(d)	1166(d)	1.84(d)	1192(d)	1.92(d)
3300	1074(d)	1.78(d)	1102(d)	1.86(d)	1129(d)	1.95(d)	1156(e)	2.03(e)	1182(e)	2.12(e)	1208(e)	2.20(e)	1233(e)	2.28(e)
3600	1125(e)	2.16(e)	1152(e)	2.25(e)	1178(e)	2.34(e)	1204(e)	2.43(e)	1230(e)	2.52(e)	1255(e)	2.61(e)	1279(e)	2.70(e)

	Digit 12 - Drive Package	
Legend	single speed motor	two speed motor
(a)	A	1
(b)	B	2
(c)	C	3
(d)	D	4
(e)	E	5

9. *Includes wet coil, no filter*

Figure 20. Fan performance curve 10 tons GEHE120[10]

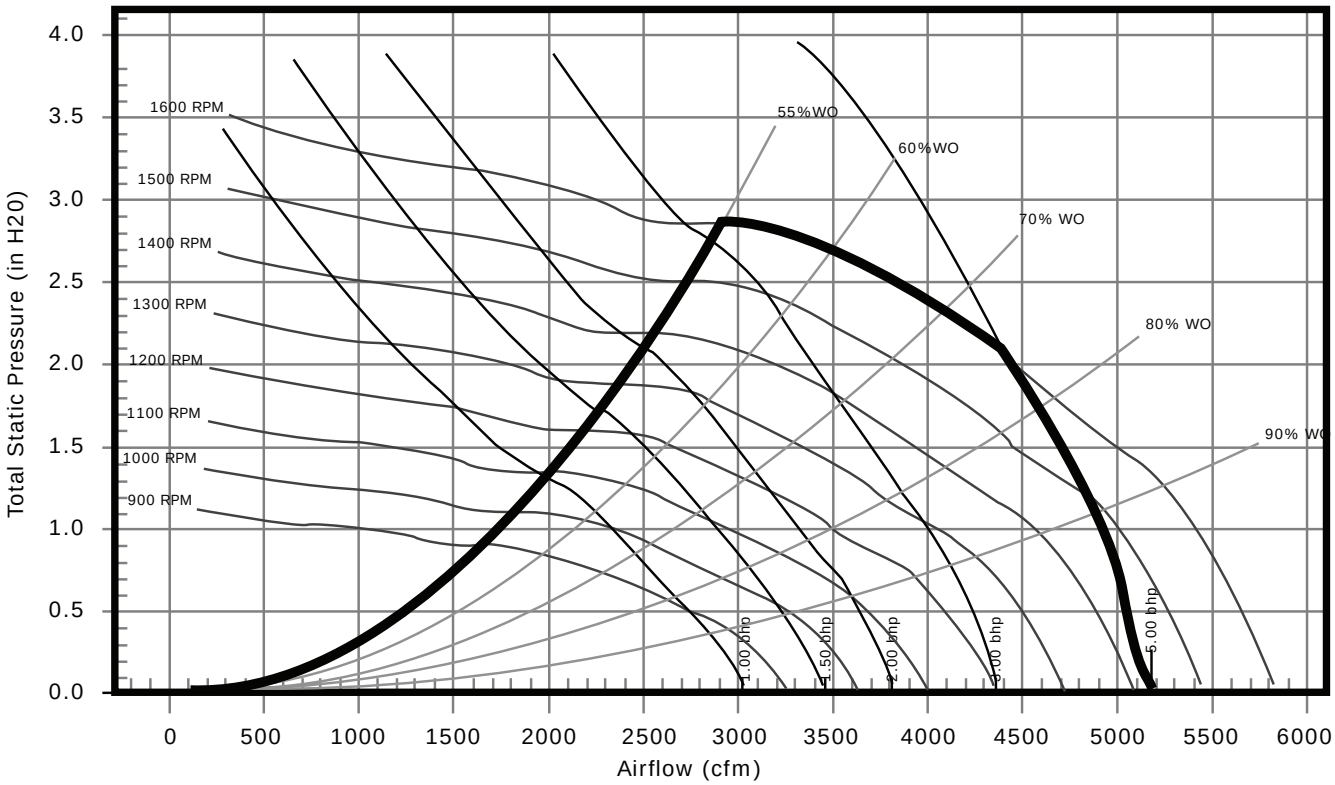

Table 178. Fan performance 10 tons GEHE120 (includes wet coil, no filter)

Std Airflow CFM	Unit External Static Pressure inches W.G. (Wet Coil, No Drive Loss Included & No Return Air Filter)															
	0.1		0.2		0.3		0.4		0.5		0.6		0.7		0.8	
	RPM	BHP	RPM	BHP	RPM	BHP	RPM	BHP	RPM	BHP	RPM	BHP	RPM	BHP	RPM	BHP
3200	897(a)	1.23(a)	916(a)	1.27(a)	935(a)	1.31(a)	958(a)	1.36(a)	987(a)	1.43(a)	1018(b)	1.51(b)	1051(b)	1.60(b)	1081(b)	1.68(b)
3600	1005(b)	1.74(b)	1022(b)	1.78(b)	1038(b)	1.83(b)	1055(b)	1.87(b)	1076(b)	1.94(b)	1102(c)	2.01(c)	1129(c)	2.10(c)	1158(c)	2.20(c)
4000	1114(c)	2.37(c)	1128(c)	2.42(c)	1143(c)	2.47(c)	1158(c)	2.52(c)	1173(c)	2.57(c)	1192(c)	2.64(c)	1214(c)	2.72(c)	1238(c)	2.82(c)
4400	1222(e)	3.15(e)	1235(e)	3.20(e)	1249(e)	3.26(e)	1262(e)	3.31(e)	1276(e)	3.37(e)	1290(e)	3.42(e)	1306(e)	3.49(e)	1326(e)	3.58(e)
4800	1331(e)	4.08(e)	1343(f)	4.14(f)	1355(f)	4.19(f)	1367(f)	4.25(f)	1380(f)	4.31(f)	1392(f)	4.37(f)	1405(f)	4.43(f)	1419(f)	4.50(f)
Std Airflow CFM	Unit External Static Pressure inches W.G. (Wet Coil, No Drive Loss Included & No Return Air Filter)															
	0.9		1.0		1.1		1.2		1.3		1.4		1.5		1.6	
	RPM	BHP	RPM	BHP	RPM	BHP	RPM	BHP	RPM	BHP	RPM	BHP	RPM	BHP	RPM	BHP
3200	1109(b)	1.76(b)	1138(b)	1.84(b)	1164(b)	1.92(b)	1192(c)	2.01(c)	1219(c)	2.09(c)	1246(c)	2.17(c)	1272(c)	2.25(c)	1298(c)	2.34(c)
3600	1186(c)	2.29(c)	1213(c)	2.39(c)	1239(c)	2.48(c)	1264(c)	2.57(c)	1288(c)	2.65(c)	1312(c)	2.74(c)	1336(f)	2.83(f)	1361(f)	2.93(f)
4000	1264(c)	2.92(c)	1289(e)	3.02(e)	1315(f)	3.13(f)	1340(f)	3.24(f)	1363(f)	3.34(f)	1385(f)	3.43(f)	1408(f)	3.54(f)	1429(f)	3.63(f)
4400	1347(e)	3.68(e)	1369(f)	3.78(f)	1392(f)	3.90(f)	1416(f)	4.02(f)	1440(f)	4.13(f)	1463(f)	4.25(f)	1484(f)	4.36(f)	1505(f)	4.47(f)
4800	1437(e)	4.60(e)	1455(f)	4.70(f)	1475(f)	4.81(f)	1496(f)	4.93(f)	—	—	—	—	—	—	—	—

[10] *Includes wet coil, no filter*

Table 178. Fan performance 10 tons GEHE120 (includes wet coil, no filter) (continued)

Std Airflow CFM	Unit External Static Pressure inches W.G. (Wet Coil, No Drive Loss Included & No Return Air Filter)															
	0.1		0.2		0.3		0.4		0.5		0.6		0.7		0.8	
	RPM	BHP	RPM	BHP	RPM	BHP	RPM	BHP	RPM	BHP	RPM	BHP	RPM	BHP	RPM	BHP

Std Airflow CFM	Unit External Static Pressure inches W.G. (Wet Coil, No Drive Loss Included & No Return Air Filter)							
	1.7		1.8		1.9		2.0	
	RPM	BHP	RPM	BHP	RPM	BHP	RPM	BHP
3200	1323(d)	2.42(d)	1349(d)	2.51(d)	1374(d)	2.60(d)	1398(d)	2.68(d)
3600	1384(f)	3.02(f)	1408(f)	3.12(f)	1431(f)	3.21(f)	1454(f)	3.30(f)
4000	1452(f)	3.74(f)	1474(f)	3.84(f)	1496(f)	3.94(f)	1517(f)	4.04(f)
4400	1526(f)	4.58(f)	1546(f)	4.69(f)	1565(f)	4.80(f)	1586(f)	4.91(f)
4800	—	—	—	—	—	—	—	—

	Digit 12 - Drive Package	
Legend	single speed motor	two speed motor
(a)	A	1
(b)	B	2
(c)	C	3
(d)	D	4
(e)	E	5
(f)	F	6

Figure 21. Fan performance curve (top supply) 10 tons GEVE120[11]

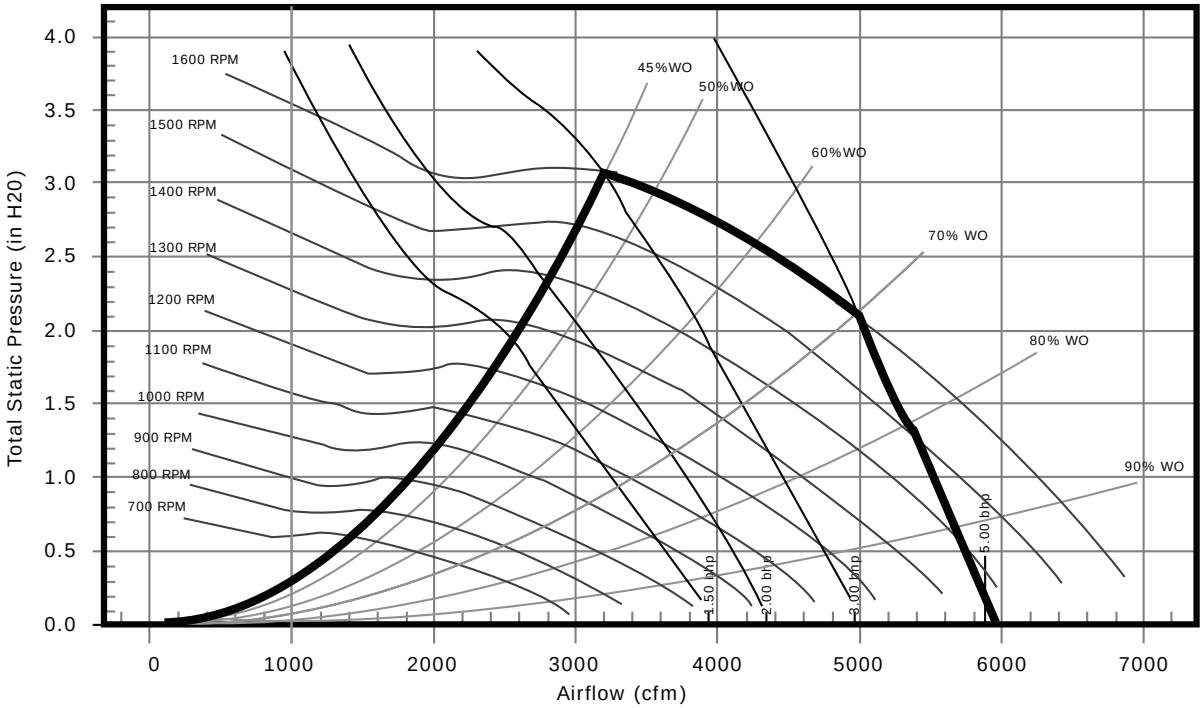

[11] *Includes wet coil, no filter*

Table 179. Fan performance (top supply) 10 tons GEVE120 (includes wet coil, no filter)

Std Airflow CFM	Unit External Static Pressure inches W.G. (Wet Coil, No Drive Loss Included & No Return Air Filter)															
	0.1		0.2		0.3		0.4		0.5		0.6		0.7		0.8	
	RPM	BHP	RPM	BHP	RPM	BHP	RPM	BHP	RPM	BHP	RPM	BHP	RPM	BHP	RPM	BHP
3200	759(a)	0.83(a)	797(a)	0.89(a)	833(a)	0.95(a)	868(a)	1.01(a)	903(a)	1.08(a)	937(a)	1.16(a)	970(a)	1.22(a)	1003(a)	1.29(a)
3600	845(a)	1.16(a)	878(a)	1.23(a)	912(a)	1.30(a)	944(a)	1.36(a)	975(a)	1.44(a)	1006(b)	1.51(b)	1036(c)	1.59(c)	1066(c)	1.68(c)
4000	932(b)	1.58(b)	962(b)	1.66(b)	992(b)	1.73(b)	1021(b)	1.80(b)	1050(b)	1.87(b)	1079(b)	1.95(b)	1106(d)	2.04(d)	1134(d)	2.13(d)
4400	1019(d)	2.08(d)	1046(d)	2.17(d)	1074(d)	2.25(d)	1101(d)	2.33(d)	1128(d)	2.41(d)	1154(d)	2.49(d)	1180(d)	2.58(d)	1205(d)	2.67(d)
4800	1108(d)	2.69(d)	1132(d)	2.78(d)	1157(d)	2.87(d)	1182(d)	2.96(d)	1207(f)	3.05(f)	1232(f)	3.14(f)	1256(f)	3.22(f)	1279(f)	3.31(f)

Std Airflow CFM	Unit External Static Pressure inches W.G. (Wet Coil, No Drive Loss Included & No Return Air Filter)															
	0.9		1.0		1.1		1.2		1.3		1.4		1.5		1.6	
	RPM	BHP	RPM	BHP	RPM	BHP	RPM	BHP	RPM	BHP	RPM	BHP	RPM	BHP	RPM	BHP
3200	1035(a)	1.35(a)	1065(a)	1.42(a)	1095(a)	1.49(a)	1124(c)	1.56(c)	1153(c)	1.63(c)	1181(c)	1.70(c)	1208(c)	1.77(c)	1234(c)	1.84(c)
3600	1096(c)	1.75(c)	1125(c)	1.82(c)	1154(c)	1.89(c)	1181(c)	1.97(c)	1207(d)	2.04(d)	1234(d)	2.13(d)	1260(d)	2.21(d)	1285(d)	2.29(d)
4000	1161(d)	2.22(d)	1188(d)	2.32(d)	1215(d)	2.40(d)	1241(d)	2.47(d)	1266(d)	2.55(d)	1293(d)	2.63(d)	1316(d)	2.71(d)	1341(e)	2.81(e)
4400	1230(d)	2.76(d)	1255(d)	2.87(d)	1280(d)	2.97(d)	1304(f)	3.07(f)	1329(f)	3.16(f)	1353(g)	3.25(g)	1376(g)	3.33(g)	1399(g)	3.41(g)
4800	1303(f)	3.41(f)	1326(f)	3.51(f)	1349(f)	3.62(f)	1371(g)	3.73(g)	1394(g)	3.85(g)	1417(g)	3.96(g)	1439(g)	4.06(g)	1461(g)	4.16(g)

Std Airflow CFM	Unit External Static Pressure inches W.G. (Wet Coil, No Drive Loss Included & No Return Air Filter)							
	1.7		1.8		1.9		2.0	
	RPM	BHP	RPM	BHP	RPM	BHP	RPM	BHP
3200	1261(c)	1.91(c)	1286(c)	1.98(c)	1313(d)	2.06(d)	1336(e)	2.13(e)
3600	1310(d)	2.37(d)	1335(d)	2.45(d)	1359(e)	2.52(e)	1382(e)	2.60(e)
4000	1365(e)	2.90(e)	1387(e)	2.99(e)	1411(g)	3.08(g)	1434(g)	3.16(g)
4400	1422(g)	3.50(g)	1445(g)	3.60(g)	1467(g)	3.69(g)	1488(g)	3.79(g)
4800	1483(g)	4.25(g)	1505(g)	4.34(g)	1525(g)	4.43(g)	1547(g)	4.52(g)

	Digit 12 - Drive Package	
Legend	single speed motor	two speed motor
(a)	A	1
(b)	B	2
(c)	C	3
(d)	D	4
(e)	E	5
(f)	F	6
(g)	G	7

Figure 22. Fan performance curve (front/back supply) 10 tons GEVE120[12]

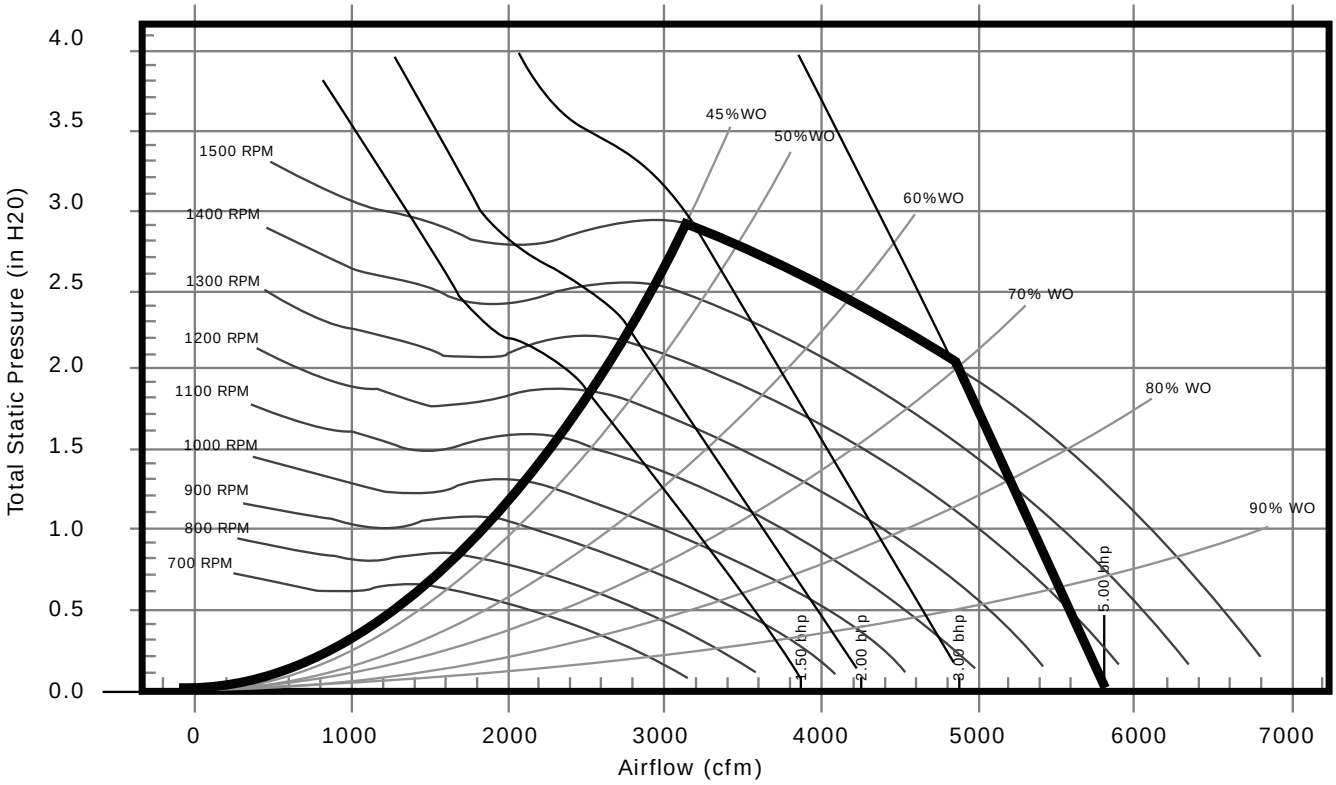

Table 180. Fan performance (front/back supply) 10 tons GEVE120 (includes wet coil, no filter)

Std Airflow CFM	Unit External Static Pressure inches W.G. (Wet Coil, No Drive Loss Included & No Return Air Filter)															
	0.1		0.2		0.3		0.4		0.5		0.6		0.7		0.8	
	RPM	BHP	RPM	BHP	RPM	BHP	RPM	BHP	RPM	BHP	RPM	BHP	RPM	BHP	RPM	BHP
3200	727(a)	0.90(a)	761(a)	0.96(a)	794(a)	1.03(a)	829(a)	1.10(a)	863(a)	1.17(a)	896(a)	1.24(a)	929(a)	1.31(a)	962(a)	1.38(a)
3600	809(a)	1.26(a)	840(a)	1.33(a)	870(a)	1.41(a)	900(a)	1.48(a)	931(b)	1.56(b)	961(b)	1.64(b)	991(b)	1.71(b)	1021(c)	1.79(c)
4000	893(b)	1.71(b)	920(b)	1.79(b)	947(b)	1.87(b)	974(b)	1.96(b)	1001(d)	2.04(d)	1029(d)	2.12(d)	1057(d)	2.21(d)	1084(d)	2.30(d)
4400	977(d)	2.25(d)	1002(d)	2.34(d)	1027(d)	2.44(d)	1051(d)	2.53(d)	1076(d)	2.62(d)	1100(d)	2.71(d)	1126(d)	2.80(d)	1151(d)	2.90(d)
4800	1061(d)	2.91(d)	1084(f)	3.01(f)	1107(f)	3.11(f)	1130(f)	3.21(f)	1152(f)	3.30(f)	1175(f)	3.40(f)	1198(f)	3.51(f)	1220(f)	3.61(f)
Std Airflow CFM	**Unit External Static Pressure inches W.G. (Wet Coil, No Drive Loss Included & No Return Air Filter)**															
	0.9		1.0		1.1		1.2		1.3		1.4		1.5		1.6	
	RPM	BHP	RPM	BHP	RPM	BHP	RPM	BHP	RPM	BHP	RPM	BHP	RPM	BHP	RPM	BHP
3200	993(a)	1.45(a)	1023(c)	1.52(c)	1053(c)	1.60(c)	1081(c)	1.67(c)	1109(c)	1.74(c)	1136(c)	1.81(c)	1162(c)	1.88(c)	1189(c)	1.96(c)
3600	1049(c)	1.87(c)	1078(c)	1.95(c)	1106(d)	2.03(d)	1133(d)	2.11(d)	1160(d)	2.20(d)	1187(d)	2.28(d)	1212(d)	2.36(d)	1237(d)	2.44(d)
4000	1111(d)	2.38(d)	1138(d)	2.47(d)	1163(d)	2.56(d)	1190(d)	2.65(d)	1214(d)	2.74(d)	1239(d)	2.83(d)	1264(e)	2.92(e)	1288(e)	3.01(e)
4400	1176(d)	2.99(d)	1201(f)	3.09(f)	1225(f)	3.18(f)	1248(f)	3.28(f)	1273(g)	3.38(g)	1296(g)	3.47(g)	1319(g)	3.57(g)	1343(g)	3.67(g)
4800	1243(f)	3.71(f)	1266(g)	3.81(g)	1289(g)	3.91(g)	1311(g)	4.02(g)	1334(g)	4.12(g)	1356(g)	4.23(g)	1378(g)	4.33(g)	1399(g)	4.44(g)

[12] *Includes wet coil, no filter*

Table 180. Fan performance (front/back supply) 10 tons GEVE120 (includes wet coil, no filter) (continued)

Std Airflow CFM	Unit External Static Pressure inches W.G. (Wet Coil, No Drive Loss Included & No Return Air Filter)															
	0.1		0.2		0.3		0.4		0.5		0.6		0.7		0.8	
	RPM	BHP	RPM	BHP	RPM	BHP	RPM	BHP	RPM	BHP	RPM	BHP	RPM	BHP	RPM	BHP

Std Airflow CFM	Unit External Static Pressure inches W.G. (Wet Coil, No Drive Loss Included & No Return Air Filter)							
	1.7		1.8		1.9		2.0	
	RPM	BHP	RPM	BHP	RPM	BHP	RPM	BHP
3200	1214(d)	2.03(d)	1239(d)	2.11(d)	1264(e)	2.18(e)	1289(e)	2.27(e)
3600	1260(e)	2.52(e)	1284(e)	2.60(e)	1308(e)	2.68(e)	1332(e)	2.77(e)
4000	1311(g)	3.10(g)	1335(g)	3.19(g)	1357(g)	3.28(g)	1378(g)	3.37(g)
4400	1365(g)	3.77(g)	1387(g)	3.87(g)	1409(g)	3.97(g)	1430(g)	4.07(g)
4800	1422(g)	4.55(g)	1443(g)	4.66(g)	1463(g)	4.76(g)	1483(g)	4.87(g)

	Digit 12 - Drive Package	
Legend	single speed motor	two speed motor
(a)	A	1
(b)	B	2
(c)	C	3
(d)	D	4
(e)	E	5
(f)	F	6
(g)	G	7

Figure 23. Fan performance curve 12.5 tons GEHE150[13]

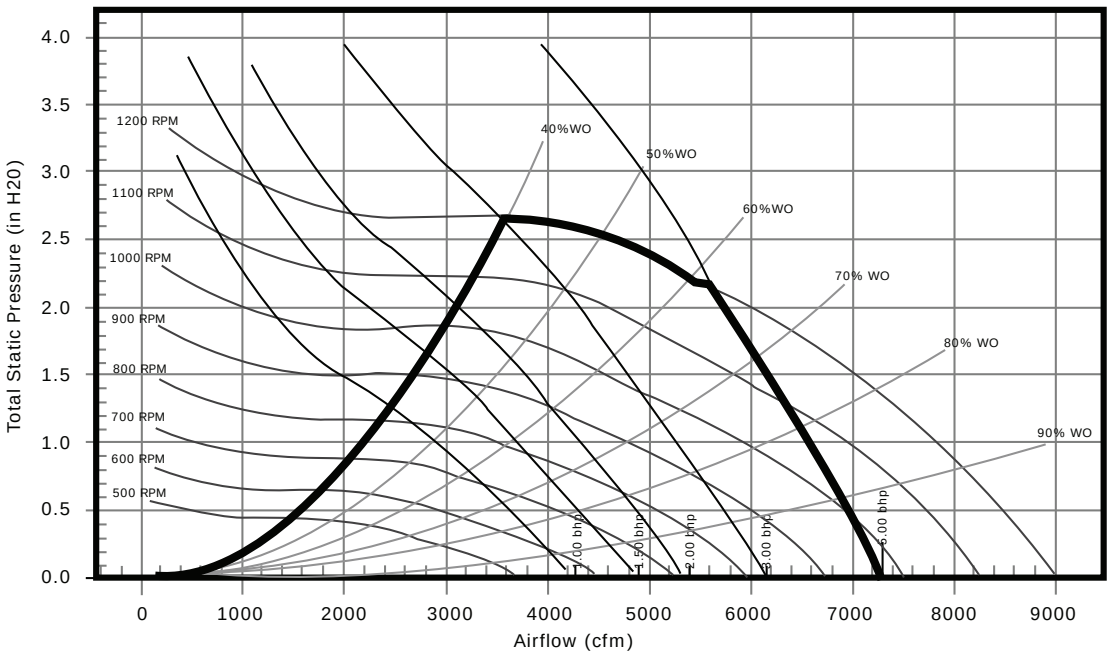

[13] *Includes wet coil, no filter*

Table 181. Fan performance 12.5 tons GEHE150 (includes wet coil, no filter)

Std Airflow CFM	Unit External Static Pressure inches W.G. (Wet Coil, No Drive Loss Included & No Return Air Filter)															
	0.1		0.2		0.3		0.4		0.5		0.6		0.7		0.8	
	RPM	BHP	RPM	BHP	RPM	BHP	RPM	BHP	RPM	BHP	RPM	BHP	RPM	BHP	RPM	BHP
4000	559(a)	0.89(a)	590(a)	0.96(a)	622(a)	1.05(a)	654(a)	1.14(a)	685(a)	1.23(a)	717(a)	1.32(a)	749(a)	1.42(a)	779(b)	1.52(b)
4500	622(a)	1.24(a)	648(a)	1.33(a)	677(a)	1.42(a)	706(b)	1.52(b)	734(b)	1.62(b)	761(b)	1.72(b)	790(b)	1.82(b)	819(b)	1.93(b)
5000	686(b)	1.69(b)	709(b)	1.77(b)	734(b)	1.87(b)	760(b)	1.98(b)	786(c)	2.09(c)	811(c)	2.20(c)	836(c)	2.31(c)	861(c)	2.42(c)
5500	750(c)	2.23(c)	771(c)	2.32(c)	793(c)	2.42(c)	816(c)	2.53(c)	840(c)	2.65(c)	863(c)	2.77(c)	886(c)	2.89(c)	909(e)	3.02(e)
6000	815(c)	2.88(c)	833(c)	2.97(c)	853(e)	3.08(e)	874(e)	3.20(e)	895(e)	3.32(e)	917(e)	3.45(e)	939(e)	3.58(e)	960(e)	3.71(e)

Std Airflow CFM	Unit External Static Pressure inches W.G. (Wet Coil, No Drive Loss Included & No Return Air Filter)															
	0.9		1.0		1.1		1.2		1.3		1.4		1.5		1.6	
	RPM	BHP	RPM	BHP	RPM	BHP	RPM	BHP	RPM	BHP	RPM	BHP	RPM	BHP	RPM	BHP
4000	807(b)	1.61(b)	833(b)	1.71(b)	857(b)	1.80(b)	881(b)	1.89(b)	905(b)	1.98(b)	928(d)	2.07(d)	951(d)	2.16(d)	974(d)	2.26(d)
4500	846(c)	2.04(c)	872(c)	2.15(c)	898(c)	2.26(c)	921(d)	2.36(d)	944(d)	2.46(d)	965(d)	2.56(d)	987(d)	2.66(d)	1009(d)	2.77(d)
5000	887(c)	2.54(c)	912(d)	2.66(d)	937(d)	2.78(d)	962(d)	2.91(d)	985(e)	3.03(e)	1007(e)	3.14(e)	1027(f)	3.26(f)	1047(f)	3.37(f)
5500	932(e)	3.14(e)	954(e)	3.26(e)	978(e)	3.40(e)	1002(e)	3.53(e)	1024(f)	3.66(f)	1047(f)	3.80(f)	1068(f)	3.93(f)	1090(f)	4.07(f)
6000	981(e)	3.85(e)	1002(e)	3.98(e)	1022(f)	4.11(f)	1044(f)	4.26(f)	1065(f)	4.40(f)	1086(f)	4.54(f)	1108(f)	4.69(f)	1128(f)	4.83(f)

Std Airflow CFM	Unit External Static Pressure inches W.G. (Wet Coil, No Drive Loss Included & No Return Air Filter)							
	1.7		1.8		1.9		2.0	
	RPM	BHP	RPM	BHP	RPM	BHP	RPM	BHP
4000	996(d)	2.36(d)	1018(d)	2.46(d)	1040(d)	2.57(d)	1061(d)	2.67(d)
4500	1030(d)	2.88(d)	1049(d)	2.97(d)	1069(f)	3.08(f)	1090(f)	3.19(f)
5000	1067(f)	3.48(f)	1087(f)	3.60(f)	1106(f)	3.71(f)	1125(f)	3.83(f)
5500	1109(f)	4.19(f)	1127(f)	4.32(f)	1146(f)	4.44(f)	1164(f)	4.57(f)
6000	1148(f)	4.98(f)	—	—	—	—	—	—

	Digit 12 - Drive Package	
Legend	single speed motor	two speed motor
(a)	A	1
(b)	B	2
(c)	C	3
(d)	D	4
(e)	E	5
(f)	F	6

Figure 24. Fan performance curve (top supply) 12.5 tons GEVE150[14]

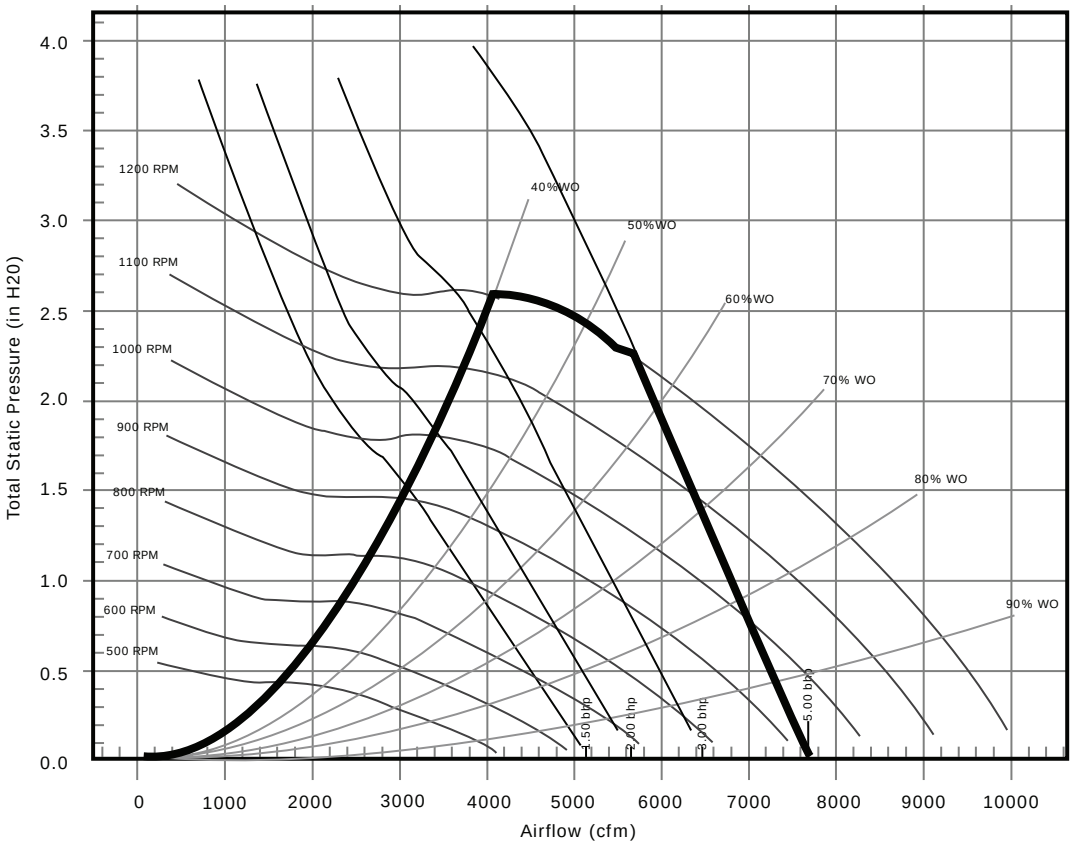

Table 182. Fan performance (top supply) 12.5 tons GEVE150 (includes wet coil, no filter)

Std Airflow CFM	Unit External Static Pressure inches W.G. (Wet Coil, 3% Drive Loss Included & No Return Air Filter)													
	0.1		0.2		0.3		0.4		0.5		0.6		0.7	
	RPM	BHP	RPM	BHP	RPM	BHP	RPM	BHP	RPM	BHP	RPM	BHP	RPM	BHP
4000	—	—	—	—	—	—	626(a)	1.07(a)	660(a)	1.16(a)	692(a)	1.25(a)	724(a)	1.34(a)
4500	—	—	607(a)	1.22(a)	639(a)	1.31(a)	671(a)	1.41(a)	702(a)	1.52(a)	733(a)	1.62(a)	762(a)	1.72(a)
5000	630(a)	1.50(a)	661(a)	1.62(a)	690(a)	1.72(a)	718(a)	1.83(a)	747(a)	1.94(a)	776(a)	2.06(a)	803(b)	2.17(b)
5500	686(a)	1.96(a)	716(a)	2.10(a)	742(b)	2.22(b)	768(b)	2.33(b)	794(b)	2.45(b)	820(b)	2.58(b)	847(b)	2.71(b)
6000	743(b)	2.52(b)	771(b)	2.68(b)	796(b)	2.81(b)	820(b)	2.94(b)	844(b)	3.06(b)	868(b)	3.19(b)	892(d)	3.33(d)
Std Airflow CFM	Unit External Static Pressure inches W.G. (Wet Coil, 3% Drive Loss Included & No Return Air Filter)													
	0.8		0.9		1.0		1.1		1.2		1.3		1.4	
	RPM	BHP	RPM	BHP	RPM	BHP	RPM	BHP	RPM	BHP	RPM	BHP	RPM	BHP
4000	754(a)	1.43(a)	783(a)	1.52(a)	810(a)	1.62(a)	837(a)	1.72(a)	864(a)	1.81(a)	890(a)	1.90(a)	915(c)	1.99(c)
4500	791(a)	1.82(a)	818(a)	1.92(a)	845(a)	2.02(a)	871(b)	2.12(b)	896(b)	2.23(b)	920(b)	2.34(b)	943(c)	2.45(c)
5000	830(b)	2.29(b)	856(b)	2.40(b)	882(b)	2.51(b)	906(b)	2.62(b)	931(b)	2.73(b)	954(c)	2.84(c)	977(c)	2.96(c)
5500	872(b)	2.83(b)	897(b)	2.96(b)	921(b)	3.08(b)	944(d)	3.21(d)	967(d)	3.33(d)	990(d)	3.45(d)	1013(d)	3.57(d)
6000	916(d)	3.47(d)	939(d)	3.61(d)	962(d)	3.75(d)	985(d)	3.88(d)	1007(d)	4.02(d)	1028(d)	4.15(d)	1050(d)	4.29(d)

[14] *Includes wet coil, no filter*

Table 182. Fan performance (top supply) 12.5 tons GEVE150 (includes wet coil, no filter) (continued)

Std Airflow CFM	Unit External Static Pressure inches W.G. (Wet Coil, 3% Drive Loss Included & No Return Air Filter)													
	0.1		0.2		0.3		0.4		0.5		0.6		0.7	
	RPM	BHP	RPM	BHP	RPM	BHP	RPM	BHP	RPM	BHP	RPM	BHP	RPM	BHP

Std Airflow CFM	Unit External Static Pressure inches W.G. (Wet Coil, 3% Drive Loss Included & No Return Air Filter)											
	1.5		1.6		1.7		1.8		1.9		2.0	
	RPM	BHP	RPM	BHP	RPM	BHP	RPM	BHP	RPM	BHP	RPM	BHP
4000	939(c)	2.09(c)	963(c)	2.19(c)	987(c)	2.29(c)	1010(c)	2.39(c)	1034(c)	2.50(c)	1059(c)	2.61(c)
4500	967(c)	2.56(c)	991(c)	2.19(c)	1013(c)	2.76(c)	1035(c)	2.87(c)	1057(c)	2.98(c)	1077(c)	3.09(c)
5000	999(c)	3.08(c)	1021(c)	3.21(c)	1043(d)	3.33(d)	1065(d)	3.45(d)	1085(d)	3.56(d)	1106(d)	3.68(d)
5500	1034(d)	3.69(d)	1056(d)	3.82(d)	1076(d)	3.95(d)	1097(d)	4.09(d)	1117(d)	4.22(d)	1136(d)	4.35(d)
6000	1070(d)	4.42(d)	1091(d)	4.55(d)	1111(d)	4.68(d)	1131(d)	4.81(d)	—	—	—	—

	Digit 12 - Drive Package	
Legend	single speed motor	two speed motor
(a)	A	1
(b)	B	2
(c)	C	3
(d)	D	4

Figure 25. Fan performance curve (front/back supply) 12.5 tons GEVE150[15]

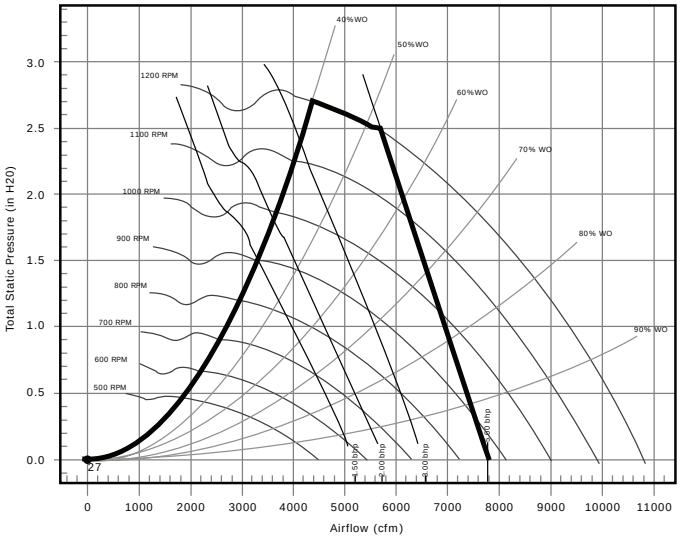

Table 183. Fan performance (front/back supply) 12.5 tons GEVE150 (includes wet coil, no filter)

Std Airflow CFM	Unit External Static Pressure inches W.G. (Wet Coil, 3% Drive Loss Included & No Return Air Filter)													
	0.1		0.2		0.3		0.4		0.5		0.6		0.7	
	RPM	BHP	RPM	BHP	RPM	BHP	RPM	BHP	RPM	BHP	RPM	BHP	RPM	BHP
4000	—	—	—	—	—	—	—	—	626(a)	1.11(a)	658(a)	1.20(a)	689(a)	1.28(a)
4500	—	—	—	—	606(a)	1.28(a)	636(a)	1.37(a)	666(a)	1.46(a)	695(a)	1.55(a)	723(a)	1.64(a)
5000	—	—	626(a)	1.58(a)	654(a)	1.68(a)	681(a)	1.78(a)	708(a)	1.88(a)	735(a)	1.98(a)	761(b)	2.08(b)

[15] *Includes wet coil, no filter*

Table 183. Fan performance (front/back supply) 12.5 tons GEVE150 (includes wet coil, no filter) (continued)

Std Airflow CFM	Unit External Static Pressure inches W.G. (Wet Coil, 3% Drive Loss Included & No Return Air Filter)													
	0.1		0.2		0.3		0.4		0.5		0.6		0.7	
	RPM	BHP	RPM	BHP	RPM	BHP	RPM	BHP	RPM	BHP	RPM	BHP	RPM	BHP
5500	652(a)	1.95(a)	677(b)	2.06(b)	703(b)	2.17(b)	728(b)	2.28(b)	753(b)	2.39(b)	778(b)	2.50(b)	802(b)	2.61(b)
6000	707(b)	2.51(b)	730(b)	2.63(b)	753(b)	2.75(b)	777(b)	2.87(b)	800(b)	2.99(b)	—	—	—	—
Std Airflow CFM	Unit External Static Pressure inches W.G. (Wet Coil, 3% Drive Loss Included & No Return Air Filter)													
	0.8		0.9		1.0		1.1		1.2		1.3		1.4	
	RPM	BHP	RPM	BHP	RPM	BHP	RPM	BHP	RPM	BHP	RPM	BHP	RPM	BHP
4000	719(a)	1.36(a)	749(a)	1.45(a)	778(a)	1.54(a)	805(a)	1.62(a)	832(a)	1.71(a)	858(a)	1.80(a)	884(a)	1.89(a)
4500	751(a)	1.74(a)	779(a)	1.84(a)	806(a)	1.93(a)	833(b)	2.03(b)	858(b)	2.12(b)	884(b)	2.22(b)	908(c)	2.32(c)
5000	787(b)	2.19(b)	812(b)	2.29(b)	838(b)	2.40(b)	863(b)	2.51(b)	888(c)	2.62(c)	911(c)	2.72(c)	935(c)	2.83(c)
5500	826(b)	2.72(b)	850(b)	2.83(b)	873(b)	2.95(b)	897(d)	3.07(d)	919(d)	3.18(d)	942(d)	3.30(d)	965(d)	3.42(d)
6000	—	—	890(d)	3.46(d)	912(d)	3.59(d)	933(d)	3.71(d)	955(d)	3.84(d)	976(d)	3.97(d)	997(d)	4.10(d)
Std Airflow CFM	Unit External Static Pressure inches W.G. (Wet Coil, 3% Drive Loss Included & No Return Air Filter)													
	1.5		1.6		1.7		1.8		1.9		2.0			
	RPM	BHP	RPM	BHP	RPM	BHP	RPM	BHP	RPM	BHP	RPM	BHP		
4000	910(c)	1.98(c)	936(c)	2.08(c)	962(c)	2.18(c)	987(c)	2.29(c)	1011(c)	2.39(c)	1035(c)	2.49(c)		
4500	932(c)	2.42(c)	955(c)	2.51(c)	978(c)	2.61(c)	1002(c)	2.72(c)	1025(c)	2.83(c)	1048(c)	2.94(c)		
5000	958(c)	2.93(c)	980(d)	3.04(d)	1002(d)	3.15(d)	1024(d)	3.25(d)	1046(d)	3.37(d)	1067(d)	3.48(d)		
5500	987(d)	3.54(d)	1009(d)	3.65(d)	1030(d)	3.77(d)	1050(d)	3.88(d)	1071(d)	4.00(d)	1091(d)	4.12(d)		
6000	1017(d)	4.22(d)	1038(d)	4.35(d)	1059(d)	4.48(d)	1078(d)	4.60(d)	1099(d)	4.73(d)	1118(d)	4.86(d)		

	Digit 12 - Drive Package	
Legend	single speed motor	two speed motor
(a)	A	1
(b)	B	2
(c)	C	3
(d)	D	4

Figure 26. Fan performance curve 15 tons GEHE180[16]

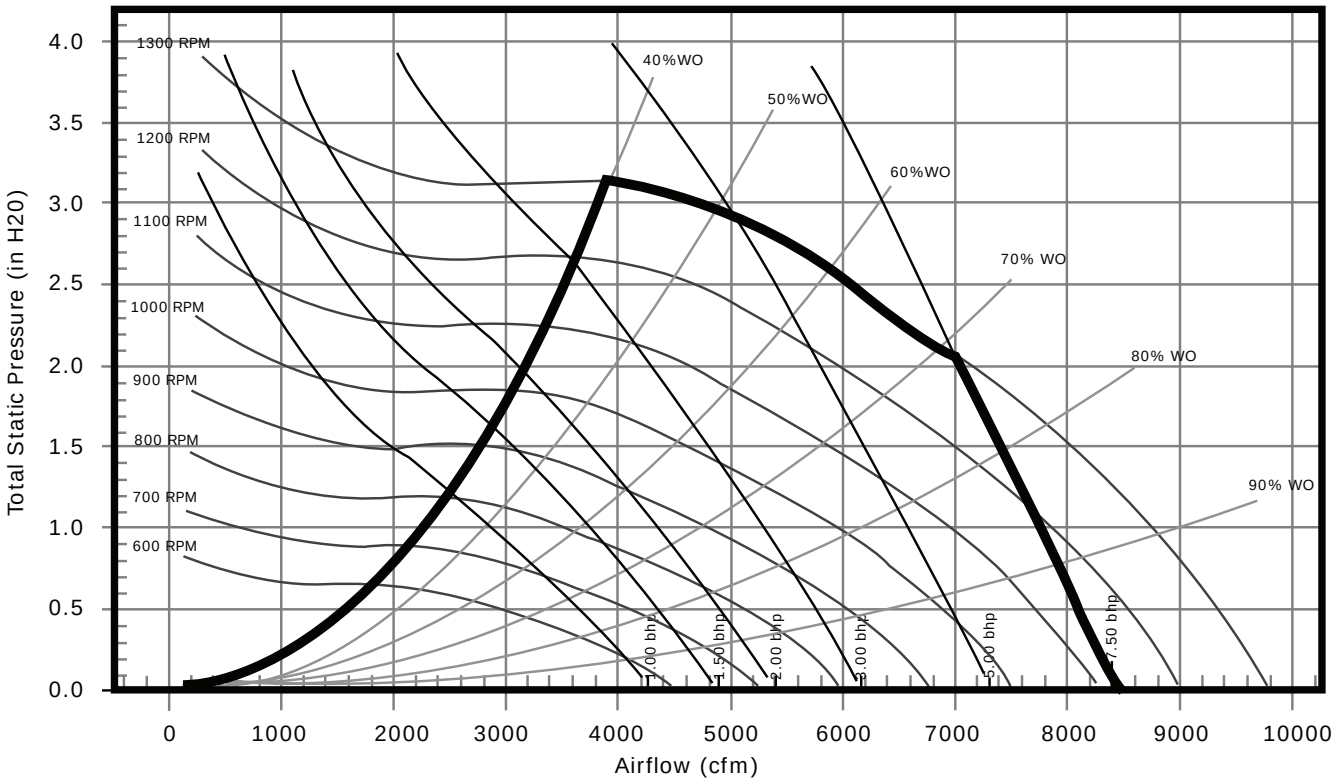

Table 184. Fan performance 15 tons GEHE180 (includes wet coil, no filter)

Std Airflow CFM	Unit External Static Pressure inches W.G. (Wet Coil, No Drive Loss Included & No Return Air Filter)															
	0.1		0.2		0.3		0.4		0.5		0.6		0.7		0.8	
	RPM	BHP	RPM	BHP	RPM	BHP	RPM	BHP	RPM	BHP	RPM	BHP	RPM	BHP	RPM	BHP
4800	660(a)	1.50(a)	685(a)	1.58(a)	711(a)	1.68(a)	738(a)	1.78(a)	765(a)	1.89(a)	791(a)	1.99(a)	817(c)	2.10(c)	844(c)	2.22(c)
5400	737(b)	2.11(b)	758(b)	2.20(b)	781(b)	2.30(b)	805(b)	2.41(b)	828(b)	2.53(b)	853(c)	2.65(c)	876(c)	2.77(c)	899(c)	2.89(c)
6000	815(b)	2.88(b)	833(b)	2.97(b)	853(d)	3.08(d)	874(d)	3.20(d)	895(d)	3.32(d)	917(d)	3.45(d)	939(d)	3.58(d)	960(d)	3.71(d)
6600	892(d)	3.81(d)	909(d)	3.91(d)	927(d)	4.02(d)	945(d)	4.14(d)	965(d)	4.27(d)	984(d)	4.41(d)	1004(d)	4.55(d)	1023(e)	4.69(e)
7200	971(d)	4.92(d)	986(f)	5.03(f)	1002(f)	5.15(f)	1018(f)	5.27(f)	1036(f)	5.41(f)	1053(f)	5.55(f)	1071(f)	5.70(f)	1089(f)	5.86(f)
Std Airflow CFM	Unit External Static Pressure inches W.G. (Wet Coil, No Drive Loss Included & No Return Air Filter)															
	0.9		1.0		1.1		1.2		1.3		1.4		1.5		1.6	
	RPM	BHP	RPM	BHP	RPM	BHP	RPM	BHP	RPM	BHP	RPM	BHP	RPM	BHP	RPM	BHP
4800	870(c)	2.33(c)	896(c)	2.45(c)	921(c)	2.56(c)	946(c)	2.68(c)	969(c)	2.79(c)	990(c)	2.90(c)	1011(c)	3.00(c)	1031(e)	3.12(e)
5400	922(d)	3.01(d)	946(d)	3.14(d)	969(d)	3.26(d)	993(d)	3.40(d)	1016(d)	3.53(d)	1039(e)	3.66(e)	1060(e)	3.79(e)	1081(e)	3.92(e)
6000	981(d)	3.85(d)	1002(d)	3.98(d)	1022(e)	4.11(e)	1044(e)	4.26(e)	1065(e)	4.40(e)	1086(e)	4.54(e)	1108(e)	4.69(e)	1128(e)	4.83(e)
6600	1043(e)	4.84(e)	1062(e)	4.99(e)	1081(f)	5.13(f)	1100(f)	5.28(f)	1119(f)	5.43(f)	1138(f)	5.58(f)	1157(g)	5.74(g)	1177(g)	5.90(g)
7200	1107(f)	6.01(f)	1125(f)	6.17(f)	1143(f)	6.33(f)	1160(g)	6.49(g)	1178(g)	6.65(g)	1195(g)	6.81(g)	1212(g)	6.97(g)	1229(g)	7.13(g)

[16] *Includes wet coil, no filter*

Table 184. Fan performance 15 tons GEHE180 (includes wet coil, no filter) (continued)

Std Airflow CFM	Unit External Static Pressure inches W.G. (Wet Coil, No Drive Loss Included & No Return Air Filter)															
	0.1		0.2		0.3		0.4		0.5		0.6		0.7		0.8	
	RPM	BHP	RPM	BHP	RPM	BHP	RPM	BHP	RPM	BHP	RPM	BHP	RPM	BHP	RPM	BHP

Std Airflow CFM	Unit External Static Pressure inches W.G. (Wet Coil, No Drive Loss Included & No Return Air Filter)							
	1.7		1.8		1.9		2.0	
	RPM	BHP	RPM	BHP	RPM	BHP	RPM	BHP
4800	1051(e)	3.23(e)	1071(e)	3.34(e)	1091(e)	3.45(e)	1111(e)	3.56(e)
5400	1100(e)	4.04(e)	1119(e)	4.16(e)	1138(e)	4.29(e)	1156(e)	4.41(e)
6000	1148(e)	4.98(e)	1168(g)	5.13(g)	1187(g)	5.27(g)	1205(g)	5.41(g)
6600	1196(g)	6.05(g)	1215(g)	6.22(g)	1234(g)	6.37(g)	1253(g)	6.54(g)
7200	1248(g)	7.31(g)	1266(g)	7.48(g)	—	—	—	—

	Digit 12 - Drive Package	
Legend	single speed motor	two speed motor
(a)	A	1
(b)	B	2
(c)	C	3
(d)	D	4
(e)	E	5
(f)	F	6
(g)	G	7

Figure 27. Fan performance curve (top supply) 15 tons GEVE180[17]

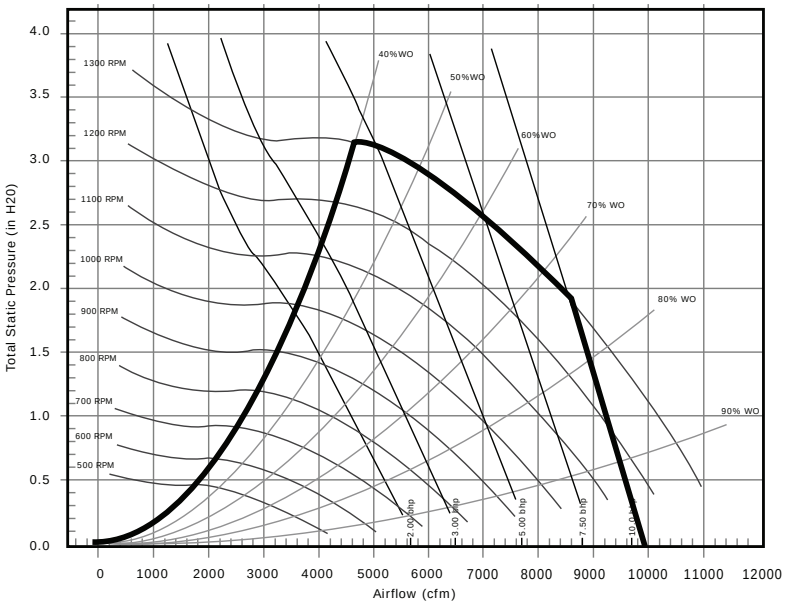

[17] *Includes wet coil, no filter*

Table 185. Fan performance (top supply) 15 tons GEVE180 (includes wet coil, no filter)

Std Airflow CFM	Unit External Static Pressure inches W.G. (Wet Coil, 3% Drive Loss Included & No Return Air Filter)															
	0.1		0.2		0.3		0.4		0.5		0.6		0.7		0.8	
	RPM	BHP	RPM	BHP	RPM	BHP	RPM	BHP	RPM	BHP	RPM	BHP	RPM	BHP	RPM	BHP
4800	—	—	—	—	—	—	669(a)	1.55(a)	698(a)	1.66(a)	727(a)	1.77(a)	754(a)	1.87(a)	781(a)	1.98(a)
5400	—	—	670(a)	1.84(a)	698(a)	1.96(a)	724(a)	2.08(a)	750(a)	2.20(a)	777(a)	2.32(a)	802(a)	2.44(a)	827(a)	2.56(a)
6000	710(a)	2.37(a)	731(a)	2.47(a)	758(a)	2.60(a)	782(a)	2.73(a)	806(a)	2.86(a)	830(a)	3.00(a)	853(b)	3.13(b)	877(b)	3.26(b)
6600	—	—	794(b)	3.23(b)	819(b)	3.37(b)	843(b)	3.52(b)	864(b)	3.66(b)	886(b)	3.81(b)	907(b)	3.95(b)	928(b)	4.09(b)
7200	848(b)	4.06(b)	860(b)	4.14(b)	880(b)	4.28(b)	904(b)	4.45(b)	924(b)	4.60(b)	943(b)	4.76(b)	963(b)	4.92(b)	—	—

Std Airflow CFM	Unit External Static Pressure inches W.G. (Wet Coil, 3% Drive Loss Included & No Return Air Filter)															
	0.9		1.0		1.1		1.2		1.3		1.4		1.5		1.6	
	RPM	BHP	RPM	BHP	RPM	BHP	RPM	BHP	RPM	BHP	RPM	BHP	RPM	BHP	RPM	BHP
4800	808(a)	2.08(a)	834(a)	2.19(a)	860(a)	2.30(a)	885(a)	2.41(a)	909(c)	2.52(c)	933(c)	2.63(c)	956(c)	2.73(c)	979(c)	2.84(c)
5400	852(a)	2.68(a)	876(a)	2.80(a)	900(c)	2.92(c)	923(c)	3.04(c)	946(b)	3.17(b)	969(b)	3.29(b)	991(b)	3.41(b)	1013(b)	3.53(b)
6000	899(b)	3.40(b)	922(b)	3.53(b)	944(b)	3.66(b)	966(b)	3.80(b)	987(b)	3.93(b)	1008(b)	4.06(b)	1030(d)	4.20(d)	1050(d)	4.34(d)
6600	950(b)	4.24(b)	971(b)	4.39(b)	992(b)	4.54(b)	1012(b)	4.69(b)	1032(d)	4.83(d)	1053(d)	4.98(d)	1072(e)	5.12(e)	1091(e)	5.27(e)
7200	1003(e)	5.23(e)	1023(e)	5.39(e)	1042(e)	5.56(e)	1061(e)	5.72(e)	1080(e)	5.88(e)	1099(e)	6.04(e)	1118(e)	6.20(e)	1136(e)	6.36(e)

Std Airflow CFM	Unit External Static Pressure inches W.G. (Wet Coil, 3% Drive Loss Included & No Return Air Filter)							
	1.7		1.8		1.9		2.0	
	RPM	BHP	RPM	BHP	RPM	BHP	RPM	BHP
4800	1001(c)	2.96(c)	1023(d)	3.07(d)	1045(d)	3.19(d)	1065(d)	3.30(d)
5400	1034(d)	3.65(d)	1056(d)	3.78(d)	1075(d)	3.89(d)	1096(d)	4.02(d)
6000	1071(d)	4.47(d)	1091(d)	4.61(d)	1111(d)	4.75(d)	1131(d)	4.88(d)
6600	1111(e)	5.42(e)	1130(e)	5.57(e)	1149(e)	5.72(e)	1167(e)	5.87(e)
7200	1154(e)	6.52(e)	1172(e)	6.67(e)	1190(e)	6.83(e)	—	—

	Digit 12 - Drive Package	
Legend	single speed motor	two speed motor
(a)	A	1
(b)	B	2
(c)	C	3
(d)	D	4
(e)	E	5

Figure 28. Fan performance curve (front/back supply) 15 tons GEVE180[18]

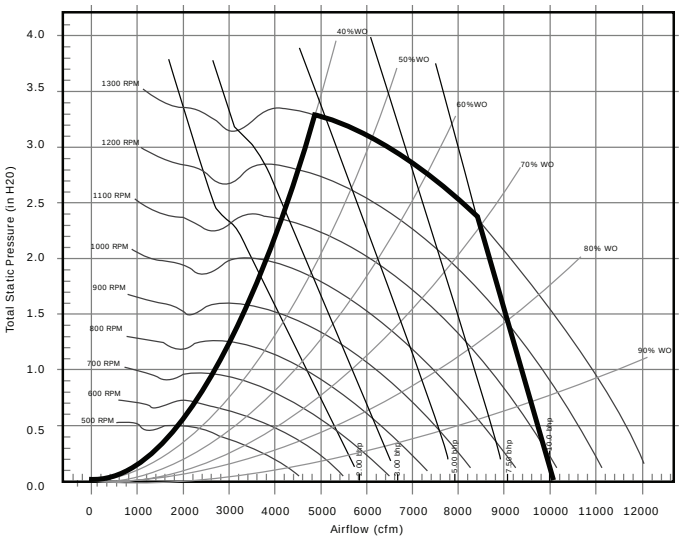

Table 186. Fan performance (front/back supply) 15 tons GEVE180 (includes wet coil, no filter)

Std Airflow CFM	Unit External Static Pressure inches W.G. (Wet Coil, No Drive Loss Included & No Return Air Filter)															
	0.1		0.2		0.3		0.4		0.5		0.6		0.7		0.8	
	RPM	BHP	RPM	BHP	RPM	BHP	RPM	BHP	RPM	BHP	RPM	BHP	RPM	BHP	RPM	BHP
4800	—	—	—	—	—	—	—	—	668(a)	1.60(a)	696(a)	1.70(a)	724(a)	1.79(a)	750(a)	1.89(a)
5400	—	—	—	—	665(a)	1.92(a)	692(a)	2.03(a)	717(a)	2.13(a)	743(a)	2.24(a)	768(a)	2.35(a)	793(a)	2.46(a)
6000	670(a)	2.28(a)	696(a)	2.41(a)	722(a)	2.54(a)	746(a)	2.66(a)	770(a)	2.78(a)	793(a)	2.91(a)	816(a)	3.02(a)	839(b)	3.14(b)
6600	732(a)	3.01(a)	755(b)	3.15(b)	780(b)	3.30(b)	802(b)	3.43(b)	824(b)	3.56(b)	846(b)	3.70(b)	867(b)	3.83(b)	888(b)	3.96(b)
7200	795(b)	3.89(b)	815(b)	4.03(b)	838(b)	4.19(b)	860(b)	4.35(b)	880(b)	4.49(b)	900(b)	4.63(b)	920(b)	4.78(b)	940(b)	4.93(b)

Std Airflow CFM	Unit External Static Pressure inches W.G. (Wet Coil, No Drive Loss Included & No Return Air Filter)															
	0.9		1.0		1.1		1.2		1.3		1.4		1.5		1.6	
	RPM	BHP	RPM	BHP	RPM	BHP	RPM	BHP	RPM	BHP	RPM	BHP	RPM	BHP	RPM	BHP
4800	776(a)	1.98(a)	802(a)	2.08(a)	827(a)	2.18(a)	853(a)	2.28(a)	878(a)	2.38(a)	902(c)	2.48(c)	925(c)	2.59(c)	949(c)	2.69(c)
5400	818(a)	2.57(a)	841(a)	2.67(a)	864(a)	2.78(a)	887(a)	2.88(a)	910(c)	3.00(c)	934(c)	3.12(c)	955(c)	3.22(c)	978(d)	3.34(d)
6000	861(b)	3.27(b)	884(b)	3.39(b)	906(b)	3.51(b)	927(b)	3.63(b)	947(b)	3.74(b)	969(d)	3.86(d)	990(d)	3.98(d)	1011(d)	4.11(d)
6600	908(b)	4.09(b)	929(b)	4.23(b)	950(b)	4.36(b)	970(d)	4.50(d)	990(d)	4.63(d)	1010(d)	4.76(d)	1029(d)	4.89(d)	1048(d)	5.02(d)
7200	—	—	—	—	—	—	1016(e)	5.50(e)	1035(e)	5.65(e)	1053(e)	5.80(e)	1071(e)	5.94(e)	1090(e)	6.09(e)

Std Airflow CFM	Unit External Static Pressure inches W.G. (Wet Coil, No Drive Loss Included & No Return Air Filter)							
	1.7		1.8		1.9		2.0	
	RPM	BHP	RPM	BHP	RPM	BHP	RPM	BHP
4800	972(c)	2.79(c)	995(c)	2.90(c)	1018(c)	3.01(c)	1040(d)	3.11(d)
5400	999(d)	3.45(d)	1021(d)	3.57(d)	1041(d)	3.68(d)	1063(d)	3.80(d)
6000	1031(d)	4.23(d)	1051(d)	4.35(d)	1071(d)	4.48(d)	1090(d)	4.61(d)
6600	1066(e)	5.14(e)	1085(e)	5.28(e)	1105(e)	5.42(e)	1124(e)	5.56(e)
7200	1107(e)	6.22(e)	1125(e)	6.36(e)	1142(e)	6.50(e)	1160(e)	6.65(e)

[18] *Includes wet coil, no filter*

Table 186. Fan performance (front/back supply) 15 tons GEVE180 (includes wet coil, no filter) (continued)

Std Airflow CFM	Unit External Static Pressure inches W.G. (Wet Coil, No Drive Loss Included & No Return Air Filter)															
	0.1		0.2		0.3		0.4		0.5		0.6		0.7		0.8	
	RPM	BHP	RPM	BHP	RPM	BHP	RPM	BHP	RPM	BHP	RPM	BHP	RPM	BHP	RPM	BHP

	Digit 12 - Drive Package	
Legend	single speed motor	two speed motor
(a)	A	1
(b)	B	2
(c)	C	3
(d)	D	4
(e)	E	5

Figure 29. Fan performance curve (top supply) 20 tons GEVE240[19]

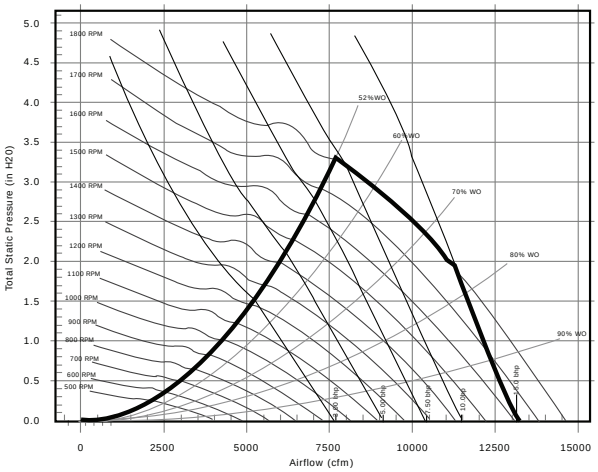

Table 187. Fan performance (top supply) 20 tons GEVE240 (includes wet coil, no filter)

Std Airflow CFM	Unit External Static Pressure inches W.G. (Wet Coil, 3% Drive Loss Included & No Return Air Filter)													
	0.1		0.2		0.3		0.4		0.5		0.6		0.7	
	RPM	BHP	RPM	BHP	RPM	BHP	RPM	BHP	RPM	BHP	RPM	BHP	RPM	BHP
6400	—	—	893(a)	2.17(a)	928(a)	2.31(a)	962(a)	2.46(a)	995(a)	2.61(a)	1028(a)	2.76(a)	1059(a)	2.91(a)
7200	956(a)	2.83(a)	988(a)	3.00(a)	1019(a)	3.16(a)	1049(a)	3.32(a)	1080(a)	3.49(a)	1110(b)	3.66(b)	1139(b)	3.83(b)
8000	1055(a)	3.84(a)	1085(a)	4.03(a)	1113(b)	4.21(b)	1141(b)	4.39(b)	1168(b)	4.57(b)	1195(b)	4.76(b)	1222(b)	4.95(b)
8800	—	—	—	—	—	—	1234(c)	5.67(c)	1259(c)	5.87(c)	1283(c)	6.07(c)	1308(c)	6.27(c)
9600	1255(c)	6.54(c)	1280(c)	6.76(c)	1305(c)	6.98(c)	1328(c)	7.20(c)	1352(c)	7.42(c)	1374(d)	7.63(d)	1397(d)	7.85(d)
Std Airflow CFM	Unit External Static Pressure inches W.G. (Wet Coil, 3% Drive Loss Included & No Return Air Filter)													
	0.8		0.9		1.0		1.1		1.2		1.3		1.4	
	RPM	BHP	RPM	BHP	RPM	BHP	RPM	BHP	RPM	BHP	RPM	BHP	RPM	BHP
6400	1091(b)	3.07(b)	1120(b)	3.22(b)	1149(b)	3.37(b)	1179(b)	3.53(b)	1207(b)	3.69(b)	1236(b)	3.85(b)	1263(b)	4.01(b)
7200	1168(b)	4.00(b)	1196(b)	4.17(b)	1224(b)	4.34(b)	1250(b)	4.52(b)	1277(b)	4.69(b)	1302(b)	4.86(b)	1328(b)	5.03(b)
8000	1249(c)	5.13(c)	1275(c)	5.32(c)	1301(c)	5.52(c)	1326(c)	5.70(c)	1352(c)	5.90(c)	1376(c)	6.08(c)	1399(c)	6.28(c)

[19] *Includes wet coil, no filter*

Table 187. Fan performance (top supply) 20 tons GEVE240 (includes wet coil, no filter) (continued)

Std Airflow CFM	Unit External Static Pressure inches W.G. (Wet Coil, 3% Drive Loss Included & No Return Air Filter)													
	0.1		0.2		0.3		0.4		0.5		0.6		0.7	
	RPM	BHP	RPM	BHP	RPM	BHP	RPM	BHP	RPM	BHP	RPM	BHP	RPM	BHP
8800	1333(c)	6.48(c)	1357(c)	6.69(c)	1382(c)	6.90(c)	1405(c)	7.11(c)	1429(c)	7.32(c)	1452(c)	7.53(c)	1474(f)	7.73(f)
9600	1420(d)	8.07(d)	1443(d)	8.30(d)	1465(d)	8.53(d)	1487(f)	8.75(f)	1509(f)	8.98(f)	1531(f)	9.21(f)	1553(f)	9.44(f)
Std Airflow CFM	Unit External Static Pressure inches W.G. (Wet Coil, 3% Drive Loss Included & No Return Air Filter)													
	1.5		1.6		1.7		1.8		1.9		2.0		2.1	
	RPM	BHP	RPM	BHP	RPM	BHP	RPM	BHP	RPM	BHP	RPM	BHP	RPM	BHP
6400	1289(b)	4.17(b)	1317(b)	4.35(b)	1343(b)	4.51(b)	1369(c)	4.68(c)	1394(c)	4.85(c)	1420(c)	5.04(c)	1444(c)	5.21(c)
7200	1353(c)	5.22(c)	1378(c)	5.39(c)	1403(c)	5.57(c)	1428(c)	5.77(c)	1451(c)	5.95(c)	1475(c)	6.13(c)	1498(e)	6.32(e)
8000	1423(c)	6.47(c)	1447(c)	6.66(c)	1469(c)	6.85(c)	1492(f)	7.05(f)	1515(f)	7.25(f)	1537(f)	7.45(f)	1559(f)	7.65(f)
8800	1496(f)	7.94(f)	1519(f)	8.16(f)	1540(f)	8.36(f)	1562(f)	8.58(f)	1583(f)	8.78(f)	1605(f)	9.01(f)	1625(f)	9.22(f)
9600	1574(f)	9.67(f)	1595(f)	9.90(f)	1616(g)	10.12(g)	1637(g)	10.36(g)	1656(g)	10.58(g)	1676(g)	10.80(g)	1696(g)	11.04(g)
Std Airflow CFM	Unit External Static Pressure inches W.G. (Wet Coil, 3% Drive Loss Included & No Return Air Filter)													
	2.2		2.3		2.4		2.4		2.6		2.7		2.8	
	RPM	BHP	RPM	BHP	RPM	BHP	RPM	BHP	RPM	BHP	RPM	BHP	RPM	BHP
6400	1470(c)	5.40(c)	1496(e)	5.59(e)	1523(e)	5.80(e)	—	—	—	—	—	—	—	—
7200	1523(e)	6.52(e)	1545(e)	6.71(e)	1568(e)	6.91(e)	1589(e)	7.10(e)	1612(e)	7.31(e)	1635(e)	7.51(e)	1656(f)	7.71(f)
8000	1581(f)	7.85(f)	1603(f)	8.06(f)	1624(f)	8.26(f)	1647(f)	8.49(f)	1668(f)	8.70(f)	1688(f)	8.91(f)	1708(f)	9.12(f)
8800	1646(f)	9.43(f)	1666(f)	9.65(f)	1687(f)	9.87(f)	1707(g)	10.09(g)	1727(g)	10.32(g)	1747(g)	10.54(g)	1767(g)	10.78(g)
9600	1715(g)	11.26(g)	1735(g)	11.50(g)	1754(g)	11.74(g)	1773(g)	11.96(g)	1793(g)	12.22(g)	—	—	—	—
Std Airflow CFM	Unit External Static Pressure inches W.G. (Wet Coil, 3% Drive Loss Included & No Return Air Filter)													
	2.9		3.0											
	RPM	BHP	RPM	BHP										
6400	—	—	—	—										
7200	1680(f)	7.94(f)	1704(f)	8.17(f)										
8000	1728(f)	9.33(f)	1748(f)	9.54(f)										
8800	1786(g)	11.00(g)	—	—										
9600	—	—	—	—										

	Digit 12 - Drive Package	
Legend	single speed motor	two speed motor
(a)	A	1
(b)	B	2
(c)	C	3
(d)	D	4
(e)	E	5
(f)	F	6
(g)	G	7

Figure 30. Fan performance curve (front/back supply) 20 tons GEVE240[20]

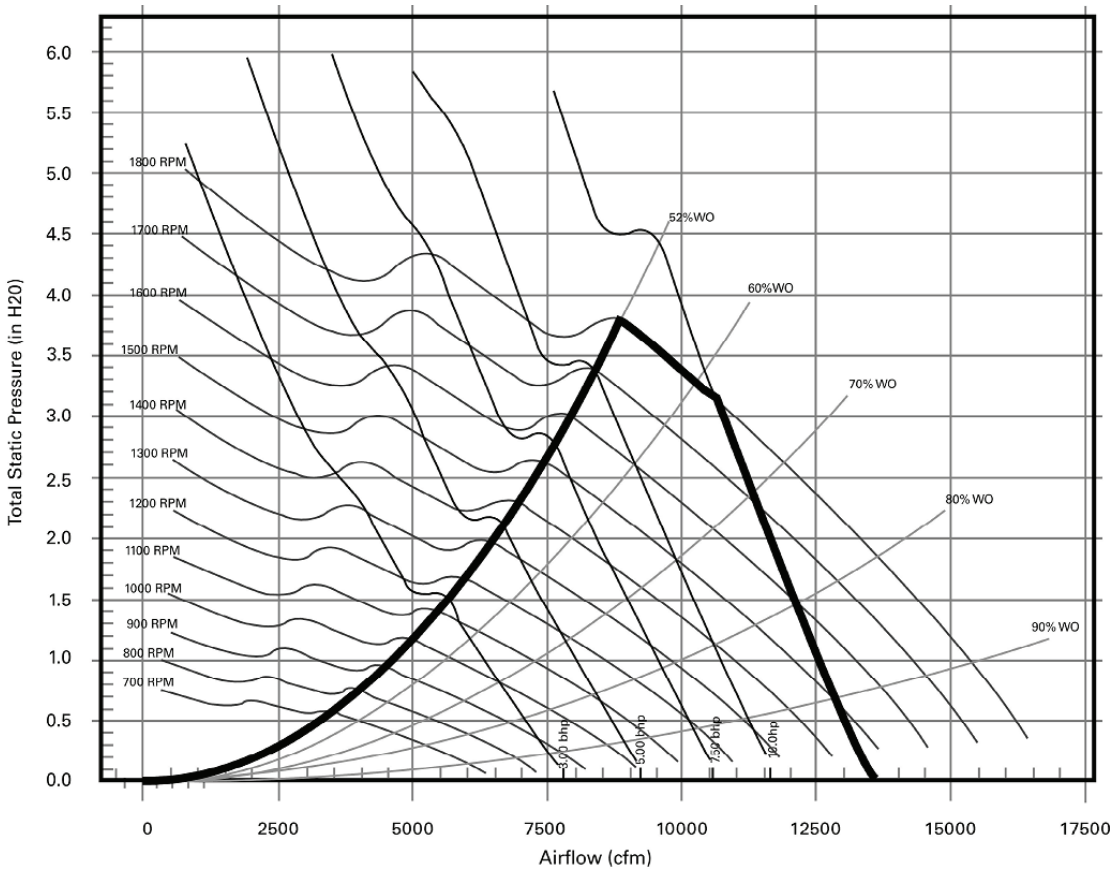

Table 188. Fan performance (front/back supply) 20 tons GEVE240 (includes wet coil, no filter)

Std Airflow CFM	Unit External Static Pressure inches W.G. (Wet Coil, 3% Drive Loss Included & No Return Air Filter)													
	0.1		0.2		0.3		0.4		0.5		0.6		0.7	
	RPM	BHP	RPM	BHP	RPM	BHP	RPM	BHP	RPM	BHP	RPM	BHP	RPM	BHP
6400	—	—	—	—	—	—	—	—	899(a)	2.43(a)	931(a)	2.57(a)	962(a)	2.70(a)
7200	—	—	—	—	910(a)	2.94(a)	941(a)	3.10(a)	972(a)	3.25(a)	1001(a)	3.41(a)	1030(a)	3.56(a)
8000	933(a)	3.58(a)	962(a)	3.75(a)	990(a)	3.91(a)	1019(a)	4.09(a)	1048(a)	4.26(a)	1075(a)	4.43(a)	1102(b)	4.60(b)
8800	1021(a)	4.73(a)	1047(a)	4.91(a)	1073(a)	5.09(a)	1100(c)	5.28(c)	1126(c)	5.48(c)	1151(c)	5.67(c)	1176(c)	5.86(c)
9600	1109(c)	6.10(c)	1133(c)	6.30(c)	1157(c)	6.50(c)	1181(c)	6.70(c)	1205(c)	6.91(c)	1229(c)	7.12(c)	1253(c)	7.33(c)
Std Airflow CFM	Unit External Static Pressure inches W.G. (Wet Coil, 3% Drive Loss Included & No Return Air Filter)													
	0.8		0.9		1.0		1.1		1.2		1.3		1.4	
	RPM	BHP	RPM	BHP	RPM	BHP	RPM	BHP	RPM	BHP	RPM	BHP	RPM	BHP
6400	993(a)	2.85(a)	1023(a)	2.99(a)	1052(a)	3.13(a)	1080(a)	3.27(a)	1107(b)	3.41(b)	1134(b)	3.55(b)	1160(b)	3.69(b)
7200	1059(a)	3.72(a)	1086(a)	3.87(a)	1114(b)	4.03(b)	1140(b)	4.19(b)	1166(b)	4.35(b)	1192(b)	4.51(b)	1217(b)	4.66(b)
8000	1128(b)	4.77(b)	1154(b)	4.95(b)	1179(c)	5.12(c)	1204(c)	5.29(c)	1230(c)	5.47(c)	1253(c)	5.64(c)	1277(d)	5.82(d)
8800	1201(c)	6.04(c)	1225(c)	6.23(c)	1249(c)	6.42(c)	1272(d)	6.61(d)	1295(d)	6.79(d)	1317(d)	6.98(d)	1340(d)	7.18(d)
9600	1276(e)	7.54(e)	1298(e)	7.74(e)	1320(e)	7.94(e)	1342(e)	8.14(e)	1364(e)	8.35(e)	1385(e)	8.55(e)	1406(e)	8.76(e)

[20] *Includes wet coil, no filter*

Table 188. Fan performance (front/back supply) 20 tons GEVE240 (includes wet coil, no filter) (continued)

Std Airflow CFM	Unit External Static Pressure inches W.G. (Wet Coil, 3% Drive Loss Included & No Return Air Filter)													
	0.1		0.2		0.3		0.4		0.5		0.6		0.7	
	RPM	BHP	RPM	BHP	RPM	BHP	RPM	BHP	RPM	BHP	RPM	BHP	RPM	BHP
Std Airflow CFM	Unit External Static Pressure inches W.G. (Wet Coil, 3% Drive Loss Included & No Return Air Filter)													
	1.5		1.6		1.7		1.8		1.9		2.0		2.1	
	RPM	BHP	RPM	BHP	RPM	BHP	RPM	BHP	RPM	BHP	RPM	BHP	RPM	BHP
6400	1186(b)	3.83(b)	1211(b)	3.97(b)	1235(b)	4.10(b)	1258(b)	4.24(b)	1282(b)	4.38(b)	1307(b)	4.54(b)	—	—
7200	1241(b)	4.82(b)	1265(b)	4.97(b)	1288(d)	5.13(d)	1313(d)	5.30(d)	1335(d)	5.45(d)	1357(d)	5.62(d)	1378(d)	5.76(d)
8000	1300(d)	6.00(d)	1323(d)	6.17(d)	1346(d)	6.35(d)	1368(d)	6.52(d)	1390(d)	6.70(d)	1412(d)	6.88(d)	1432(d)	7.05(d)
8800	1362(d)	7.37(d)	1384(e)	7.56(e)	1406(e)	7.76(e)	1426(e)	7.95(e)	1449(e)	8.15(e)	1469(e)	8.34(e)	1489(g)	8.53(g)
9600	1428(e)	8.97(e)	1448(e)	9.18(e)	1470(e)	9.40(e)	1489(g)	9.60(g)	1510(g)	9.82(g)	1529(g)	10.03(g)	—	—
Std Airflow CFM	Unit External Static Pressure inches W.G. (Wet Coil, 3% Drive Loss Included & No Return Air Filter)													
	2.2		2.3		2.4		2.4		2.6		2.7		2.8	
	RPM	BHP	RPM	BHP	RPM	BHP	RPM	BHP	RPM	BHP	RPM	BHP	RPM	BHP
6400	—	—	—	—	—	—	—	—	—	—	—	—	—	—
7200	1399(d)	5.91(d)	1420(d)	6.07(d)	1442(d)	6.24(d)	—	—	—	—	—	—	—	—
8000	1454(d)	7.23(d)	1475(d)	7.41(d)	1494(g)	7.58(g)	1513(g)	7.75(g)	1533(g)	7.92(g)	1551(g)	8.08(g)	1570(g)	8.25(g)
8800	1509(g)	8.72(g)	1529(g)	8.92(g)	1548(g)	9.11(g)	1567(g)	9.30(g)	1587(g)	9.50(g)	1605(g)	9.69(g)	1625(g)	9.89(g)
9600	—	—	—	—	—	—	—	—	—	—	—	—	—	—
Std Airflow CFM	Unit External Static Pressure inches W.G. (Wet Coil, 3% Drive Loss Included & No Return Air Filter)													
	2.9		3.0											
	RPM	BHP	RPM	BHP										
6400	—	—	—	—										
7200	—	—	—	—										
8000	1589(g)	8.43(g)	1608(g)	8.61(g)										
8800	—	—	—	—										
9600	—	—	—	—										

	Digit 12 - Drive Package	
Legend	single speed motor	two speed motor
(a)	A	1
(b)	B	2
(c)	C	3
(d)	D	4
(e)	E	5
(g)	G	7

Figure 31. Fan performance curve (with 11x15 blower wheel) 25 tons GEVE300[21]

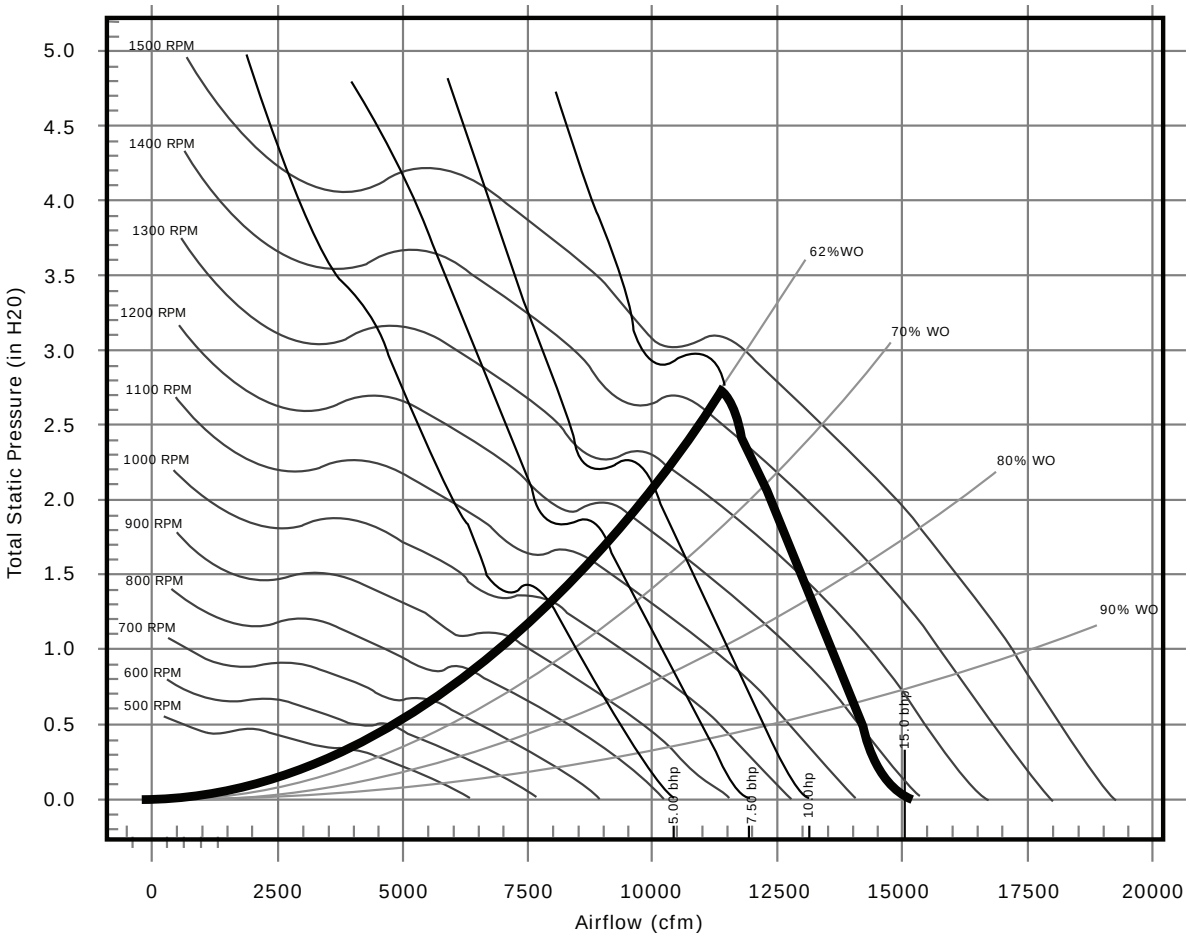

Table 189. Fan performance (top supply with 11x15 blower wheel) 25 tons GEVE300 (includes wet coil, no filter)

Std Airflow CFM	Unit External Static Pressure inches W.G. (Wet Coil, 3% Drive Loss Included & No Return Air Filter)													
	0.1		0.2		0.3		0.4		0.5		0.6		0.7	
	RPM	BHP	RPM	BHP	RPM	BHP	RPM	BHP	RPM	BHP	RPM	BHP	RPM	BHP
8000	—	—	—	—	—	—	760(a)	3.23(a)	787(a)	3.42(a)	814(a)	3.60(a)	839(a)	3.79(a)
9000	—	—	781(a)	3.98(a)	805(a)	4.17(a)	829(a)	4.36(a)	853(a)	4.57(a)	878(a)	4.79(a)	901(a)	5.00(a)
10000	—	—	858(b)	5.36(b)	879(b)	5.57(b)	901(b)	5.78(b)	923(b)	6.00(b)	945(b)	6.23(b)	966(b)	6.48(b)
11000	917(b)	6.81(b)	936(b)	7.04(b)	955(b)	7.26(b)	975(b)	7.50(b)	994(d)	7.73(d)	1014(d)	7.98(d)	1034(d)	8.23(d)
12000	997(d)	8.79(d)	1015(d)	9.05(d)	1032(d)	9.29(d)	1050(d)	9.54(d)	1068(d)	9.79(d)	1086(f)	10.05(f)	1104(f)	10.31(f)
Std Airflow CFM	Unit External Static Pressure inches W.G. (Wet Coil, 3% Drive Loss Included & No Return Air Filter)													
	0.8		0.9		1.0		1.1		1.2		1.3		1.4	
	RPM	BHP	RPM	BHP	RPM	BHP	RPM	BHP	RPM	BHP	RPM	BHP	RPM	BHP
8000	866(a)	3.99(a)	891(a)	4.19(a)	916(a)	4.38(a)	939(a)	4.57(a)	963(a)	4.76(a)	987(b)	4.97(b)	1011(b)	5.19(b)
9000	925(b)	5.21(b)	948(b)	5.43(b)	971(b)	5.65(b)	993(b)	5.87(b)	1016(b)	6.10(b)	1037(b)	6.31(b)	1058(b)	6.52(b)
10000	988(b)	6.72(b)	1009(b)	6.95(b)	1030(b)	7.18(b)	1051(b)	7.41(b)	1072(d)	7.66(d)	1092(d)	7.91(d)	1112(d)	8.16(d)
11000	1054(d)	8.50(d)	1074(d)	8.76(d)	1093(d)	9.02(d)	1112(d)	9.27(d)	1131(d)	9.53(d)	1150(d)	9.78(d)	1169(f)	10.06(f)

[21] *Includes wet coil, no filter*

Table 189. Fan performance (top supply with 11x15 blower wheel) 25 tons GEVE300 (includes wet coil, no filter) (continued)

Std Airflow CFM	Unit External Static Pressure inches W.G. (Wet Coil, 3% Drive Loss Included & No Return Air Filter)													
	0.1		0.2		0.3		0.4		0.5		0.6		0.7	
	RPM	BHP	RPM	BHP	RPM	BHP	RPM	BHP	RPM	BHP	RPM	BHP	RPM	BHP
12000	1122(f)	10.59(f)	1141(f)	10.88(f)	1158(f)	11.17(f)	1177(f)	11.47(f)	1194(f)	11.74(f)	1212(f)	12.02(f)	1229(f)	12.29(f)

Std Airflow CFM	Unit External Static Pressure inches W.G. (Wet Coil, 3% Drive Loss Included & No Return Air Filter)													
	1.5		1.6		1.7		1.8		1.9		2.0		2.1	
	RPM	BHP	RPM	BHP	RPM	BHP	RPM	BHP	RPM	BHP	RPM	BHP	RPM	BHP
8000	1037(b)	5.43(b)	—	—	—	—	—	—	—	—	—	—	—	—
9000	1080(c)	6.74(c)	1101(c)	6.97(c)	1122(c)	7.21(c)	1144(c)	7.46(c)	—	—	—	—	—	—
10000	1132(d)	8.41(d)	1151(d)	8.65(d)	1170(e)	8.88(e)	1190(e)	9.13(e)	1209(e)	9.37(e)	1227(e)	9.60(e)	1247(e)	9.88(e)
11000	1187(f)	10.32(f)	1206(f)	10.60(f)	1224(f)	10.88(f)	1243(f)	11.16(f)	1261(f)	11.42(f)	1278(f)	11.68(f)	1295(f)	11.94(f)
12000	1247(f)	12.57(f)	1264(f)	12.86(f)	1281(f)	13.15(f)	1298(f)	13.46(f)	1315(f)	13.76(f)	1331(f)	14.04(f)	1349(f)	14.37(f)

Std Airflow CFM	Unit External Static Pressure inches W.G. (Wet Coil, 3% Drive Loss Included & No Return Air Filter)			
	2.2		2.3	
	RPM	BHP	RPM	BHP
8000	—	—	—	—
9000	—	—	—	—
10000	1266(f)	10.16(f)	1286(f)	10.45(f)
11000	1313(f)	12.21(f)	1330(f)	12.47(f)
12000	1365(f)	14.65(f)	1381(f)	14.93(f)

	Digit 12 - Drive Package	
Legend	single speed motor	two speed motor
(a)	A	1
(b)	B	2
(c)	C	3
(d)	D	4
(e)	E	5
(f)	F	6

Figure 32. Fan performance curve (top supply with 12x12 blower wheel) 25 tons GEVE300[22]

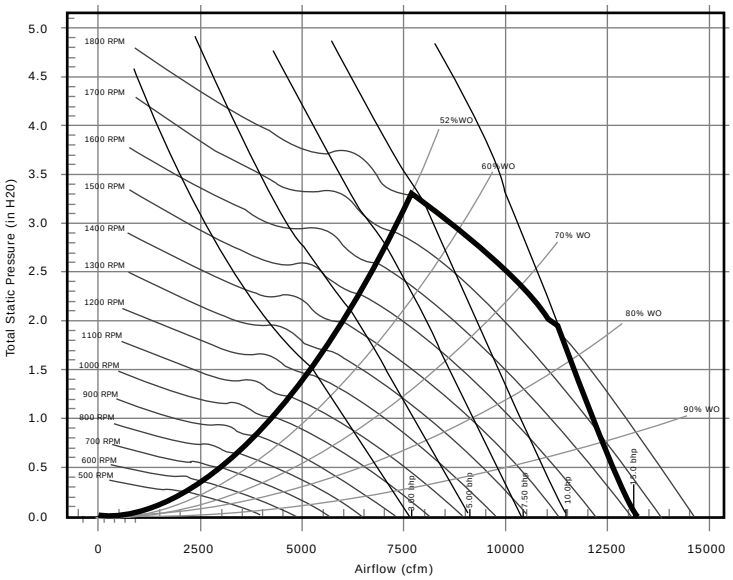

Table 190. Fan performance (top supply with 12x12 blower wheel) 25 tons GEVE300 (includes wet coil, no filter)

Std Airflow CFM	Unit External Static Pressure inches W.G. (Wet Coil, 3% Drive Loss Included & No Return Air Filter)															
	1.6		1.7		1.8		1.9		2.0		2.1		2.2		2.3	
	RPM	BHP	RPM	BHP	RPM	BHP	RPM	BHP	RPM	BHP	RPM	BHP	RPM	BHP	RPM	BHP
8000	1434(g)	6.56(g)	1458(g)	6.76(g)	1481(g)	6.96(g)	1503(g)	7.14(g)	1525(g)	7.34(g)	1548(g)	7.55(g)	1569(h)	7.74(h)	1592(h)	7.96(h)
9000	—	—	—	—	—	—	1588(h)	9.07(h)	1609(h)	9.29(h)	1629(h)	9.50(h)	1650(h)	9.73(h)	1670(h)	9.94(h)
10000	—	—	—	—	—	—	—	—	—	—	—	—	—	—	—	—
11000	—	—	—	—	—	—	—	—	—	—	—	—	—	—	—	—
12000	—	—	—	—	—	—	—	—	—	—	—	—	—	—	—	—

Std Airflow CFM	Unit External Static Pressure inches W.G. (Wet Coil, 3% Drive Loss Included & No Return Air Filter)													
	2.4		2.5		2.6		2.7		2.8		2.9		3.0	
	RPM	BHP	RPM	BHP	RPM	BHP	RPM	BHP	RPM	BHP	RPM	BHP	RPM	BHP
8000	1613(h)	8.16(h)	1635(h)	8.37(h)	1657(h)	8.60(h)	1677(h)	8.80(h)	1698(h)	9.01(h)	1718(h)	9.22(h)	1738(h)	9.43(h)
9000	1691(h)	10.17(h)	1710(h)	10.39(h)	1731(h)	10.63(h)	1749(h)	10.84(h)	1769(j)	11.07(j)	1790(j)	11.32(j)	—	—
10000	1775(j)	12.58(j)	—	—	—	—	—	—	—	—	—	—	—	—
11000	—	—	—	—	—	—	—	—	—	—	—	—	—	—
12000	—	—	—	—	—	—	—	—	—	—	—	—	—	—

	Digit 12 - Drive Package	
Legend	single speed motor	two speed motor
(g)	G	7
(h)	H	8
(j)	J	9

[22] *Includes wet coil, no filter*

Figure 33. Fan performance curve (front/back supply with 11x15 blower wheel) 25 tons GEVE300[23]

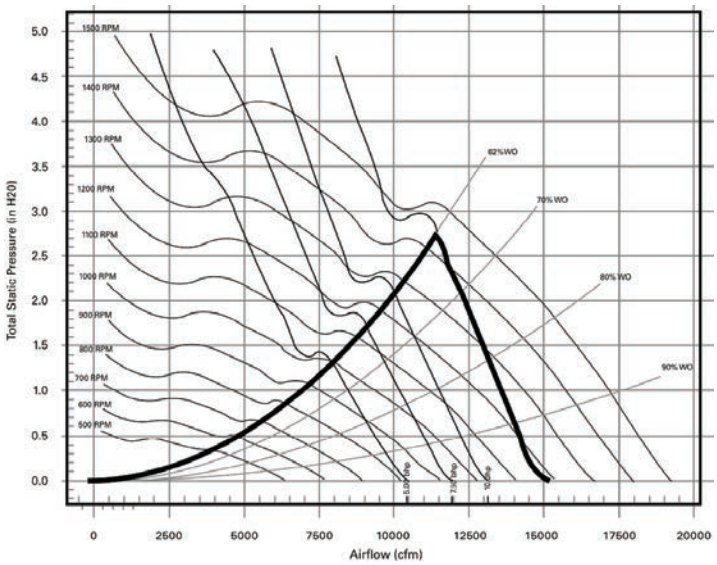

Table 191. Fan performance (front/back supply with 11x15 blower wheel) 25 tons GEVE300 (includes wet coil, no filter)

Std Airflow CFM	Unit External Static Pressure inches W.G. (Wet Coil, 3% Drive Loss Included & No Return Air Filter)													
	0.1		0.2		0.3		0.4		0.5		0.6		0.7	
	RPM	BHP	RPM	BHP	RPM	BHP	RPM	BHP	RPM	BHP	RPM	BHP	RPM	BHP
8000	—	—	—	—	—	—	—	—	—	—	755(a)	3.42(a)	780(a)	3.59(a)
9000	—	—	—	—	760(a)	4.18(a)	777(a)	4.31(a)	795(a)	4.44(a)	814(a)	4.58(a)	836(a)	4.75(a)
10000	—	—	—	—	835(b)	5.64(b)	849(b)	5.78(b)	864(b)	5.92(b)	880(b)	6.06(b)	897(b)	6.21(b)
11000	885(b)	7.09(b)	898(b)	7.25(b)	910(b)	7.41(b)	923(d)	7.56(d)	936(d)	7.72(d)	950(d)	7.87(d)	965(d)	8.02(d)
12000	963(d)	9.17(d)	975(d)	9.35(d)	987(d)	9.52(d)	998(d)	9.69(d)	1010(d)	9.86(d)	1022(d)	10.02(d)	—	—
Std Airflow CFM	Unit External Static Pressure inches W.G. (Wet Coil, 3% Drive Loss Included & No Return Air Filter)													
	0.8		0.9		1.0		1.1		1.2		1.3		1.4	
	RPM	BHP	RPM	BHP	RPM	BHP	RPM	BHP	RPM	BHP	RPM	BHP	RPM	BHP
8000	804(a)	3.75(a)	829(a)	3.93(a)	853(a)	4.10(a)	876(a)	4.27(a)	898(a)	4.43(a)	921(a)	4.61(a)	944(a)	4.80(a)
9000	859(a)	4.95(a)	881(b)	5.14(b)	903(b)	5.33(b)	925(b)	5.52(b)	946(b)	5.71(b)	966(b)	5.90(b)	987(b)	6.09(b)
10000	916(b)	6.39(b)	936(b)	6.59(b)	957(b)	6.82(b)	976(b)	7.02(b)	996(b)	7.23(b)	1016(b)	7.44(b)	1035(d)	7.65(d)
11000	980(d)	8.18(d)	996(d)	8.37(d)	1014(d)	8.58(d)	1032(d)	8.81(d)	1050(d)	9.04(d)	1069(d)	9.28(d)	1087(d)	9.51(d)
12000	—	—	—	—	—	—	—	—	1107(d)	11.16(d)	1124(d)	11.41(d)	1141(d)	11.67(d)
Std Airflow CFM	Unit External Static Pressure inches W.G. (Wet Coil, 3% Drive Loss Included & No Return Air Filter)													
	1.5		1.6		1.7		1.8		1.9		2.0		2.1	
	RPM	BHP	RPM	BHP	RPM	BHP	RPM	BHP	RPM	BHP	RPM	BHP	RPM	BHP
8000	967(a)	4.99(a)	990(b)	5.21(b)	1015(b)	5.47(b)	—	—	—	—	—	—	—	—
9000	1008(b)	6.29(b)	1028(b)	6.48(b)	1047(b)	6.67(b)	1067(c)	6.88(c)	1087(c)	7.11(c)	1109(c)	7.36(c)	—	—
10000	1054(d)	7.87(d)	1073(d)	8.08(d)	1091(d)	8.29(d)	1110(d)	8.52(d)	1127(d)	8.72(d)	1146(e)	8.94(e)	1164(e)	9.16(e)
11000	1105(d)	9.74(d)	1122(d)	9.97(d)	1140(d)	10.21(d)	—	—	—	—	—	—	—	—

[23] *Includes wet coil, no filter*

Table 191. Fan performance (front/back supply with 11x15 blower wheel) 25 tons GEVE300 (includes wet coil, no filter) (continued)

Std Airflow CFM	Unit External Static Pressure inches W.G. (Wet Coil, 3% Drive Loss Included & No Return Air Filter)													
	0.1		0.2		0.3		0.4		0.5		0.6		0.7	
	RPM	BHP	RPM	BHP	RPM	BHP	RPM	BHP	RPM	BHP	RPM	BHP	RPM	BHP
12000	—	—	—	—	—	—	—	—	—	—	—	—	—	—

Std Airflow CFM	Unit External Static Pressure inches W.G. (Wet Coil, 3% Drive Loss Included & No Return Air Filter)					
	2.2		2.3		2.4	
	RPM	BHP	RPM	BHP	RPM	BHP
8000	—	—	—	—	—	—
9000	—	—	—	—	—	—
10000	1182(e)	9.40(e)	1200(e)	9.64(e)	1219(e)	9.91(e)
11000	—	—	—	—	—	—
12000	—	—	—	—	—	—

	Digit 12 - Drive Package	
Legend	single speed motor	two speed motor
(a)	A	1
(b)	B	2
(c)	C	3
(d)	D	4
(e)	E	5

Figure 34. Fan performance curve (front/back supply with 12x12 blower wheel) 25 tons GEVE300[24]

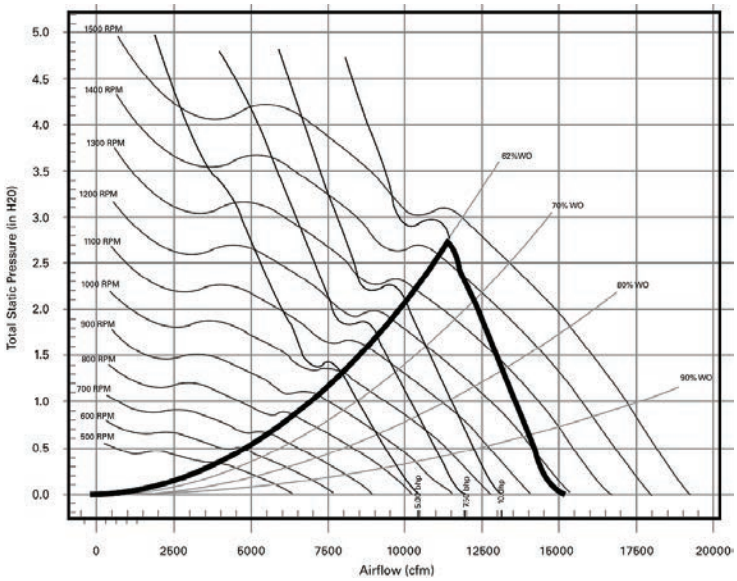

[24] *Includes wet coil, no filter*

Table 192. Fan performance (front/back supply with 12x12 blower wheel) 25 tons GEVE300 (includes wet coil, no filter)

Std Airflow CFM	Unit External Static Pressure inches W.G. (Wet Coil, 3% Drive Loss Included & No Return Air Filter)													
	1.8		1.9		2.0		2.1		2.2		2.3		2.4	
	RPM	BHP	RPM	BHP	RPM	BHP	RPM	BHP	RPM	BHP	RPM	BHP	RPM	BHP
8000	1356(g)	6.25(g)	1379(g)	6.42(g)	1400(g)	6.59(g)	1422(g)	6.76(g)	1443(g)	6.93(g)	1463(g)	7.1(g)	1484(g)	7.27(g)
9000	—	—	—	—	—	—	1490(h)	8.55(h)	1510(h)	8.74(h)	1531(h)	8.94(h)	1549(h)	9.12(h)
10000	—	—	—	—	—	—	—	—	—	—	—	—	—	—
11000	—	—	—	—	—	—	—	—	—	—	—	—	—	—
12000	—	—	—	—	—	—	—	—	—	—	—	—	—	—

Std Airflow CFM	Unit External Static Pressure inches W.G. (Wet Coil, 3% Drive Loss Included & No Return Air Filter)											
	2.5		2.6		2.7		2.8		2.9		3.0	
	RPM	BHP	RPM	BHP	RPM	BHP	RPM	BHP	RPM	BHP	RPM	BHP
8000	1505(h)	7.45(h)	1522(h)	7.6(h)	1542(h)	7.76(h)	1562(h)	7.94(h)	1581(h)	8.11(h)	1600(h)	8.29(h)
9000	1569(h)	9.32(h)	1588(h)	9.5(h)	1608(h)	9.71(h)	1625(h)	9.89(h)	1644(h)	10.08(h)	1662(h)	10.28(h)
10000	—	—	1658(j)	11.76(j)	1676(j)	11.96(j)	1693(j)	12.17(j)	1711(j)	12.38(j)	1729(j)	12.6(j)
11000	—	—	—	—	—	—	1765(j)	14.82(j)	—	—	—	—
12000	—	—	—	—	—	—	—	—	—	—	—	—

	Digit 12 - Drive Package	
Legend	single speed motor	two speed motor
(g)	G	7
(h)	H	8
(j)	J	9

Table 193. Added pressure drop through optional filters (inches water column), 0.5 to 5 tons, GE*006-060

Model No.	CFM	2" MERV 8	2" MERV13	4" MERV 8	4" MERV13
GEHE006	172	0.03	0.04	N/A	N/A
GEHE006	183	0.04	0.04	N/A	N/A
GEHE006	194	0.04	0.04	N/A	N/A
GEHE006	204	0.04	0.05	N/A	N/A
GEHE006	215	0.04	0.05	N/A	N/A
GEHE006	237	0.05	0.06	N/A	N/A
GEHE006	247	0.05	0.06	N/A	N/A
GEHE006	258	0.06	0.06	N/A	N/A
GEHE009	228	0.05	0.05	N/A	N/A
GEHE009	242	0.05	0.06	N/A	N/A
GEHE009	257	0.05	0.06	N/A	N/A
GEHE009	271	0.06	0.06	N/A	N/A
GEHE009	285	0.06	0.07	N/A	N/A
GEHE009	314	0.07	0.08	N/A	N/A
GEHE009	328	0.07	0.08	N/A	N/A

Table 193. Added pressure drop through optional filters (inches water column), 0.5 to 5 tons, GE*006-060 (continued)

Model No.	CFM	2" MERV 8	2" MERV13	4" MERV 8	4" MERV13
GEHE009	342	0.08	0.09	N/A	N/A
GEHE012	304	0.07	0.07	N/A	N/A
GEHE012	323	0.07	0.08	N/A	N/A
GEHE012	342	0.08	0.09	N/A	N/A
GEHE012	361	0.08	0.09	N/A	N/A
GEHE012	380	0.09	0.10	N/A	N/A
GEHE012	418	0.10	0.11	N/A	N/A
GEHE012	437	0.10	0.12	N/A	N/A
GEHE012	456	0.11	0.12	N/A	N/A
GEHE015	380	0.09	0.10	N/A	N/A
GEHE015	404	0.09	0.11	N/A	N/A
GEHE015	428	0.10	0.11	N/A	N/A
GEHE015	451	0.11	0.12	N/A	N/A
GEHE015	475	0.11	0.13	N/A	N/A
GEHE015	523	0.13	0.15	N/A	N/A
GEHE015	546	0.13	0.16	N/A	N/A
GEHE015	570	0.14	0.16	N/A	N/A
GEHE018	456	0.07	0.08	N/A	N/A
GEHE018	485	0.08	0.09	N/A	N/A
GEHE018	513	0.08	0.09	N/A	N/A
GEHE018	542	0.09	0.10	N/A	N/A
GEHE018	570	0.09	0.11	N/A	N/A
GEHE018	627	0.11	0.12	N/A	N/A
GEHE018	656	0.11	0.13	N/A	N/A
GEHE018	684	0.12	0.14	N/A	N/A
GEHE024	608	0.10	0.12	N/A	N/A
GEHE024	646	0.11	0.13	N/A	N/A
GEHE024	684	0.12	0.14	N/A	N/A
GEHE024	722	0.13	0.15	N/A	N/A
GEHE024	760	0.13	0.16	N/A	N/A
GEHE024	836	0.15	0.18	N/A	N/A
GEHE024	874	0.16	0.19	N/A	N/A
GEHE024	912	0.17	0.20	N/A	N/A
GEHE030	720	0.11	0.13	N/A	N/A
GEHE030	765	0.12	0.14	N/A	N/A
GEHE030	810	0.13	0.15	N/A	N/A
GEHE030	855	0.14	0.16	N/A	N/A
GEHE030	900	0.15	0.18	N/A	N/A
GEHE030	990	0.17	0.20	N/A	N/A
GEHE030	1035	0.18	0.21	N/A	N/A

Table 193. Added pressure drop through optional filters (inches water column), 0.5 to 5 tons, GE*006-060 (continued)

Model No.	CFM	2" MERV 8	2" MERV13	4" MERV 8	4" MERV13
GEHE030	1080	0.19	0.23	N/A	N/A
GEHE035	912	0.16	0.18	N/A	N/A
GEHE035	969	0.17	0.20	N/A	N/A
GEHE035	1026	0.18	0.22	N/A	N/A
GEHE035	1083	0.19	0.23	N/A	N/A
GEHE035	1140	0.21	0.25	N/A	N/A
GEHE035	1254	0.23	0.29	N/A	N/A
GEHE035	1311	0.25	0.31	N/A	N/A
GEHE035	1368	0.26	0.32	N/A	N/A
GEHE042	1064	0.19	0.23	N/A	N/A
GEHE042	1131	0.20	0.25	N/A	N/A
GEHE042	1197	0.22	0.27	N/A	N/A
GEHE042	1264	0.24	0.29	N/A	N/A
GEHE042	1330	0.25	0.31	N/A	N/A
GEHE042	1463	0.29	0.36	N/A	N/A
GEHE042	1530	0.30	0.38	N/A	N/A
GEHE042	1596	0.32	0.41	N/A	N/A
GEHE048	1216	0.15	0.17	N/A	N/A
GEHE048	1292	0.16	0.19	N/A	N/A
GEHE048	1368	0.17	0.20	N/A	N/A
GEHE048	1444	0.18	0.22	N/A	N/A
GEHE048	1520	0.19	0.23	N/A	N/A
GEHE048	1672	0.22	0.26	N/A	N/A
GEHE048	1748	0.23	0.28	N/A	N/A
GEHE048	1824	0.24	0.30	N/A	N/A
GEHE060	1520	0.19	0.23	N/A	N/A
GEHE060	1615	0.21	0.25	N/A	N/A
GEHE060	1710	0.22	0.27	N/A	N/A
GEHE060	1805	0.24	0.30	N/A	N/A
GEHE060	1900	0.26	0.32	N/A	N/A
GEHE060	2090	0.29	0.36	N/A	N/A
GEHE060	2185	0.31	0.39	N/A	N/A
GEHE060	2280	0.33	0.41	N/A	N/A
GEVG006	152	0.03	0.06	0.02	0.04
GEVG006	162	0.04	0.06	0.02	0.05
GEVG006	171	0.04	0.06	0.02	0.05
GEVG006	181	0.04	0.07	0.02	0.05
GEVG006	190	0.04	0.07	0.02	0.05
GEVG006	200	0.05	0.08	0.02	0.05
GEVG006	209	0.05	0.08	0.03	0.06

Table 193. Added pressure drop through optional filters (inches water column), 0.5 to 5 tons, GE*006-060 (continued)

Model No.	CFM	2" MERV 8	2" MERV13	4" MERV 8	4" MERV13
GEVG006	219	0.05	0.08	0.03	0.06
GEVG006	228	0.06	0.09	0.03	0.06
GEVG009	228	0.06	0.09	0.03	0.06
GEVG009	242	0.06	0.09	0.03	0.07
GEVG009	257	0.06	0.10	0.03	0.07
GEVG009	271	0.07	0.11	0.04	0.07
GEVG009	285	0.07	0.11	0.04	0.08
GEVG009	299	0.08	0.12	0.04	0.08
GEVG009	314	0.08	0.13	0.05	0.09
GEVG009	328	0.09	0.13	0.05	0.09
GEVG009	342	0.09	0.14	0.05	0.10
GEVG012	304	0.08	0.12	0.04	0.09
GEVG012	323	0.08	0.13	0.05	0.09
GEVG012	342	0.09	0.14	0.05	0.10
GEVG012	361	0.10	0.15	0.06	0.11
GEVG012	380	0.10	0.16	0.06	0.11
GEVG012	399	0.11	0.17	0.07	0.12
GEVG012	418	0.11	0.18	0.07	0.13
GEVG012	437	0.12	0.19	0.08	0.14
GEVG012	456	0.13	0.20	0.08	0.15
GEVG015	380	0.07	0.11	0.04	0.08
GEVG015	404	0.08	0.12	0.04	0.09
GEVG015	428	0.08	0.13	0.05	0.09
GEVG015	451	0.09	0.14	0.05	0.10
GEVG015	475	0.09	0.15	0.06	0.10
GEVG015	499	0.10	0.16	0.06	0.11
GEVG015	523	0.10	0.17	0.07	0.12
GEVG015	546	0.11	0.18	0.07	0.13
GEVG015	570	0.12	0.19	0.08	0.13
GEVG018	456	0.09	0.14	0.05	0.10
GEVG018	485	0.10	0.15	0.06	0.11
GEVG018	513	0.10	0.16	0.06	0.12
GEVG018	542	0.11	0.17	0.07	0.12
GEVG018	570	0.12	0.19	0.08	0.13
GEVG018	599	0.12	0.20	0.08	0.14
GEVG018	627	0.13	0.21	0.09	0.15
GEVG018	656	0.14	0.22	0.10	0.16
GEVG018	684	0.14	0.23	0.10	0.17
GEVG024	608	0.11	0.17	0.07	0.12
GEVG024	646	0.11	0.18	0.07	0.13

Table 193. Added pressure drop through optional filters (inches water column), 0.5 to 5 tons, GE*006-060 (continued)

Model No.	CFM	2" MERV 8	2" MERV13	4" MERV 8	4" MERV13
GEVG024	684	0.12	0.19	0.08	0.14
GEVG024	722	0.13	0.21	0.09	0.15
GEVG024	760	0.14	0.22	0.10	0.16
GEVG024	798	0.14	0.24	0.10	0.18
GEVG024	836	0.15	0.25	0.11	0.19
GEVG024	874	0.16	0.27	0.12	0.20
GEVG024	912	0.17	0.28	0.13	0.22
GEVG030	760	0.14	0.22	0.10	0.16
GEVG030	808	0.15	0.24	0.11	0.18
GEVG030	855	0.16	0.26	0.12	0.20
GEVG030	903	0.17	0.28	0.13	0.21
GEVG030	950	0.18	0.30	0.14	0.23
GEVG030	998	0.19	0.32	0.16	0.25
GEVG030	1045	0.20	0.34	0.17	0.27
GEVG030	1093	0.21	0.36	0.18	0.29
GEVG030	1140	0.22	0.38	0.20	0.31
GEVG036	912	0.12	0.19	0.08	0.14
GEVG036	969	0.13	0.20	0.09	0.15
GEVG036	1026	0.14	0.22	0.09	0.16
GEVG036	1083	0.14	0.23	0.10	0.18
GEVG036	1140	0.15	0.25	0.11	0.19
GEVG036	1197	0.16	0.27	0.12	0.20
GEVG036	1254	0.17	0.28	0.13	0.22
GEVG036	1311	0.18	0.30	0.15	0.24
GEVG036	1368	0.19	0.32	0.16	0.25
GEVG042	1064	0.14	0.23	0.10	0.17
GEVG042	1131	0.15	0.25	0.11	0.19
GEVG042	1197	0.16	0.27	0.12	0.20
GEVG042	1264	0.17	0.29	0.14	0.22
GEVG042	1330	0.18	0.31	0.15	0.24
GEVG042	1397	0.19	0.33	0.16	0.26
GEVG042	1463	0.20	0.35	0.18	0.28
GEVG042	1530	0.21	0.37	0.19	0.30
GEVG042	1596	0.22	0.39	0.21	0.33
GEVG048	1216	0.12	0.19	0.08	0.14
GEVG048	1292	0.13	0.21	0.09	0.15
GEVG048	1368	0.14	0.23	0.10	0.17
GEVG048	1444	0.15	0.24	0.11	0.18
GEVG048	1520	0.16	0.26	0.12	0.20
GEVG048	1596	0.17	0.28	0.13	0.21

Table 193. Added pressure drop through optional filters (inches water column), 0.5 to 5 tons, GE*006-060 (continued)

Model No.	CFM	2" MERV 8	2" MERV13	4" MERV 8	4" MERV13
GEVG048	1672	0.17	0.29	0.14	0.23
GEVG048	1748	0.18	0.31	0.15	0.25
GEVG048	1824	0.19	0.33	0.16	0.26
GEVG060	1520	0.16	0.26	0.12	0.20
GEVG060	1615	0.17	0.28	0.13	0.22
GEVG060	1710	0.18	0.30	0.15	0.24
GEVG060	1805	0.19	0.33	0.16	0.26
GEVG060	1900	0.20	0.35	0.18	0.28
GEVG060	1995	0.21	0.37	0.19	0.31
GEVG060	2090	0.23	0.40	0.21	0.33
GEVG060	2185	0.24	0.43	0.23	0.36
GEVG060	2280	0.25	0.45	0.25	0.38

Table 194. Added pressure drop through optional filters (inches water column), 6 to 25 tons, GE*072-300

Model No.	CFM	MERV 8	MERV 13
GEHE072	1920	0.09	0.10
GEHE072	2160	0.10	0.12
GEHE072	2400	0.12	0.14
GEHE072	2640	0.13	0.15
GEHE072	2880	0.15	0.17
GEHE090	2400	0.12	0.14
GEHE090	2700	0.13	0.16
GEHE090	3000	0.15	0.18
GEHE090	3300	0.17	0.21
GEHE090	3600	0.19	0.23
GEHE120	3200	0.17	0.20
GEHE120	3600	0.19	0.23
GEHE120	4000	0.22	0.27
GEHE120	4400	0.25	0.31
GEHE120	4800	0.28	0.35
GEHE150	4000	0.17	0.20
GEHE150	4500	0.19	0.23
GEHE150	5000	0.22	0.27
GEHE150	5500	0.25	0.31
GEHE150	6000	0.28	0.35
GEHE180	4800	0.21	0.25
GEHE180	5400	0.24	0.30
GEHE180	6000	0.28	0.35
GEHE180	6600	0.32	0.40
GEHE180	7200	0.36	0.46

Table 194. Added pressure drop through optional filters (inches water column), 6 to 25 tons, GE*072-300 (continued)

Model No.	CFM	MERV 8	MERV 13
GEVE072	1920	0.08	0.09
GEVE072	2160	0.10	0.11
GEVE072	2400	0.11	0.12
GEVE072	2640	0.12	0.14
GEVE072	2880	0.14	0.16
GEVE090	2400	0.11	0.12
GEVE090	2700	0.13	0.15
GEVE090	3000	0.14	0.17
GEVE090	3300	0.16	0.19
GEVE090	3600	0.18	0.21
GEVE120	3200	0.15	0.18
GEVE120	3600	0.18	0.21
GEVE120	4000	0.20	0.25
GEVE120	4400	0.23	0.28
GEVE120	4800	0.26	0.32
GEVE150	4000	0.09	0.11
GEVE150	4500	0.11	0.12
GEVE150	5000	0.12	0.14
GEVE150	5500	0.14	0.16
GEVE150	6000	0.15	0.18
GEVE180	4800	0.12	0.14
GEVE180	5400	0.13	0.16
GEVE180	6000	0.15	0.18
GEVE180	6600	0.17	0.21
GEVE180	7200	0.19	0.23
GEVE240	6400	0.17	0.20
GEVE240	7200	0.19	0.23
GEVE240	8000	0.22	0.27
GEVE240	8800	0.25	0.31
GEVE240	9600	0.28	0.35
GEVE300	8000	0.22	0.27
GEVE300	9000	0.26	0.32
GEVE300	10000	0.30	0.37
GEVE300	11000	0.34	0.43
GEVE300	12000	0.38	0.49

Note: Added pressure drop should be considered when utilizing optional MERV 8 and MERV 13 filters.

Table 195. Waterside economizer performance 0.5 to 25 tons

Unit Model Number	scfm	GPM	Total Capacity (Mbh)	Sensible Capacity (Mbh)	LVG. Air DB (°F)	LVG. Air WB (°F)	Standard APD (in. wg.)	LVG. Fluid Temp (°F)	Fluid PD (FT H2O)	Fluid PD Coil In (FT H2O)	Fluid PD Coil Out (FT H2O)
GEHE006	215	1.5	6.63	4.92	58.8	57.3	0.04	53.8	0.34	—	—
GEHE006	215	1.8	7.15	5.01	58.4	56.5	0.04	52.9	0.46	—	—
GEHE006	215	2	7.45	5.11	58	56	0.04	52.5	0.55	—	—
GEHE009	285	1.7	7.86	5.91	61.1	58.4	0.07	54.2	0.42	—	—
GEHE009	285	2.1	8.49	6.14	60.3	57.7	0.07	53.1	0.6	—	—
GEHE009	285	2.3	8.76	6.25	60	57.3	0.07	52.6	0.71	—	—
GEHE012	380	2.2	9.75	7.41	62.2	59.1	0.11	53.8	0.65	—	—
GEHE012	380	2.8	10.6	7.72	61.4	58.3	0.11	52.6	0.99	—	—
GEHE012	380	3.1	11.03	7.91	61	57.9	0.11	52.1	1.18	—	—
GEHE015	460	2.8	11.44	8.68	62.7	59.3	0.15	53.1	0.99	—	—
GEHE015	460	3.5	12.33	9.03	62.1	58.7	0.15	52	1.46	—	—
GEHE015	460	3.8	12.69	9.19	61.7	58.4	0.15	51.7	1.69	—	—
GEHE018	570	3.3	16.27	11.71	61.2	58.1	0.12	54.8	1.36	—	—
GEHE018	570	4.2	17.61	12.25	60.4	57.3	0.12	53.4	2.08	—	—
GEHE018	570	4.6	18.05	12.42	60.1	57	0.12	52.8	2.45	—	—
GEHE024	760	4.4	20.25	14.65	62.4	58.7	0.19	54.2	2.26	—	—
GEHE024	760	5.5	21.58	15.21	61.7	0.2	0.19	52.8	3.4	—	—
GEHE024	760	6.1	22.19	15.43	61.4	57.9	0.19	52.3	4.03	—	—
GEHE030	900	5.5	23.27	16.81	62.9	59	0.25	53.4	3.4	—	—
GEHE030	900	6.9	24.71	17.38	62.3	58.5	0.25	52.1	5.01	—	—
GEHE030	900	7.6	25.28	17.64	62.1	58.3	0.25	51.6	5.95	—	—
GEHE035	1140	6.6	29.28	21.57	62.7	59.1	0.19	53.8	2.39	—	—
GEHE035	1140	8.3	31.47	22.41	62	58.4	0.19	52.6	5.25	—	—
GEHE035	1140	9.1	32.2	22.2	61.8	58.2	0.19	52.1	6.19	—	—
GEHE042	1330	7.8	32.88	24.88	63.4	59.4	0.25	53.4	4.7	—	—
GEHE042	1330	9.7	34.81	25.05	62.8	58.9	0.25	52.2	6.92	—	—
GEHE042	1330	10.7	35.67	25.37	62.6	58.7	0.25	51.6	8.24	—	—
GEHE048	1520	8.8	39.77	29.11	62.5	58.9	0.17	54	1.24	—	—
GEHE048	1520	11	42.44	30.25	61.8	58.3	0.17	52.7	1.86	—	—

Table 195. Waterside economizer performance 0.5 to 25 tons (continued)

Unit Model Number	scfm	GPM	Total Capacity (Mbh)	Sensible Capacity (Mbh)	LVG. Air DB (°F)	LVG. Air WB (°F)	Standard APD (in. wg.)	LVG. Fluid Temp (°F)	Fluid PD (FT H2O)	Fluid PD Coil In (FT H2O)	Fluid PD Coil Out (FT H2O)
GEHE048	1520	12.1	43.65	30.69	61.5	58	0.17	52.2	2.21	—	—
GEHE060	1900	11.6	47.59	34.73	63.3	59.3	0.24	53.2	2.04	—	—
GEHE060	1900	14.5	50.66	35.94	62.7	58.7	0.24	52	3.05	—	—
GEHE060	1900	16	51.87	36.39	62.5	58.5	0.24	51.5	3.65	—	—
GEHE072	2400	13.2	65.2	52.3	60.1	58.6	0.26	54.8	—	3.8	1.1
GEHE072	2400	16.8	73.1	55.3	58.9	57.4	0.27	53.7	—	6.1	1.7
GEHE072	2400	18.6	76.2	56.5	58.5	57	0.27	53.2	—	7.5	2.1
GEHE090	3000	16.5	83.4	52.5	60	58.3	0.31	55.1	—	6.1	1.7
GEHE090	3000	21	92.2	55.2	59	57.3	0.32	53.8	—	9.8	2.7
GEHE090	3000	23.3	95.6	56.3	58.6	56.9	0.32	53.2	—	12	3.3
GEHE120	4000	22	119.8	54.5	59.2	57.6	0.31	55.9	—	9.3	1.2
GEHE120	4000	28	130.3	57	58.3	56.7	0.32	54.3	—	15.1	1.9
GEHE120	4000	31	134.4	58	57.9	56.3	0.32	53.6	—	18.5	2.3
GEHE150	5000	27.5	153.5	116.2	58.7	57.3	0.28	56.1	—	10.7	1.6
GEHE150	5000	35	167.5	121.8	57.7	56.4	0.28	54.5	—	17.4	2.6
GEHE150	5000	38.8	172.9	123.9	57.3	56	0.29	53.9	—	21.3	3.1
GEHE180	6000	33	176.9	135	59.4	57.8	0.37	55.7	—	15.5	2.3
GEHE180	6000	42	191.8	140.8	58.5	56.9	0.38	54.1	—	25	3.7
GEHE180	6000	46.5	197.8	143.2	58.2	56.6	0.38	53.5	—	30.7	4.5
GEVE072	2400	13.2	72.1	55	59.1	57.6	0.29	55.9	—	8.3	1.1
GEVE072	2400	16.8	78.7	57.6	58.1	56.6	0.3	54.3	—	13.4	1.7
GEVE072	2400	18.6	81.3	58.6	57.7	56.2	0.3	53.7	—	16.4	2.1
GEVE090	3000	16.5	88.8	67.9	59.3	57.7	0.32	55.7	—	10	1.7
GEVE090	3000	21	96.7	71	58.4	56.8	0.33	54.2	—	16.2	2.7
GEVE090	3000	23.3	99.8	72.2	58	56.4	0.34	53.6	—	19.9	3.3
GEVE120	4000	22	117.4	89.9	59.4	57.8	0.34	55.6	—	10.1	1.4
GEVE120	4000	28	127.7	94	58.5	56.9	0.35	54.1	—	16.3	2.2
GEVE120	4000	31	131.8	95.6	58.2	56.6	0.36	53.5	—	20	2.7
GEVE150	5000	27.5	160.4	120.6	58	56.9	0.18	56.6	—	6.9	0.9

Table 195. Waterside economizer performance 0.5 to 25 tons (continued)

Unit Model Number	scfm	GPM	Total Capacity (Mbh)	Sensible Capacity (Mbh)	LVG. Air DB (°F)	LVG. Air WB (°F)	Standard APD (in. wg.)	LVG. Fluid Temp (°F)	Fluid PD (FT H2O)	Fluid PD Coil In (FT H2O)	Fluid PD Coil Out (FT H2O)
GEVE150	5000	35	177.4	127.3	56.7	55.7	0.18	55.1	—	11.2	1.5
GEVE150	5000	38.8	184	130	56.2	55.2	0.19	54.5	—	13.8	1.8
GEVE180	6000	33	187.3	141.4	58.5	57.2	0.23	56.3	—	9.8	1.3
GEVE180	6000	42	205.4	148.5	57.4	56.1	0.24	54.8	—	15.9	2.2
GEVE180	6000	46.5	212.3	151.3	56.9	55.7	0.25	54.1	—	19.5	2.7
GEVE240	8000	44	241.7	183.4	59	57.5	0.3	56	—	8.6	0.7
GEVE240	8000	56	263	191.8	58.1	56.6	0.32	54.4	—	13.9	1.1
GEVE240	8000	62	271.3	195.1	57.7	56.2	0.32	53.7	—	17	1.4
GEVE300	10000	55	280.8	219.5	60.1	58.2	0.52	55.2	—	9.8	1.1
GEVE300	10000	70	299	228.4	59.3	57.5	0.52	53.5	—	15.8	1.8
GEVE300	10000	77.5	306.8	232.1	58.9	57.3	0.53	52.9	—	19.4	2.2

Notes:

1. The waterside pressure drops shown only account for the waterside economizer coil.
2. The airside pressure drop shown only accounts for the waterside economizer coil with a wet coil.
3. Capacity is at rated airflow at 80°F/67°F entering air temperature and 45°F entering water temperature.

Table 196. Waterside economizer performance GEVG006–060

MODEL	Airside		Waterside			Cooling Capacity	
	CFM	APD (in. w. g.)	GPM	EWT	WPD (ft. hd.)	Total Mbtuh	Sensible Mbtuh
GEVG006	190	0.04	1.5	45	0.52	6.7	5.0
				50	0.50	5.1	4.4
				55	0.50	4.0	3.8
				60	0.50	3.1	3.0
				65	0.49	2.3	2.3
				70	0.49	1.5	1.5
GEVG009	285	0.07	2.3	45	1.08	8.9	6.9
				50	1.07	6.8	6.1
				55	1.06	5.4	5.2
				60	1.04	4.3	4.2
				65	1.02	3.2	3.2
				70	1.01	2.1	2.1
GEVG012	380	0.12	3.0	45	1.80	11.2	8.7
				50	1.78	8.6	7.9
				55	1.75	6.9	6.7
				60	1.72	5.4	5.3
				65	1.70	4.1	4.1
				70	1.69	2.8	2.8
GEVG015	475	0.10	3.8	45	2.47	14.7	11.5
				50	2.43	11.3	10.1
				55	2.41	9.0	8.7
				60	2.39	7.1	7.0
				65	2.37	5.3	5.2
				70	2.36	3.5	3.5
GEVG018	570	0.14	4.5	45	3.43	17.2	13.4
				50	3.42	13.1	11.9
				55	3.40	10.4	10.1
				60	3.39	8.2	8.0
				65	3.38	6.2	6.1
				70	3.38	4.1	4.1
GEVG024	760	0.17	6.0	45	5.93	22.8	17.8
				50	5.91	17.3	15.7
				55	5.89	13.7	13.3
				60	5.88	10.7	10.5
				65	5.86	8.1	8.0
				70	5.85	5.4	5.4

Table 196. Waterside economizer performance GEVG006–060 (continued)

MODEL	Airside		Waterside			Cooling Capacity	
	CFM	APD (in. w. g.)	GPM	EWT	WPD (ft. hd.)	Total Mbtuh	Sensible Mbtuh
GEVG030	950	0.25	7.5	45	9.17	27.4	21.4
				50	9.15	20.5	18.9
				55	9.12	16.2	15.7
				60	9.10	12.8	12.5
				65	9.08	9.6	9.5
				70	9.06	6.5	6.5
GEVG036	1140	0.20	9.0	45	9.62	35.0	27.3
				50	9.60	26.2	23.8
				55	9.58	20.6	20.0
				60	9.56	16.2	15.9
				65	9.54	12.1	12.0
				70	9.52	8.1	8.1
GEVG042	1330	0.26	10.5	45	13.00	39.5	30.8
				50	12.98	29.5	26.8
				55	12.95	23.2	22.5
				60	12.93	18.3	17.9
				65	12.90	13.8	13.7
				70	12.88	9.2	9.2
GEVG048	1520	0.21	12.0	45	6.40	44.7	34.9
				50	6.39	33.8	31.1
				55	6.38	26.8	26.0
				60	6.37	21.1	20.7
				65	6.36	15.9	15.7
				70	6.35	10.7	10.7
GEVG060	1900	0.30	15.0	45	9.93	53.6	41.8
				50	9.92	40.1	36.9
				55	9.91	31.7	30.7
				60	9.89	25.2	24.7
				65	9.88	19.1	18.9
				70	9.86	12.9	12.9

Notes:

1. The waterside pressure drops shown only account for the waterside economizer coil.
2. The airside pressure drop shown only accounts for the waterside economizer coil with a wet coil.
3. Capacity is at rated airflow at 80°F/67°F entering air temperature.

Table 197. Antifreeze correction factors

Methanol (concentration by volume)						
Item	0%	10%	20%	30%	40%	50%
Cooling Capacity	1.000	0.998	0.997	0.995	0.993	0.992
Heating Capacity	1.000	0.995	0.990	0.985	0.979	0.974

Table 197. Antifreeze correction factors (continued)

Pressure Drop	1.000	1.023	1.057	1.091	1.122	1.160
Ethylene Glycol (concentration by volume)						
Item	**0%**	**10%**	**20%**	**30%**	**40%**	**50%**
Cooling Capacity	1.000	0.996	0.991	0.987	0.983	0.979
Heating Capacity	1.000	0.993	0.985	0.977	0.969	0.961
Pressure Drop	1.000	1.024	1.068	1.124	1.188	1.263
Propylene Glycol (concentration by volume)						
Item	**0%**	**10%**	**20%**	**30%**	**40%**	**50%**
Cooling Capacity	1.000	0.993	0.987	0.980	0.974	0.968
Heating Capacity	1.000	0.986	0.973	0.960	0.948	0.935
Pressure Drop	1.000	1.040	1.098	1.174	1.273	1.405
Brine (NaCL) (concentration by volume)						
Item	**0%**	**10%**	**20%**	**30%**	**40%**	**50%**
Cooling Capacity	1.000	0.994	0.987	0.979	0.971	0.963
Heating Capacity	1.000	0.993	0.987	0.982	0.978	0.976
Pressure Drop	1.000	1.154	1.325	1.497	1.669	1.841

Examples

Example 1 (Ethylene Glycol):

The antifreeze solution is 20% by volume of Ethylene Glycol. Determine the corrected cooling capacity and waterside pressure drop for a GEHE018 when the EWT is 86°F and the GPM is 4.2.

From the catalog data, the cooling capacity at these conditions with 100% water is 17.6 Mbtuh, and the waterside pressure drop is 6.4 feet of head. At 20% Ethylene Glycol, the correction factor for cool capacity is 0.991 and the pressure drop is 1.068.

The corrected cooling capacity (Mbtuh) = 17.6 * 0.991 = 17.4. The corrected water side pressure drop (Ft. head) = 6.4 * 1.068 = 6.8.

Example 2 (Propylene Glycol):

The antifreeze solution is 30% by volume of Propylene Glycol. Determine the corrected heating capacity and waterside pressure drop for a GEHE042 when the EWT is 45°F and the GPM is 9.8.

From the catalog data, the heating capacity at these conditions with 100% water is 40.7 Mbtuh, and the waterside pressure drop is 16.6 feet of head. At 30% Propylene Glycol, the correction factor for heat capacity is 0.960 and the pressure drop is 1.174.

The corrected heating capacity (Mbtuh) = 40.7 * 0.960 = 39.1. The corrected water side pressure drop (Ft. head) = 16.6 * 1.174 = 19.5.

Figure 35. Cooling capacity correction factor

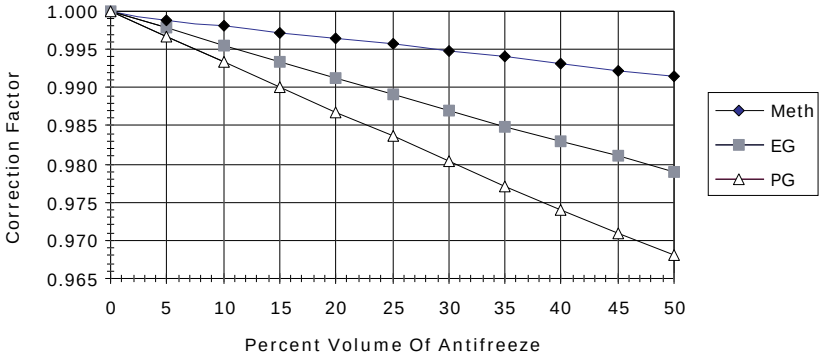

Figure 36. Heating capacity correction factor

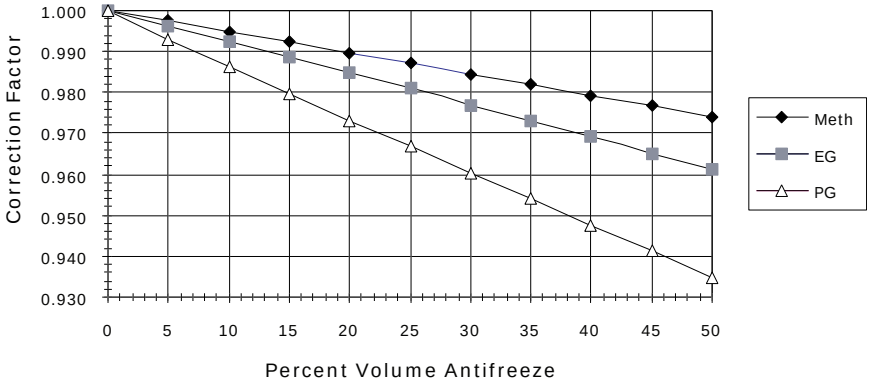

Figure 37. Water pressure drop correction factor

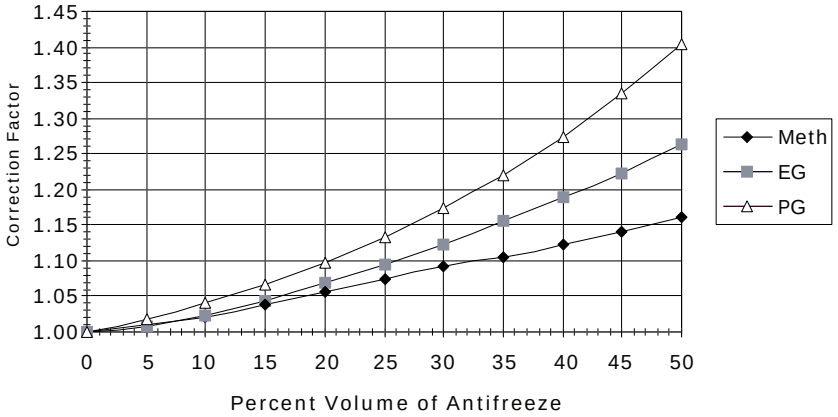

Controls

From our industry-leading building automation systems to equipment controls and sensors, Trane offers a complete portfolio of controls products. Trane unit mounted controls are mounted, wired, configured and tested to deliver a high quality product with time savings at the job site. Our building controls are web-based, flexible and scalable, mobile, easy to use and install, and support open standard protocols such as BACnet®, LONTalk®, and many others.

Deluxe 24V Electronic Controls

The 24 V deluxe design is a microprocessor-based control board conveniently located in the control box. The board is unique to Trane water-source products and is designed to control the unit as well as provide outputs for unit status and fault detection.

The board is factory wired to a terminal point to provide all necessary terminals for field connections.

Figure 38. Deluxe 24V control board

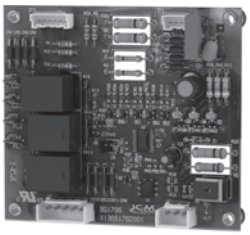

The 24V deluxe design may be applied as a stand-alone control system. The stand-alone design provides accurate temperature control directly through a wall-mounted electronic thermostat.

This system set-up may be utilized in a replacement design where a single unit retrofit is needed. It may be easily interfaced with a field provided control system by way of the factory installed termination point. This stand-alone control is frequently utilized on small jobs where a building controller may not be necessary, or where field installed direct digital controls are specified.

The stand-alone system design provides a low cost option of installation while still allowing room control for each unit. The electric controls includes the following:

- Connection points for low voltage field wiring
- 75 VA Transformer (Note: 50 VA on GEH 0.5-5T heat pump only)
- Anti-short cycle compressor protection
- Brown out protection
- Compressor contactor
- Compressor delay on start
- Compressor lock-out
- Condensate overflow
- Electric heat and compressor enable (6 to 25 tons)
- Freeze protection
- High pressure switch
- Hot gas reheat
- Low pressure switch
- Low pressure time delay
- Random start delay
- Reversing valve coil
- Soft lockout mode

Deluxe 24V Features

Anti-short Cycle Timer

The anti-short cycle timer provides a three minute time delay between compressor stop and compressor restart.

Brown-out Protection

The brown-out protection function measures the input voltage to the controller and halts the compressor operation. Once a brown-out situation has occurred, the anti-short cycle timer will become energized. The general fault contact will not be affected by this condition. The voltage will continue to be monitored until the voltage increases. The compressors will be enabled at this time if all start-up time delays have expired, and all safeties have been satisfied.

Compressor Disable

The compressor disable relay provides a temporary disable in compressor operation. The signal would be provided from a water loop controller in the system. It would disable the compressor because of low water flow, peak limiting or if the unit goes into an unoccupied state. Once the compressor has been disabled, the anti-short cycle time period will begin. Once the compressor disable signal is no longer present, and all safeties are satisfied, the control will allow the compressor to restart.

Diagnostics

Three LEDs (light emitting diodes) are provided for indicating the operating mode of the controller. See the unit IOM for diagnostics or troubleshooting through the use of the LEDs.

Generic Relay

A generic relay is on the board and may be available for field use. Many factory options utilize this relay, and it will be unavailable for field use in those applications.

A 24 Vac signal will energize the relay coil on terminals R1 and R2. Terminals C (common), NO (normally open), and NC (normally closed) will be provided for the relay contacts.

Random Start

The random start relay provides a time delay start-up of the compressor when cycling in the occupied mode. A new start delay time between 3 and 10 seconds is applied each time power is enabled to the unit.

Safety Control

The deluxe controller receives separate input signals from the refrigerant high pressure switch, low suction pressure switch, freezestat and condensate overflow.

In a high pressure situation, the compressor contactor is de-energized, which suspends compressor operation. The control will go into soft lockout mode initializing a three minute time delay and a random start of 3 to 10 second time delays. Once these delays have expired, the unit will be allowed to run. If a high pressure situation occurs within one hour of the first situation, the control will be placed into a manual lockout mode, halting compressor operation, and initiating the general alarm.

In a low temperature situation, the low pressure switch will transition open after the compressor starts. If the switch is open for 45 seconds during compressor start, the unit will go into soft lockout mode initializing a three minute time delay and a random start of 3 to 10 second time delays. Once these delays have expired, the unit will be allowed to run. If the low pressure situation occurs again within 30 minutes, and the device is open for more than 45 seconds, the control will be placed into a manual lockout mode, halting compressor operation, and initiating the general alarm.

In a condensate overflow situation, the control will go into manual lockout mode, halting compressor operation, and initiating the general alarm.

The general alarm is initiated when the control goes into a manual lockout mode for either high pressure, low pressure, freezestat or condensate overflow conditions.

High and Low Pressure Switches

System safety devices are provided through the use of low/high pressure switches in the refrigeration circuit to help prevent compressor damage. The low pressure switch is set to activate at refrigerant

pressures of 40 psig to fit most applications. In cases where a low charge, or excessive loss of charge occurs, each compressor comes equipped with an external overload device to halt the compressor operation.

The high pressure switch prevents compressor operation during high or excessive discharge pressures that exceed 650 psig.

Figure 39. High and low pressure switches

Tracer® Controls

The Tracer® family of controllers, ZN524, UC400, and UC400B offer the combined advantages of simple and dependable operation with the latest Trane-designed controller. Standard control features include options normally available on more elaborate control systems. All control options are available factory-configured or can be field-configured using Rover service software (ZN524) and the UC400 is serviced via Tracer® TU. For more detailed information, refer to CNT-SVX11*-EN (for Tracer® ZN524), BAS-SVX065*-EN (for UC400B), or the most recent version of the publication. Tracer® ZN524 and UC400(B) are DDC that when applied to water-source equipment provide control of the entire unit, as well as outputs for unit status and fault detection. Each device is factory installed, commissioned, and tested to ensure the highest level of quality in unit design.

Figure 40. Tracer® UC400B

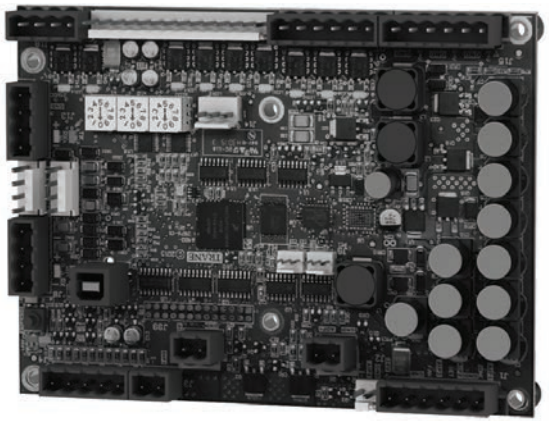

Each controller feature and option was selected to coordinate with the unit hardware to provide greater energy efficiency and equipment safety to prolong the equipment life.

Trane® WSHP with DDC controllers features include 75VA transformer, compressor contactor, compressor lockout function, random start delay, heating/cooling status, occupied/unoccupied mode, low pressure switch, high pressure switch, fan and filter status optional, reversing valve, fan motor, termination points (for low voltage field wiring), condensate overflow and freeze protection. Additional features include two-position water isolation valve support (for variable speed pumping). Optional features include boilerless control for electric heat, waterside economizer, hot gas reheat (for dehumidification) .

Tracer® ZN524

The ZN524 controller can be used in a stand-alone application or as part of a Trane® Integrated Comfort™ System (ICS). The Tracer® ZN524 is LonTalk® certified. It is capable of working with, and talking to other LonTalk® certified controllers providing the building owner more choices, and the design engineers more flexibility to meet the challenges of building automation.

Tracer® UC400/400B

The Tracer® UC400(B) is a BTL Listed BACnet® controller that can operate stand-alone or within a Building Automation system such as Tracer® SC.

Tracer® UC400(B)/ZN524 Functions Include:

Boilerless Control Electric Heat

The controller supports a single stage of boilerless electric heat operation.

Electric heat is used when boilerless heat is enabled/configured and the EWT is too low for compressor operation. When this condition is met, the two-position isolation valve will be closed shutting down the water flow to the unit.

Supplemental Electric Heat (6 to 25 Tons Only)

When the unit is configured for boilerless control, the EWT will be used to determine whether DX heating should be disabled and the electric heater enabled. When these conditions are met, the two-position isolation valve(s) are driven open for three minutes and the entering water temperature reading is taken. The determination as to whether or not to utilize electric heat will be made and the controller will take appropriate action. If boilerless electric heat is enabled, then the isolation valve will be closed, shutting down the water flow to the unit.

When the unit is configured for concurrent operation of DX heating (compressor in heat pump mode) and electric heat, the electric heat will act as a second stage of heat for single compressor units, and a third stage of heat for dual compressor units.

Note: *With concurrent (or supplemental) electric heat, the electric heater is field provided.*

Compressor Operation

The compressor is cycled on and off to meet heating or cooling zone demands. Units (for 6 to 25 tons, single and dual compressor) use the unit capacity and pulse width modulation (PWM) logic along with minimum on/off timers to determine the compressor's operation. The compressor is controlled ON for longer periods as capacity increases and shorter periods as capacity decreases.

Condensate Overflow

When condensate reaches the trip point, a condensate overflow signal generates a diagnostic which disables the fan, unit water valves (if present), and compressor. The unit will remain in a halted state until the condensation returns to a normal level. At this time, the switch in the drain pan will automatically reset. However, the controller's condensate overflow diagnostic must be manually reset to clear the diagnostic and restart the unit.

Figure 41. Building control advantages

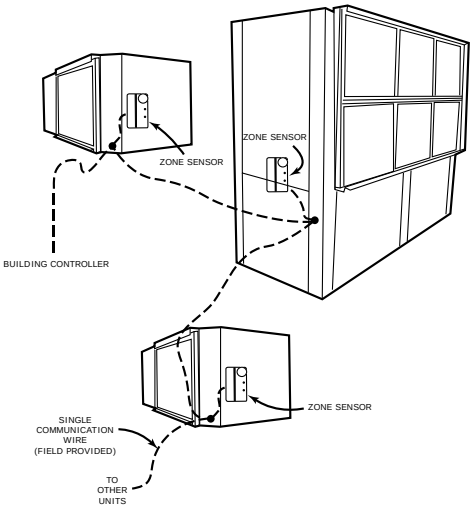

The Tracer® ZN524 or UC400(B) controllers have the ability to share information with one or several units on the same communication link.

An advantage of installing a Tracer® UC400(B) or ZN524 is its capability to work with other BACnet® or LonTalk® controllers. This provides greater flexibility to the building owner, as well as greater flexibility in design.

Integrating the UC400(B) or ZN524 on water-source equipment, and tying it to a Tracer® SC or other BAS system provides a complete building management system. With a Building Automation system like a Tracer® SC, the system can initiate an alarm on a loss of performance on equipment malfunctions; allowing problems to be handled in a timely manner before compromising comfort.

This type of application would most commonly be used for a large space(s) that may require more than one unit. In addition to this application design, UC400(B) and ZN524 controller provides a way for units located within the same space to share the same zone sensor to prevent units from simultaneously heating and cooling in the same space.

Note: *The sharing of information is made possible with a twisted pair of wire and a building automation system or through Trane's service tools*

Data Sharing

The Tracer® UC400(B) and ZN524 controller are capable of sending or receiving data (setpoints, fan request, or space temperature) to and from other controllers on the communication link. This allows multiple units to share a common space temperature sensor in both stand-alone and building automation applications.

Dehumidification

Dehumidification[25] for the water-source heat pump is applicable with the UC400(B) and ZN524. The controller is capable of directing one stage of DX cooling in conjunction with one stage of reheat (hot gas reheat).

Dehumidification can only occur when the controller is in the cooling mode. A humidity sensor is used to measure the zone's relative humidity (RH), then compares the zone relative humidity to the relative humidity enable/disable setpoint parameters. The dehumidification enable and disable points are configurable.

Fan Operation

The supply air fan operates at the predetermined speed in the occupied or occupied standby mode. When switch is set to AUTO, the fan is configured for cycling ON with heating or cooling. In heat mode, the fan will run for 30 seconds beyond compressor shutdown in both occupied and unoccupied mode.

Filter Maintenance Timer

The controller filter status is based on the unit fan's cumulative run hours. The controller compares the fan run time against an adjustable fan run hours limit and recommends unit maintenance as required.

High and Low Pressure Switches

The Tracer® UC400(B) and ZN524 detects the state of the high pressure or low pressure switches. When a fault is sensed by one of these switches, the corresponding message is sent to the controller to be logged into the fault log. When the circuit returns to normal, the high pressure control and low pressure control automatically reset. If a second fault is detected within a thirty-minute time span, the unit must be manually reset.

Occupancy Modes

The four operations of the Tracer® UC400(B) and ZN524 controller include occupied, occupied standby, occupied bypass and unoccupied.

In an occupied situation, the controller uses occupied heating and cooling setpoints to provide heating and cooling to the building. This occupied operation is normally used during the daytime hours when the building is at the highest occupancy level.

In an occupied standby situation, the controllers heating and cooling setpoints are usually wider than the occupied setpoints. This occupied standby operation is used during daytime hours when people are not present in the space (such as lunchtime or recess). To determine the space occupancy, an occupancy sensor is applied.

[25] *For 6 to 25 ton units, applicable to single and dual circuited*

In an unoccupied situation, the controller assumes the building is vacant, which normally falls in evening hours when a space may be empty. In the unoccupied mode, the controller uses the default unoccupied heating and cooling setpoints stored in the controller. When the building is in unoccupied mode, individual units may be manually placed into timed override of the unoccupied mode at the units wall sensor. During timed override, the controller interprets the request and initiates the occupied setpoint operation, then reports the effective occupancy mode as occupied bypass.

In the occupied bypass mode, the controller applies the occupied heating and cooling setpoint for a 120-minute time limit.

Random Start

To prevent all of the units in a building from energizing major loads at the same time, the controller observes a random start from 0 to 25 seconds. This timer halts the controller until the random start time expires.

Reversing Valve Operation

For cooling, the reversing valve output is energized simultaneously with the compressor. It will remain energized until the controller turns on the compressor for heating. At this time, the reversing valve moves to a de-energized state. In the event of a power failure or controller OFF situation, the reversing valve output will default to the heating (de-energized) state.

Entering Water Temperature Sampling

The controller will sample the entering water temperature to determine proper control action for units equipped with boilerless electric heat or waterside economizer.

Waterside Economizer

Entering water temperature (EWT) sampling will automatically occur at power up when the unit is equipped with a waterside economizer (WSE). The EWT is used to determine if economizing is feasible. When the conditions are met, the two-position isolation valve(s) are driven open for three minutes and the EWT reading is taken. The determination as to whether or not the economizer can be enabled will be made and the controller will take appropriate action. The isolation valve will remain open regardless if the WSE or the DX cooling is enabled.

The unit's waterside economizer will contain a 2-position water valve wired to the controller. The economizing water coil will be optimized to provide 100% of the unit capacity at 80.6°F/66.2°F return air temperature with 45°F entering water. The flow rate is established at 86 F entering water temperature and 96°F leaving water temperature.

Low leaving air protection will be furnished to protect the unit against delivering air that is cold enough to sweat discharge air grilles. Coil icing protection will also be provided.

Waterside economizer cooling will be active during occupied, unoccupied and standby cooling modes.

Water Isolation Valve

Variable speed pumping systems are supported by the controller when two-position water isolation valves (12 VA max) are present. The valves are normally closed unless DX heating, DX cooling, waterside economizer or dehumidification is requested. When the two-position isolation valves are driven open for operation, the outputs will be driven for 20 seconds to ensure adequate water flow before the compressor outputs are energized. Once an isolation valve has been opened, it will remain open for a 10 minute minimum to reduce excessive cycling of the valve.

Isolation Valve “ON” Control

The two-position isolation valve output will be energized (controlled open) during compressor heating, compressor cooling, waterside economizing or dehumidification.

When the isolation valve is driven open for compressor operation, the output will be energized 20 seconds prior to the compressor and indoor fan (if not already energized) outputs to ensure adequate water flow to the heat exchanger. To reduce excessive cycling of the isolation valve once opened, the isolation valve will remain open for a minimum of 10 minutes.

Isolation Valve “OFF” Control

The two-position isolation valve output will be de-energized (controlled closed) when there is no longer a call for compressor or WSE operation and the 10 minute minimum on time has expired.

Trane® Air-Fi® Wireless Systems

Trane® Air-Fi® wireless systems provides significant advantages to better meet customer by providing a lower initial cost; ease of installation for reduced risk; increased reliability and flexibility for easier problem solving; and fewer maintenance issues for worry-free operation and cost savings over the life of the system. Trane® Air-Fi® wireless systems helps save time and money, with industry-leading technology and performance.

Air-Fi® Wireless Communications Interface (WCI)

The Air-Fi® Wireless Communications Interface (WCI) enables wireless communications between system controls, unit controls, and wireless sensors for Trane control products that use the BACnet® protocol. The WCI replaces the need for communications wire in all system applications.

Air-Fi® Wireless Communications Sensor (WCS)

The Air-Fi Wireless Communications Sensor (WCS) is compatible with any Trane® controller that uses a WCI, except the Tracer SC. The WCS provides the same functions as many currently available Trane® wired sensors. No further software or hardware is necessary for site evaluation, installation, or maintenance. Space temperature is standard on all models. (A service tool cannot be connected to a Trane® wireless sensor.)

Three WCS models are available:

- Digital display (WCS-SD) model
- Base (WCS-SB) model has no exposed display or user interface
- 2% relative humidity sensor module (WCS-SH), which can be field installed inside either the WCS-SD or WCS-SB

In most applications, one WCS-SD or WCS-SB sensor will be used per WCI acting as a router. However, up to six (6) WCS-SD or WCS-SB sensors can be associated to a single equipment controller or BCI.

Compatibility with Previous Generation Wireless Zone Products

Our previous line of wireless zone sensors (WZS, WTS, and WDS) are not compatible with the Air-Fi® Wireless Communications Interface (WCI).

The new Air-Fi® Wireless Communications Sensor (WCS) are compatible with old WCIs that have updated firmware.

Wired Zone Sensors

Wired zone sensors can be used with Air-Fi® wireless systems.

Thermostats and Zone Sensors

Table 198. Thermostat selection for use with the Deluxe controller

Thermostat	Part Number	Description
	X13511535010	1 Heat/1 Cool, non-programmable commercial thermostat for conventional air conditioners and heat pumps that are configured without auxiliary heat • 1 H/1 C
	X13511536010	3 Heat/2 Cool, non-programmable commercial thermostat for conventional air conditioners and heat pumps that are configured with or without auxiliary heat. • 3 H/2 C
	X13511537010	3 Heat/2 Cool, programmable commercial thermostat for conventional (rooftop) air conditioners and heat pumps that are configured with or without auxiliary heat. • 3 H/2 C
	X13511538010	3Heat/2 Cool, programmable touch screen thermostat for conventional air conditioners and heat pump systems. The thermostat will provide the human interface, zone temperature sensing both local and optional remote temperature sensing, and set point scheduling on a daily/ weekly basis. This thermostat can also display humidity with a control signal for dehumidification with a local humidity sensor or optional remote humidity sensor. • 3 H/2 C
	Pivot — BAYSTAT814A-W.	Pivot Smart Thermostat is a Wi-Fi/ethernet thermostat for commercial applications. It has a very simple interface for occupants to adjust the thermostat. Cooling and heating control of multiple systems is made even easier and faster when connected to the Pivot App. Supports 2 stage heat pump with auxiliary heat.
	XL824 - TCONT824AS52DB.	The XL824 Smart thermostat is a Wi-Fi/ethernet thermostat for Residential applications such as single family homes, condominiums and apartments. Supports 2 stage heat pump with auxiliary heat. The XL824 can be connected to the Nexia Home App and other home automation systems.

Table 199. Zone sensor selection for use with Tracer® ZN524 and UC400 controller

Sensor	Part Number	Description
	X13790886010	Wired temperature sensor with an LCD display • Allows an occupant to control the temperature setpoint, request timed override of system operation, and provides a COMM module to service technicians. Tracer® ZN524 and UC400 Compatible
	X13651467020	Communication Module • Sold in packs of 12 • Provides local RJ22 connection to Trane® service tools for easy, low cost maintenance.
	X13511529010	Zone Sensor • Tracer® UC400 and ZN524 compatible • External setpoint adjustment wheel
	X13511527010	Zone Sensor • Tracer® UC400 and ZN524 compatible • External setpoint adjustment wheel • ON and CANCEL buttons
	X1379084501	Zone Sensor • Tracer® UC400 and ZN524 compatible • External setpoint adjustment wheel • ON and CANCEL buttons • Fan switch AUTO-OFF
	X1379044401	Temperature and relative humidity sensor • Tracer® UC400 and ZN524 compatible

Table 199. Zone sensor selection for use with Tracer® ZN524 and UC400 controller (continued)

Sensor	Part Number	Description
	X13790993001	Commercial Touch Screen Programmable Zone Sensor • Supports Standby, Occupied, and Unoccupied • 7 day, 5+2 day, and 5+1+1 day • Cannot be used with BAS as sensor ties up BACnet link. For use with factory-programmed UC400. ***Note:*** *Additional configuration is needed in the field to use the Programmable zone sensors (to put BAS points in service on UC400).*
	X13790992001	Residential Touch Screen Programmable Zone Sensor • Supports Awake, Away, Home, and Sleep • 7 day, 5+2 day, and 5+1+1 day • Cannot be used with BAS as sensor ties up BACnet link. For use with factory-programmed UC400. ***Note:*** *Additional configuration is needed in the field to use the Programmable zone sensors (to put BAS points in service on UC400).*

Table 200. Wireless zone sensor selection for use with Tracer® UC400 controller

Sensor	Part Number	Description
	X13790955010	Trane Air-Fi® WCS-SD (display) • Tracer® UC400 Compatible • Easy-to-use interface for clear and simple monitoring and control
	X13790956010	Trane Air-Fi® WCS-SB (base) • Tracer® UC400 Compatible • Simplicity • Eliminates local temperature control when higher control level is required.
	X13790973030	Wireless communications sensor accessory—2% relative humidity (RH) sensor module (WCS-SH) The optional RH sensor module plugs in to any WCS model, further simplifying installation by eliminating the needed for additional wiring.

Table 201. Electrical data standard static motors (0.5 to 25 tons), single speed blower motor (6 to 25 tons)

Model No.	Volts	Total Unit FLA	Comp RLA (ea)	Comp LRA (ea)	No. of Comp.	Blower Motor FLA	Blower Motor hp	Fan Motor Num	Minimum Circuit Ampacity	Maximum Overcur-rent Protective Device	Electric Heat kW[a]	Electric Heat Amps[a]
GEHE006	115/60/1	6.8	5.6	30.0	1	1.20	1/12	1	8.2	15	0.0	0.0
GEHE006	208/60/1	3.9	3.3	14.0	1	0.60	1/12	1	4.73	15	0.0	0.0
GEHE006	208/60/1	4.5	3.3	14.0	1	0.60	1/12	1	5.68	15	0.8	3.9
GEHE006	230/60/1	3.8	3.2	15.0	1	0.60	1/12	1	4.6	15	0.0	0.0
GEHE006	230/60/1	4.9	3.2	15.0	1	0.60	1/12	1	6.18	15	1.0	4.3
GEHE006	265/60/1	3.0	2.5	11.0	1	0.52	1/12	1	3.65	15	0.0	0.0
GEHE006	265/60/1	5.5	2.5	11.0	1	0.52	1/12	1	6.92	15	1.3	5.0
GEHE009	115/60/1	7.6	6.4	36.0	1	1.20	1/12	1	9.2	15	0.0	0.0
GEHE009	208/60/1	4.3	3.7	16.0	1	0.60	1/12	1	5.23	15	0.0	0.0
GEHE009	208/60/1	6.5	3.7	16.0	1	0.60	1/12	1	8.14	15	1.2	5.9
GEHE009	230/60/1	4.1	3.5	17.0	1	0.60	1/12	1	4.98	15	0.0	0.0
GEHE009	230/60/1	7.1	3.5	17.0	1	0.60	1/12	1	8.9	15	1.5	6.5
GEHE009	265/60/1	3.3	2.8	13.0	1	0.52	1/12	1	4.02	15	0.0	0.0
GEHE009	265/60/1	8.1	2.8	13.0	1	0.52	1/12	1	10.08	15	2.0	7.5
GEHE012	115/60/1	13.7	12.1	58.0	1	1.57	1/8	1	16.7	25	0.0	0.0
GEHE012	208/60/1	7.0	6.3	30.0	1	0.70	1/8	1	8.58	15	0.0	0.0
GEHE012	208/60/1	8.5	6.3	27.0	1	0.70	1/8	1	10.67	15	1.6	7.8
GEHE012	230/60/1	7.0	6.3	30.0	1	0.70	1/8	1	8.58	15	0.0	0.0
GEHE012	230/60/1	9.4	6.3	30.0	1	0.70	1/8	1	11.74	15	2.0	8.7
GEHE012	265/60/1	5.7	5.0	23.0	1	0.72	1/8	1	6.97	15	0.0	0.0
GEHE012	265/60/1	10.7	5.0	23.0	1	0.72	1/8	1	13.4	15	2.7	10.0
GEHE015	208/60/1	8.6	7.9	36.0	1	0.70	1/8	1	10.58	15	0.0	0.0
GEHE015	208/60/1	10.3	7.9	36.0	1	0.70	1/8	1	12.89	15	2.0	9.6
GEHE015	230/60/1	8.6	7.9	36.0	1	0.70	1/8	1	10.58	15	0.0	0.0
GEHE015	230/60/1	11.6	7.9	36.0	1	0.70	1/8	1	14.46	15	2.5	10.9
GEHE015	265/60/1	7.1	6.4	30.0	1	0.72	1/8	1	8.72	15	0.0	0.0
GEHE015	265/60/1	13.2	6.4	30.0	1	0.72	1/8	1	16.47	20	3.3	12.5

Table 201. Electrical data standard static motors (0.5 to 25 tons), single speed blower motor (6 to 25 tons) (continued)

Model No.	Volts	Total Unit FLA	Comp RLA (ea)	Comp LRA (ea)	No. of Comp.	Blower Motor FLA	Blower Motor hp	Fan Motor Num	Minimum Circuit Ampacity	Maximum Overcur-rent Protective Device	Electric Heat kW[a]	Electric Heat Amps[a]
GEHE018	208/60/1	10.5	9.6	42.0	1	0.90	1/8	1	12.9	20	0.0	0.0
GEHE018	208/60/1	12.7	9.6	42.0	1	0.90	1/8	1	15.91	20	2.5	11.8
GEHE018	230/60/1	10.5	9.6	42.0	1	0.90	1/8	1	12.9	20	0.0	0.0
GEHE018	230/60/1	13.9	9.6	42.0	1	0.90	1/8	1	17.43	20	3.0	13.0
GEHE018	265/60/1	8.5	7.7	35.0	1	0.80	1/8	1	10.43	15	0.0	0.0
GEHE018	265/60/1	15.9	7.7	35.0	1	0.80	1/8	1	19.87	20	4.0	15.1
GEHE024	208/60/1	14.9	12.8	58.3	1	2.10	1/3	1	18.1	30	0.0	0.0
GEHE024	208/60/1	17.8	12.8	58.3	1	2.10	1/3	1	22.22	30	3.3	15.7
GEHE024	230/60/1	14.9	12.8	58.3	1	2.10	1/3	1	18.1	30	0.0	0.0
GEHE024	230/60/1	19.5	12.8	58.3	1	2.10	1/3	1	24.36	30	4.0	17.4
GEHE024	265/60/1	11.1	9.6	54.0	1	1.53	1/3	1	13.53	20	0.0	0.0
GEHE024	265/60/1	21.5	9.6	54.0	1	1.53	1/3	1	26.91	30	5.3	20.0
GEHE024	208/60/3	9.2	7.7	53.7	1	1.53	1/3	1	11.16	15	0.0	0.0
GEHE024	208/60/3	10.6	7.7	53.7	1	1.53	1/3	1	13.22	15	3.3	9.0
GEHE024	230/60/3	9.8	7.7	53.7	1	2.10	1/3	1	11.73	15	0.0	0.0
GEHE024	230/60/3	12.1	7.7	53.7	1	2.10	1/3	1	15.18	20	4.0	10.0
GEHE024	460/60/3	4.6	3.6	28.0	1	0.95	1/3	1	5.45	15	0.0	0.0
GEHE024	460/60/3	7.6	3.6	28.0	1	0.95	1/3	1	9.5	15	5.3	6.7
GEHE030	208/60/1	16.2	14.1	73.0	1	2.10	1/3	1	19.73	30	0.0	0.0
GEHE030	208/60/1	21.8	14.1	73.0	1	2.10	1/3	1	27.26	30	4.1	19.7
GEHE030	230/60/1	16.2	14.1	73.0	1	2.10	1/3	1	19.73	30	0.0	0.0
GEHE030	230/60/1	23.8	14.1	73.0	1	2.10	1/3	1	29.8	30	5.0	21.7
GEHE030	265/60/1	12.7	11.2	60.0	1	1.53	1/3	1	15.53	25	0.0	0.0
GEHE030	265/60/1	26.4	11.2	60.0	1	1.53	1/3	1	33.04	35	6.6	24.9
GEHE030	208/60/3	11.0	8.9	58.0	1	2.10	1/3	1	13.23	20	0.0	0.0
GEHE030	208/60/3	13.5	8.9	58.0	1	2.10	1/3	1	16.85	20	4.1	11.4
GEHE030	230/60/3	11.0	8.9	58.0	1	2.10	1/3	1	13.23	20	0.0	0.0

Table 201. Electrical data standard static motors (0.5 to 25 tons), single speed blower motor (6 to 25 tons) (continued)

Model No.	Volts	Total Unit FLA	Comp RLA (ea)	Comp LRA (ea)	No. of Comp.	Blower Motor FLA	Blower Motor hp	Fan Motor Num	Minimum Circuit Ampacity	Maximum Overcur-rent Protective Device	Electric Heat kW[a]	Electric Heat Amps[a]
GEHE030	230/60/3	14.7	8.9	58.0	1	2.10	1/3	1	18.31	20	5.0	12.6
GEHE030	460/60/3	5.2	4.2	28.0	1	0.95	1/3	1	6.2	15	0.0	0.0
GEHE030	460/60/3	9.2	4.2	28.0	1	0.95	1/3	1	11.54	15	6.6	8.3
GEHE035	208/60/1	17.7	14.1	77.0	1	3.60	1/2	1	21.23	35	0.0	0.0
GEHE035	208/60/1	27.2	14.1	77.0	1	3.60	1/2	1	33.95	35	4.9	23.6
GEHE035	230/60/1	17.7	14.1	77.0	1	3.60	1/2	1	21.23	35	0.0	0.0
GEHE035	230/60/1	29.7	14.1	77.0	1	3.60	1/2	1	37.11	40	6.0	26.1
GEHE035	265/60/1	15.0	12.2	72.0	1	2.77	1/2	1	18.02	30	0.0	0.0
GEHE035	265/60/1	32.8	12.2	72.0	1	2.77	1/2	1	40.96	45	8.0	30.0
GEHE035	208/60/3	12.6	9.0	71.0	1	3.60	1/2	1	14.85	20	0.0	0.0
GEHE035	208/60/3	17.2	9.0	71.0	1	3.60	1/2	1	21.5	25	4.9	13.6
GEHE035	230/60/3	12.6	9.0	71.0	1	3.60	1/2	1	14.85	20	0.0	0.0
GEHE035	230/60/3	18.7	9.0	71.0	1	3.60	1/2	1	23.33	25	6.0	15.1
GEHE035	460/60/3	7.3	5.6	38.0	1	1.70	1/2	1	8.7	15	0.0	0.0
GEHE035	460/60/3	11.7	5.6	38.0	1	1.70	1/2	1	14.6	15	8.0	10.0
GEHE042	208/60/1	21.5	17.9	112.0	1	3.60	1/2	1	25.98	40	0.0	0.0
GEHE042	208/60/1	31.0	17.9	112.0	1	3.60	1/2	1	38.75	40	5.7	27.4
GEHE042	230/60/1	21.5	17.9	112.0	1	3.60	1/2	1	25.98	40	0.0	0.0
GEHE042	230/60/1	34.0	17.9	112.0	1	3.60	1/2	1	42.54	45	7.0	30.4
GEHE042	208/60/3	17.1	13.5	88.0	1	3.60	1/2	1	20.48	30	0.0	0.0
GEHE042	208/60/3	19.4	13.5	88.0	1	3.60	1/2	1	24.28	30	5.7	15.8
GEHE042	230/60/3	17.1	13.5	88.0	1	3.60	1/2	1	20.48	30	0.0	0.0
GEHE042	230/60/3	21.2	13.5	88.0	1	3.60	1/2	1	26.46	30	7.0	17.6
GEHE042	460/60/3	7.7	6.0	44.0	1	1.70	1/2	1	9.2	15	0.0	0.0
GEHE042	460/60/3	13.4	6.0	44.0	1	1.70	1/2	1	16.72	20	9.3	11.7
GEHE042	575/60/3	6.2	4.9	34.0	1	1.31	1/2	1	7.44	15	0.0	0.0
GEHE048	208/60/1	24.2	21.4	135.0	1	2.80	1/2	1	29.55	50	0.0	0.0

Table 201. Electrical data standard static motors (0.5 to 25 tons), single speed blower motor (6 to 25 tons) (continued)

Model No.	Volts	Total Unit FLA	Comp RLA (ea)	Comp LRA (ea)	No. of Comp.	Blower Motor FLA	Blower Motor hp	Fan Motor Num	Minimum Circuit Ampacity	Maximum Overcur-rent Protective Device	Electric Heat kW[a]	Electric Heat Amps[a]
GEHE048	208/60/1	34.1	21.4	135.0	1	2.80	1/2	1	42.56	50	6.5	31.3
GEHE048	230/60/1	24.2	21.4	135.0	1	2.80	1/2	1	29.55	50	0.0	0.0
GEHE048	230/60/1	37.6	21.4	135.0	1	2.80	1/2	1	46.98	50	8.0	34.8
GEHE048	208/60/3	17.3	14.5	98.0	1	2.80	1/2	1	20.93	35	0.0	0.0
GEHE048	208/60/3	20.8	14.5	98.0	1	2.80	1/2	1	26.05	35	6.5	18.0
GEHE048	230/60/3	17.3	14.5	98.0	1	2.80	1/2	1	20.93	35	0.0	0.0
GEHE048	230/60/3	22.9	14.5	98.0	1	2.80	1/2	1	28.6	35	8.0	20.1
GEHE048	460/60/3	7.7	6.3	55.0	1	1.40	1/2	1	9.28	15	0.0	0.0
GEHE048	460/60/3	14.7	6.3	55.0	1	1.40	1/2	1	18.38	20	10.6	13.3
GEHE048	575/60/3	7.4	6.0	41.0	1	1.40	1/2	1	8.9	15	0.0	0.0
GEHE060	208/60/1	31.7	26.3	134.0	1	5.40	1	1	38.28	60	0.0	0.0
GEHE060	208/60/1	36.7	26.3	134.0	1	5.40	1	1	45.81	60	6.5	31.3
GEHE060	230/60/1	31.7	26.3	134.0	1	5.40	1	1	38.28	60	0.0	0.0
GEHE060	230/60/1	40.2	26.3	134.0	1	5.40	1	1	50.23	60	8.0	34.8
GEHE060	208/60/3	21.0	15.6	110.0	1	5.40	1	1	24.9	40	0.0	0.0
GEHE060	208/60/3	23.4	15.6	110.0	1	5.40	1	1	29.3	40	6.5	18.0
GEHE060	230/60/3	21.0	15.6	110.0	1	5.40	1	1	24.9	40	0.0	0.0
GEHE060	230/60/3	25.5	15.6	110.0	1	5.40	1	1	31.85	40	8.0	20.1
GEHE060	460/60/3	10.5	7.8	52.0	1	2.70	1	1	12.45	20	0.0	0.0
GEHE060	460/60/3	16.0	7.8	52.0	1	2.70	1	1	20.01	25	10.6	13.3
GEHE060	575/60/3	8.0	5.8	38.9	1	2.20	1	1	9.45	15	0.0	0.0
GEHE072	208/60/1	39.9	16.7	79.0	2	6.50	1	1	44.08	60	—	—
GEHE072	230/60/1	39.9	16.7	79.0	2	6.50	1	1	44.08	60	—	—
GEHE072	208/60/1	42.7	16.7	79.0	2	9.30	1 1/2	1	46.88	60	—	—
GEHE072	230/60/1	42.3	16.7	79.0	2	8.90	1 1/2	1	46.48	60	—	—
GEHE072	208/60/1	44.6	16.7	79.0	2	11.20	2	1	48.78	60	—	—
GEHE072	230/60/1	43.6	16.7	79.0	2	10.20	2	1	47.78	60	—	—

Table 201. Electrical data standard static motors (0.5 to 25 tons), single speed blower motor (6 to 25 tons) (continued)

Model No.	Volts	Total Unit FLA	Comp RLA (ea)	Comp LRA (ea)	No. of Comp.	Blower Motor FLA	Blower Motor hp	Fan Motor Num	Minimum Circuit Ampacity	Maximum Overcur-rent Protective Device	Electric Heat kW[a]	Electric Heat Amps[a]
GEHE072	208/60/3	24.3	10.4	73.0	2	3.50	1	1	26.90	35	—	—
GEHE072	230/60/3	24.6	10.4	73.0	2	3.80	1	1	27.20	35	—	—
GEHE072	460/60/3	13.4	5.8	38.0	2	1.80	1	1	14.85	20	—	—
GEHE072	208/60/3	26.4	10.4	73.0	2	5.60	1 1/2	1	29.00	35	—	—
GEHE072	230/60/3	25.6	10.4	73.0	2	4.80	1 1/2	1	28.20	35	—	—
GEHE072	460/60/3	14.0	5.8	38.0	2	2.40	1 1/2	1	15.45	20	—	—
GEHE072	208/60/3	27.9	10.4	73.0	2	7.10	2	1	30.50	40	—	—
GEHE072	230/60/3	27.0	10.4	73.0	2	6.20	2	1	29.60	40	—	—
GEHE072	460/60/3	14.7	5.8	38.0	2	3.10	2	1	16.15	20	—	—
GEHE090	208/60/3	28.4	14.5/10.4	98.0/73.0	2	3.50	1	1	32.03	45	—	—
GEHE090	230/60/3	28.7	14.5/10.4	98.0/73.0	2	3.80	1	1	32.33	45	—	—
GEHE090	460/60/3	13.9	6.3/5.8	55.0/38.0	2	1.80	1	1	15.48	20	—	—
GEHE090	208/60/3	30.5	14.5/10.4	98.0/73.0	2	5.60	1 1/2	1	34.13	45	—	—
GEHE090	230/60/3	29.7	14.5/10.4	98.0/73.0	2	4.80	1 1/2	1	33.33	45	—	—
GEHE090	460/60/3	14.5	6.3/5.8	55.0/38.0	2	2.40	1 1/2	1	16.08	20	—	—
GEHE090	208/60/3	32.0	14.5/10.4	98.0/73.0	2	7.10	2	1	35.63	50	—	—
GEHE090	230/60/3	31.1	14.5/10.4	98.0/73.0	2	6.20	2	1	34.73	45	—	—
GEHE090	460/60/3	15.2	6.3/5.8	55.0/38.0	2	3.10	2	1	16.78	20	—	—
GEHE090	575/60/3	12.1	6.0/3.8	41.0/36.5	2	2.30	2	1	13.60	15	—	—
GEHE090	208/60/3	34.3	14.5/10.4	98.0/73.0	2	9.40	3	1	37.93	50	—	—
GEHE090	230/60/3	33.1	14.5/10.4	98.0/73.0	2	8.20	3	1	36.73	50	—	—
GEHE090	460/60/3	16.7	6.3	55.0/38.0	2	4.10	3	1	18.28	20	—	—
GEHE090	575/60/3	13.1	6.0/3.8	41.0/36.5	2	3.30	3	1	14.60	20	—	—

Table 201. Electrical data standard static motors (0.5 to 25 tons), single speed blower motor (6 to 25 tons) (continued)

Model No.	Volts	Total Unit FLA	Comp RLA (ea)	Comp LRA (ea)	No. of Comp.	Blower Motor FLA	Blower Motor hp	Fan Motor Num	Minimum Circuit Ampacity	Maximum Overcur-rent Protective Device	Electric Heat kW[a]	Electric Heat Amps[a]
GEHE120	208/60/3	37.6	16.0	110.0	2	5.60	1 1/2	1	41.60	50	—	—
GEHE120	230/60/3	36.8	16.0	110.0	2	4.80	1 1/2	1	40.80	50	—	—
GEHE120	460/60/3	18.0	7.8	52.0	2	2.40	1 1/2	1	19.95	25	—	—
GEHE120	208/60/3	39.1	16.0	110.0	2	7.10	2	1	43.10	50	—	—
GEHE120	230/60/3	38.2	16.0	110.0	2	6.20	2	1	42.20	50	—	—
GEHE120	460/60/3	18.7	7.8	52.0	2	3.10	2	1	20.65	25	—	—
GEHE120	575/60/3	13.7	5.7	38.9	2	2.30	2	1	15.13	20	—	—
GEHE120	208/60/3	41.4	16.0	110.0	2	9.40	3	1	45.40	60	—	—
GEHE120	230/60/3	40.2	16.0	110.0	2	8.20	3	1	44.20	60	—	—
GEHE120	460/60/3	19.7	7.8	52.0	2	4.10	3	1	21.65	25	—	—
GEHE120	575/60/3	14.7	5.7	38.9	2	3.30	3	1	16.13	20	—	—
GEHE120	208/60/3	46.0	16.0	110.0	2	14.00	5	1	50.00	60	—	—
GEHE120	230/60/3	45.0	16.0	110.0	2	13.00	5	1	49.00	60	—	—
GEHE120	460/60/3	22.1	7.8	52.0	2	6.50	5	1	24.05	30	—	—
GEHE120	575/60/3	16.7	5.7	38.9	2	5.30	5	1	18.13	20	—	—
GEHE150	208/60/3	50.4	22.4	149.0	2	5.60	1 1/2	1	56.00	70	—	—
GEHE150	230/60/3	49.6	22.4	149.0	2	4.80	1 1/2	1	55.20	70	—	—
GEHE150	460/60/3	23.6	10.6	75.0	2	2.40	1 1/2	1	26.25	35	—	—
GEHE150	575/60/3	17.3	7.7	54.0	2	1.90	1 1/2	1	19.23	25	—	—
GEHE150	208/60/3	51.9	22.4	149.0	2	7.10	2	1	57.50	70	—	—
GEHE150	230/60/3	51.0	22.4	149.0	2	6.20	2	1	56.60	70	—	—
GEHE150	460/60/3	24.3	10.6	75.0	2	3.10	2	1	26.96	35	—	—
GEHE150	575/60/3	17.7	7.7	54.0	2	2.30	2	1	19.63	25	—	—
GEHE150	208/60/3	54.2	22.4	149.0	2	9.40	3	1	59.80	80	—	—
GEHE150	230/60/3	53.0	22.4	149.0	2	8.20	3	1	58.60	80	—	—
GEHE150	460/60/3	25.3	10.6	75.0	2	4.10	3	1	27.95	35	—	—
GEHE150	575/60/3	18.7	7.7	54.0	2	3.30	3	1	20.63	25	—	—

Table 201. Electrical data standard static motors (0.5 to 25 tons), single speed blower motor (6 to 25 tons) (continued)

Model No.	Volts	Total Unit FLA	Comp RLA (ea)	Comp LRA (ea)	No. of Comp.	Blower Motor FLA	Blower Motor hp	Fan Motor Num	Minimum Circuit Ampacity	Maximum Overcur-rent Protective Device	Electric Heat kW[a]	Electric Heat Amps[a]
GEHE150	208/60/3	58.8	22.4	149.0	2	14.00	5	1	64.40	80	—	—
GEHE150	230/60/3	57.8	22.4	149.0	2	13.00	5	1	63.40	80	—	—
GEHE150	460/60/3	27.7	10.6	75.0	2	6.50	5	1	30.35	40	—	—
GEHE150	575/60/3	20.7	7.7	54.0	2	5.30	5	1	22.63	30	—	—
GEHE180	208/60/3	57.1	25.0	164.0	2	7.10	2	1	63.35	80	—	—
GEHE180	230/60/3	56.2	25.0	164.0	2	6.20	2	1	62.45	80	—	—
GEHE180	460/60/3	27.5	12.2	100.0	2	3.10	2	1	30.56	40	—	—
GEHE180	575/60/3	20.3	9.0	78.0	2	2.30	2	1	22.55	30	—	—
GEHE180	208/60/3	59.4	25.0	164.0	2	9.40	3	1	65.65	90	—	—
GEHE180	230/60/3	58.2	25.0	164.0	2	8.20	3	1	64.45	80	—	—
GEHE180	460/60/3	28.5	12.2	100.0	2	4.10	3	1	31.55	40	—	—
GEHE180	575/60/3	21.3	9.0	78.0	2	3.30	3	1	23.55	30	—	—
GEHE180	208/60/3	64.0	25.0	164.0	2	14.00	5	1	70.25	90	—	—
GEHE180	230/60/3	63.0	25.0	164.0	2	13.00	5	1	69.25	90	—	—
GEHE180	460/60/3	30.9	12.2	100.0	2	6.50	5	1	33.95	45	—	—
GEHE180	575/60/3	23.3	9.0	78.0	2	5.30	5	1	25.55	30	—	—
GEHE180	208/60/3	70.0	25.0	164.0	2	20.00	7 1/2	1	76.25	100	—	—
GEHE180	230/60/3	69.4	25.0	164.0	2	19.40	7 1/2	1	75.65	100	—	—
GEHE180	460/60/3	34.1	12.2	100.0	2	9.70	7 1/2	1	37.15	45	—	—
GEHE180	575/60/3	26.0	9.0	78.0	2	8.00	7 1/2	1	28.25	35	—	—
GEVE072	208/60/1	40.0	16.7	79.0	2	6.60	1	1	44.13	60	—	—
GEVE072	230/60/1	39.9	16.7	79.0	2	6.50	1	1	44.08	60	—	—
GEVE072	208/60/1	42.7	16.7	79.0	2	9.30	1 1/2	1	46.88	60	—	—
GEVE072	230/60/1	42.3	16.7	79.0	2	8.90	1 1/2	1	46.48	60	—	—
GEVE072	208/60/1	44.6	16.7	79.0	2	11.20	2	1	48.78	60	—	—
GEVE072	230/60/1	43.6	16.7	79.0	2	10.20	2	1	47.81	60	—	—
GEVE072	208/60/3	24.3	10.4	73.0	2	3.50	1	1	26.90	35	—	—

Table 201. Electrical data standard static motors (0.5 to 25 tons), single speed blower motor (6 to 25 tons) (continued)

Model No.	Volts	Total Unit FLA	Comp RLA (ea)	Comp LRA (ea)	No. of Comp.	Blower Motor FLA	Blower Motor hp	Fan Motor Num	Minimum Circuit Ampacity	Maximum Overcur-rent Protective Device	Electric Heat kW[a]	Electric Heat Amps[a]
GEVE072	230/60/3	24.6	10.4	73.0	2	3.80	1	1	27.20	35	—	—
GEVE072	460/60/3	13.4	5.8	38.0	2	1.80	1	1	14.85	20	—	—
GEVE072	208/60/3	26.4	10.4	73.0	2	5.60	1 1/2	1	29.00	35	—	—
GEVE072	230/60/3	25.6	10.4	73.0	2	4.80	1 1/2	1	28.20	35	—	—
GEVE072	460/60/3	14.0	5.8	38.0	2	2.40	1 1/2	1	15.45	20	—	—
GEVE072	208/60/3	27.9	10.4	73.0	2	7.10	2	1	30.50	40	—	—
GEVE072	230/60/3	27.0	10.4	73.0	2	6.20	2	1	29.60	40	—	—
GEVE072	460/60/3	14.7	5.8	38.0	2	3.10	2	1	16.16	20	—	—
GEVE090	208/60/3	28.4	14.5/10.4	98.0/73.0	2	3.50	1	1	32.03	45	—	—
GEVE090	230/60/3	28.7	14.5/10.4	98.0/73.0	2	3.80	1	1	32.33	45	—	—
GEVE090	460/60/3	13.9	6.3/5.8	55.0/38.0	2	1.80	1	1	15.48	20	—	—
GEVE090	208/60/3	30.5	14.5/10.4	98.0/73.0	2	5.60	1 1/2	1	34.13	45	—	—
GEVE090	230/60/3	29.7	14.5/10.4	98.0/73.0	2	4.80	1 1/2	1	33.33	45	—	—
GEVE090	460/60/3	14.5	6.3/5.8	55.0/38.0	2	2.40	1 1/2	1	16.08	20	—	—
GEVE090	208/60/3	32.0	14.5/10.4	98.0/73.0	2	7.10	2	1	35.63	50	—	—
GEVE090	230/60/3	31.1	14.5/10.4	98.0/73.0	2	6.20	2	1	34.73	45	—	—
GEVE090	460/60/3	15.2	6.3/5.8	55.0/38.0	2	3.10	2	1	16.79	20	—	—
GEVE090	575/60/3	12.1	6.0/3.8	41.0/36.5	2	2.30	2	1	13.60	15	—	—
GEVE090	208/60/3	34.3	14.5/10.4	98.0/73.0	2	9.40	3	1	37.93	50	—	—
GEVE090	230/60/3	33.1	14.5/10.4	98.0/73.0	2	8.20	3	1	36.73	50	—	—
GEVE090	460/60/3	16.2	6.3/5.8	55.0/38.0	2	4.10	3	1	17.78	20	—	—
GEVE090	575/60/3	13.1	6.0/3.8	41.0/36.5	2	3.30	3	1	14.60	20	—	—
GEVE120	208/60/3	37.6	16	110	2	5.60	1 1/2	1	41.60	50	—	—

Table 201. Electrical data standard static motors (0.5 to 25 tons), single speed blower motor (6 to 25 tons) (continued)

Model No.	Volts	Total Unit FLA	Comp RLA (ea)	Comp LRA (ea)	No. of Comp.	Blower Motor FLA	Blower Motor hp	Fan Motor Num	Minimum Circuit Ampacity	Maximum Overcur-rent Protective Device	Electric Heat kW[a]	Electric Heat Amps[a]
GEVE120	230/60/3	36.8	16	110	2	4.80	1 1/2	1	40.80	50	—	—
GEVE120	460/60/3	18.0	7.8	52	2	2.40	1 1/2	1	19.95	25	—	—
GEVE120	208/60/3	39.1	16	110	2	7.10	2	1	43.10	50	—	—
GEVE120	230/60/3	38.2	16	110	2	6.20	2	1	42.20	50	—	—
GEVE120	460/60/3	18.7	7.8	52	2	3.10	2	1	20.66	25	—	—
GEVE120	575/60/3	13.7	5.7	38.9	2	2.30	2	1	15.13	20	—	—
GEVE120	208/60/3	41.4	16	110	2	9.40	3	1	45.40	60	—	—
GEVE120	230/60/3	40.2	16	110	2	8.20	3	1	44.20	60	—	—
GEVE120	460/60/3	19.7	7.8	52	2	4.10	3	1	21.65	25	—	—
GEVE120	575/60/3	14.7	5.7	38.9	2	3.30	3	1	16.13	20	—	—
GEVE120	208/60/3	46.0	16	110	2	14.00	5	1	50.00	60	—	—
GEVE120	230/60/3	45.0	16	110	2	13.00	5	1	49.00	60	—	—
GEVE120	460/60/3	22.1	7.8	52	2	6.50	5	1	24.05	30	—	—
GEVE120	575/60/3	16.7	5.7	38.9	2	5.30	5	1	18.13	20	—	—
GEVE150	208/60/3	51.9	22.4	149	2	7.10	2	1	57.50	70	—	—
GEVE150	230/60/3	51.0	22.4	149	2	6.20	2	1	56.60	70	—	—
GEVE150	460/60/3	24.3	10.6	75	2	3.10	2	1	26.96	35	—	—
GEVE150	575/60/3	17.7	7.7	54	2	2.30	2	1	19.63	25	—	—
GEVE150	208/60/3	54.2	22.4	149	2	9.40	3	1	59.80	80	—	—
GEVE150	230/60/3	53.0	22.4	149	2	8.20	3	1	58.60	80	—	—
GEVE150	460/60/3	25.3	10.6	75	2	4.10	3	1	27.95	35	—	—
GEVE150	575/60/3	18.7	7.7	54	2	3.30	3	1	20.63	25	—	—
GEVE150	208/60/3	58.8	22.4	149	2	14.00	5	1	64.40	80	—	—
GEVE150	230/60/3	57.8	22.4	149	2	13.00	5	1	63.40	80	—	—
GEVE150	460/60/3	27.7	10.6	75	2	6.50	5	1	30.35	40	—	—
GEVE150	575/60/3	20.7	7.7	54	2	5.30	5	1	22.63	30	—	—
GEVE180	208/60/3	59.4	25	164	2	9.40	3	1	65.65	90	—	—

Table 201. Electrical data standard static motors (0.5 to 25 tons), single speed blower motor (6 to 25 tons) (continued)

Model No.	Volts	Total Unit FLA	Comp RLA (ea)	Comp LRA (ea)	No. of Comp.	Blower Motor FLA	Blower Motor hp	Fan Motor Num	Minimum Circuit Ampacity	Maximum Overcur-rent Protective Device	Electric Heat kW[a]	Electric Heat Amps[a]
GEVE180	230/60/3	58.2	25	164	2	8.20	3	1	64.45	80	—	—
GEVE180	460/60/3	28.5	12.2	100	2	4.10	3	1	31.55	40	—	—
GEVE180	575/60/3	21.3	9	78	2	3.30	3	1	23.55	30	—	—
GEVE180	208/60/3	64.0	25	164	2	14.00	5	1	70.25	90	—	—
GEVE180	230/60/3	63.0	25	164	2	13.00	5	1	69.25	90	—	—
GEVE180	460/60/3	30.9	12.2	100	2	6.50	5	1	33.95	45	—	—
GEVE180	575/60/3	23.3	9	78	2	5.30	5	1	25.55	30	—	—
GEVE180	208/60/3	70.0	25	164	2	20.00	7 1/2	1	76.25	100	—	—
GEVE180	230/60/3	69.4	25	164	2	19.40	7 1/2	1	75.65	100	—	—
GEVE180	460/60/3	34.1	12.2	100	2	9.70	7 1/2	1	37.15	45	—	—
GEVE180	575/60/3	26.0	9	78	2	8.00	7 1/2	1	28.25	35	—	—
GEVE240	208/60/3	74.2	30.1	225	2	14.00	5	1	81.73	110	—	—
GEVE240	230/60/3	73.2	30.1	225	2	13.00	5	1	80.73	110	—	—
GEVE240	460/60/3	39.9	16.7	114	2	6.50	5	1	44.08	60	—	—
GEVE240	575/60/3	29.7	12.2	80	2	5.30	5	1	32.75	40	—	—
GEVE240	208/60/3	80.2	30.1	225	2	20.00	7 1/2	1	87.73	110	—	—
GEVE240	230/60/3	79.6	30.1	225	2	19.40	7 1/2	1	87.13	110	—	—
GEVE240	460/60/3	43.1	16.7	114	2	9.70	7 1/2	1	47.28	60	—	—
GEVE240	575/60/3	32.4	12.2	80	2	8.00	7 1/2	1	35.45	45	—	—
GEVE240	208/60/3	86.2	30.1	225	2	26.00	10	1	93.73	110	—	—
GEVE240	230/60/3	85.2	30.1	225	2	25.00	10	1	92.73	110	—	—
GEVE240	460/60/3	45.9	16.7	114	2	12.50	10	1	50.08	60	—	—
GEVE240	575/60/3	34.4	12.2	80	2	10.00	10	1	37.45	45	—	—
GEVE240	208/60/3	97.2	30.1	225	2	37.00	15	1	106.45	125	—	—
GEVE240	230/60/3	96.2	30.1	225	2	36.00	15	1	105.20	125	—	—
GEVE240	460/60/3	51.4	16.7	114	2	18.00	15	1	55.90	70	—	—
GEVE240	575/60/3	38.5	12.2	80	2	14.10	15	1	42.03	50	—	—

Table 201. Electrical data standard static motors (0.5 to 25 tons), single speed blower motor (6 to 25 tons) (continued)

Model No.	Volts	Total Unit FLA	Comp RLA (ea)	Comp LRA (ea)	No. of Comp.	Blower Motor FLA	Blower Motor hp	Fan Motor Num	Minimum Circuit Ampacity	Maximum Overcur-rent Protective Device	Electric Heat kW[a]	Electric Heat Amps[a]
GEVE300	208/60/3	110.2	48.1	245	2	14.00	5	1	122.23	150	—	—
GEVE300	230/60/3	109.2	48.1	245	2	13.00	5	1	121.23	150	—	—
GEVE300	460/60/3	43.7	18.6	125	2	6.50	5	1	48.35	60	—	—
GEVE300	575/60/3	34.7	14.7	100	2	5.30	5	1	38.38	50	—	—
GEVE300	208/60/3	116.2	48.1	245	2	20.00	7 1/2	1	128.23	175	—	—
GEVE300	230/60/3	115.6	48.1	245	2	19.40	7 1/2	1	127.63	175	—	—
GEVE300	460/60/3	46.9	18.6	125	2	9.70	7 1/2	1	51.55	70	—	—
GEVE300	575/60/3	37.4	14.7	100	2	8.00	7 1/2	1	41.08	50	—	—
GEVE300	208/60/3	122.2	48.1	245	2	26.00	10	1	134.23	175	—	—
GEVE300	230/60/3	121.2	48.1	245	2	25.00	10	1	133.23	175	—	—
GEVE300	460/60/3	49.7	18.6	125	2	12.50	10	1	54.35	70	—	—
GEVE300	575/60/3	39.4	14.7	100	2	10.00	10	1	43.08	50	—	—
GEVE300	208/60/3	133.2	48.1	245	2	37.00	15	1	145.23	175	—	—
GEVE300	230/60/3	132.2	48.1	245	2	36.00	15	1	144.23	175	—	—
GEVE300	460/60/3	55.2	18.6	125	2	18.00	15	1	59.85	70	—	—
GEVE300	575/60/3	43.5	14.7	100	2	14.10	15	1	47.18	60	—	—

Table 202. Electrical data high static motors 0.5 to 5 tons

Model No.	Volts	Total Unit FLA	Comp RLA (ea)	Comp LRA (ea)	No. of Comp.	Blower Motor FLA	Blower Motor hp	Fan Motor Num	Minimum Circuit Ampacity	Maximum Overcur-rent Protective Device	Electric Heat kW	Electric Heat Amps
GEHE006	115/60/1	6.8	5.6	30	1	1.20	1/12	1	8.20	15	0.0	0.0
GEHE006	208/60/1	3.9	3.3	14	1	0.60	1/12	1	4.73	15	0.0	0.0
GEHE006	208/60/1	4.5	3.3	14	1	0.60	1/12	1	5.68	15	0.8	3.9
GEHE006	230/60/1	3.8	3.2	15	1	0.60	1/12	1	4.60	15	0.0	0.0
GEHE006	230/60/1	4.9	3.2	15	1	0.60	1/12	1	6.18	15	1.0	4.3
GEHE006	265/60/1	3.0	2.5	11	1	0.52	1/12	1	3.65	15	0.0	0.0
GEHE006	265/60/1	5.5	2.5	11	1	0.52	1/12	1	6.92	15	1.3	5.0
GEHE009	115/60/1	7.6	6.4	36	1	1.20	1/12	1	9.20	15	0.0	0.0
GEHE009	208/60/1	4.3	3.7	16	1	0.60	1/12	1	5.23	15	0.0	0.0
GEHE009	208/60/1	6.5	3.7	16	1	0.60	1/12	1	8.14	15	1.2	5.9
GEHE009	230/60/1	4.1	3.5	17	1	0.60	1/12	1	4.98	15	0.0	0.0
GEHE009	230/60/1	7.1	3.5	17	1	0.60	1/12	1	8.90	15	1.5	6.5
GEHE009	265/60/1	3.3	2.8	13	1	0.52	1/12	1	4.02	15	0.0	0.0
GEHE009	265/60/1	8.1	2.8	13	1	0.52	1/12	1	10.08	15	2.0	7.5
GEHE012	115/60/1	13.7	12.1	58	1	1.57	1/8	1	16.70	25	0.0	0.0
GEHE012	208/60/1	7.0	6.3	30	1	0.70	1/8	1	8.58	15	0.0	0.0
GEHE012	208/60/1	8.5	6.3	27	1	0.70	1/8	1	10.67	15	1.6	7.8
GEHE012	230/60/1	7.0	6.3	30	1	0.70	1/8	1	8.58	15	0.0	0.0
GEHE012	230/60/1	9.4	6.3	30	1	0.70	1/8	1	11.74	15	2.0	8.7
GEHE012	265/60/1	5.7	5	23	1	0.72	1/8	1	6.97	15	0.0	0.0
GEHE012	265/60/1	10.7	5	23	1	0.72	1/8	1	13.40	15	2.7	10.0
GEHE015	208/60/1	8.6	7.9	36	1	0.70	1/8	1	10.58	15	0.0	0.0
GEHE015	208/60/1	10.3	7.9	36	1	0.70	1/8	1	12.89	15	2.0	9.6
GEHE015	230/60/1	8.6	7.9	36	1	0.70	1/8	1	10.58	15	0.0	0.0
GEHE015	230/60/1	11.6	7.9	36	1	0.70	1/8	1	14.46	15	2.5	10.9
GEHE015	265/60/1	7.1	6.4	30	1	0.72	1/8	1	8.72	15	0.0	0.0
GEHE015	265/60/1	13.2	6.4	30	1	0.72	1/8	1	16.47	20	3.3	12.5

Table 202. Electrical data high static motors 0.5 to 5 tons (continued)

Model No.	Volts	Total Unit FLA	Comp RLA (ea)	Comp LRA (ea)	No. of Comp.	Blower Motor FLA	Blower Motor hp	Fan Motor Num	Minimum Circuit Ampacity	Maximum Overcur-rent Protective Device	Electric Heat kW	Electric Heat Amps
GEHE018	208/60/1	11.7	9.6	42	1	2.10	1/3	1	14.10	20	0.0	0.0
GEHE018	208/60/1	13.9	9.6	42	1	2.10	1/3	1	17.41	20	2.5	11.8
GEHE018	230/60/1	11.7	9.6	42	1	2.10	1/3	1	14.10	20	0.0	0.0
GEHE018	230/60/1	15.1	9.6	42	1	2.10	1/3	1	18.93	20	3.0	13.0
GEHE018	265/60/1	9.2	7.7	35	1	1.53	1/3	1	11.16	15	0.0	0.0
GEHE018	265/60/1	16.6	7.7	35	1	1.53	1/3	1	20.78	25	4.0	15.1
GEHE024	208/60/1	14.9	12.8	58.3	1	2.10	1/3	1	18.10	30	0.0	0.0
GEHE024	208/60/1	17.8	12.8	58.3	1	2.10	1/3	1	22.22	30	3.3	15.7
GEHE024	230/60/1	14.9	12.8	58.3	1	2.10	1/3	1	18.10	30	0.0	0.0
GEHE024	230/60/1	19.5	12.8	58.3	1	2.10	1/3	1	24.36	30	4.0	17.4
GEHE024	265/60/1	11.1	9.6	54	1	1.53	1/3	1	13.53	20	0.0	0.0
GEHE024	265/60/1	21.5	9.6	54	1	1.53	1/3	1	26.91	30	5.3	20.0
GEHE024	208/60/3	9.2	7.7	53.7	1	1.53	1/3	1	11.16	15	0.0	0.0
GEHE024	208/60/3	10.6	7.7	53.7	1	1.53	1/3	1	13.22	15	3.3	9.0
GEHE024	230/60/3	9.8	7.7	53.7	1	2.10	1/3	1	11.73	15	0.0	0.0
GEHE024	230/60/3	12.1	7.7	53.7	1	2.10	1/3	1	15.18	20	4.0	10.0
GEHE024	460/60/3	4.6	3.6	28	1	0.95	1/3	1	5.45	15	0.0	0.0
GEHE024	460/60/3	7.6	3.6	28	1	0.95	1/3	1	9.50	15	5.3	6.7
GEHE030	208/60/1	16.2	14.1	73	1	2.10	1/3	1	19.73	30	0.0	0.0
GEHE030	208/60/1	21.8	14.1	73	1	2.10	1/3	1	27.26	30	4.1	19.7
GEHE030	230/60/1	16.2	14.1	73	1	2.10	1/3	1	19.73	30	0.0	0.0
GEHE030	230/60/1	23.8	14.1	73	1	2.10	1/3	1	29.80	30	5.0	21.7
GEHE030	265/60/1	12.7	11.2	60	1	1.53	1/3	1	15.53	25	0.0	0.0
GEHE030	265/60/1	26.4	11.2	60	1	1.53	1/3	1	33.04	35	6.6	24.9
GEHE030	208/60/3	11.0	8.9	58	1	2.10	1/3	1	13.23	20	0.0	0.0
GEHE030	208/60/3	13.5	8.9	58	1	2.10	1/3	1	16.85	20	4.1	11.4
GEHE030	230/60/3	11.0	8.9	58	1	2.10	1/3	1	13.23	20	0.0	0.0

Table 202. Electrical data high static motors 0.5 to 5 tons (continued)

Model No.	Volts	Total Unit FLA	Comp RLA (ea)	Comp LRA (ea)	No. of Comp.	Blower Motor FLA	Blower Motor hp	Fan Motor Num	Minimum Circuit Ampacity	Maximum Overcur-rent Protective Device	Electric Heat kW	Electric Heat Amps
GEHE030	230/60/3	14.7	8.9	58	1	2.10	1/3	1	18.31	20	5.0	12.6
GEHE030	460/60/3	5.2	4.2	28	1	0.95	1/3	1	6.20	15	0.0	0.0
GEHE030	460/60/3	9.2	4.2	28	1	0.95	1/3	1	11.54	15	6.6	8.3
GEHE035	208/60/1	17.7	14.1	77	1	3.60	1/2	1	21.23	35	0.0	0.0
GEHE035	208/60/1	27.2	14.1	77	1	3.60	1/2	1	33.95	35	4.9	23.6
GEHE035	230/60/1	17.7	14.1	77	1	3.60	1/2	1	21.23	35	0.0	0.0
GEHE035	230/60/1	29.7	14.1	77	1	3.60	1/2	1	37.11	40	6.0	26.1
GEHE035	265/60/1	15.0	12.2	72	1	2.77	1/2	1	18.02	30	0.0	0.0
GEHE035	265/60/1	32.8	12.2	72	1	2.77	1/2	1	40.96	45	8.0	30.0
GEHE035	208/60/3	12.6	9	71	1	3.60	1/2	1	14.85	20	0.0	0.0
GEHE035	208/60/3	17.2	9	71	1	3.60	1/2	1	21.50	25	4.9	13.6
GEHE035	230/60/3	12.6	9	71	1	3.60	1/2	1	14.85	20	0.0	0.0
GEHE035	230/60/3	18.7	9	71	1	3.60	1/2	1	23.33	25	6.0	15.1
GEHE035	460/60/3	7.3	5.6	38	1	1.70	1/2	1	8.70	15	0.0	0.0
GEHE035	460/60/3	11.7	5.6	38	1	1.70	1/2	1	14.60	15	8.0	10.0
GEHE042	208/60/1	21.5	17.9	112	1	3.60	1/2	1	25.98	40	0.0	0.0
GEHE042	208/60/1	31.0	17.9	112	1	3.60	1/2	1	38.75	40	5.7	27.4
GEHE042	230/60/1	21.5	17.9	112	1	3.60	1/2	1	25.98	40	0.0	0.0
GEHE042	230/60/1	34.0	17.9	112	1	3.60	1/2	1	42.54	45	7.0	30.4
GEHE042	208/60/3	17.1	13.5	88	1	3.60	1/2	1	20.48	30	0.0	0.0
GEHE042	208/60/3	19.4	13.5	88	1	3.60	1/2	1	24.28	30	5.7	15.8
GEHE042	230/60/3	17.1	13.5	88	1	3.60	1/2	1	20.48	30	0.0	0.0
GEHE042	230/60/3	21.2	13.5	88	1	3.60	1/2	1	26.46	30	7.0	17.6
GEHE042	460/60/3	7.7	6	44	1	1.70	1/2	1	9.20	15	0.0	0.0
GEHE042	460/60/3	13.4	6	44	1	1.70	1/2	1	16.72	20	9.3	11.7
GEHE042	575/60/3	6.2	4.9	34	1	1.31	1/2	1	7.44	15	0.0	0.0
GEHE048	208/60/1	26.8	21.4	135	1	5.40	1	1	32.15	50	0.0	0.0

Table 202. Electrical data high static motors 0.5 to 5 tons (continued)

Model No.	Volts	Total Unit FLA	Comp RLA (ea)	Comp LRA (ea)	No. of Comp.	Blower Motor FLA	Blower Motor hp	Fan Motor Num	Minimum Circuit Ampacity	Maximum Overcur-rent Protective Device	Electric Heat kW	Electric Heat Amps
GEHE048	208/60/1	36.7	21.4	135	1	5.40	1	1	45.81	50	6.5	31.3
GEHE048	230/60/1	26.8	21.4	135	1	5.40	1	1	32.15	50	0.0	0.0
GEHE048	230/60/1	40.2	21.4	135	1	5.40	1	1	50.23	60	8.0	34.8
GEHE048	208/60/3	19.9	14.5	98	1	5.40	1	1	23.53	35	0.0	0.0
GEHE048	208/60/3	23.4	14.5	98	1	5.40	1	1	29.30	35	6.5	18.0
GEHE048	230/60/3	19.9	14.5	98	1	5.40	1	1	23.53	35	0.0	0.0
GEHE048	230/60/3	25.5	14.5	98	1	5.40	1	1	31.85	35	8.0	20.1
GEHE048	460/60/3	9.0	6.3	55	1	2.70	1	1	10.58	15	0.0	0.0
GEHE048	460/60/3	16.0	6.3	55	1	2.70	1	1	20.01	25	10.6	13.3
GEHE048	575/60/3	8.2	6	41	1	2.20	1	1	9.70	15	0.0	0.0
GEHE060	208/60/1	31.7	26.3	134	1	5.40	1	1	38.28	60	0.0	0.0
GEHE060	208/60/1	36.7	26.3	134	1	5.40	1	1	45.81	60	6.5	31.3
GEHE060	230/60/1	31.7	26.3	134	1	5.40	1	1	38.28	60	0.0	0.0
GEHE060	230/60/1	40.2	26.3	134	1	5.40	1	1	50.23	60	8.0	34.8
GEHE060	208/60/3	21.0	15.6	110	1	5.40	1	1	24.90	40	0.0	0.0
GEHE060	208/60/3	23.4	15.6	110	1	5.40	1	1	29.30	40	6.5	18.0
GEHE060	230/60/3	21.0	15.6	110	1	5.40	1	1	24.90	40	0.0	0.0
GEHE060	230/60/3	25.5	15.6	110	1	5.40	1	1	31.85	40	8.0	20.1
GEHE060	460/60/3	10.5	7.8	52	1	2.70	1	1	12.45	20	0.0	0.0
GEHE060	460/60/3	16.0	7.8	52	1	2.70	1	1	20.01	25	10.6	13.3
GEHE060	575/60/3	8.0	5.8	38.9	1	2.20	1	1	9.45	15	0.0	0.0

Table 203. Electrical data - ECM motors - 0.5 to 5 tons GEV

Model No.	Unit Volts	Total Unit FLA	Comp RLA (ea)	Comp LRA (ea)	Blower Motor FLA	Blower Motor HP	Minimum Circuit Ampacity	Maximum Overcur-rent Protective Device	Electric Heat Kw	Electric Heat Amps
GEVG006	208-230/60/1	3.9	3.6	27.0	0.3	1/3	5/5	15/15	0.0	0.0
GEVG006	265/60/1	3.3	3.0	22.0	0.3	1/3	5	15	0.0	0.0
GEVG009	208-230/60/1	4.7	4.0	27.0	0.7	1/3	6/6	15/15	0.0	0.0
GEVG009	265/60/1	3.9	3.3	22.0	0.6	1/3	5	15	0.0	0.0
GEVG012	208-230/60/1	6.6	5.7	27.0	0.9	1/3	9/9	15/15	0.0	0.0
GEVG012	265/60/1	5.3	4.5	32.0	0.8	1/3	7	15	0.0	0.0
GEVG015	208-230/60/1	8.2	7.3	36.0	0.9	1/3	10/10	15/15	0.0	0.0
GEVG015	265/60/1	5.6	4.8	30.0	0.8	1/3	7	15	0.0	0.0
GEVG018	208-230/60/1	9.7	8.5	38.0	1.2	1/3	12/12	20/20	0.0	0.0
GEVG018	265/60/1	7.8	6.8	35.0	1.0	1/3	10	15	0.0	0.0
GEVG024	208-230/60/1	15.2	13.5	58.3	1.7	1/2	19/19	30/30	0.0	0.0
GEVG024	265/60/1	10.4	9.0	54.0	1.4	1/2	13	20	0.0	0.0
GEVG024	208-230/60/3	8.8	7.1	55.4	1.7	1/2	11/11	15/15	0.0	0.0
GEVG024	460/60/3	4.3	3.5	28.0	0.8	1/2	6	15	0.0	0.0
GEVG030	208-230/60/1	15.9	14.1	73.0	1.8	3/4	20/20	30/30	0.0	0.0
GEVG030	208-230/60/3	10.7	8.9	58.0	1.8	3/4	13/13	20/20	0.0	0.0
GEVG030	265/60/1	12.8	11.2	60.0	1.6	3/4	16	25	0.0	0.0
GEVG030	460/60/3	5.1	4.2	28.0	0.9	3/4	7	15	0.0	0.0
GEVG036	208-230/60/1	19.3	16.7	79.0	2.7	3/4	24/24	40/40	0.0	0.0
GEVG036	265/60/1	15.8	13.5	72.0	2.3	3/4	20	30	0.0	0.0
GEVG036	208-230/60/3	13.1	10.4	73.0	2.7	3/4	16/16	25/25	0.0	0.0
GEVG036	460/60/3	7.1	5.8	38.0	1.3	3/4	9	15	0.0	0.0
GEVG042	208-230/60/1	21.2	17.9	112.0	3.3	3/4	26/26	40/40	0.0	0.0
GEVG042	208-230/60/3	16.8	13.5	88.0	3.3	3/4	21/21	30/30	0.0	0.0
GEVG042	460/60/3	7.6	6.0	44.0	1.6	1	10	15	0.0	0.0
GEVG048	208-230/60/1	25.3	21.4	135.0	4.0	1	31/31	50/50	0.0	0.0
GEVG048	208-230/60/3	18.5	14.5	98.0	4.0	1	23/23	35/35	0.0	0.0

Table 203. Electrical data - ECM motors - 0.5 to 5 tons GEV (continued)

Model No.	Unit Volts	Total Unit FLA	Comp RLA (ea)	Comp LRA (ea)	Blower Motor FLA	Blower Motor HP	Minimum Circuit Ampacity	Maximum Overcur-rent Protective Device	Electric Heat Kw	Electric Heat Amps
GEVG048	460/60/3	8.3	6.3	55.0	2.0	1	10	15	0.0	0.0
GEVG060	208-230/60/1	31.3	26.4	134.0	4.9	1	38/38	60/60	0.0	0.0
GEVG060	208-230/60/3	20.9	16.0	110.0	4.9	1	25/25	40/40	0.0	0.0
GEVG060	460/60/3	10.3	7.8	52.0	2.5	1	13	20	0.0	0.0

Table 204. Electrical data two speed blower motor 6 to 25 tons

Model	Volts	Total Unit FLA	Comp RLA (ea)	Comp LRA (ea)	No. of Comp	Blower Motor FLA	Blower Motor HP	Fan Motors No.	Minimum Circuit Ampacity	Maximum Overcurrent Protection
GEHE072	208/60/3	24.1	10.4	73	2	3.3	1	1	26.70	35
GEHE072	230/60/3	23.8	10.4	73	2	3.0	1	1	26.40	35
GEHE072	460/60/3	13.1	5.8	38	2	1.5	1	1	14.55	20
GEHE072	208/60/3	25.7	10.4	73	2	4.9	1 1/2	1	28.30	35
GEHE072	230/60/3	25.2	10.4	73	2	4.4	1 1/2	1	27.80	35
GEHE072	460/60/3	13.8	5.8	38	2	2.2	1 1/2	1	15.25	20
GEHE072	208/60/3	27.5	10.4	73	2	6.7	2	1	30.10	40
GEHE072	230/60/3	26.9	10.4	73	2	6.1	2	1	29.50	35
GEHE072	460/60/3	14.7	5.8	38	2	3.1	2	1	16.15	20
GEHE090	208/60/3	28.2	14.5/10.4	98/73	2	3.3	1	1	31.83	45
GEHE090	230/60/3	27.9	14.5/10.4	98/73	2	3.0	1	1	31.53	45
GEHE090	460/60/3	13.6	6.3/5.8	55/38	2	1.5	1	1	15.18	20
GEHE090	208/60/3	29.8	14.5/10.4	98/73	2	4.9	1 1/2	1	33.43	45
GEHE090	230/60/3	29.3	14.5/10.4	98/73	2	4.4	1 1/2	1	32.93	45
GEHE090	460/60/3	14.3	6.3/5.8	55/38	2	2.2	1 1/2	1	15.88	20
GEHE090	208/60/3	31.6	14.5/10.4	98/73	2	6.7	2	1	35.23	45
GEHE090	230/60/3	31.0	14.5/10.4	98/73	2	6.1	2	1	34.63	45
GEHE090	460/60/3	15.2	6.3/5.8	55/38	2	3.1	2	1	16.78	20
GEHE090	208/60/3	33.7	14.5/10.4	98/73	2	8.8	3	1	37.33	50
GEHE090	230/60/3	32.9	14.5/10.4	98/73	2	8.0	3	1	36.53	50
GEHE090	460/60/3	16.6	6.3	55	2	4.0	3	1	18.18	20
GEHE120	208/60/3	36.9	16.0	110	2	4.9	1 1/2	1	40.90	50
GEHE120	230/60/3	36.4	16.0	110	2	4.4	1 1/2	1	40.40	50
GEHE120	460/60/3	17.8	7.8	52	2	2.2	1 1/2	1	19.75	25
GEHE120	208/60/3	38.7	16.0	110	2	6.7	2	1	42.70	50
GEHE120	230/60/3	38.1	16.0	110	2	6.1	2	1	42.10	50
GEHE120	460/60/3	18.7	7.8	52	2	3.1	2	1	20.65	25
GEHE120	208/60/3	40.8	16.0	110	2	8.8	3	1	44.80	60
GEHE120	230/60/3	40.0	16.0	110	2	8.0	3	1	44.00	60
GEHE120	460/60/3	19.6	7.8	52	2	4.0	3	1	21.55	25

Table 204. Electrical data two speed blower motor 6 to 25 tons (continued)

Model	Volts	Total Unit FLA	Comp RLA (ea)	Comp LRA (ea)	No. of Comp	Blower Motor FLA	Blower Motor HP	Fan Motors No.	Minimum Circuit Ampacity	Maximum Overcurrent Protection
GEHE120	208/60/3	46.6	16.0	110	2	14.6	5	1	50.60	60
GEHE120	230/60/3	45.2	16.0	110	2	13.2	5	1	49.20	60
GEHE120	460/60/3	22.2	7.8	52	2	6.6	5	1	24.15	30
GEHE150	208/60/3	49.7	22.4	149	2	4.9	1 1/2	1	55.30	70
GEHE150	230/60/3	49.2	22.4	149	2	4.4	1 1/2	1	54.80	70
GEHE150	460/60/3	23.4	10.6	75	2	2.2	1 1/2	1	26.05	35
GEHE150	208/60/3	51.5	22.4	149	2	6.7	2	1	57.10	70
GEHE150	230/60/3	50.9	22.4	149	2	6.1	2	1	56.50	70
GEHE150	460/60/3	24.3	10.6	75	2	3.1	2	1	26.95	35
GEHE150	208/60/3	53.6	22.4	149	2	8.8	3	1	59.20	80
GEHE150	230/60/3	52.8	22.4	149	2	8.0	3	1	58.40	80
GEHE150	460/60/3	25.2	10.6	75	2	4.0	3	1	27.85	35
GEHE150	208/60/3	59.4	22.4	149	2	14.6	5	1	65.00	80
GEHE150	230/60/3	58.0	22.4	149	2	13.2	5	1	63.60	80
GEHE150	460/60/3	27.8	10.6	75	2	6.6	5	1	30.45	40
GEHE180	208/60/3	56.7	25.0	164	2	6.7	2	1	62.95	80
GEHE180	230/60/3	56.1	25.0	164	2	6.1	2	1	62.35	80
GEHE180	460/60/3	27.5	12.2	100	2	3.1	2	1	30.55	40
GEHE180	208/60/3	58.8	25.0	164	2	8.8	3	1	65.05	90
GEHE180	230/60/3	58.0	25.0	164	2	8.0	3	1	64.25	80
GEHE180	460/60/3	28.4	12.2	100	2	4.0	3	1	31.45	40
GEHE180	208/60/3	64.6	25.0	164	2	14.6	5	1	70.85	90
GEHE180	230/60/3	63.2	25.0	164	2	13.2	5	1	69.45	90
GEHE180	460/60/3	31.0	12.2	100	2	6.6	5	1	34.05	45
GEHE180	208/60/3	72.1	25.0	164	2	22.1	7 1/2	1	78.35	100
GEHE180	230/60/3	70.0	25.0	164	2	20.0	7 1/2	1	76.25	100
GEHE180	460/60/3	34.4	12.2	100	2	10.0	7 1/2	1	37.45	45
GEVE072	208/60/3	24.1	10.4	73	2	3.3	1	1	26.70	35
GEVE072	230/60/3	23.8	10.4	73	2	3.0	1	1	26.40	35
GEVE072	460/60/3	13.1	5.8	38	2	1.5	1	1	14.55	20

Table 204. Electrical data two speed blower motor 6 to 25 tons (continued)

Model	Volts	Total Unit FLA	Comp RLA (ea)	Comp LRA (ea)	No. of Comp	Blower Motor FLA	Blower Motor HP	Fan Motors No.	Minimum Circuit Ampacity	Maximum Overcurrent Protection
GEVE072	208/60/3	25.7	10.4	73	2	4.9	1 1/2	1	28.30	35
GEVE072	230/60/3	25.2	10.4	73	2	4.4	1 1/2	1	27.80	35
GEVE072	460/60/3	13.8	5.8	38	2	2.2	1 1/2	1	15.25	20
GEVE072	208/60/3	27.5	10.4	73	2	6.7	2	1	30.10	40
GEVE072	230/60/3	26.9	10.4	73	2	6.1	2	1	29.50	35
GEVE072	460/60/3	14.7	5.8	38	2	3.1	2	1	16.15	20
GEVE090	208/60/3	28.2	14.5/10.4	98/73	2	3.3	1	1	31.83	45
GEVE090	230/60/3	27.9	14.5/10.4	98/73	2	3.0	1	1	31.53	45
GEVE090	460/60/3	13.6	6.3/5.8	55/38	2	1.5	1	1	15.18	20
GEVE090	208/60/3	29.8	14.5/10.4	98/73	2	4.9	1 1/2	1	33.43	45
GEVE090	230/60/3	29.3	14.5/10.4	98/73	2	4.4	1 1/2	1	32.93	45
GEVE090	460/60/3	14.3	6.3/5.8	55/38	2	2.2	1 1/2	1	15.88	20
GEVE090	208/60/3	31.6	14.5/10.4	98/73	2	6.7	2	1	35.23	45
GEVE090	230/60/3	31.0	14.5/10.4	98/73	2	6.1	2	1	34.63	45
GEVE090	460/60/3	15.2	6.3/5.8	55/38	2	3.1	2	1	16.78	20
GEVE090	208/60/3	33.7	14.5/10.4	98/73	2	8.8	3	1	37.33	50
GEVE090	230/60/3	32.9	14.5/10.4	98/73	2	8.0	3	1	36.53	50
GEVE090	460/60/3	16.1	6.3/5.8	55/38	2	4.0	3	1	17.68	20
GEVE120	208/60/3	36.9	16.0	110	2	4.9	1 1/2	1	40.90	50
GEVE120	230/60/3	36.4	16.0	110	2	4.4	1 1/2	1	40.40	50
GEVE120	460/60/3	17.8	7.8	52	2	2.2	1 1/2	1	19.75	25
GEVE120	208/60/3	38.7	16.0	110	2	6.7	2	1	42.70	50
GEVE120	230/60/3	38.1	16.0	110	2	6.1	2	1	42.10	50
GEVE120	460/60/3	18.7	7.8	52	2	3.1	2	1	20.65	25
GEVE120	208/60/3	40.8	16.0	110	2	8.8	3	1	44.80	60
GEVE120	230/60/3	40.0	16.0	110	2	8.0	3	1	44.00	60
GEVE120	460/60/3	19.6	7.8	52	2	4.0	3	1	21.55	25
GEVE120	208/60/3	46.6	16.0	110	2	14.6	5	1	50.60	60
GEVE120	230/60/3	45.2	16.0	110	2	13.2	5	1	49.20	60
GEVE120	460/60/3	22.2	7.8	52	2	6.6	5	1	24.15	30

Table 204. Electrical data two speed blower motor 6 to 25 tons (continued)

Model	Volts	Total Unit FLA	Comp RLA (ea)	Comp LRA (ea)	No. of Comp	Blower Motor FLA	Blower Motor HP	Fan Motors No.	Minimum Circuit Ampacity	Maximum Overcurrent Protection
GEVE150	208/60/3	51.5	22.4	149	2	6.7	2	1	57.10	70
GEVE150	230/60/3	50.9	22.4	149	2	6.1	2	1	56.50	70
GEVE150	460/60/3	24.3	10.6	75	2	3.1	2	1	26.95	35
GEVE150	208/60/3	53.6	22.4	149	2	8.8	3	1	59.20	80
GEVE150	230/60/3	52.8	22.4	149	2	8.0	3	1	58.40	80
GEVE150	460/60/3	25.2	10.6	75	2	4.0	3	1	27.85	35
GEVE150	208/60/3	59.4	22.4	149	2	14.6	5	1	65.00	80
GEVE150	230/60/3	58.0	22.4	149	2	13.2	5	1	63.60	80
GEVE150	460/60/3	27.8	10.6	75	2	6.6	5	1	30.45	40
GEVE180	208/60/3	58.8	25.0	164	2	8.8	3	1	65.05	90
GEVE180	230/60/3	58.0	25.0	164	2	8.0	3	1	64.25	80
GEVE180	460/60/3	28.4	12.2	100	2	4.0	3	1	31.45	40
GEVE180	208/60/3	64.6	25.0	164	2	14.6	5	1	70.85	90
GEVE180	230/60/3	63.2	25.0	164	2	13.2	5	1	69.45	90
GEVE180	460/60/3	31.0	12.2	100	2	6.6	5	1	34.05	45
GEVE180	208/60/3	72.1	25.0	164	2	22.1	7 1/2	1	78.35	100
GEVE180	230/60/3	70.0	25.0	164	2	20.0	7 1/2	1	76.25	100
GEVE180	460/60/3	34.4	12.2	100	2	10.0	7 1/2	1	37.45	45
GEVE240	208/60/3	74.8	30.1	225	2	14.6	5	1	82.33	110
GEVE240	230/60/3	73.4	30.1	225	2	13.2	5	1	80.93	110
GEVE240	460/60/3	40.0	16.7	114	2	6.6	5	1	44.18	60
GEVE240	208/60/3	82.3	30.1	225	2	22.1	7 1/2	1	89.83	110
GEVE240	230/60/3	80.2	30.1	225	2	20.0	7 1/2	1	87.73	110
GEVE240	460/60/3	43.4	16.7	114	2	10.0	7 1/2	1	47.58	60
GEVE240	208/60/3	87.8	30.1	225	2	27.6	10	1	95.33	125
GEVE240	230/60/3	85.2	30.1	225	2	25.0	10	1	92.73	110
GEVE240	460/60/3	46.4	16.7	114	2	13.0	10	1	50.58	60
GEVE240	460/60/3	53.4	16.7	114	2	20.0	15	1	58.40	70
GEVE300	208/60/3	110.8	48.1	245	2	14.6	5	1	122.83	150
GEVE300	230/60/3	109.4	48.1	245	2	13.2	5	1	121.43	150

Table 204. Electrical data two speed blower motor 6 to 25 tons (continued)

Model	Volts	Total Unit FLA	Comp RLA (ea)	Comp LRA (ea)	No. of Comp	Blower Motor FLA	Blower Motor HP	Fan Motors No.	Minimum Circuit Ampacity	Maximum Overcurrent Protection
GEVE300	460/60/3	43.8	18.6	125	2	6.6	5	1	48.45	60
GEVE300	208/60/3	118.3	48.1	245	2	22.1	7 1/2	1	130.33	175
GEVE300	230/60/3	116.2	48.1	245	2	20.0	7 1/2	1	128.23	175
GEVE300	460/60/3	47.2	18.6	125	2	10.0	7 1/2	1	51.85	70
GEVE300	208/60/3	123.8	48.1	245	2	27.6	10	1	135.83	175
GEVE300	230/60/3	121.2	48.1	245	2	25.0	10	1	133.23	175
GEVE300	460/60/3	50.2	18.6	125	2	13.0	10	1	54.85	70
GEVE300	460/60/3	57.2	18.6	125	2	20.0	15	1	62.20	80

Table 205. Electrical minimum and maximum 0.5 to 25 tons

Digit 8	Rated Voltage	Hz	pH	Min Utiliz. Volts	Max Utiliz. Volts
0	115	60	1	104	126
1	208	60	1	197	229
2	230	60	1	207	253
3	208	60	3	187	229
4	460	60	3	414	506
5	575	60	3	518	633
6	220-240	50	1	198	264
7	265	60	1	239	292
8	230	60	3	207	253
9	380-415	50	3	342	456
A	208-230	60	1	197	253
B	208-230	60	3	187	253

Unit Dimensions

Service Clearances

Per NEC requirements, 36 inches of access and working space shall be provided and maintained around all control boxes and electrical equipment to permit ready and safe operation and maintenance of such equipment. Local codes may require more clearance to electrical equipment. Check all code requirements prior to unit installation.

Figure 42. Clearances - GEH 0.5 to 5 tons

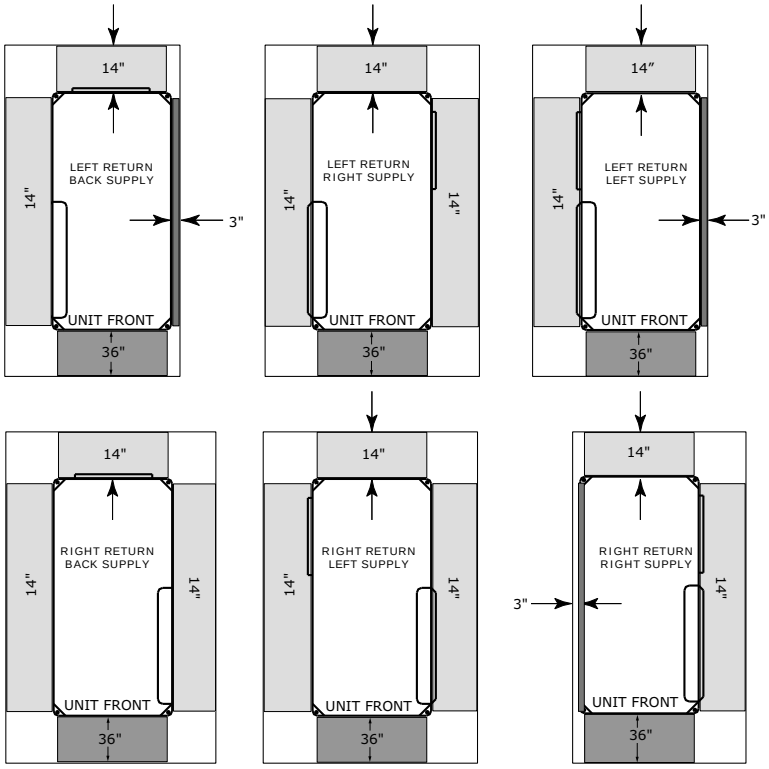

A minimum 14–inch clearance for servicing the unit is required for all 0.5 to 5 tons configurations from other mechanical and electrical equipment (where shown) to enable panel removal from the unit for service/maintenance ability. The optimum clearance required is 20 inches. Equipment containing a same-side supply/return combination requires a 3 inches limitation on one side. Access to the TXV may not be possible with this 3 inches clearance. This configuration is typically applied in a corridor installation, where space limitations force the left or right side of the unit against a wall.

Figure 43. Clearance - GEH 6 to 15 Tons

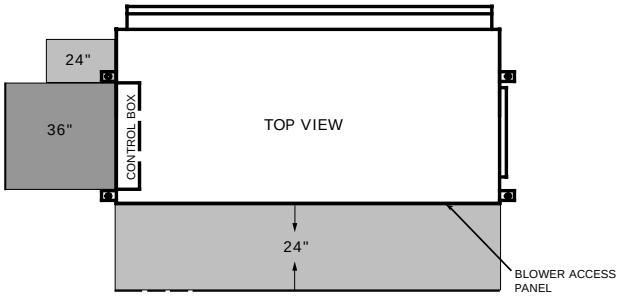

Service clearance dimensions for the GEH 6 to15 tons horizontal includes a two side access appropriate for control and blower motor/wheel access.

Figure 44. Clearance – GEV .5 to 5 tons

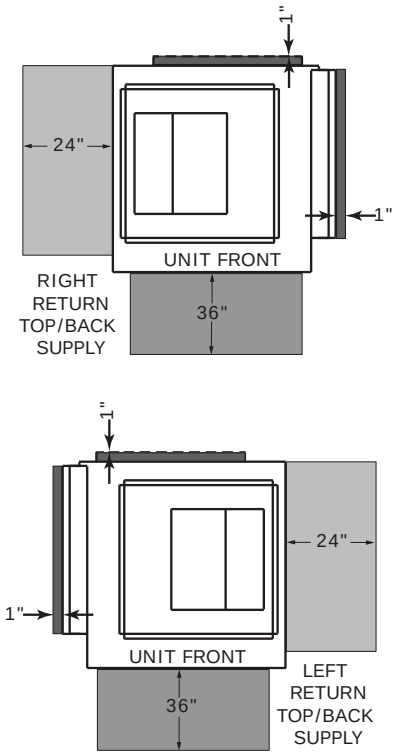

A 24–inch clearance from other mechanical and electrical equipment (where shown) is recommended for most unit configurations. This will enable panel removal from the unit for service/maintenance.
The 24–inch side clearance on GEVG 0.5-5T models is for optimal access only. Side clearance is not a requirement as most components can be accessed from the front of the unit.
A 1–inch minimum clearance between the filter rack and any obstacle is required for units in a free return application to provide proper air flow to the air-to-refrigerant coil. A 12 inch minimum clearance between the filter rack and any obstacle should be provided to properly attached ductwork.
The 1–inch dimension shown in the back of the unit represents the supply duct collar for the back supply option. This clearance is needed to clear these flanges.

Figure 45. Clearance - GEV 6 to 10 Tons

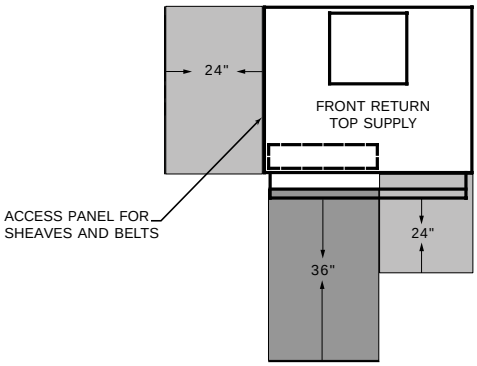

A 24–inch clearance from other mechanical and electrical equipment (where shown) is recommended for all configurations. The unit may be serviced through the front access panel or remaining open sides.

Figure 46. Clearance - GEV 12.5 to 25 Tons

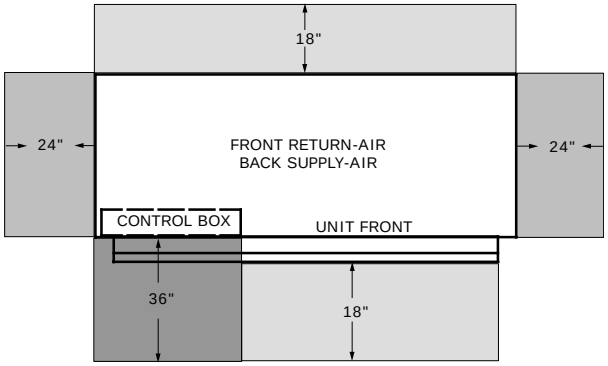

A 24–inch clearance from other mechanical and electrical equipment (where shown) is recommended for all configurations. The unit may be serviced through the front access panel.

Dimensional Data

Figure 47. Left return/left supply (GEHE)

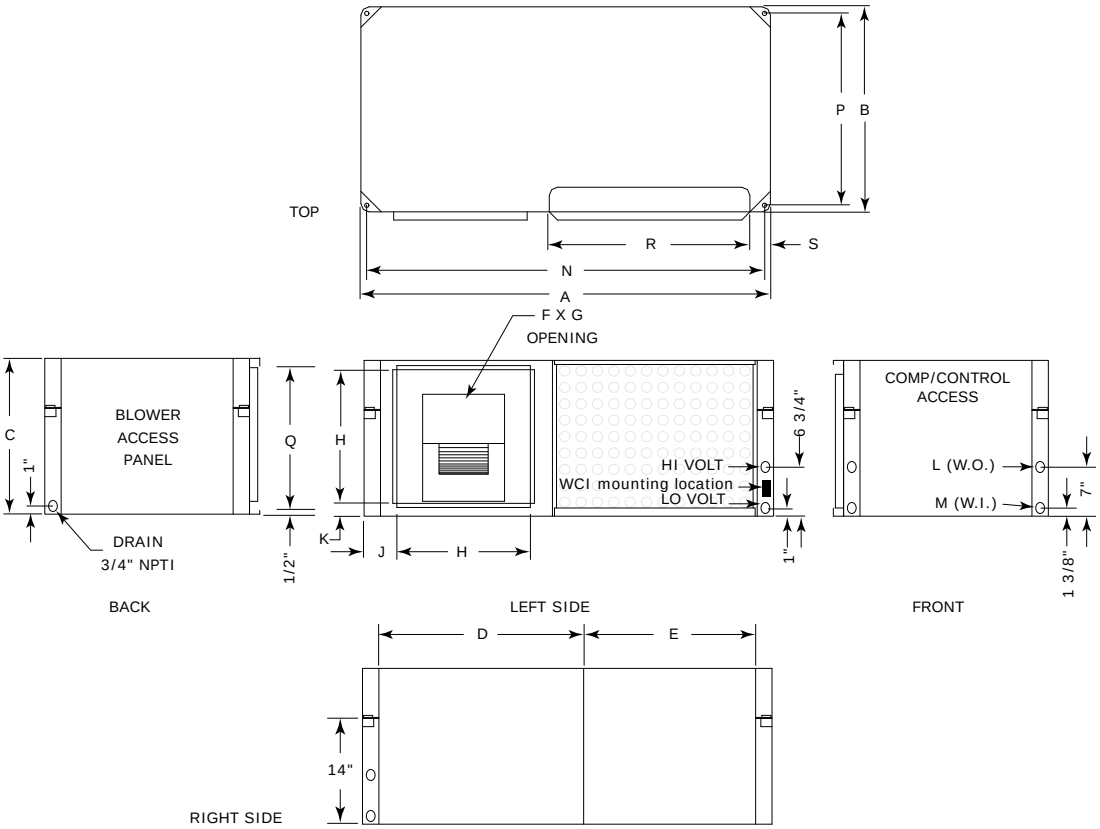

Table 206. Dimensional data left return/left supply (GEHE)

GEH Unit (60 Hz)	GEH Unit (50 Hz)	A	B	C	D[a]	E	F x G	H	J	K	L NPTI	M NPTI	N	P	Q	R[b]	S
006, 009	006	40	20	15	20	15	6-7/8 x 8	11-1/2	4-1/2	1-3/4	1/2	1/2	38-3/4	18-3/4	13-5/8	18-1/2	3-1/4
012, 015	009, 012	40	20	15	20	15	6-7/8 x 9-7/8	11-1/2	4-1/4	3/4	1/2	1/2	38-3/4	18-3/4	13-5/8	18-1/2	3-1/4
018	015	46	23	18	23	18	8-1/4 x 9-3/4	13-1/2	4-3/4	1-3/8	3/4	3/4	44-3/4	21-3/4	16-5/8	18-1/2	4-1/4
024, 030	018, 024	46	23	18	23	18	8-1/4 x 11-3/8	13-1/2	4-3/4	1-3/8	3/4	3/4	44-3/4	21-3/4	16-5/8	18-1/2	4-1/4
035, 042	030, 036	50	25	19	25	20	10-1/2 x 13-1/2	17	4	1	3/4	3/4	48-3/4	23-3/4	17-5/8	23-1/2	3-1/4
Std-048	Std-042	58	33	21	29-1/2	23-1/2	13-1/8 x 11-3/8	18	5-1/4	1-1/2	1	1	56-3/4	31-3/4	19-5/8	23-1/2	5-1/2
Hi-048, 060	Hi-042, 048, 060	58	33	21	29-1/2	23-1/2	13-7/8 x 13-7/8	18	5-1/4	1-1/2	1	1	56-3/4	31-3/4	19-5/8	23-1/2	5-1/2

Notes:

1. When a horizontal model is ordered with the same side return and supply in a ducted application, bottom filter removal is required due to limited access on either side of the filter.
2. Equipment containing a same-side supply/return combination requires a 3 in. clearance on one side. Access to the TXV may not be possible with this 3 in. clearance.

[a] Return air opening dimension.
[b] Filter rack dimension.

Figure 48. Left return/back supply (GEHE)

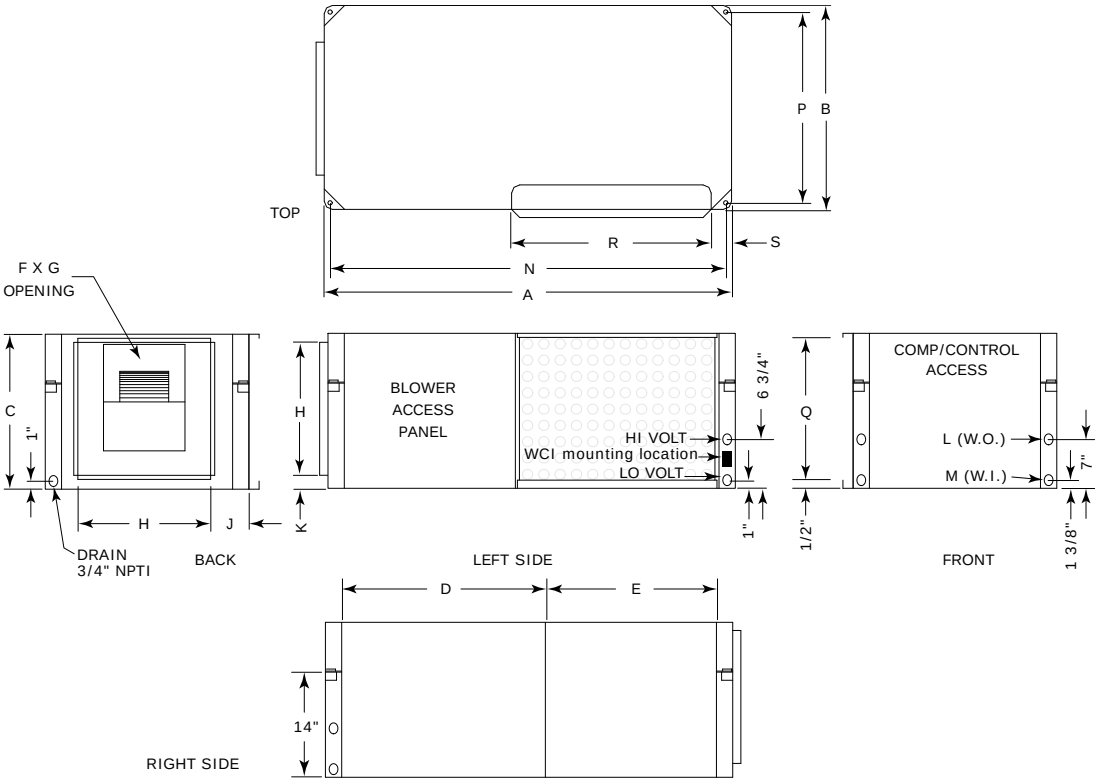

Table 207. Dimensional data left return/back supply (GEHE)

GEH Unit (60 Hz)	GEH Unit (50 Hz)	A	B	C	D[a]	E	F x G	H	J	K	L NPTI	M NPTI	N	P	Q	R[b]	S
006, 009	006	40	20	15	20	15	6-7/8 x 8	11-1/2	4-1/2	1-3/4	1/2	1/2	38-3/4	18-3/4	13-5/8	18-1/2	3-1/4
012, 015	009, 012	40	20	15	20	15	6-7/8 x 9-7/8	11-1/2	4-1/4	3/4	1/2	1/2	38-3/4	18-3/4	13-5/8	18-1/2	3-1/4
018	015	46	23	18	23	18	8-1/4 x 9-3/4	13-1/2	4-3/4	1-3/8	3/4	3/4	44-3/4	21-3/4	16-5/8	18-1/2	4-1/4
024, 030	018, 024	46	23	18	23	18	8-1/4 x 11-3/8	13-1/2	4-3/4	1-3/8	3/4	3/4	44-3/4	21-3/4	16-5/8	18-1/2	4-1/4
035, 042	030, 036	50	25	19	25	20	10-1/2 x 13-1/2	17	4	1	3/4	3/4	48-3/4	23-3/4	17-5/8	23-1/2	3-1/4
Std-048	Std-042	58	33	21	29-1/2	23-1/2	13-1/8 x 11-3/8	18	5-1/4	1-1/2	1	1	56-3/4	31-3/4	19-5/8	23-1/2	5-1/2
Hi-048, 060	Hi-042, 048, 060	60	58	33	29-1/2	23-1/2	13-7/8 x 13-7/8	18	5-1/4	1-1/2	1	1	56-3/4	31-3/4	19-5/8	23-1/2	5-1/2

Notes:

1. When a horizontal model is ordered with the same side return and supply in a ducted application, bottom filter removal is required due to limited access on either side of the filter.
2. Equipment containing a same-side supply/return combination requires a 3 in. clearance on one side. Access to the TXV may not be possible with this 3 in. clearance.

(a) Return air opening dimension.

(b) Filter rack dimension.

Figure 49. Left return/right supply (GEHE)

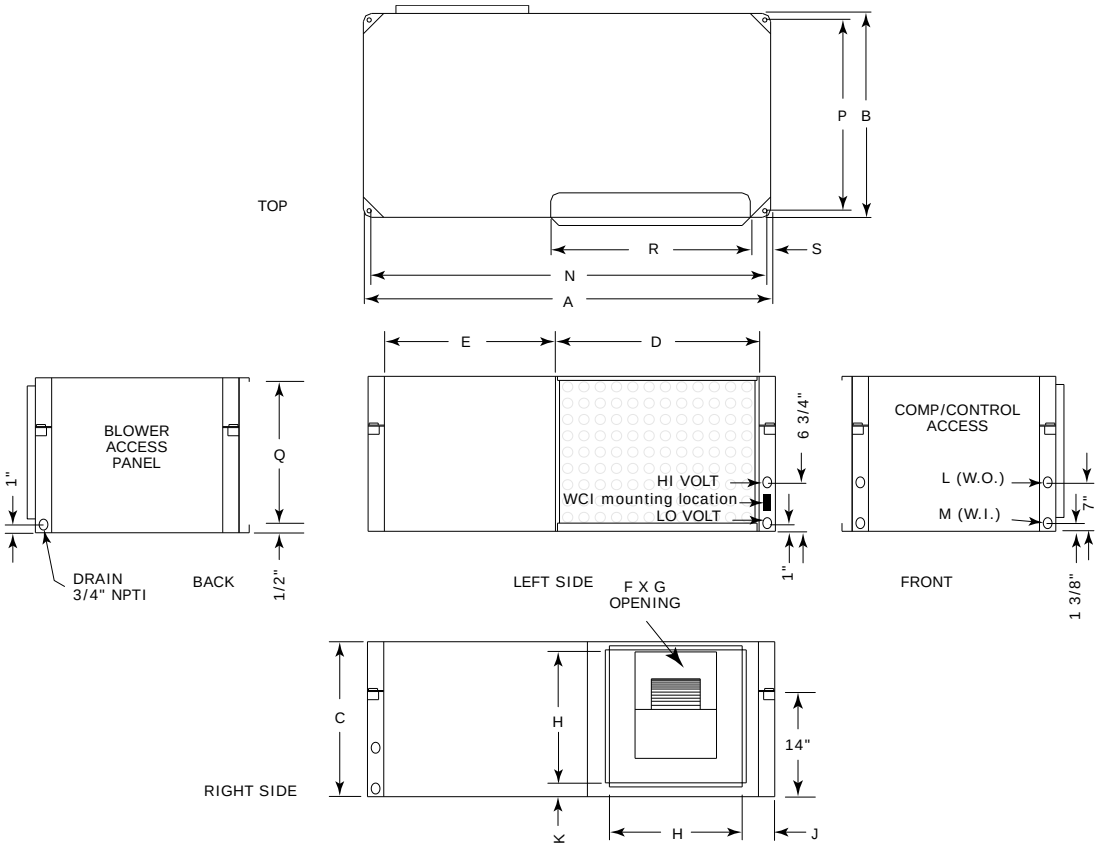

Table 208. Dimensional data left return/right supply (GEHE)

GEH Unit (60 Hz)	GEH Unit (50 Hz)	A	B	C	D[a]	E	F x G	H	J	K	L NPTI	M NPTI	N	P	Q	R[b]	S
006, 009	006	40	20	15	20	15	6-7/8 x 8	11-1/2	4-1/2	1-3/4	1/2	1/2	38-3/4	18-3/4	13-5/8	18-1/2	3-1/4
012, 015	009, 012	40	20	15	20	15	6-7/8 x 9-7/8	11-1/2	4-1/4	3/4	1/2	1/2	38-3/4	18-3/4	13-5/8	18-1/2	3-1/4
018	015	46	23	18	23	18	8-1/4 x 9-3/4	13-1/2	4-3/4	1-3/8	3/4	3/4	44-3/4	21-3/4	16-5/8	18-1/2	4-1/4
024, 030	018, 024	46	23	18	23	18	8-1/4 x 11-3/8	13-1/2	4-3/4	1-3/8	3/4	3/4	44-3/4	21-3/4	16-5/8	18-1/2	4-1/4
035, 042	030, 036	50	25	19	25	20	10-1/2 x 13-1/2	17	4	1	3/4	3/4	48-3/4	23-3/4	17-5/8	23-1/2	3-1/4
Std-048	Std-042	58	33	21	29-1/2	23-1/2	13-1/8 x 11-3/8	18	5-1/4	1-1/2	1	1	56-3/4	31-3/4	19-5/8	23-1/2	5-1/2
Hi-048, 060	Hi-042, 048, 060	58	33	21	29-1/2	23-1/2	13-7/8 x 13-7/8	18	5-1/4	1-1/2	1	1	56-3/4	31-3/4	19-5/8	23-1/2	5-1/2

Note: Equipment containing a same-side supply/return combination requires a 3 in. clearance on one side. Access to the TXV may not be possible with this 3 in. clearance.

(a) Return air opening dimension.
(b) Filter rack dimension.

Figure 50. Right return/left supply (GEHE)

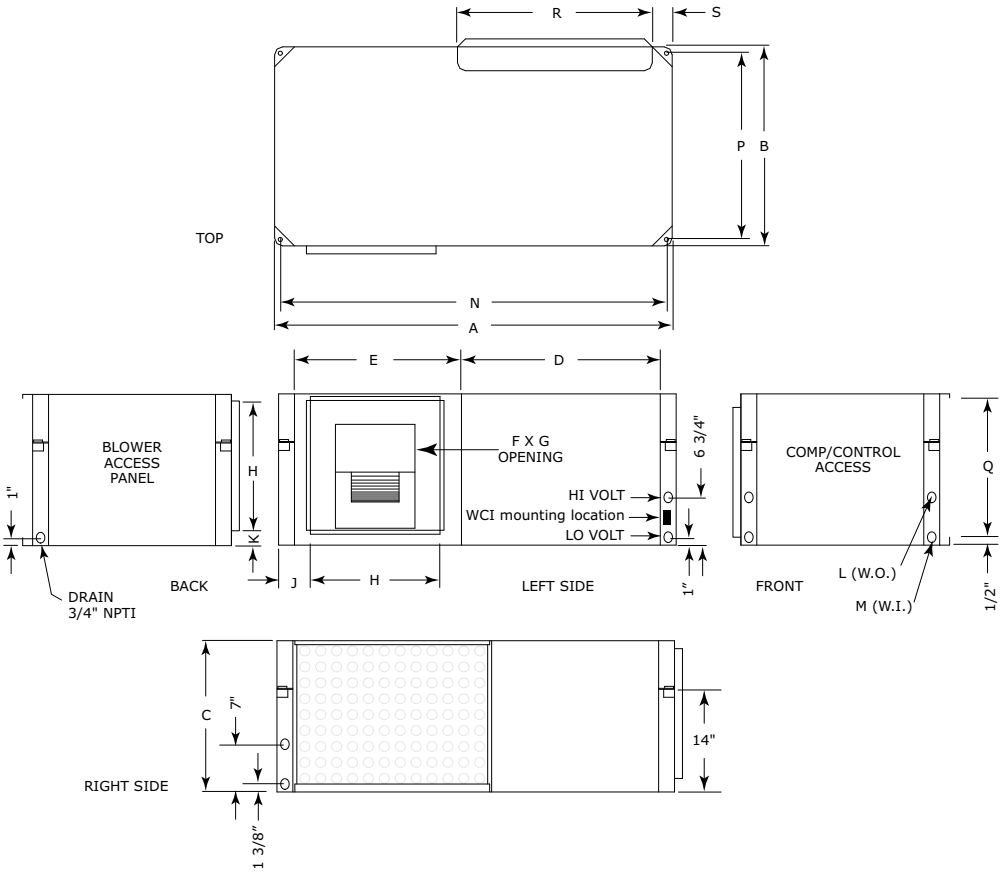

Table 209. Dimensional data right return/left supply (GEHE)

GEH Unit (60 Hz)	GEH Unit (50 Hz)	A	B	C	D[a]	E	F x G	H	J	K	L NPTI	M NPTI	N	P	Q	R[b]	S
006, 009	006	40	20	15	20	15	6-7/8 x 8	11-1/2	4-1/2	1-3/4	1/2	1/2	38-3/4	18-3/4	13-5/8	18-1/2	3-1/4
012, 015	009, 012	40	20	15	20	15	6-7/8 x 9-7/8	11-1/2	4-1/4	3/4	1/2	1/2	38-3/4	18-3/4	13-5/8	18-1/2	3-1/4
018	015	46	23	18	23	18	8-1/4 x 9-3/4	13-1/2	4-3/4	1-3/8	3/4	3/4	44-3/4	21-3/4	16-5/8	18-1/2	4-1/4
024, 030	018, 024	46	23	18	23	18	8-1/4 x 11-3/8	13-1/2	4-3/4	1-3/8	3/4	3/4	44-3/4	21-3/4	16-5/8	18-1/2	4-1/4
035, 042	030, 036	50	25	19	25	20	10-1/2 x 13-1/2	17	4	1	3/4	3/4	48-3/4	23-3/4	17-5/8	23-1/2	3-1/4
Std-048	Std-042	58	33	21	29-1/2	23-1/2	13-1/8 x 11-3/8	18	5-1/4	1-1/2	1	1	56-3/4	31-3/4	19-5/8	23-1/2	5-1/2
Hi-048, 060	Hi-042, 048, 060	58	33	21	29-1/2	23-1/2	13-7/8 x 13-7/8	18	5-1/4	1-1/2	1	1	56-3/4	31-3/4	19-5/8	23-1/2	5-1/2

Note: Equipment containing a same-side supply/return combination requires a 3 in. clearance on one side. Access to the TXV may not be possible with this 3 in. clearance.

(a) Return air opening dimension.
(b) Filter rack dimension.

Figure 51. Right return/back supply (GEHE)

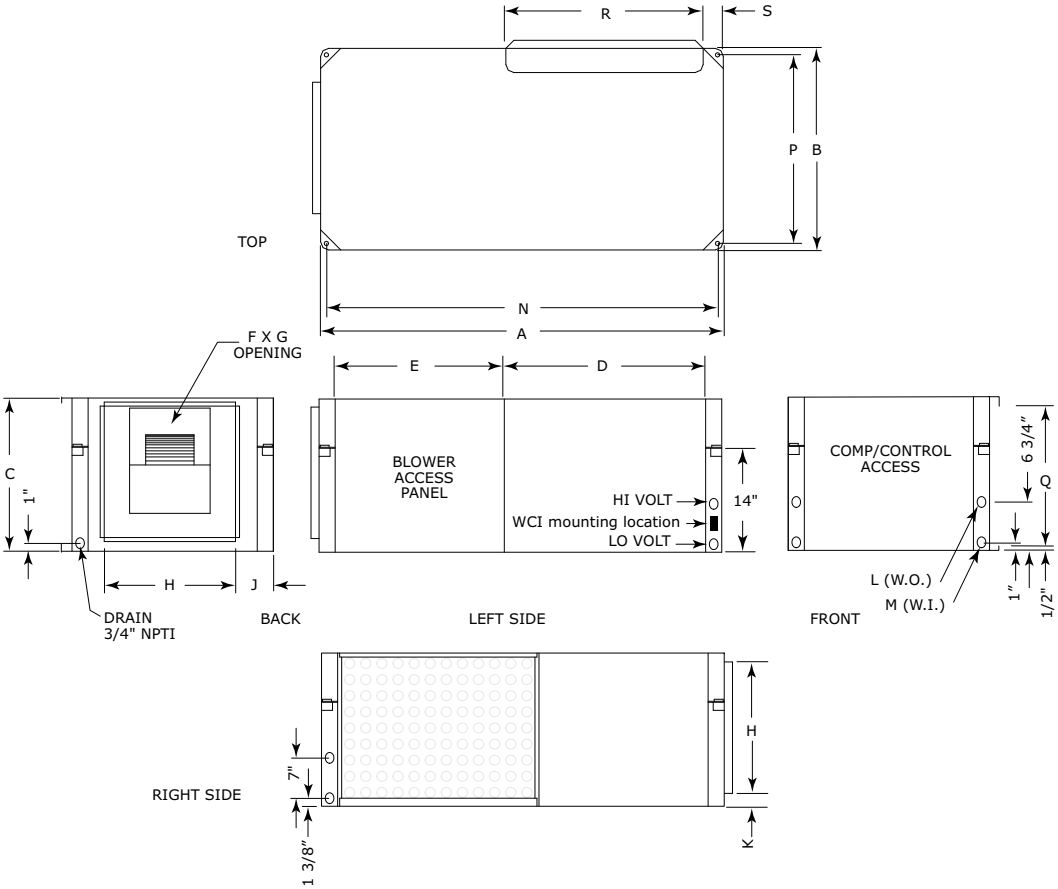

Table 210. Dimensional data right return/back supply (GEHE)

GEH Unit (60 Hz)	GEH Unit (50 Hz)	A	B	C	D[a]	E	F x G	H	J	K	L NPTI	M NPTI	N	P	Q	R[b]	S
006, 009	006	40	20	15	20	15	6-7/8 x 8	11-1/2	4-1/2	1-3/4	1/2	1/2	38-3/4	18-3/4	13-5/8	18-1/2	3-1/4
012, 015	009, 012	40	20	15	20	15	6-7/8 x 9-7/8	11-1/2	4-1/4	3/4	1/2	1/2	38-3/4	18-3/4	13-5/8	18-1/2	3-1/4
018	015	46	23	18	23	18	8-1/4 x 9-3/4	13-1/2	4-3/4	1-3/8	3/4	3/4	44-3/4	21-3/4	16-5/8	18-1/2	4-1/4
024, 030	018, 024	46	23	18	23	18	8-1/4 x 11-3/8	13-1/2	4-3/4	1-3/8	3/4	3/4	44-3/4	21-3/4	16-5/8	18-1/2	4-1/4
035, 042	030, 036	50	25	19	25	20	10-1/2 x 13-1/2	17	4	1	3/4	3/4	48-3/4	23-3/4	17-5/8	23-1/2	3-1/4
Std-048	Std-042	58	33	21	29-1/2	23-1/2	13-1/8 x 11-3/8	18	5-1/4	1-1/2	1	1	56-3/4	31-3/4	19-5/8	23-1/2	5-1/2
Hi-048, 060	Hi-042, 048, 060	58	33	21	29-1/2	23-1/2	13-7/8 x 13-7/8	18	5-1/4	1-1/2	1	1	56-3/4	31-3/4	19-5/8	23-1/2	5-1/2

Note: Equipment containing a same-side supply/return combination requires a 3 in. clearance on one side. Access to the TXV may not be possible with this 3 in. clearance.

(a) Return air opening dimension.
(b) Filter rack dimension.

Figure 52. Right return/right supply (GEHE)

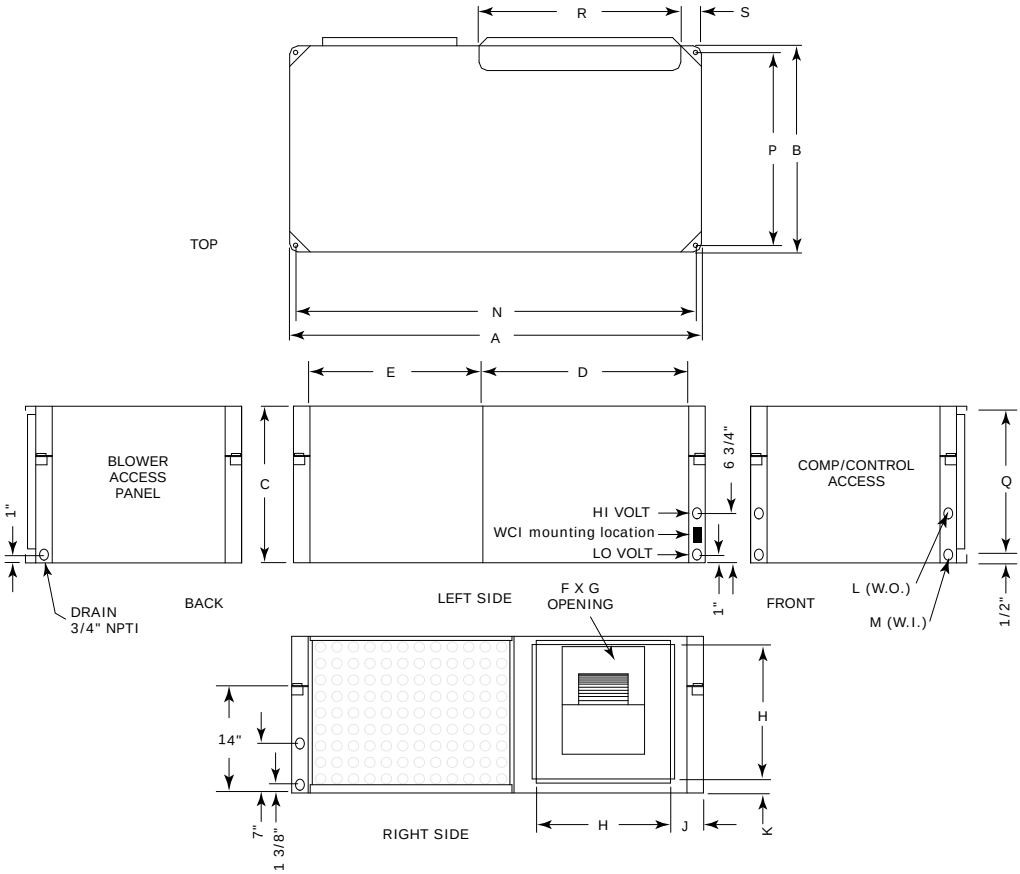

Table 211. Dimensional data right return/right supply (GEHE)

GEH Unit (60 Hz)	GEH Unit (50 Hz)	A	B	C	D[a]	E	F x G	H	J	K	L NPTI	M NPTI	N	P	Q	R[b]	S
006, 009	006	40	20	15	20	15	6-7/8 x 8	11-1/2	4-1/2	1-3/4	1/2	1/2	38-3/4	18-3/4	13-5/8	18-1/2	3-1/4
012, 015	009, 012	40	20	15	20	15	6-7/8 x 9-7/8	11-1/2	4-1/4	3/4	1/2	1/2	38-3/4	18-3/4	13-5/8	18-1/2	3-1/4
018	015	46	23	18	23	18	8-1/4 x 9-3/4	13-1/2	4-3/4	1-3/8	3/4	3/4	44-3/4	21-3/4	16-5/8	18-1/2	4-1/4
024, 030	018, 024	46	23	18	23	18	8-1/4 x 11-3/8	13-1/2	4-3/4	1-3/8	3/4	3/4	44-3/4	21-3/4	16-5/8	18-1/2	4-1/4
035, 042	030, 036	50	25	19	25	20	10-1/2 x 13-1/2	17	4	1	3/4	3/4	48-3/4	23-3/4	17-5/8	23-1/2	3-1/4
Std-048	Std-042	58	33	21	29-1/2	23-1/2	13-1/8 x 11-3/8	18	5-1/4	1-1/2	1	1	56-3/4	31-3/4	19-5/8	23-1/2	5-1/2
Hi-048, 060	Hi-042, 048, 060	58	33	21	29-1/2	23-1/2	13-7/8 x 13-7/8	18	5-1/4	1-1/2	1	1	56-3/4	31-3/4	19-5/8	23-1/2	5-1/2

Notes:

1. When a horizontal model is ordered with the same side return and supply in a ducted application, bottom filter removal is required due to limited access on either side of the filter.
2. Equipment containing a same-side supply/return combination requires a 3 in. clearance on one side. Access to the TXV may not be possible with this 3 in. clearance.

[a] Return air opening dimension.
[b] Filter rack dimension.

Figure 53. Left return/top supply (GEVG)

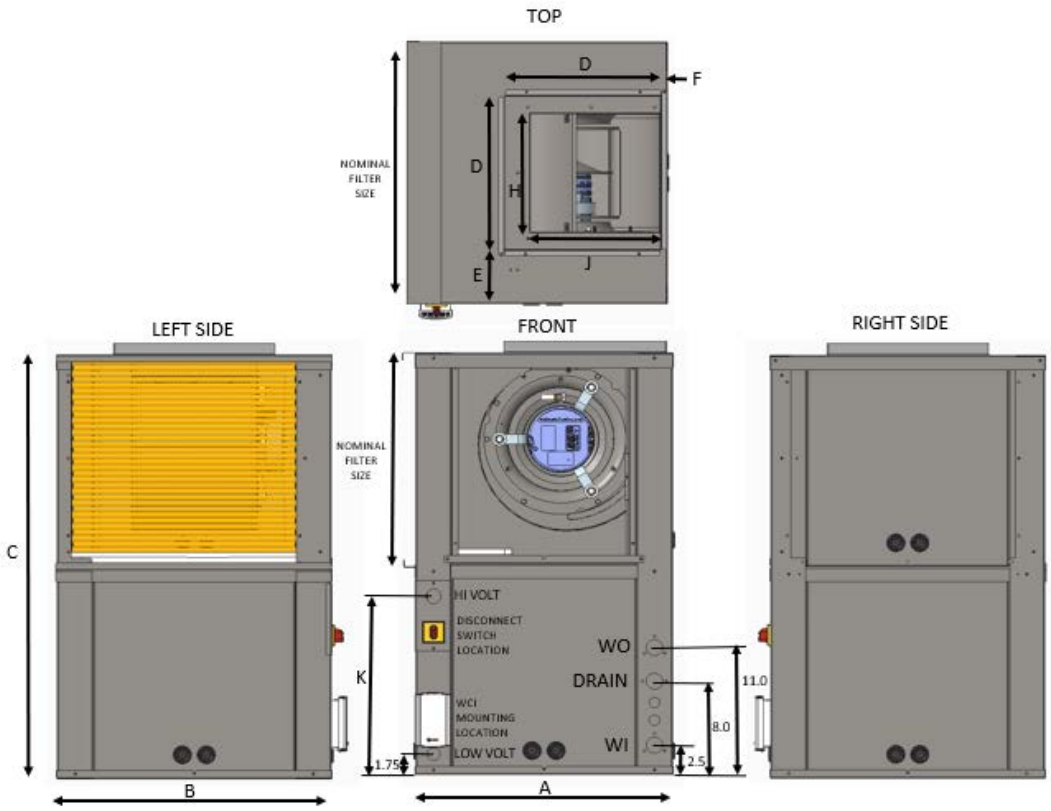

Table 212. Dimensional data left return/top supply (GEVG)

	Cabinet			Duct Collar	Duct Collar Location			Blower Opening		Hi Volt	Nominal Filter Size	W.I. NPTI	W.O. NPTI	Drain NPTI
	Width	Depth	Height											
Unit	A	B	C	D	E	F	G	H	J	K				
006-012	19.00	19.00	30.00	11.38	3.70	1.40	3.50	8.00	7.70	12.25	14 x 16	1/2	1/2	3/4
015-018	21.50	21.50	34.00	13.25	4.00	1.00	3.50	10.50	9.60	14.25	16 x 19	1/2	1/2	3/4
024-030	21.50	23.00	36.00	13.25	4.75	0.63	3.50	10.50	11.30	15.25	17 x 20	3/4	3/4	3/4
036-042	21.50	26.00	38.00	13.25	6.25	0.63	3.50	11.80	11.30	16.25	18 x 23	3/4	3/4	3/4
048-060	24.00	32.50	42.00	17.75	7.25	0.75	3.50	13.70	13.50	18.25	20 x 30	1	1	3/4

Note: Units in a free return application will require more than a 1 in. clearance to provide proper air flow to the unit's air-to-refrigerant coil.

Figure 54. Right return/top supply (GEVG)

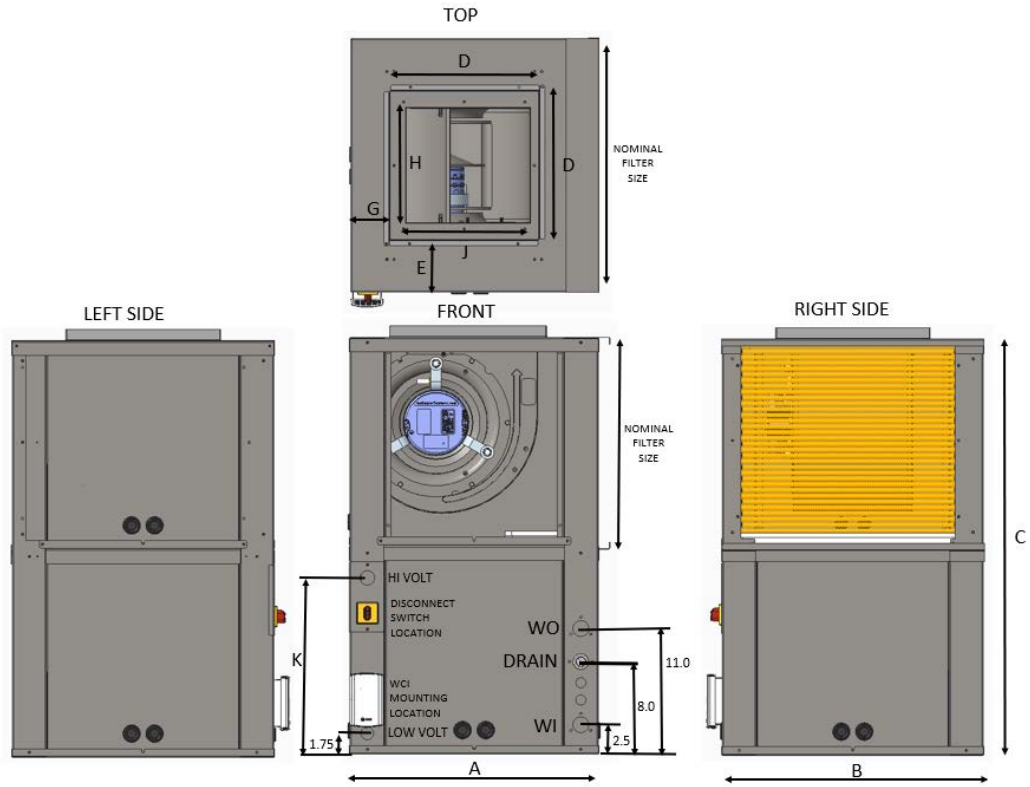

Table 213. Dimensional data right return/top supply (GEVG)

	Cabinet			Duct Collar	Duct Collar Location			Blower Opening		Hi Volt	Nominal Filter Size	W.I. NPTI	W.O. NPTI	Drain NPTI
	Width	Depth	Height											
Unit	A	B	C	D	E	F	G	H	J	K				
006-012	19.0	19.0	30.00	11.38	3.70	1.40	3.50	8.00	7.70	12.25	14 x 16	1/2	1/2	3/4
015-018	21.50	21.5	34.00	13.25	4.00	1.00	3.50	10.50	9.60	14.25	16 x 19	1/2	1/2	3/4
024-030	21.50	23.00	36.00	13.25	4.75	0.63	3.50	10.50	11.30	15.25	17 x 20	3/4	3/4	3/4
036-042	21.5	26.00	38.00	13.25	6.25	0.63	3.50	11.80	11.30	16.25	18 x 23	3/4	3/4	3/4
048-060	24.0	32.5	42.00	17.75	7.25	0.75	3.50	13.70	13.50	18.25	20 x 30	1	1	3/4

Note: Units in a free return application will require more than a 1 in. clearance to provide proper air flow to the unit's air-to-refrigerant coil.

Figure 55. Right return/left supply - GEHE 6 to 10 tons (60 Hz); GEHE 6 to 7.5 tons (50 Hz)

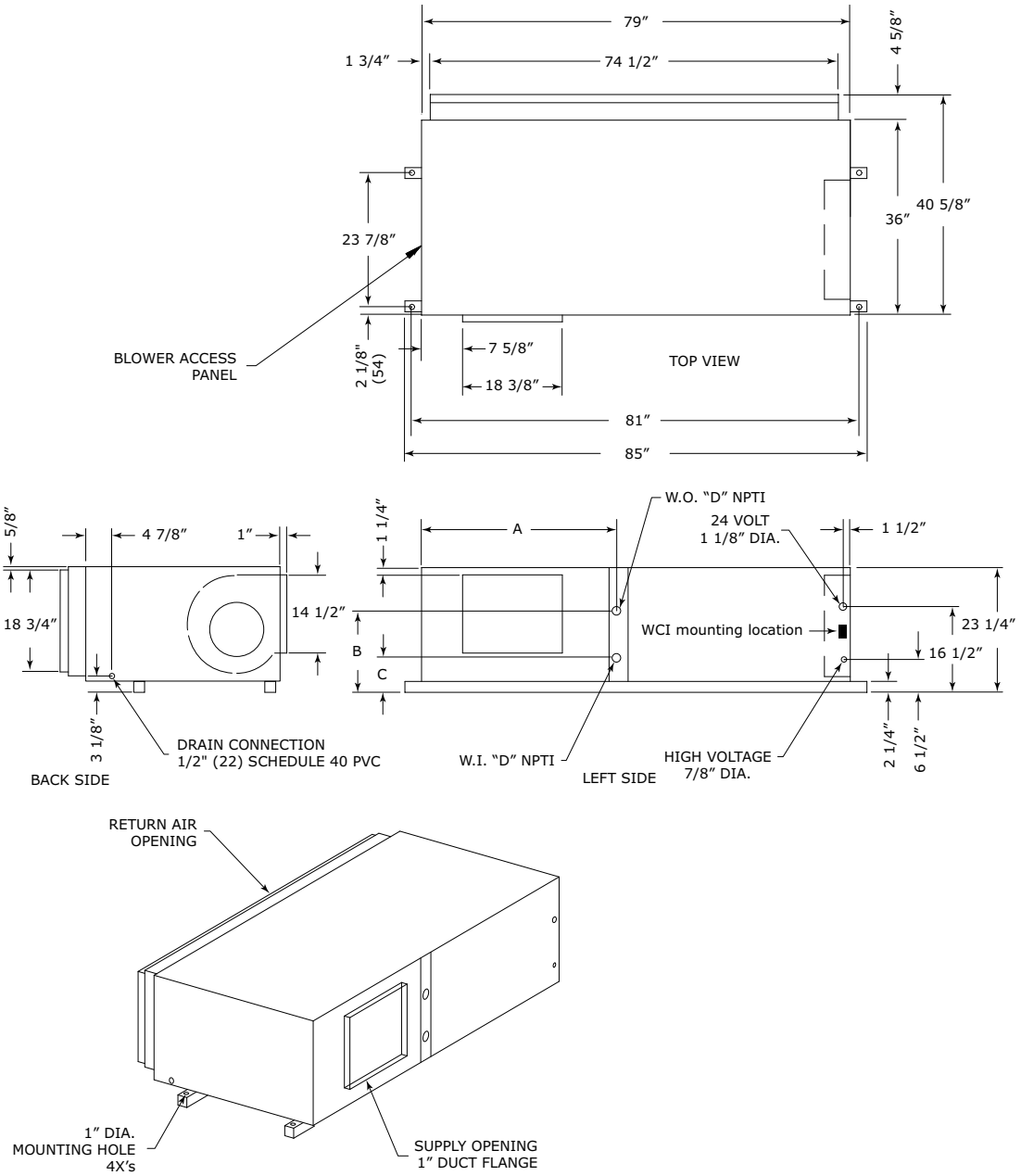

Table 214. Dimensional data right return/left supply - GEHE 6 to 10 tons (60 Hz); GEHE 6 to 7.5 tons (50 Hz)

GEH (60 Hz)	GEH (50 Hz)	A	B	C	D
72	—	36-1/4 in.	15-5/8 in.	6-5/8 in.	1-1/4 in.
90	72	36-1/8 in.	12-3/4 in.	6-3/4 in.	1-1/4 in.
120	90	36-1/8 in.	13 in.	7-1/4 in.	1-1/2 in.

Figure 56. Right return/back supply - GEHE 6 to 10 tons (60 Hz); GEHE 6 to 7.5 tons (50 Hz)

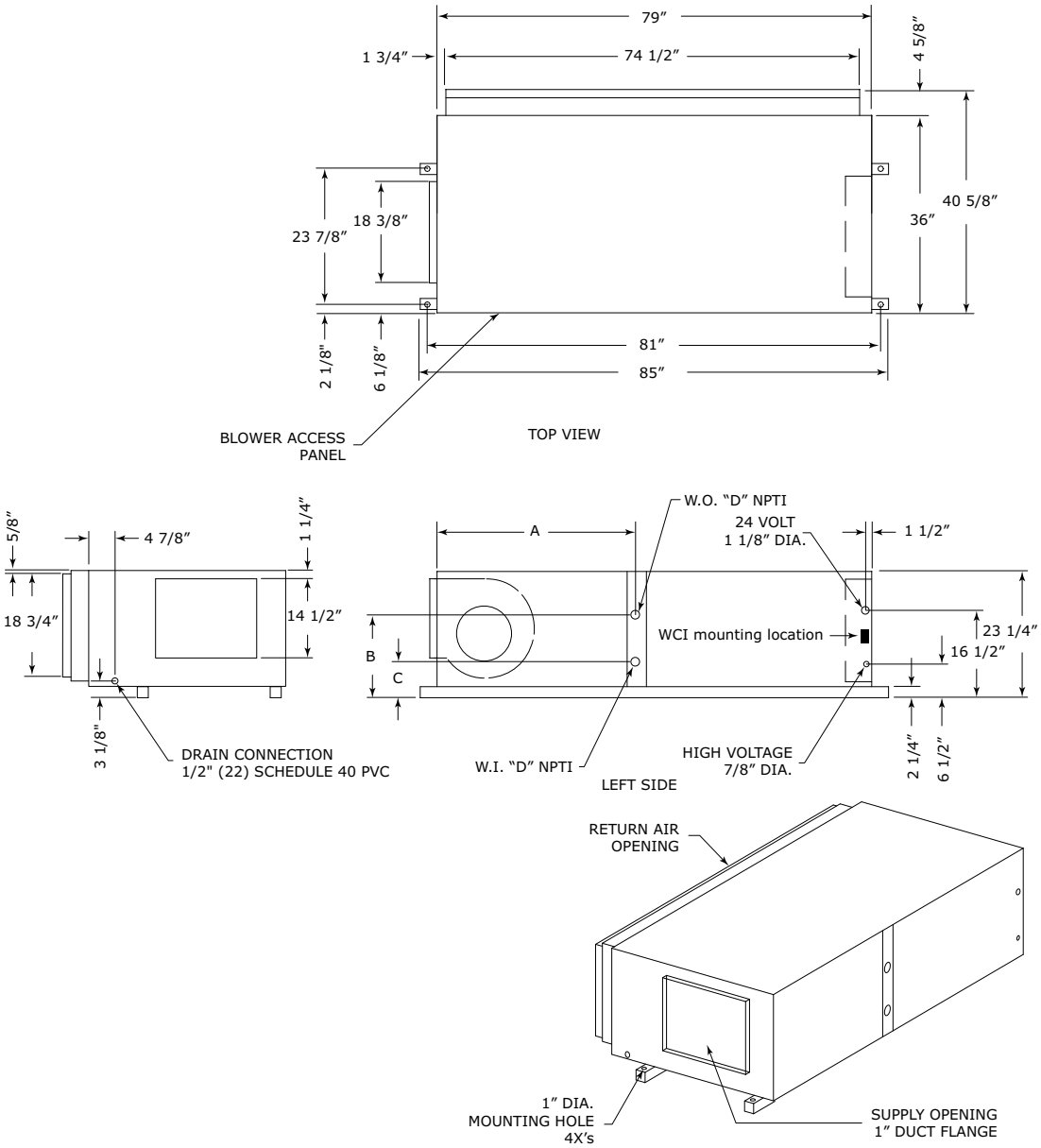

Table 215. Dimensional data right return/back supply - GEHE 6 to 10 tons (60 Hz); GEHE 6 to 7.5 tons (50 Hz)

GEH (60 Hz)	GEH (50 Hz)	A	B	C	D
72	—	36-1/4 in.	15-5/8 in.	6-5/8 in.	1-1/4 in.
90	72	36-1/8 in.	12-3/4 in.	6-3/4 in.	1-1/4 in.
120	90	36-1/8 in.	13 in.	7-1/4 in.	1-1/2 in.

Figure 57. Left return/right supply GEHE 6 to 10 tons (60 Hz); GEHE 6 to 7.5 tons (50 Hz)

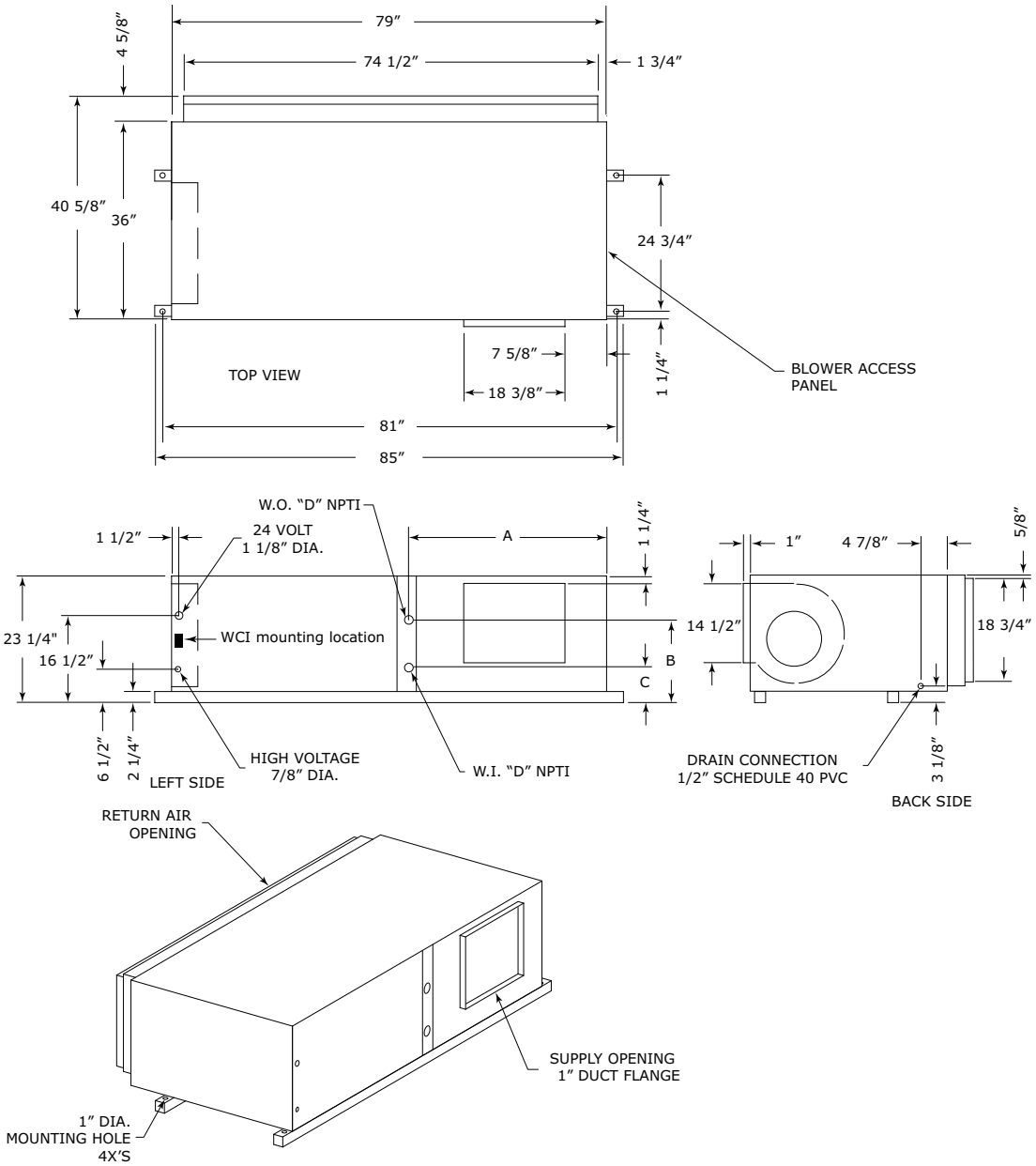

Table 216. Dimensional data left return/right supply - GEHE 6 to 10 tons (60 Hz); GEHE 6 to 7.5 tons (50 Hz)

GEH (60 Hz)	GEH (50 Hz)	A	B	C	D
72	—	36-1/8 in.	17 in.	8 in.	1-1/4 in.
90	72	36-1/8 in.	13-3/4 in.	7-3/4 in.	1-1/4 in.
120	90	36-1/8 in.	13 in.	7-1/4 in.	1-1/2 in.

Figure 58. Left return/back supply GEHE 6 to 10 tons (60 Hz); GEHE 6 to 7.5 tons (50 Hz)

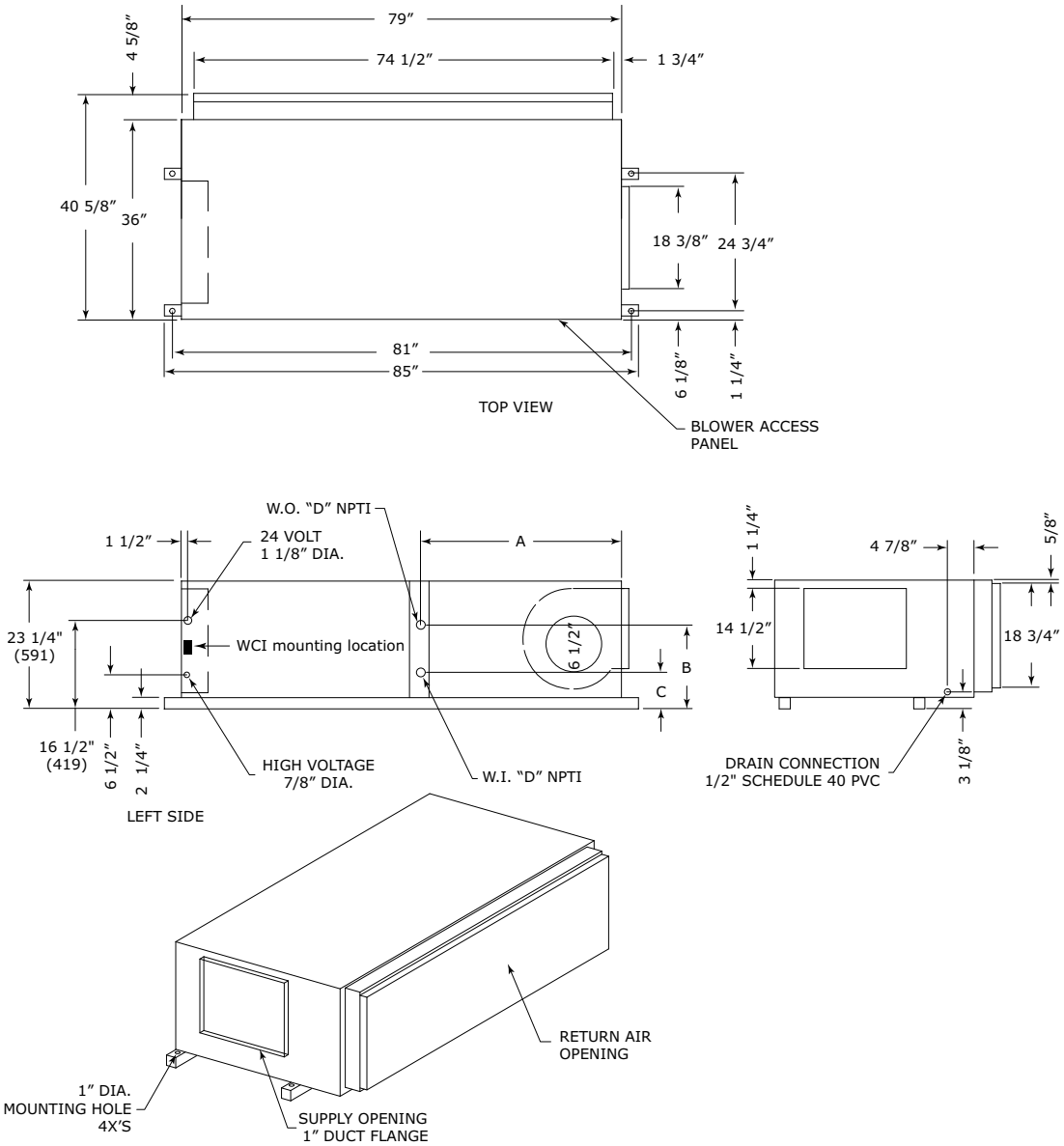

Table 217. Dimensional data left return/back supply GEHE 6 to 10 tons (60 Hz); GEHE 6 to 7.5 tons (50 Hz)

GEH (60 Hz)	GEH (50 Hz)	A	B	C	D
72	—	36-1/8 in.	17 in.	8 in.	1-1/4 in.
90	72	36-1/8 in.	13-3/4 in.	7-3/4 in.	1-1/4 in.
120	90	36-1/8 in.	13 in.	7-1/4 in.	1-1/2 in.

Figure 59. Right return/back supply GEHE 12.5 to 15 tons (60 Hz); GEHE 10 to 12.5 tons (50 Hz)

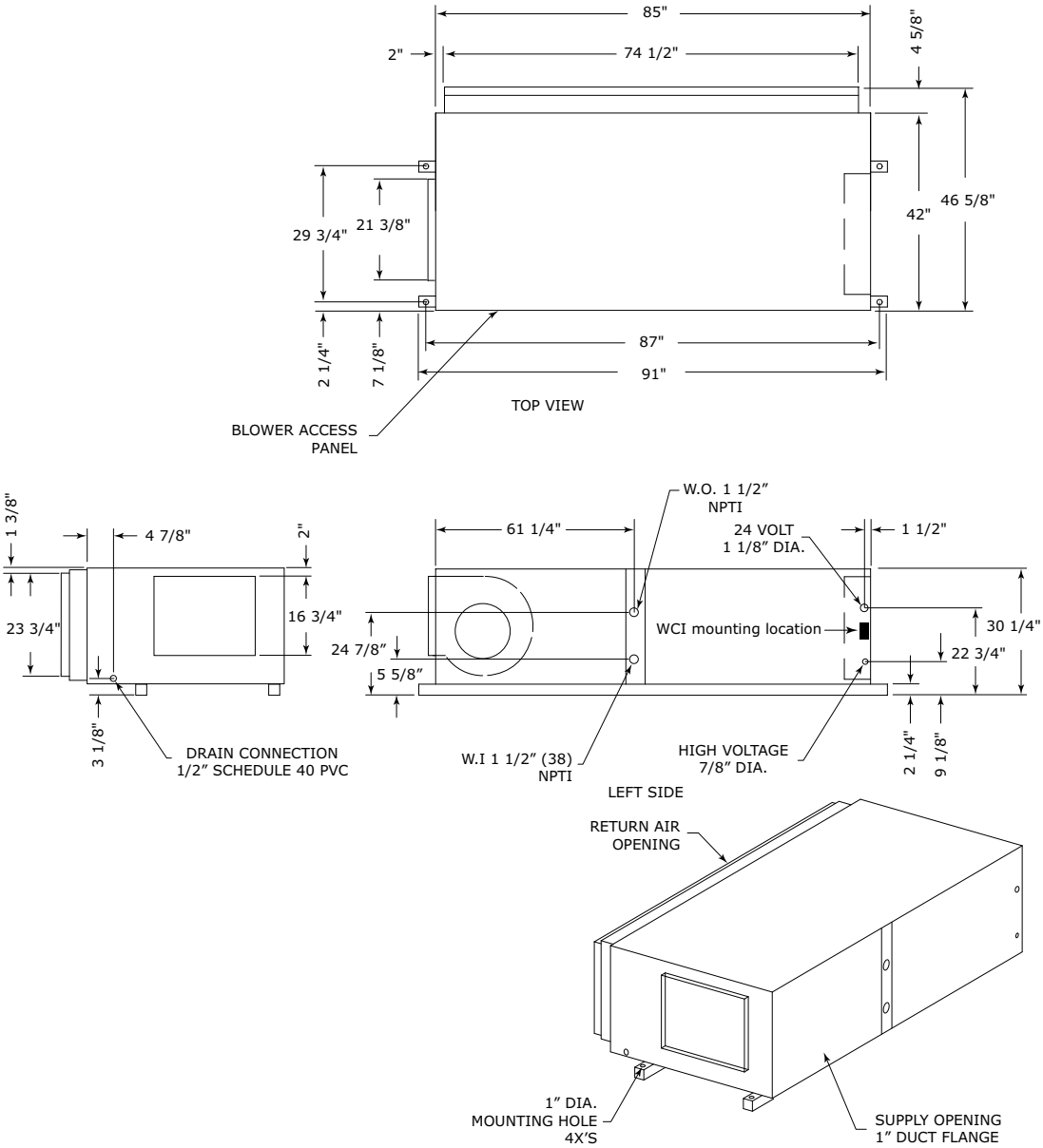

Figure 60. Left return/right supply GEHE 12.5 to 15 tons (60 Hz); GEHE 10 to 12.5 tons (50 Hz)

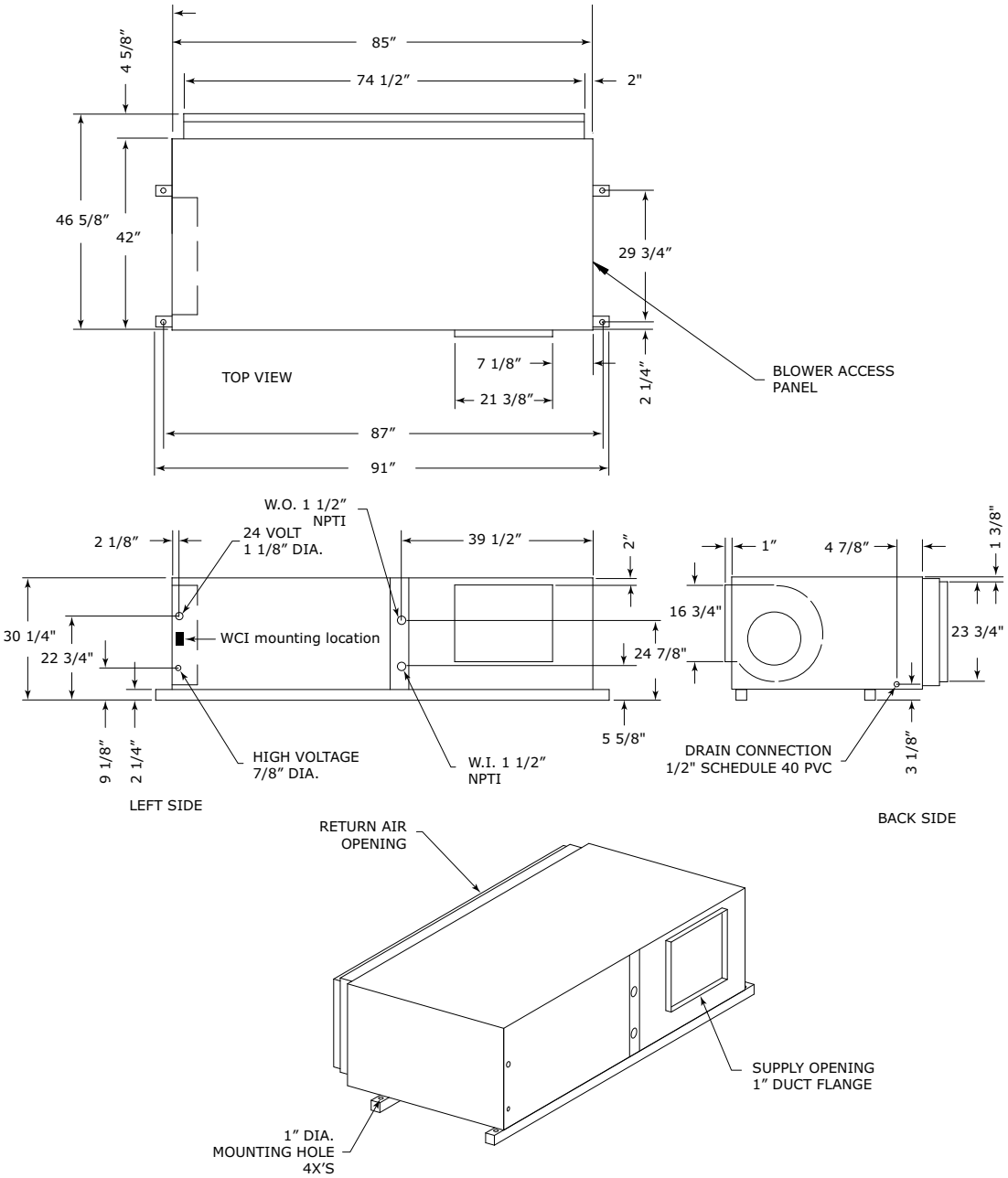

Figure 61. Left return/back supply GEHE 12.5 to 15 tons (60 Hz); GEHE 10 to 12.5 tons (50 Hz)

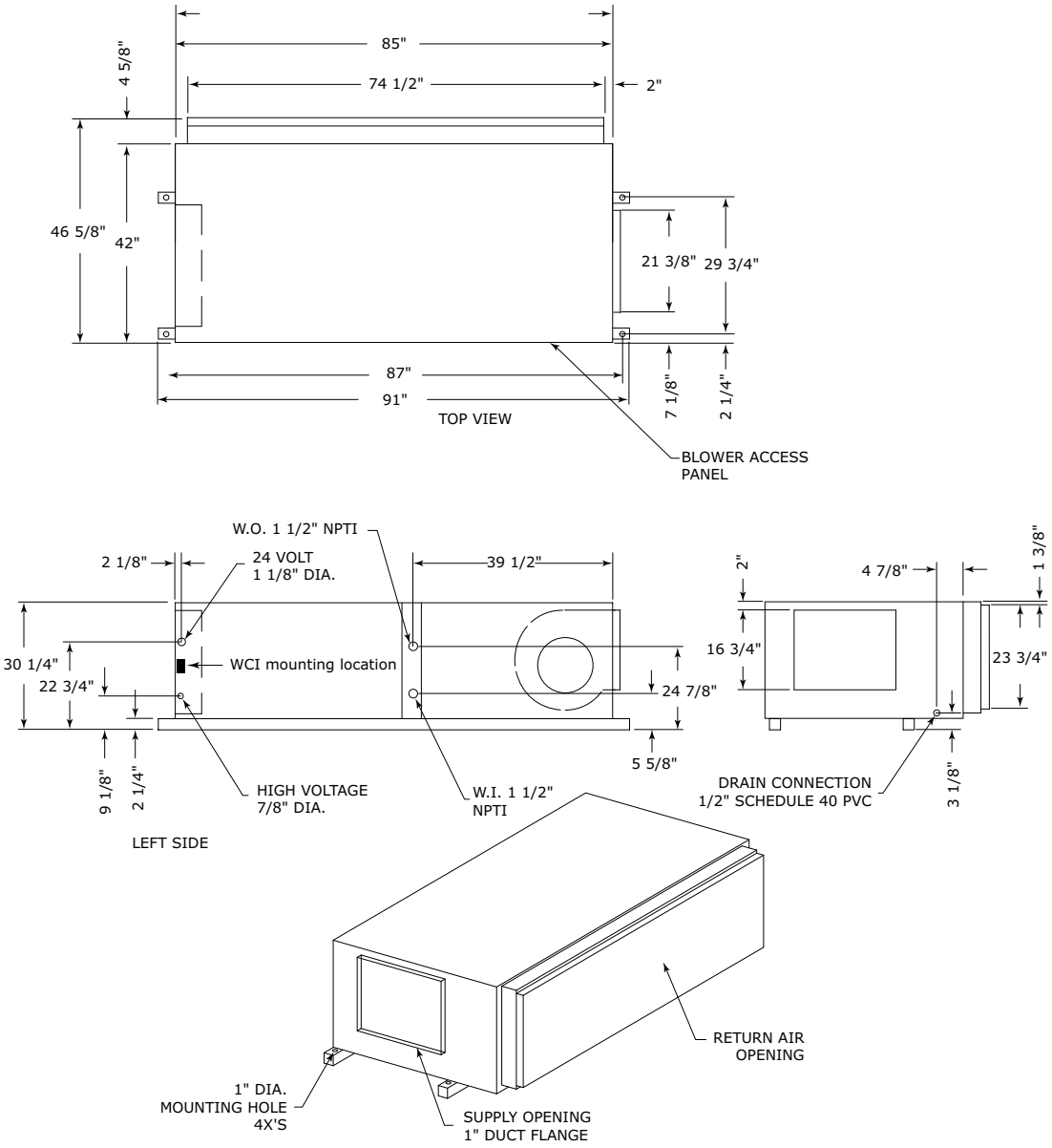

Figure 62. Front return/back supply[26] GEVE 6 to 10 tons (60 Hz); 6 and 7.5 tons (50 Hz)

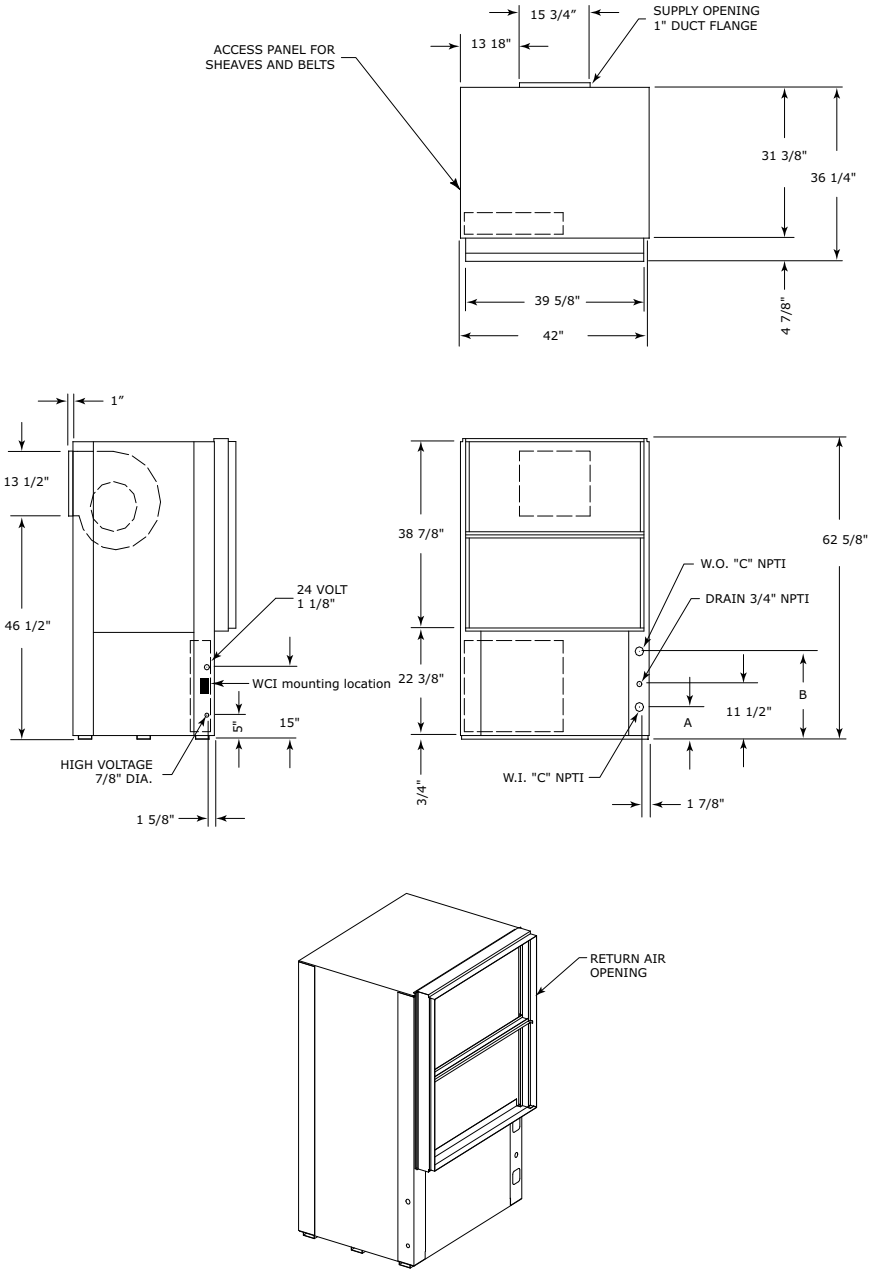

Table 218. Dimensional data front return/back supply GEVE 6 to 10 tons (60 Hz); 6 and 7.5 tons (50 Hz)

Unit (60 Hz)	Unit (50 Hz)	A	B	C
6.0 tons	—	6-5/8 in.	18-3/8 in.	1-1/4 in.
7.5 tons	6.0 tons	6-5/8 in.	18-3/8 in.	1-1/4 in.
10.0 tons	7.5 tons	6-1/2 in.	18-1/2 in.	1-1/2 in.

[26] *NEC requires that the GEV072-300 front return must be a non-ducted return.*

Figure 63. Front return/top supply[27] GEVE 6 to 10 tons (60 Hz); 6 and 7.5 tons (50 Hz)

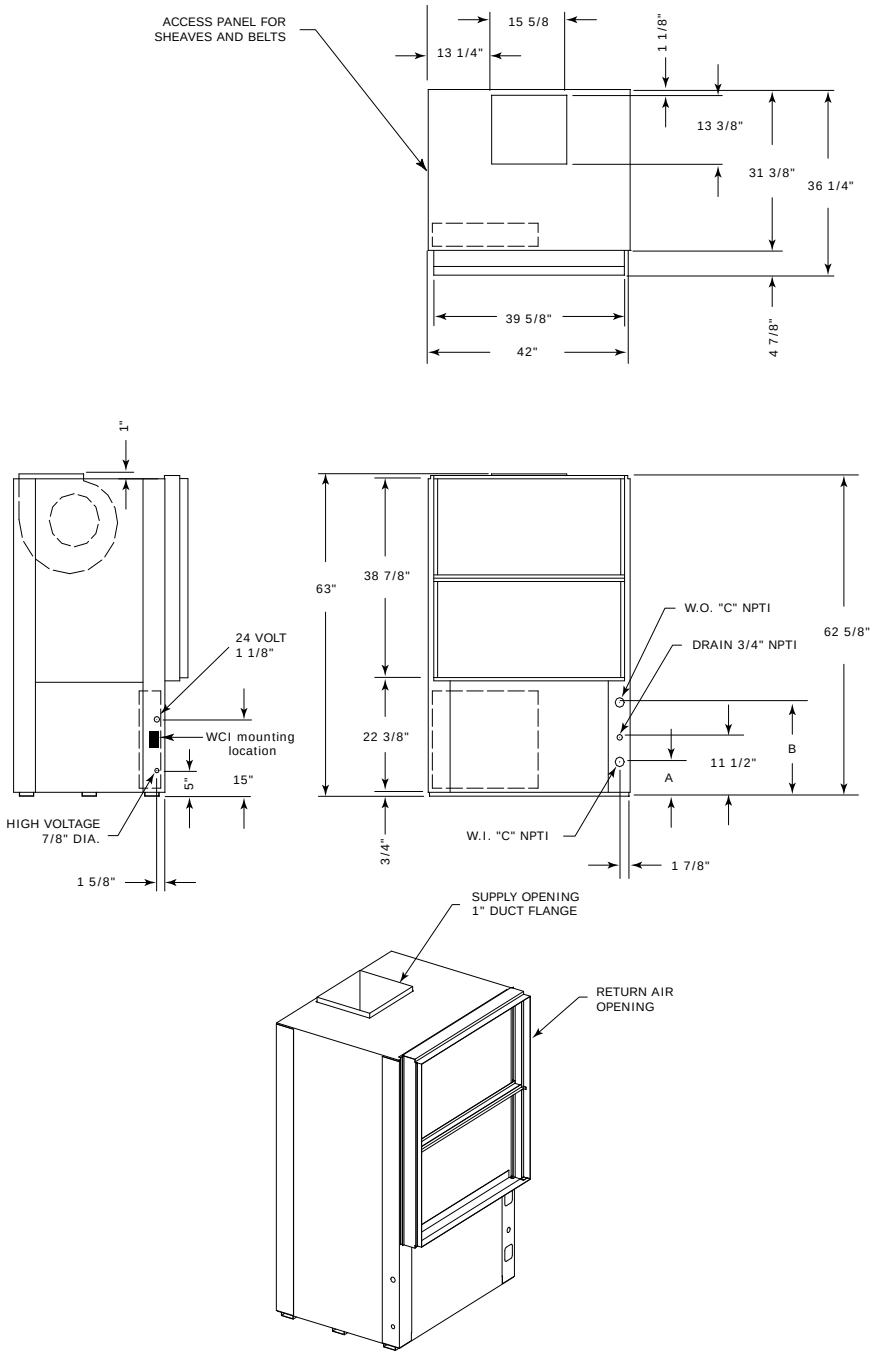

Table 219. Dimensional data front return/top supply GEVE 6 to 10 tons (60 Hz); 6 and 7.5 tons (50 Hz)

Unit (60 Hz)	Unit (50 Hz)	A	B	C
6.0 tons	—	6-5/8 in.	18-3/8 in.	1-1/4 in.
7.5 tons	6.0 tons	6-5/8 in.	18-3/8 in.	1-1/4 in.
10.0 tons	7.5 tons	6-1/2 in.	18-1/2 in.	1-1/2 in.

[27] *NEC requires that the GEV072-300 front return must be a non-ducted return.*

Figure 64. Back return/front supply[28] GEVE 6 to 10 tons (60 Hz); 6 and 7.5 tons (50 Hz)

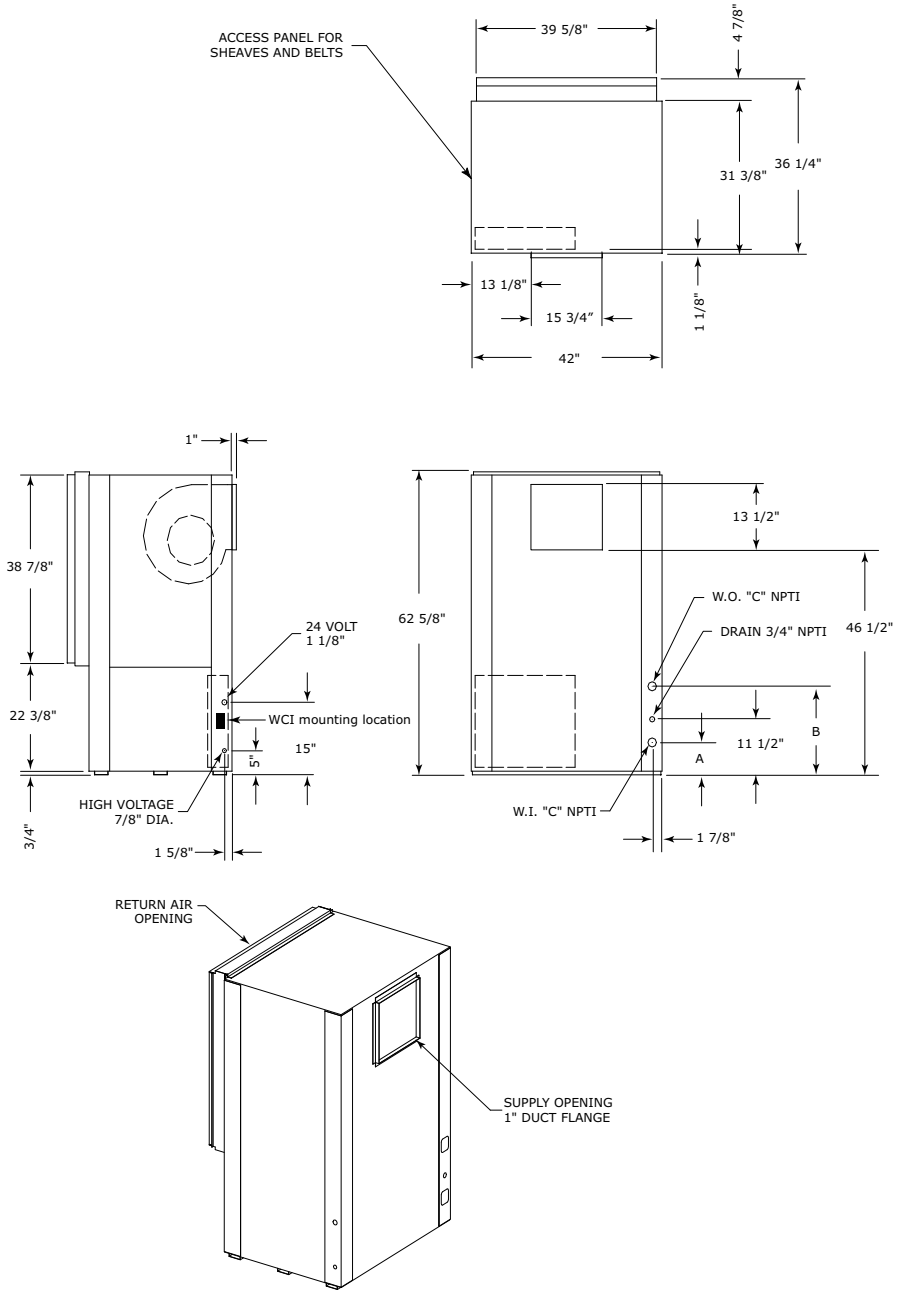

Table 220. Dimensional data back return/front supply GEVE 6 to 10 tons (60 Hz); 6 and 7.5 tons (50 Hz)

Unit (60 Hz)	Unit (50 Hz)	A	B	C
6.0 tons	—	6-5/8 in.	18-3/8 in.	1-1/4 in.
7.5 tons	6.0 tons	6-5/8 in.	18-3/8 in.	1-1/4 in.
10.0 tons	7.5 tons	6-1/2 in.	18-1/2 in.	1-1/2 in.

[28] *NEC requires that the GEV072-300 front return must be a non-ducted return.*

Figure 65. Back return/top supply[29] GEVE 6 to 10 tons (60 Hz); 6 and 7.5 tons (50 Hz)

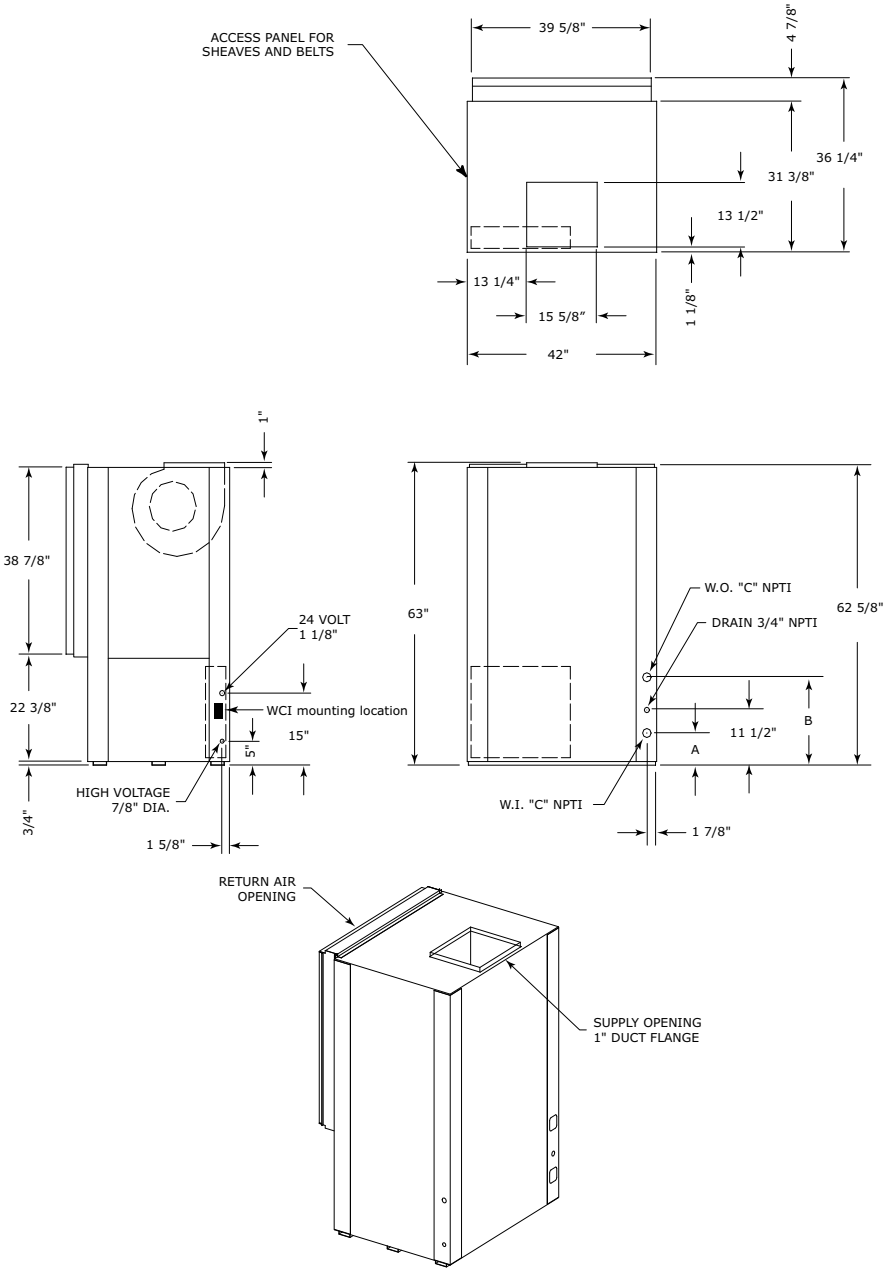

Table 221. Dimensional data back return/top supply GEVE 6 to 10 tons (60 Hz); 6 and 7.5 tons (50 Hz)

Unit (60 Hz)	Unit (50 Hz)	A	B	C
6.0 tons	—	6-5/8 in.	18-3/8 in.	1-1/4 in
7.5 tons	6.0 tons	6-5/8 in.	18-3/8 in.	1-1/4 in.
10.0 tons	7.5 tons	6-1/2 in.	18-1/2 in.	1-1/2 in.

[29] *NEC requires that the GEV072-300 front return must be a non-ducted return.*

Figure 66. Front return/back supply[30] GEVE 12.5 to 15 tons (60 Hz); GEV 10 and 12.5 tons (50 Hz)

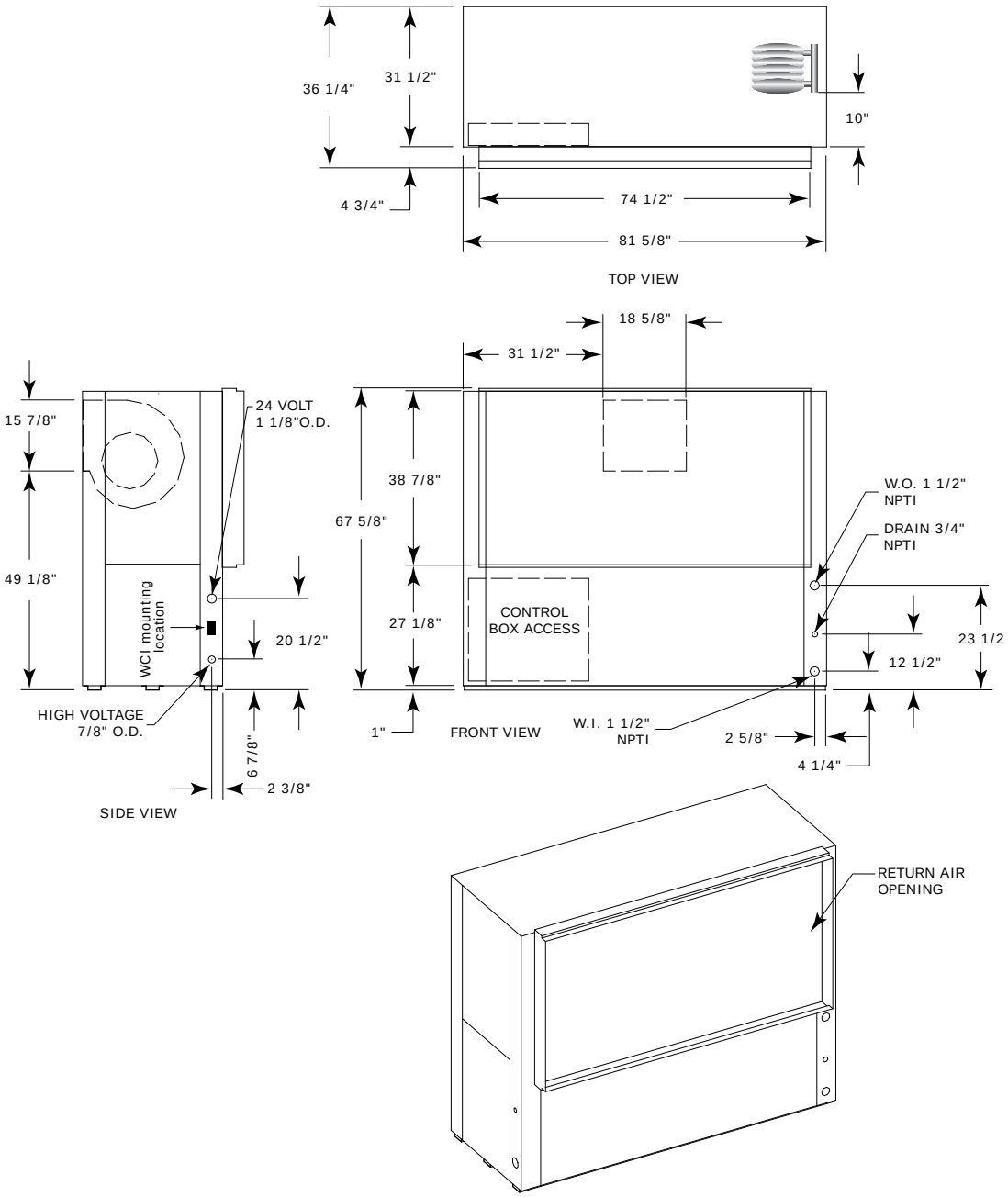

30. *NEC requires that the GEV072-300 front return must be a non-ducted return.*

Figure 67. Back return/front supply GEVE 12.5 to 15 tons (60 Hz); GEVE 10 and 12.5 tons (50 Hz)

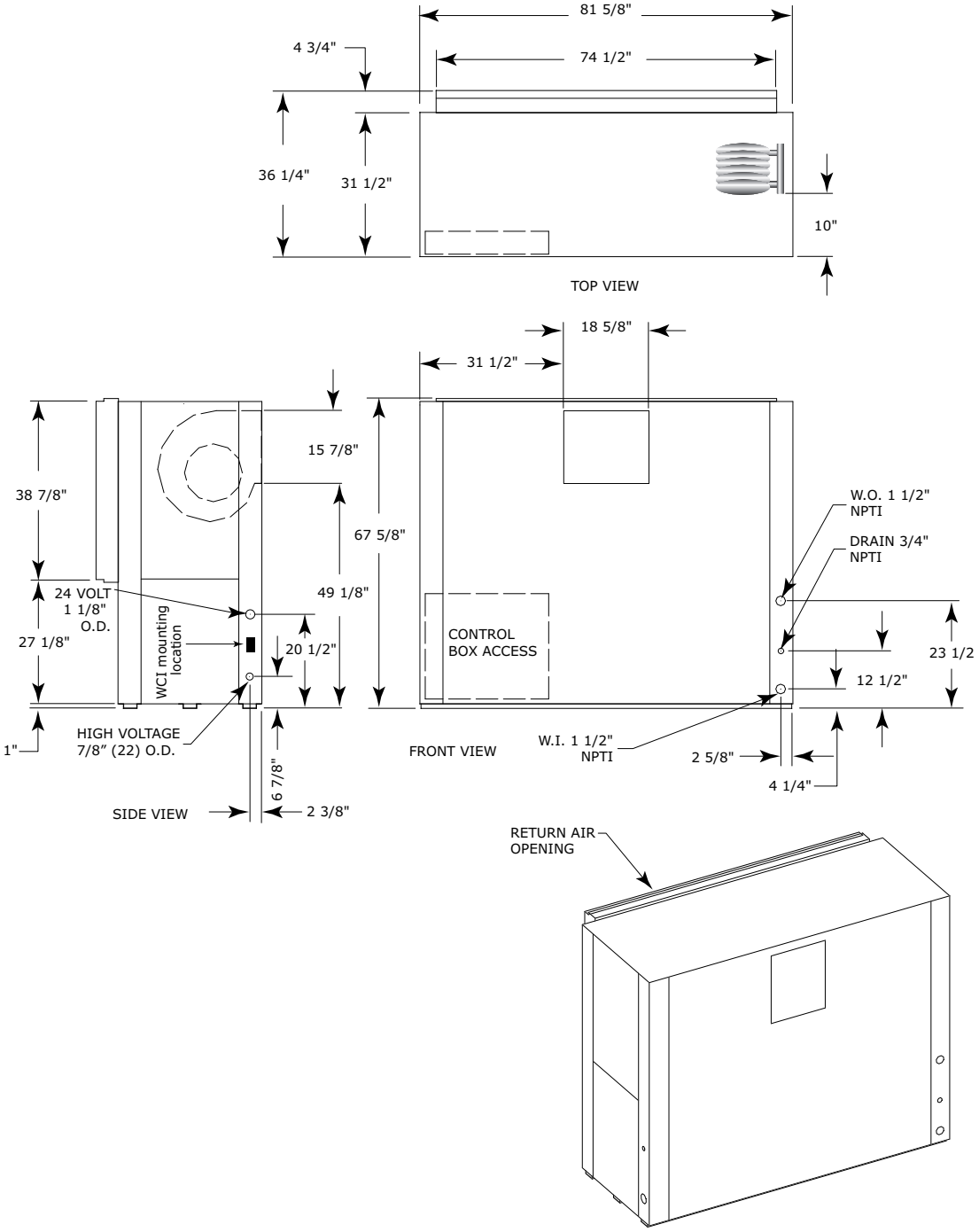

Figure 68. Front return/top supply[31] GEVE 12.5 to 15 tons (60 Hz); GEVE 10 and 12.5 tons (50 Hz)

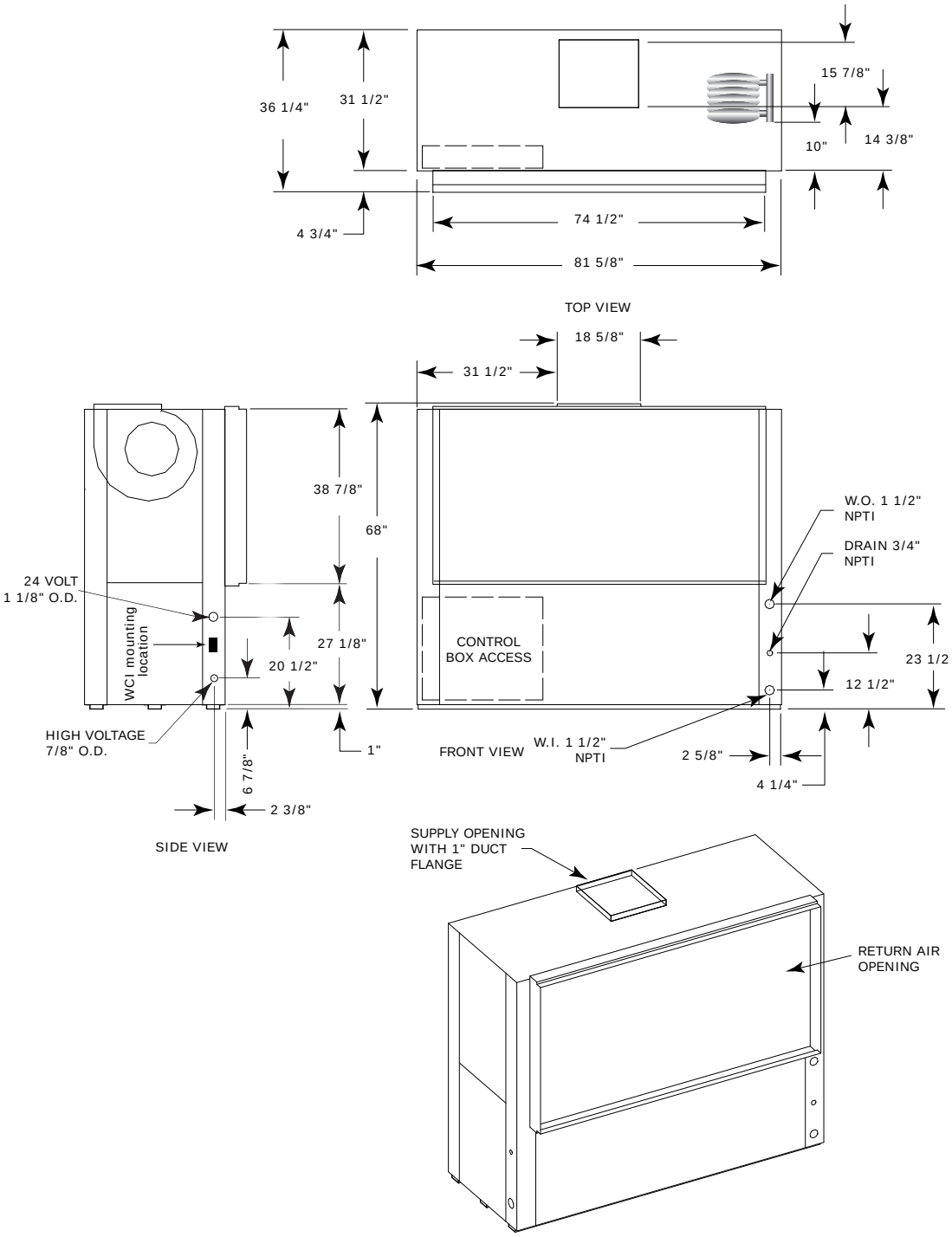

[31] *NEC requires that the GEV072-300 front return must be a non-ducted return.*

Figure 69. Back return/top supply[32] GEVE 12.5 to 15 tons (60 Hz); GEVE 10 and 12.5 tons (50 Hz)

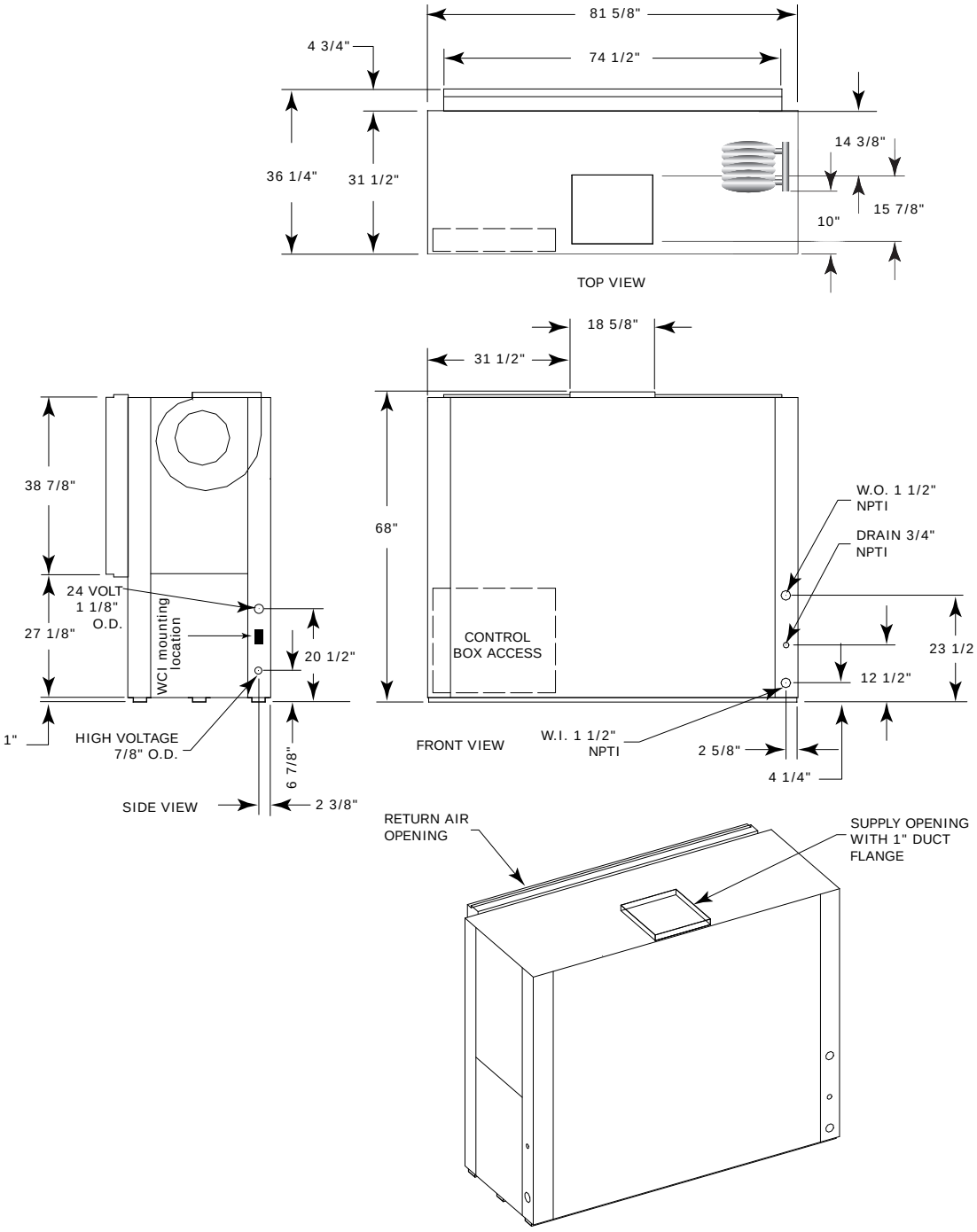

[32] *NEC requires that the GEV072-300 front return must be a non-ducted return.*

Figure 70. Front return/back supply[33] GEVE 20 and 25 tons (60 Hz); GEVE 15 and 20 tons (50 Hz)

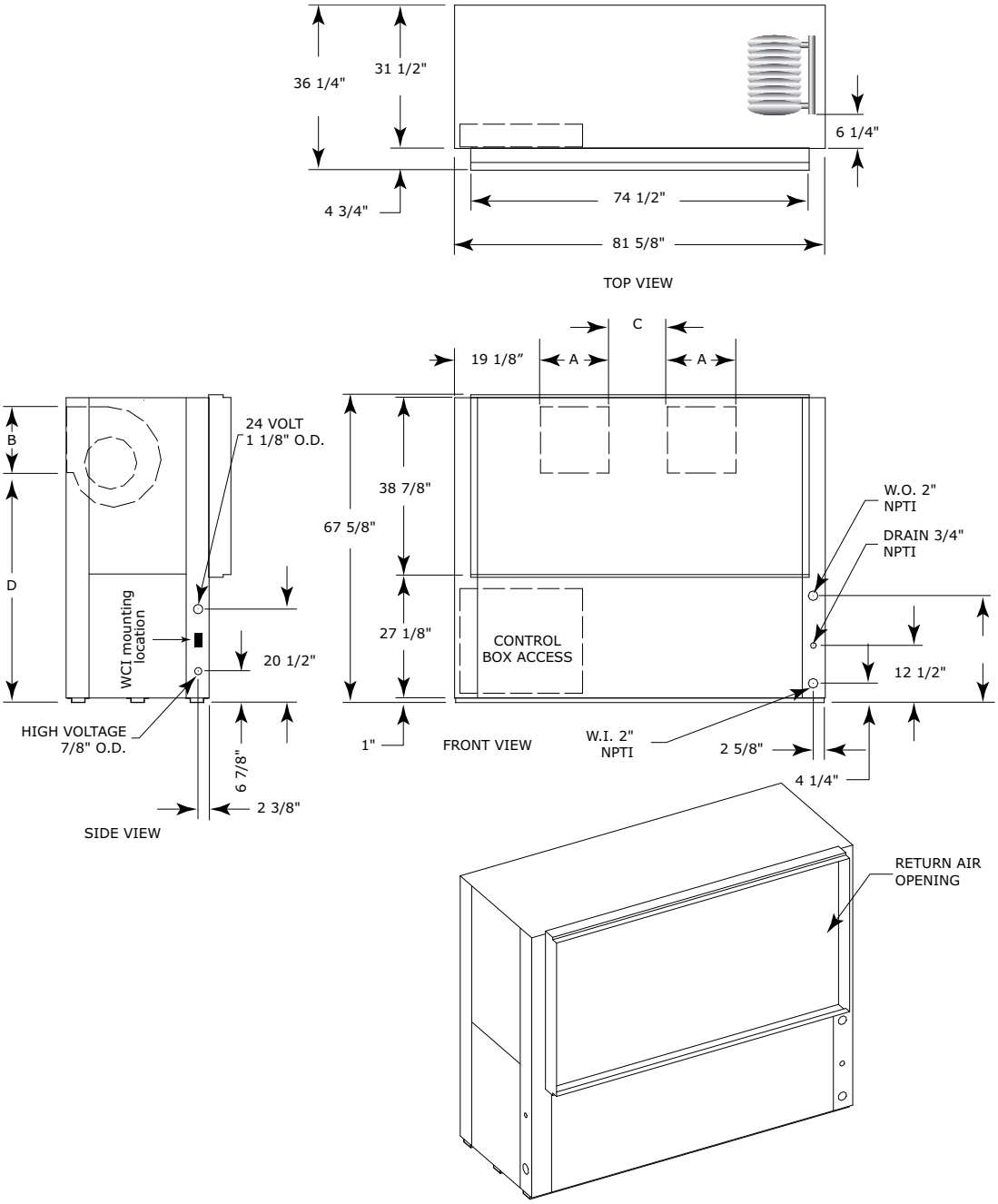

Table 222. Dimensional data front return/back supply GEVE 20 and 25 tons (60 Hz); GEVE 15 and 20 tons (50 Hz)

Unit (60 Hz)	Unit (50 Hz)	A	B	C	D	E
20 tons	15 tons	15-5/8 in.	13-1/2 in.	12 in.	51-5/8 in.	20-7/8 in.
25 tons Std Static	20 tons Std Static	14-3/4 in.	15-7/8 in.	13-7/8 in.	49-1/8 in.	23-1/2 in.
25 tons High Static	20 tons High Static	15-5/8 in.	13-1/2 in.	12 in.	51-5/8 in.	23-1/2 in.

[33] *NEC requires that the GEV072-300 front return must be a non-ducted return.*

Figure 71. Back return/front supply[34] GEVE 20 and 25 tons (60 Hz); GEVE 15 and 20 tons (50 Hz)

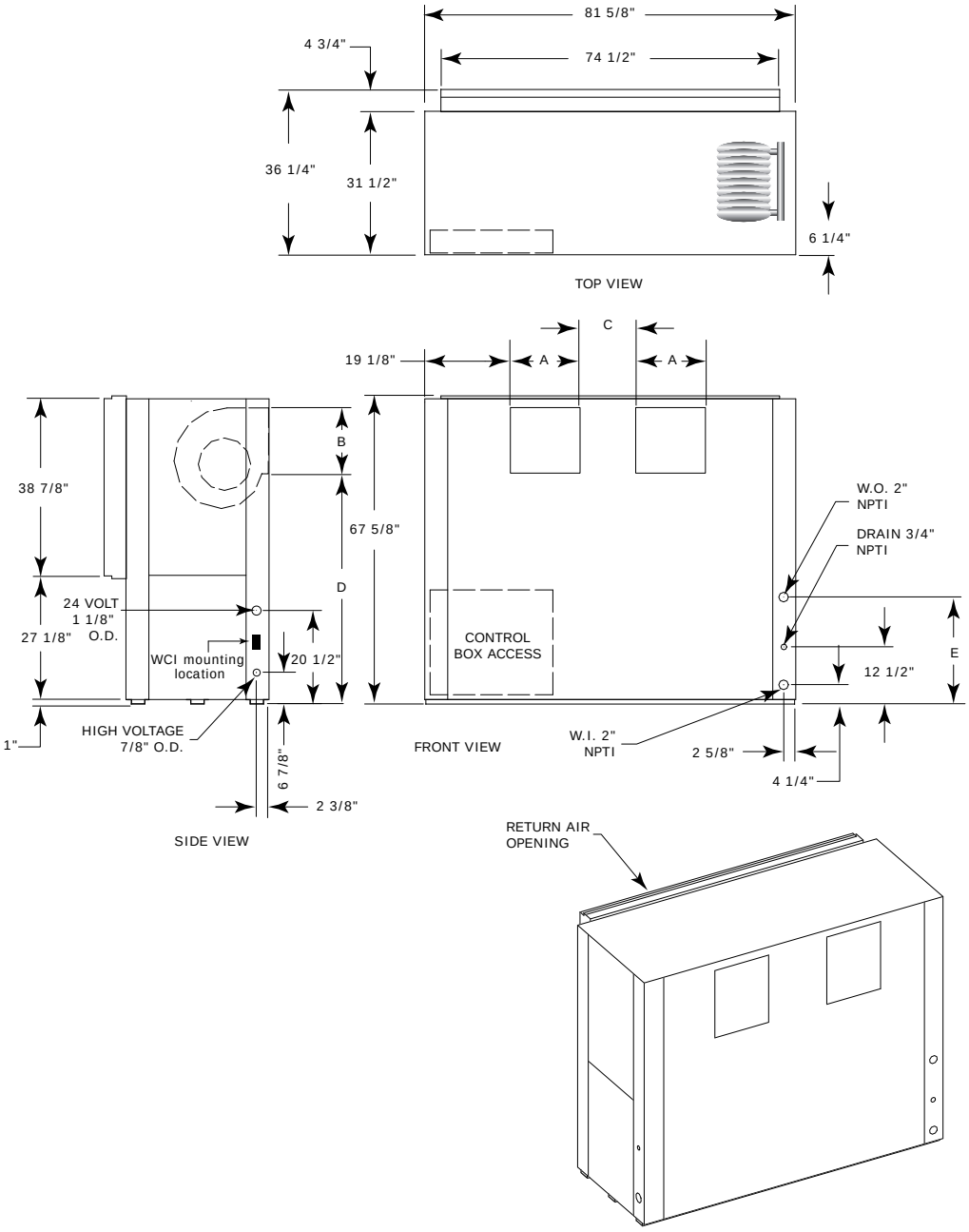

Table 223. Dimensional data back return/front supply GEVE 20 and 25 tons (60 Hz); GEVE 15 and 20 tons (50 Hz)

Unit (60 Hz)	Unit (50 Hz)	A	B	C	D	E
20 tons	15 tons	15-5/8 in.	13-1/2 in.	12 in.	51-5/8 in.	20-7/8 in.
25 tons Std Static	20 tons Std Static	14-3/4 in.	15-7/8 in.	13-7/8 in.	49-1/8 in.	23-1/2 in.
25 tons High Static	20 tons High Static	15-5/8 in.	13-1/2 in.	12 in.	51-5/8 in.	23-1/2 in.

[34] *NEC requires that the GEV072-300 front return must be a non-ducted return.*

Figure 72. Front return/top supply[35] GEVE 20 and 25 tons (60 Hz); GEVE 15 and 20 tons (50 Hz)

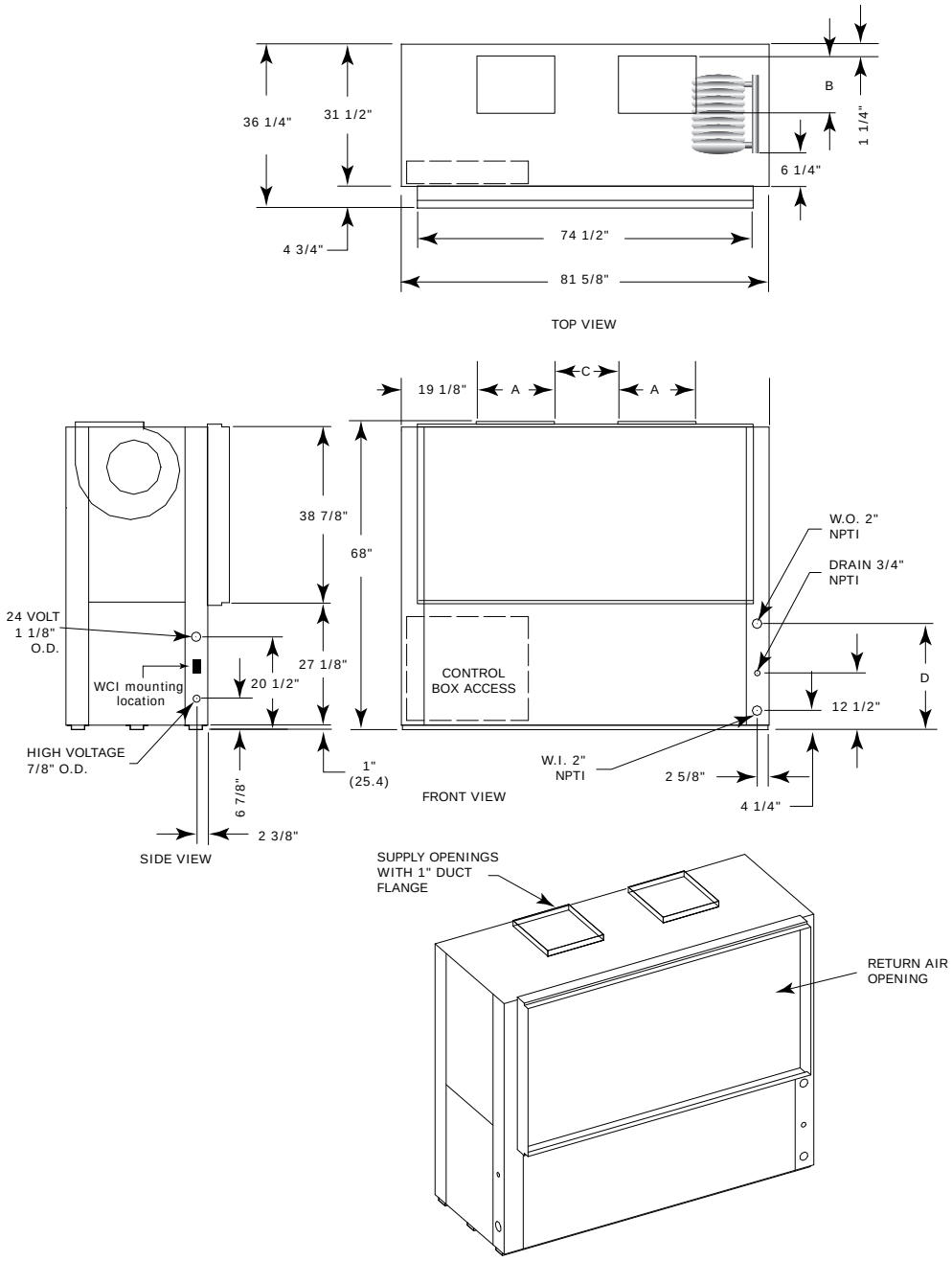

Table 224. Dimensional data front return/top supply GEVE 20 and 25 tons (60 Hz); GEVE 15 and 20 tons (50 Hz)

Unit (60 Hz)	Unit (50 Hz)	A	B	C	D
20 tons	15 tons	15-5/8 in.	13-1/2 in.	12 in.	20-7/8 in.
25 tons Std Static	20 tons Std Static	14-3/4 in.	15-7/8 in.	13-7/8 in.	23-1/2 in.
25 tons High Static	20 tons High Static	15-5/8 in.	13-1/2 in.	12 in.	23-1/2 in.

[35] *NEC requires that the GEV072-300 front return must be a non-ducted return.*

Figure 73. Back return/top supply[36] GEVE 20 and 25 tons (60 Hz); GEVE 15 and 20 tons (50 Hz)

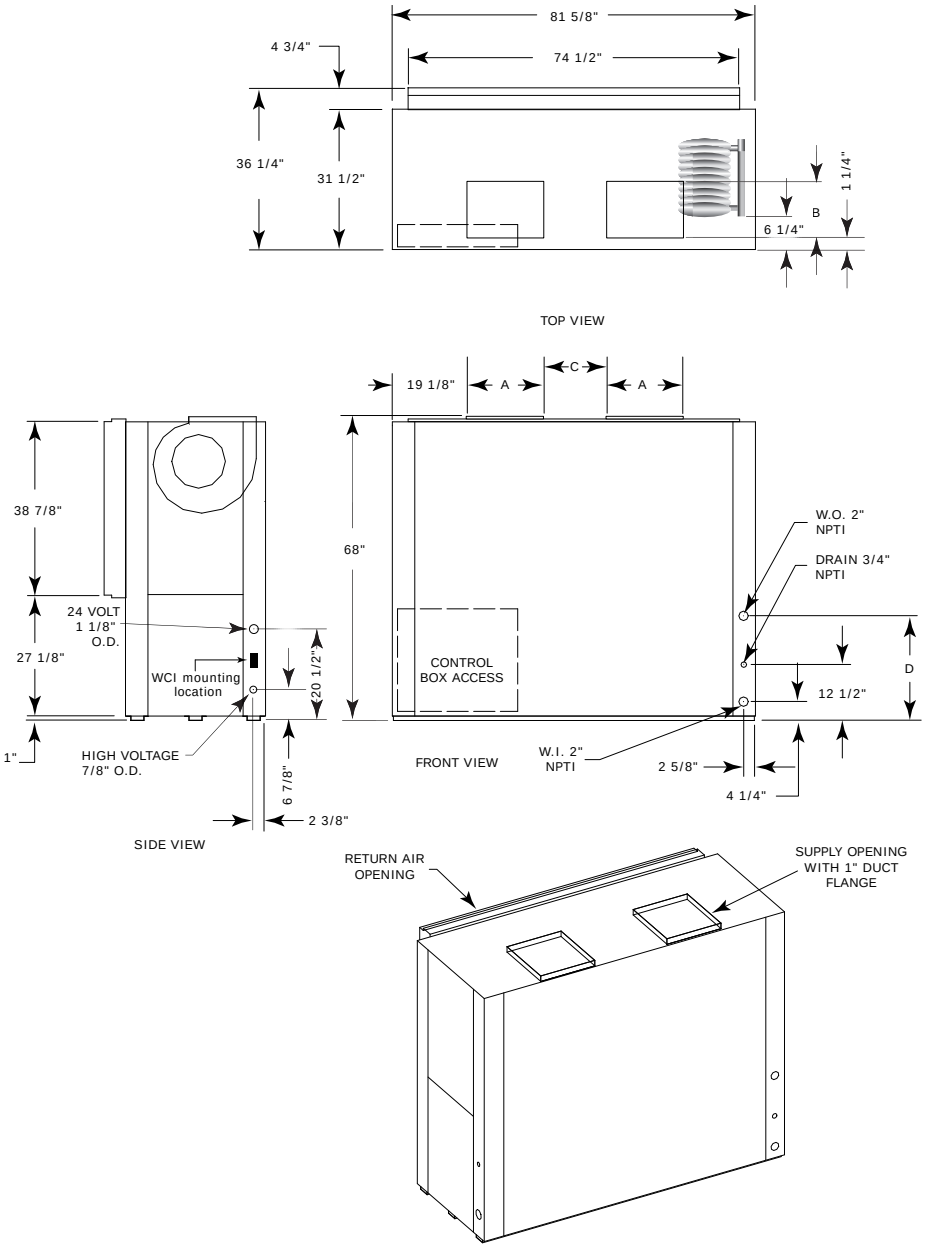

Table 225. Dimensional data back return/top supply GEVE 20 and 25 tons (240 and 300) 60 Hz; GEVE 15 and 20 tons (180 and 240) 50 Hz

Unit (60 Hz)	Unit (50 Hz)	A	B	C	D
20 tons	15 tons	15-5/8 in.	13-1/2 in.	12 in.	20-7/8 in.
25 tons Std Static	20 tons Std Static	14-3/4 in.	15-7/8 in.	13-7/8 in.	23-1/2 in.
25 tons High Static	20 tons High Static	15-5/8 in.	13-1/2 in.	12 in.	23-1/2 in.

[36] *NEC requires GEV072-300 front return must be non-ducted return.*

Figure 74. Waterside economizer[37] (GEHE)

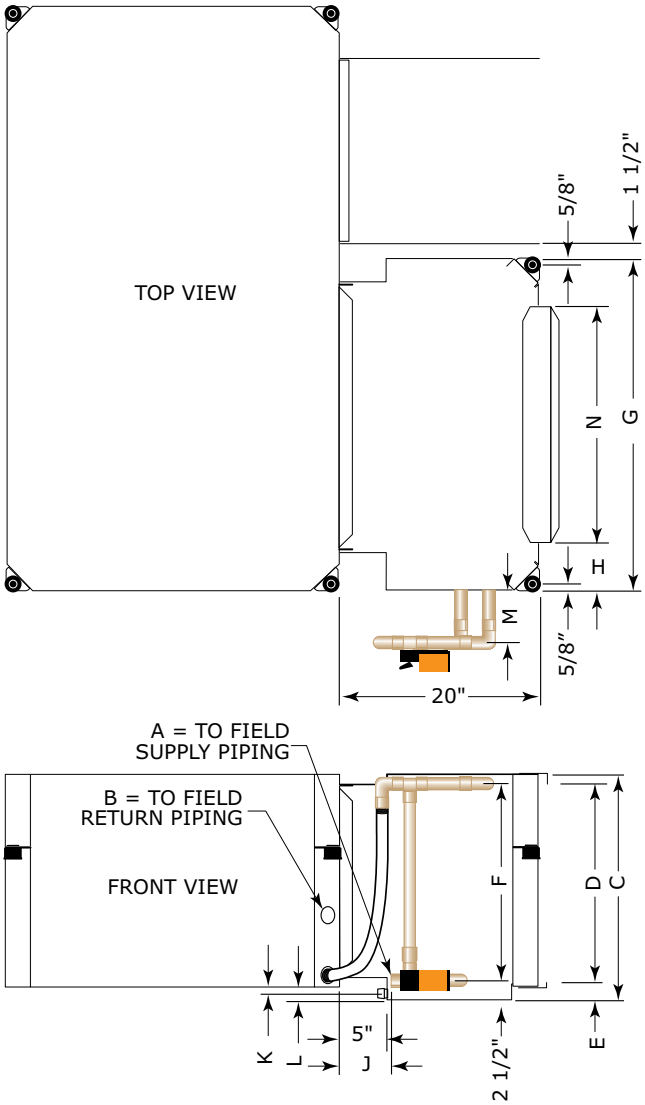

Table 226. Dimensional data waterside economizer (GEHE)

GEH (60 Hz)	GEH (50 Hz)	A NPTI	B NPTI	C	D	E	F	G	H	J	K	L	M	N
006-015	006-012	1/2	1/2	16-7/8	13-1/2	2-3/4	10	23-1/2	2-1/2	6-1/2	1	1-7/8	4	18-1/2
018-030	015-024	3/4	3/4	20-7/8	16-5/8	3-1/4	14	25-1/2	3-1/2	6-3/8	2	3	4	18-1/2
035-042	030-036	3/4	3/4	20-7/8	17-1/2	2-1/4	14	29-1/2	2-1/4	6-3/8	1-1/8	2	4	23-1/2
048-060	042-060	1	1	22-7/8	19-5/8	2-3/4	16-1/2	33-1/2	5	6-1/8	1-1/8	2	4-3/8	23-1/2

[37] *Waterside economizer installation requires field piping.*

Figure 75. Waterside economizer (GEVG)

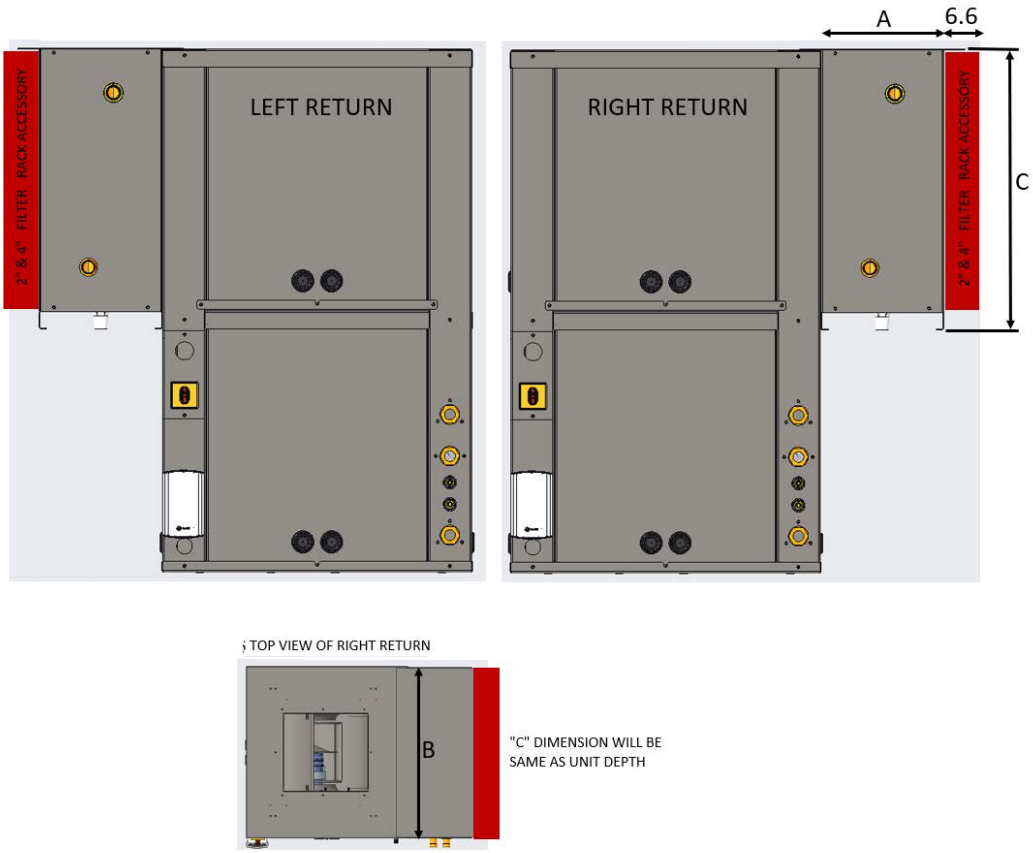

Table 227. Dimensional data waterside economizer (GEVG)

Unit	Cabinet	WSE Dimensions		
		A (Width)	B (Depth)	C (Height)
GEVG006-012	A	8.5	19.0	16.25
GEVG015-018	B	8.5	21.5	18.25
GEVG024-030	C	8.5	23.0	19.25
GEVG036-042	D	8.5	26.0	22.25
GEVG048-060	E	8.5	32.5	22.25

Figure 76. Waterside economizer (GEVG)

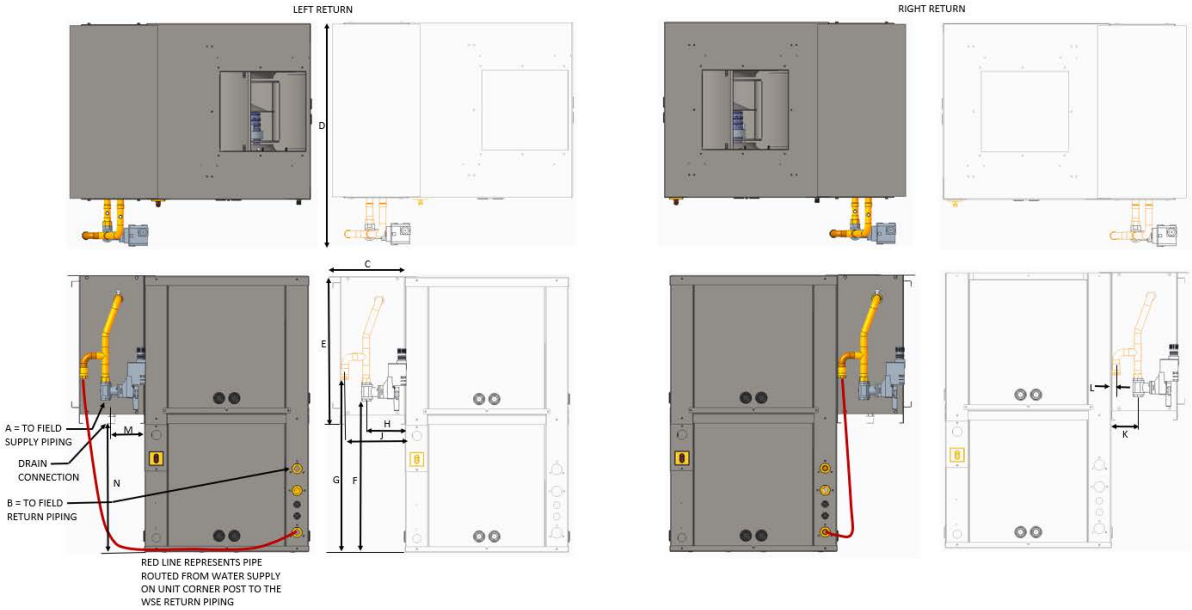

Table 228. Dimensional data waterside economizer (GEVG)

Unit	Cabinet	Pipe Size		WSE Size			Piping Location						Drain	
		A NPTI	B NPTI	C Width	D Depth	E Height	F Height	G Height	H Width	J Width	K Width	L Width	M Width	N Height
GEVG006-012	A	1/2	1/2	8.5	25.0	16.25	15.75	18.75	5.0	7.5	3.5	0.75	4.25	13.75
GEVG015-018	B	1/2	1/2	8.5	27.5	18.25	17.75	20.75	5.0	7.88	3.5	0.63	4.25	15.75
GEVG024-030	C	3/4	3/4	8.5	29.0	19.25	19.75	22.75	5.0	7.88	3.5	0.63	4.25	16.75
GEVG036-042	D	3/4	3/4	8.5	32.0	21.75	21.75	24.75	5.0	7.88	3.5	0.63	4.25	15.75
GEVG048-060	E	1	1	8.5	38.5	22.75	22.75	25.75	5.0	8	3.5	0.5	4.25	19.75

Figure 77. Hanging unit waterside economizer (GEHE)

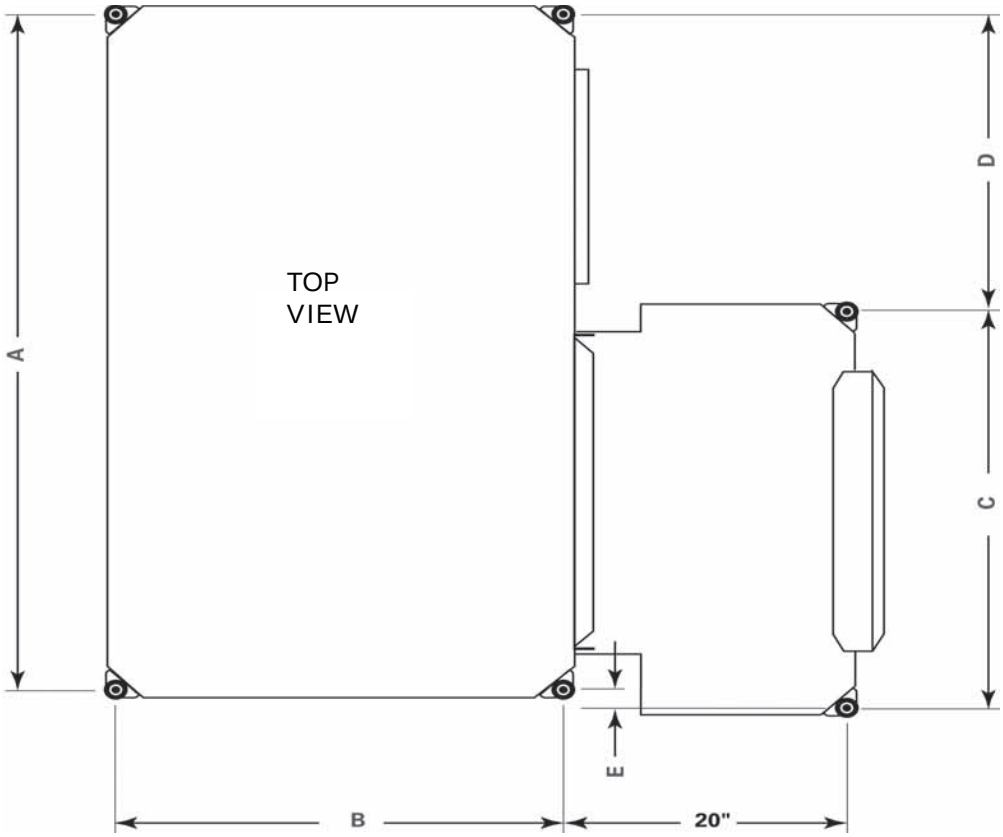

Table 229. Dimensional data hanging unit waterside economizer (GEH)

GEH Unit (60 Hz)	GEH Unit (50 Hz)	A	B	C	D	E	Hanging Weight	Shipping Weight
006-015	006-012	38-3/4	18-3/4	22-1/8	17-1/2	7/8	44 lbs	95 lbs
018-030	015-024	44-3/4	21-3/4	24-1/8	20-3/4	0	52 lbs	103 lbs
035-042	030-036	48-3/4	23-3/4	28-1/8	20-5/8	0	56 lbs	107 lbs
048-060	042-048	56-3/4	31-3/4	32-1/8	24-3/4	1/8	64 lbs	113 lbs

Figure 78. GEHE 6 to 10 tons (60 Hz), GEHE 6 to 7.5 tons (50 Hz) - right return with waterside economizer[38]

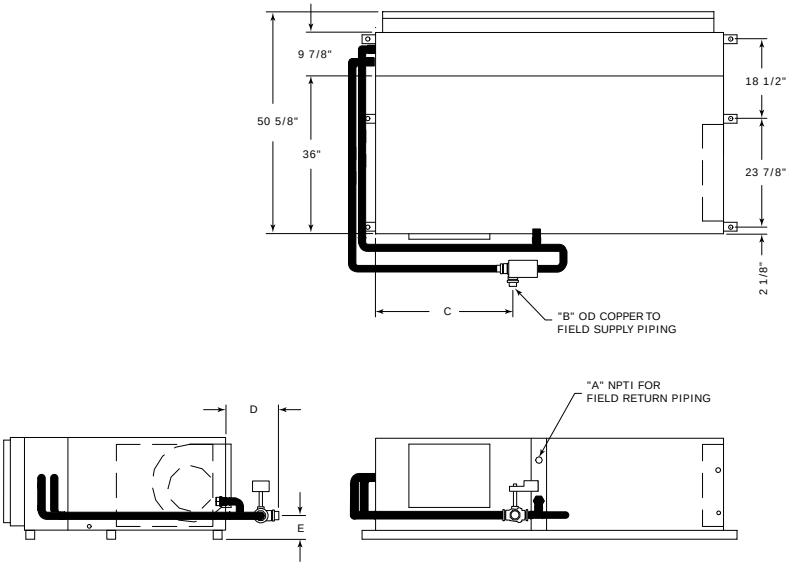

Figure 79. GEHE 6 to 10 tons (60 Hz), GEHE 6 to 7.5 tons (50 Hz) - left return with waterside economizer[38]

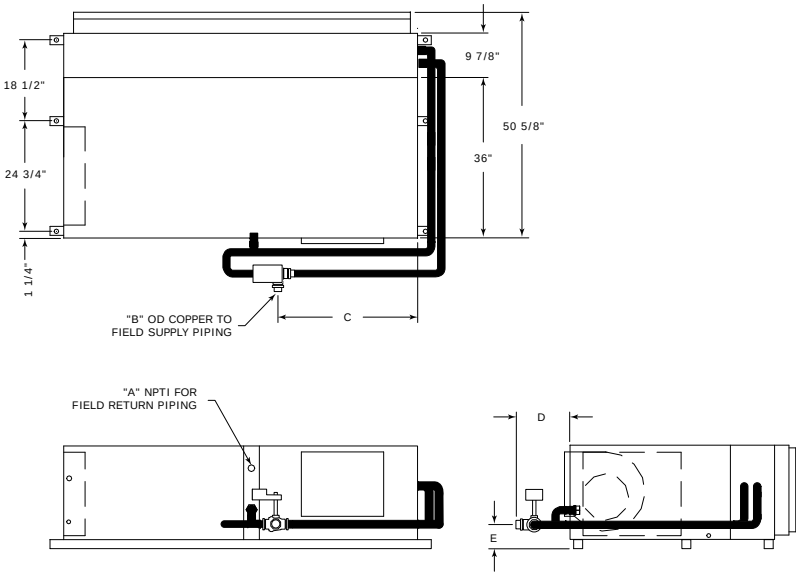

Table 230. Dimensional data GEHE 6 to 10 tons (60 Hz), GEHE 6 to 7.5 tons (50 Hz), waterside economizer

GEH (60 Hz)	GEH (50 Hz)	A	B	C	D	E	Hanging Weight	Shipping Weight
72	—	1-1/4	1-3/8	31	9-7/8	3-7/8	138 lbs	168 lbs
90	72	1-1/4	1-3/8	31	9-7/8	3-7/8	144 lbs	174 lbs
120	90	1-1/2	1-5/8	30-3/4	12-1/2	4-1/2	166 lbs	196 lbs

38. *Field piping required on waterside economizer.*

Figure 80. GEHE 12.5 to 15 tons (60 Hz), GEHE 10 to 12.5 tons (50 Hz), right return with waterside economizer[39]

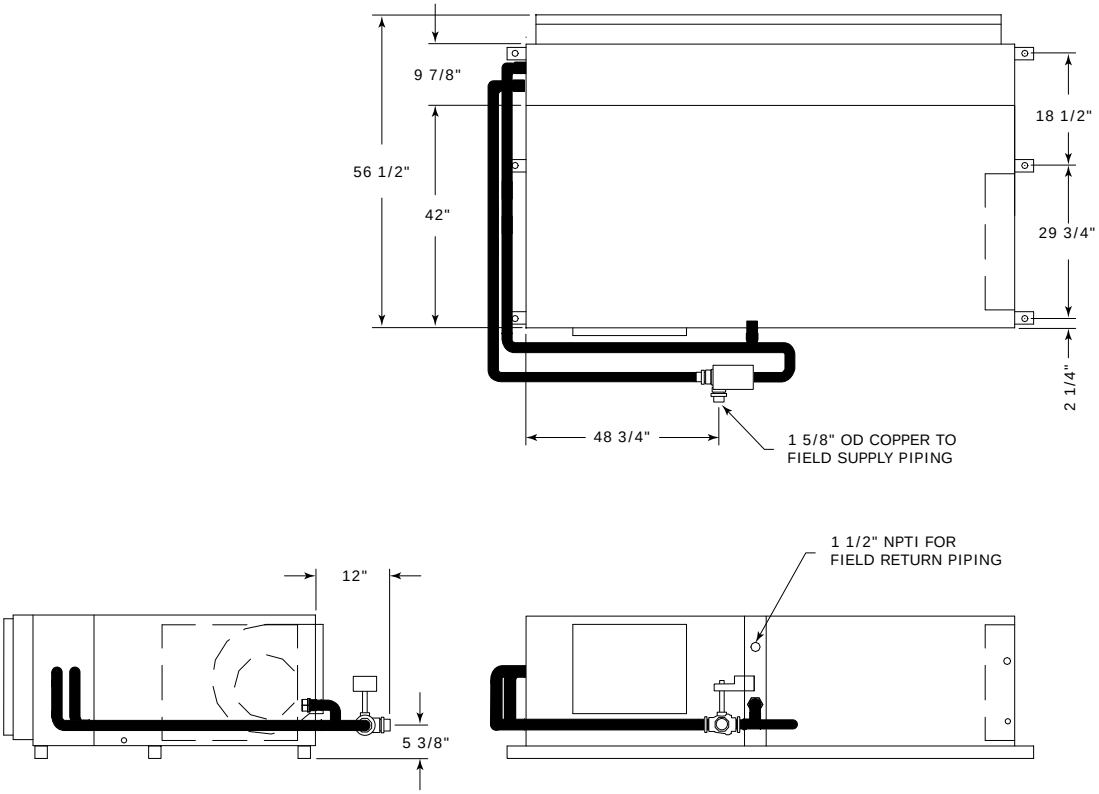

Table 231. Dimensional data GEHE 12.5 to 15 tons (60 Hz), GEHE 10 to 12.5 tons (50 Hz), right return with waterside economizer

GEHE (60 Hz)	GEHE (50 Hz)	Hanging Weight	Shipping Weight
150	120	138 lbs	168 lbs
180	150	144 lbs	174 lbs

[39] *Field piping required on waterside economizer.*

Figure 81. GEHE 12.5 to 15 tons (60 Hz), GEHE 10 to 12.5 tons (50 Hz), left return with waterside economizer[40]

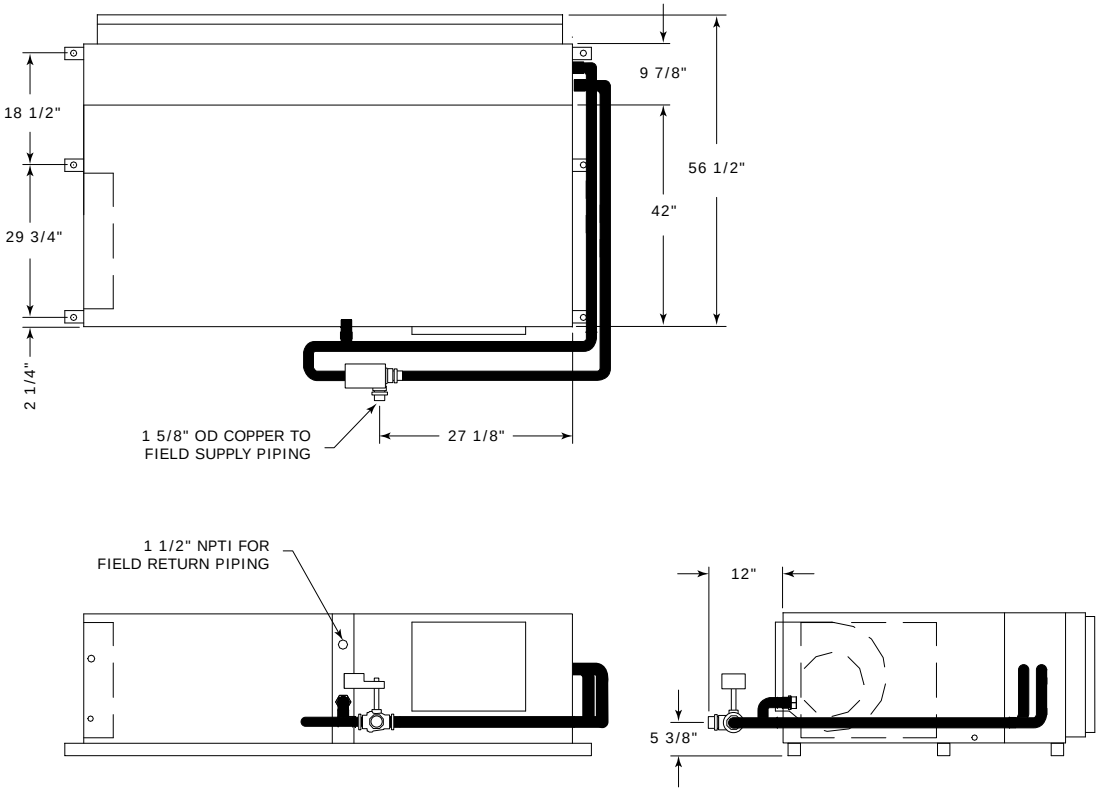

Table 232. Dimensional data GEHE 12.5 to 15 tons (60 Hz), GEHE 10 to 12.5 tons (50 Hz) - left return with waterside economizer

GEHE (60 Hz)	GEHE (50 Hz)	Hanging Weight	Shipping Weight
150 - 180	120-150	213 lbs	243 lbs

[40] *Field piping required on waterside economizer.*

Figure 82. GEVE 6 to 10 tons (60 Hz), 6 and 7.5 tons (50 Hz) - waterside economizer

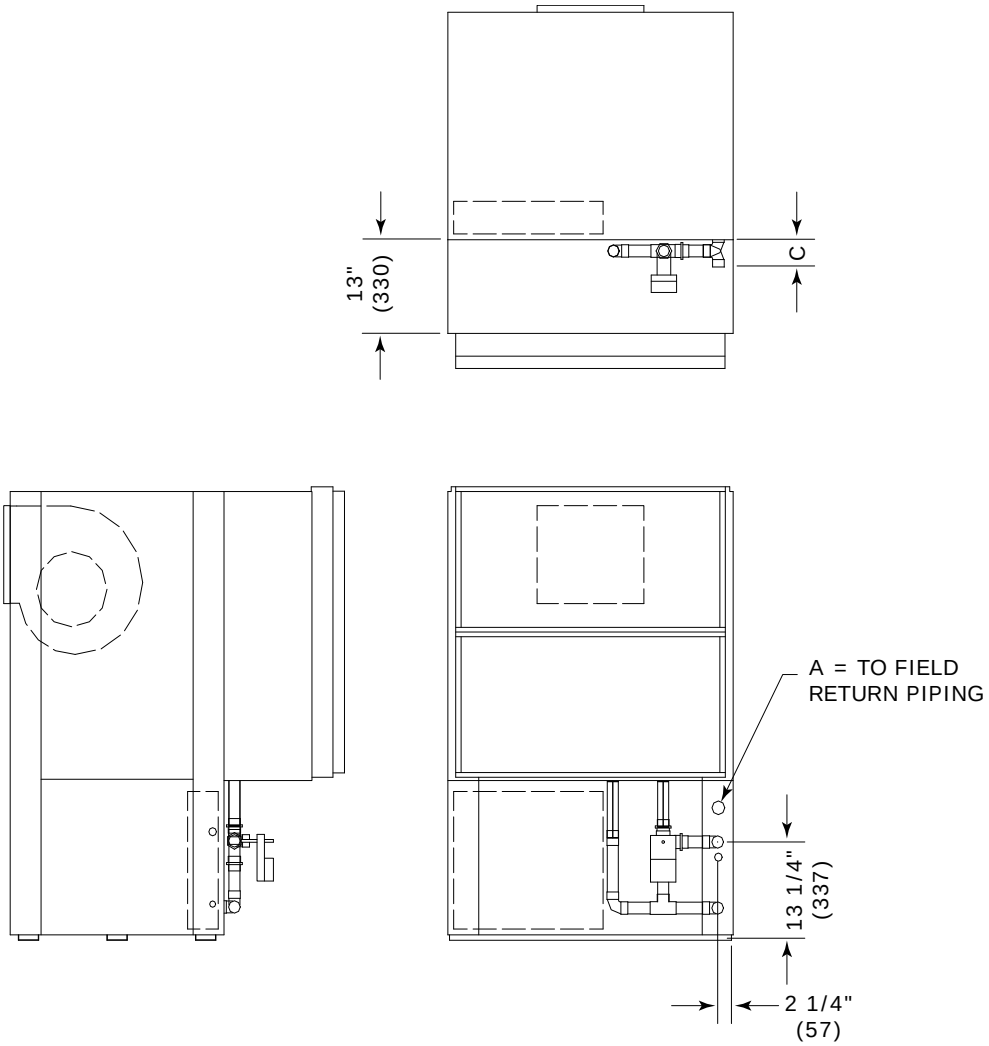

Table 233. Dimensional data GEVE 6 to 10 tons (60 Hz), 6 and 7.5 tons (50 Hz) - waterside economizer

Unit (60 Hz)	Unit (50 Hz)	A	B	C	Hanging Weight	Shipping Weight
72	—	1-1/4	1-3/8	4	148 lbs	178 lbs
90	72	1-1/4	1-1/4	4	168 lbs	198 lbs
120	90	1-1/2	1-5/8	4-3/8	207 lbs	237 lbs

Figure 83. GEVE 12.5 to 25 tons - waterside economizer

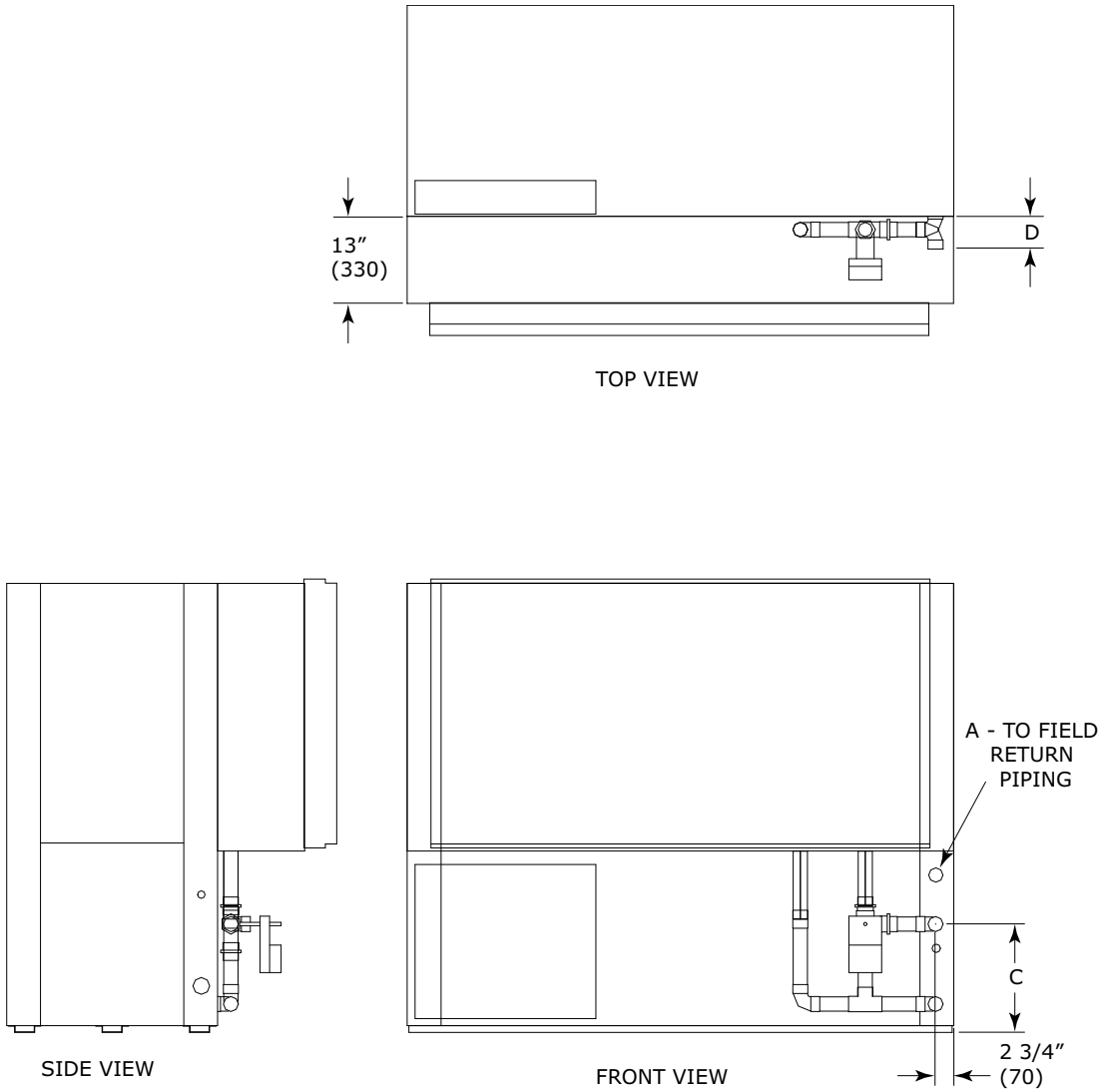

Table 234. Dimensional data GEVE 12.5 to 25 tons - waterside economizer

GEVE (60 Hz)	GEVE (50 Hz)	A - NPTI	B - I.D.	C	D	Hanging Weight	Shipping Weight
150-180	120-150	1-1/2	1-5/8	15-7/8	4-3/8	275 lbs	305 lbs
240	180	2	2-1/8	16-1/4	4-7/8	310 lbs	340 lbs
300	240	2	2-1/8	16-1/4	4-7/8	395 lbs	425 lbs

Figure 84. Waterside economizer coil piping diagram

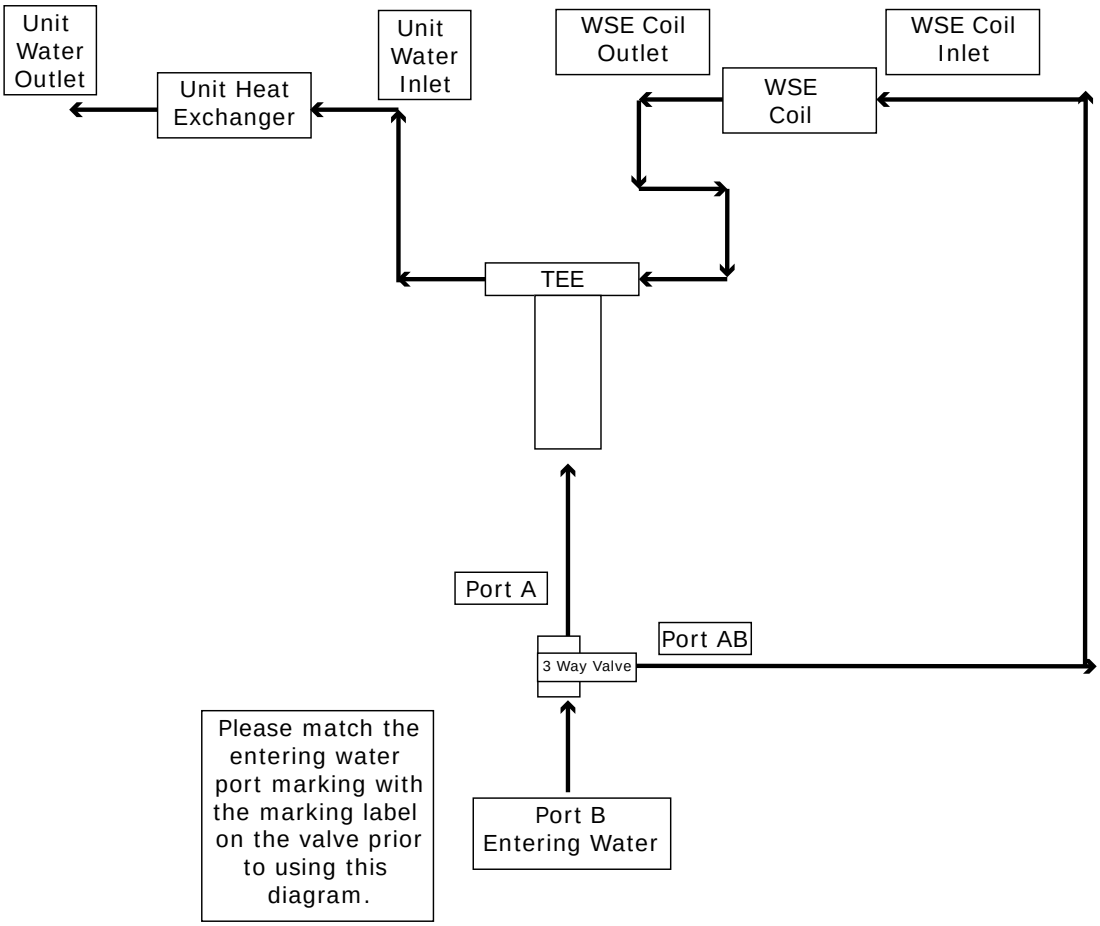

Mechanical Specifications

General

Equipment shall be completely assembled, piped, internally wired, fully charged with R-410A and test operated at the factory. Filters, thermostat field interface Terminal Plug (TP1), and all safety controls are furnished and factory installed. The system water inlet and outlet connections shall be an inside-thread NPT composed of either copper or a bronze option. The equipment shall contain ETL-US-C, and AHRI-ISO 13256-1 listings and labels prior to leaving the factory.

Units meet the efficiency standards of the ASHRAE 90.1- standard.

Units 135,000 BTUH and below are certified to ANSI/AHRI/ASHRAE/ISO 13256-1. Units greater than 135,000 BTUH are outside the scope of the program and are rated in accordance with ANSI/AHRI/ASHRAE/ISO 13256-1.

Service and caution area labels shall also be placed on the unit in their appropriate locations.

All units come standard with a 5-year compressor warranty.

Air-to-Refrigerant Coil

Internally finned, 3/8-inch copper tubes mechanically bonded to a configured aluminum plate fin as standard. Coils are leak tested at the factory to ensure the pressure integrity. The coil shall be leak tested to 450 psig and as working pressure up to 650 psig. The tubes are to be completely evacuated of air and correctly charged with proper volume of refrigerant prior to shipment.

The refrigerant coil distributor assembly shall be of orifice style with round copper distributor tubes. The tubes are sized consistently with the capacity of the coil. Suction header is fabricated from rounded copper pipe.

A thermostatic expansion valve is factory selected and installed for a wide range of control.

DDC Controller (Option)

The UC400(B) and ZN524 controller shall utilize factory furnished and mounted DDC controls. The DDC control package shall include a 75 VA transformer, high and low pressure switches, condensate overflow and freeze protection. The controller shall provide random start delay, heating/cooling status, occupied/unoccupied mode, fan status and filter maintenance options.

On the GEH/V product line, the discharge air sensor and leaving water sensor are standard for the ZN524 and UC400(B) controls.

The controller shall be capable of a standalone application, or as applied to a full building automation installation.

With this controller, the unit shall be capable of a hot gas reheat (for dehumidification), boilerless control for electric heat, waterside economizing, and support of variable speed pump control applications.

Deluxe Controls

The deluxe control package has a 50 VA transformer (fused) or 75 VA transformer with circuit breaker, low and high pressure switches, condensate overflow and freeze protection. The controller shall include a lockout function, anti-short cycle compressor protection, random start delay, brown-out protection, low pressure time delay, compressor delay on start and an open relay for pump request. Hot gas reheat or electric heat shall also be provided (option). Three LEDs (light emitting diodes) are included for diagnostics of the equipment.

Cabinet

Unit casing shall be constructed of zinc coated, heavy gauge, galvanized steel.

For 6 to 25 ton units, service to the refrigerant and controls shall be provided through a single access panel at the front of the equipment. Access to the refrigerant and controls for the larger units shall be provided through the front and side access panels.

Panels shall be insulated with either 1/2-inch thick dual density bonded glass fiber or 1/2-inch thick foil-faced glass fiber. Foil faced insulation edges are encapsulated to prevent glass fibers from entering the airstream. The glass fiber insulations have a flame spread of 25 or less and a smoke developed classification of 50 or less per ASTM E-84 and UL 723. The dual density insulation has a minimum rated service air velocity of 3600 feet per minute (FPM) and meets the erosion requirements of UL 181.

Access for inspection and cleaning of the unit drain pan, coils and fan section shall be provided. The unit shall be installed for proper access.

Procedures for proper access inspection and cleaning of the unit shall be included in the maintenance manual.

Hanging Rod Grommets

For 0.5 to 5 tons units, four rubber grommets are enclosed with every GEH* unit. These grommets are to be used in conjunction with unit hanging rods to isolate vibration. Rubber grommets are only factory provided on .5 to 5 tons units. Grommets must be ordered separately for 6 to 15 tons GEH units.

Compressor

The unit will contain a high efficiency rotary or scroll compressor. External vibration isolation shall be provided by rubber mounting devices located underneath the mounting base of the compressor. On 0.5 to 5 tons units, a second isolation of the refrigeration assembly shall be supported under the compressor mounting base.

Internal thermal overload protection shall be provided. Protection against excessive discharge pressure is provided by means of a high pressure switch. Protection against a loss of charge is provided by a low pressure safety.

Polymer Drain Pan

The condensate pan shall be constructed of corrosion resistant material and insulated to prevent sweating. The bottom of the drain pan shall be sloped on two planes which pitches the condensate to the drain connection. The drain pan shall be flame rated per UL94–5V-B. A UL508 float switch shall be installed on all units to protect against the overflow of condensate from the drain pan.

Stainless Steel Drain Pan

The stainless steel drain pan and the drain stubout shall be constructed of heavy gauge type 304 stainless steel. The bottom of the drain pan shall be sloped on two planes which pitches the condensate to the drain connection. The stainless steel material shall meet the requirements of ASTM A480/A480M and comply with the chemical composition requirements of ASTM A240. The drain pan shall be insulated to prevent moisture accumulation on the drain pan material. The drain pan insulation material shall be suitable to be used in the airflow and consists of closed cell elastomeric insulation, complying with flammability requirements of UL94-5V.

Economizing Coil

The waterside economizing package shall be an external unit accessory pre-piped and pre-wired ready for turn-key installation to the unit. The economizing coil shall be designed to perform with the WSHP at unit measured flow rate of 80°F DB/67°F WB with 45°F EWT. The working water pressure of the waterside economizer coil is 400 psi.

All hydronic coils are of 3/8 in. copper and aluminum plate fin combination. All coils shall be proof and leak tested. The proof test shall be performed at 1.5 times the maximum operating pressure and the leak test at the maximum operating pressure.

A dual sloped noncorrosive drain pan is easily accessible and cleanable for the hydronic economizing coil.

An electronic two-position, 3-way valve shall provide water flow to the economizing coil during the economizing mode. It is factory set to energize the economizing mode at 55°F, while simultaneously halting mechanical operation of the compressor.

For 0.5 to 5 tons units, hanging brackets with rubber isolation shall be provided for the horizontal version of the economizing coil option. The bracket design shall be the same throughout the equipment.

Electrical

The unit control box shall contain all necessary devices to allow heating and cooling operation to occur from a remote wall thermostat. These devices are as follows:

- 24 Vac energy limiting class II [50 VA (minimum) transformer applicable to 0.5 to 5 ton units.
- 24 Vac blower motor relay
- 24 Vac compressor contactor for compressor control
- Field thermostat connections shall be provided for ease of hook-up to terminal locations located in the unit's control box.
- Lockout function controls excessive cycling of the compressor shall be provided to protect the compressor during adverse operating conditions. The device may be reset by interrupting power to the 24 Vac control circuit. Reset may be done either at a remote thermostat or through a momentary main power interruption for units with thermostat controls. For units with DDC controls, the reset can be reset at the zone sensor (with an off switch) or a service tool.
- A high pressure switch shall protect the compressor against operation at refrigerant system pressures exceeding 650 psig.
- Factory installed wire harness shall be available for the Deluxe, ZN524 and UC400(B) control packages.

Nameplate information shall provide MOP ratings for branch circuit protection from the primary source of power.

Electric Heat (Option)

For 0.5 to 5 tons horizontal units, internal boilerless control electric heat shall be factory wired and tested. It shall be composed of a nichrome open wire coil designed for 2-kW per unit ton. The design consists of a single stage of electric heat used as a primary heating source when compressor lockout has occurred due to the entering water temperature falling below 55°F with an adjustable range between 25°F to 60°F. The electric heat option is not intended for secondary heat. All power connections to the electric heat shall be made in the equipment's control box.

External boilerless electric heat control option is composed of a control interface for a field provided electric heat. The heater is placed external to the unit by the installer. Power connection to the electric heat is separate from the unit.

Filters

One-inch or two-inch, throwaway filters are standard and factory installed. Two-inch MERV 8 or 13 filters are also available as an option. The filters have an average arrestance of 75% and dust holding capacity of 26-grams per square foot.

Hot Gas Reheat (Option)

Dehumidification is provided through a hot gas reheat option. Hot gas reheat is enabled when the space humidity level is above a user-selectable setpoint. When hot gas reheat is enabled, the fan speed is reduced to enhance the dehumidification effect. The coil consists of 3/8" copper tubes mechanically expanded into evenly spaced aluminum fins. All coils are leak tested to 450 PSIG and pressure tested to 650 PSIG at the factory..

Indoor Fan

0.5 to 5 Tons Horizontal

The blower is a forward-curved style wheel with multiple speed combinations available. All direct drive motors have sealed bearings that do not require field lubrication. For horizontal units, the motor has a permanent split capacitor with thermal overload protection. Options of standard static or high static can

be selected. For vertical units, an internally protected electronically commutated motor is provided. The motor contains a quick disconnect plug. They are constructed of corrosion resistant galvanized material. Removal of the motor and fan wheel can be made with the assistance of a factory provided orifice ring device. This device attaches the wheel and motor to the fan housing in a single assembly eliminating the need for access to the set screw on the backside of the fan hub.

0.5 to 5 Tons Vertical

The motor is an ECM variable speed motor with overload protection. The ECM motor is programmed to provide soft starting and a constant torque over a range of static pressures and airflows. For the ZN524 and Deluxe Basic control options, an ECM control board is provided that allows easy field adjustment to manually set the fan speed to meet the specific application. For the UC400B, Tracer TU must be used to set the fan speed.

The fans is placed in a draw-through configuration and shall be a centrifugal, direct drive type. They are constructed of corrosion resistant galvanized material. Removal of the motor and fan wheel is made possible utilizing the factory provided orifice ring.

6 to 25 Tons

The blower has multiple blower motor/sheave combinations available. Options of the blower motor/fan packages are selected and wired from the factory to match performance criteria suggested in the performance section. The fan(s) is placed in a draw-through configuration. They are constructed of corrosion resistant galvanized material. All 6 to 25 ton units are belt drive.

Single Point Power Connection

Single point power connection allows a convenient location to bring in the power supply to the unit. The one single power source powers the entire unit including the controls, compressor, blower motor, and all installed options.

Dual Point Power Connection

Dual point power is required to power the medium and large electric heater options while the heat pump has its own separate power connection. It can also be used for the low electric heat option.

Dual point power is not to be confused with the fan motor having its own power supply from the compressor circuit.

ON/OFF Switch (Option)

The switch is mounted on the left hand front corner of the unit and shall be sized per requirements of UL1995 to handle the unit load. The field power connections shall be made at the ON/OFF switch when this option is ordered. The switch shall be mounted on a NEMA compliant junction box. The junction box shall be UL 514 compliant. The junction box shall have knock outs on all four sides to provide access for field wiring to the switch. The switch shall be UL508 compliant and the body shall be constructed of glass reinforced thermoplastic.

Pump Module (Field Installed Accessory)

The pump module shall consist of either a single or dual 1/6 HP cast iron pump and a brass 3-way shut-off valve. The pump module kits shall contain the necessary components for the installation, operation and maintenance of the water circuit of a closed-loop distributed pumping application.

Refrigerant Circuits

The refrigerant circuit shall contain a thermal expansion device. Service pressure ports shall be factory supplied on the high and low pressure sides for easy refrigerant pressure or temperature testing. Filter driers are standard.

Unit Mounted Disconnect (0.5 to 5T Vertical Option)

Disconnect Switch is unit-mounted and easily accessed from the front of the unit. The disconnect switch can be locked in the off position with one padlock. The disconnect switch is UL508 listed.

Refrigerant Tubing

The refrigerant tubing shall be of 99% pure copper. This system shall be free from contaminants and conditions such as drilling fragments, dirt and oil. All water lines that are located in the indoor air stream shall be insulated with 3/8 inch thick elastomeric insulation. The refrigerant lines that are located in the indoor air stream that are not directly over the drain pan area shall be insulated with 3/8 inch thick elastomeric insulation.

Reversing Valve

The reversing valve is a pilot operating sliding piston type with replaceable encapsulated magnetic coil. This valve is energized in cooling.

Sound Attenuation

Sound attenuation shall be applied as a standard feature in the product design. For 0.5 to 5 ton units, the sound reduction package shall include vibration isolation to the compressor and water-to-refrigerant coil, unit base stiffeners, insulated metal compressor enclosure, and a second stage of vibration isolation to the compressor and water-to-refrigerant base pan. The unit is tested and rated in accordance with AHRI 260.

Water-to-Refrigerant Heat Exchanger

The water-to-refrigerant heat exchanger shall be of a high quality co-axial coil for maximum heat transfer. The copper or optional cupro-nickel coil shall be deeply fluted to enhance heat transfer and minimize fouling and scaling. The coil has a working pressure of 400 psig on the water side and 650 psig on the refrigerant side. The factory shall provide rubber isolation to the heat exchanging device to enhance sound attenuation.

Water-to-Refrigerant Heat Exchanger and Suction Lines - Insulated Option

The water-to-refrigerant heat exchanger(s), water lines, and refrigerant suction lines shall be insulated to prevent condensation at low temperatures below 60° F. This can be added to the existing water-to refrigerant heat exchanger spec when the insulated option is selected. This would be both for the copper or optional cupro-nickel coil.

Factory Mounted Isolation Valve (Option)

The two-position valve is factory installed and wired and will open on a call for heating or cooling and close when there is no call for heating or cooling. The isolation valve has a working pressure of 360 PSIG for the 1/2" and 3/4" valves. The 1" valve has a working pressure of 600 PSIG.

Supply and Return Hoses

One-half inch to 1 1/4 inch hose assemblies are fire retardant coated stainless steel outer braid and a thermoplastic rubber tube with a UL94-VO rating. 1 1/2 inch - 2 1/2 inch hose assemblies are a thermoplastic rubber tube. Each assembly has a rigid outside-thread NPT on one end and a JIC swivel coupling with a JIC to outside-thread NPT adapter on the other end. Working pressure is 300 PSI for 1/2 inch - 1 1/4 inch, 200 PSI for 1 1/2 inch, and 150 PSI for 2 inch" - 2 1/2 inch with a minimum burst pressure four times the working pressure. Temperature range for the hose is -40° F[C] to +190° F. All outside-thread pipe threads are shipped with thread sealant already applied, capped, and ready for installation.

Ball Valves

Each ball valve kit consists of two equally sized ball valves. During system balancing, ball valves may be opened or closed to allow more or less water to enter the heat pump. Valves can be used as shut-off for servicing.

Return Air Duct Panel (Accessory)

Return Air Duct Panel is a top and bottom flange to allow connection of return air duct and is field installed. The return air flange does not allow for a fully sealed application. It is adjustable for one-inch or two-inch filters.

Two-inch or Four–inch Ducted Filter Rack (Accessory)

The ducted filter rack is field mounted for the use of 2– or 4–inch filters and provides easy access to the filters from the side of the filter rack through a door that does not require a tool. Duct collars are built into the filter rack to provide an easy means to connect the duct work to the unit.

The AHRI Certified mark indicates Trane U.S. Inc. participation in the AHRI Certification program. For verification of individual certified products, go to ahridirectory.org.

Trane - by Trane Technologies (NYSE: TT), a global innovator - creates comfortable, energy efficient indoor environments for commercial and residential applications. For more information, please visit trane. com or tranetechnologies.com.

Trane has a policy of continuous product and product data improvements and reserves the right to change design and specifications without notice. We are committed to using environmentally conscious print practices.

WSHP-PRC017U-EN 04 Jun 2022
Supersedes WSHP-PRC017T-EN (January 2022)

©2022 Trane